NFPA 70®-2020, 2023 and 2026 Editions
National Electrical Code®
TIA Log No.: 1956
Reference: 705.102(new); 2026 ed-Table A.1(3), 2023 ed-Table A.1(b), and 2020 ed-Annex A table
Comment Closing Date: November 20, 2026
Submitter: Achim Ginsberg-Klemmt, GismoPower, LLC
www.nfpa.org/70

1. Add a new 705.102 to read as follows:

705.102 Utility Notification for Cord-and-Plug-Connected Power Production Sources.
(A) Non-Export Systems. An electric power production source connected by means of a cord and plug connection and equipped with a listed inverter or power control system evaluated to prevent the export of electric power to the electric utility system shall not be required to obtain a utility interconnection agreement as a condition of compliance with this code.
(B) Export-Capable Systems. An electric power production source connected by means of a cord and plug connection that is capable of exporting electric power to the electric utility system shall provide notification to the serving electric utility complying with the following not later than 30 days after initial connection:
(1) Such notification is not required as a condition of connection under this code.
(2) The form and content of the notification is determined by the serving electric utility.
(3) Where the serving utility has not established a process for receiving such notification, written notice delivered to the utility's published business contact, or documented attempted delivery of such notice, is deemed to satisfy this requirement.
Informational Note No. 1: See UL 1741, *Standard for Inverters, Converters, Controllers and Interconnection System Equipment for Use with Distributed Energy Resources*, and UL 3141, *Power Control Systems*, for requirements applicable to inverters and power control systems, including anti-islanding protection and the prevention or control of power export.
Informational Note No. 2: The notification required by 705.102(B) does not constitute an endorsement of any particular utility interconnection policy, tariff structure, or approval process.

2. In the 2026 edition, add to Table A.1(3), the following:

Article	Standard Number	Standard Title
750	UL 1741, third edition	Inverters, Converters, Controllers and Interconnection System Equipment for Use with Distributed Energy Resources
	UL 3141, second edition	Power Control Systems

3. In the 2023 edition, add to Table A.1(b), the following:

Article	Standard Number	Standard Title
750	UL 1741	Inverters, Converters, Controllers and Interconnection System Equipment for Use with Distributed Energy Resources
	UL 3141	Power Control Systems

4. In the 2020 edition, add to Annex A table, the following:

Article	Standard Number	Standard Title

750	UL 1741	Inverters, Converters, Controllers and Interconnection System Equipment for Use with Distributed Energy Resources
	UL 3141	Power Control Systems

Substantiation: No definition of a Plug-In Photovoltaic (PIPV) system exists anywhere in the 2020, 2023 & 2026 NEC, not in Article 100, not in Articles 690 or 705, and not by reference in any other provision. Authorities Having Jurisdiction have no recognized category to cite on permit documentation. Inspectors evaluating these installations must improvise. Utilities processing interconnection requests have no code-defined product type to assess against. An implicit inclusion that cannot be formally cited is, in practice, no inclusion at all.

PIPV systems are a distinct and rapidly growing class of equipment already governed by international standards, including DIN VDE V 0126-95:2025-12 and VDE-AR-N 4105:2026-03 in Germany, with parallel frameworks under active development in the United Kingdom under BS 7671. Approximately four million plug-in solar systems are installed in Germany alone. The United States has no equivalent provision of any kind through the NEC.

The MEGA® (Mobile Electricity Generating Appliance), manufactured by GismoPower LLC, is a patented, medium power, 240-volt split-phase, plug-in mobile solar canopy appliance (U.S. Patents: 11,515,833 B1, 12,040,737, 12,231,083, 18,750,705, 19,350,425 and US 19,391,301 B2).

GismoPower's MEGA® (Mobile Electricity Generating Appliance) is a patented 6.4 kW, 240V split-phase plug-in solar carport appliance. UL Solutions conducted a preliminary investigation (Project No. 4790844670) confirming the MEGA®'s technical viability and issued a Letter of Commitment for certification. The MEGA® 's certification record demonstrates the consequences of the Code's silence directly. Both Intertek and the Florida Solar Energy Center issued approvals for the MEGA®'s grid connection through a NEMA 14-50 receptacle, and both subsequently reversed those approvals through written certification denials. The product did not change between approval and denial; what changed was each body's assessment of whether a cord-and-plug connection can be evaluated for conformity at all under a Code that contains no provision recognizing it. When two independent certification bodies each approve and then retract approval of identical equipment, the instability lies not in the product but in the absence of any Article 705 pathway against which conformity can be measured. Every evaluation of a cord-and-plug power production source is currently an exercise in interpreting silence, and interpretations of silence do not hold.

GismoPower has received the first-ever U.S. utility plug-in solar permits and utility interconnection approvals, in Las Vegas, Nevada and in Pine Ridge, South Dakota. These deployments are serving residential households and operate under DOE SBIR Grant DE-SC0022708 with performance validation and standards development collaboration under PNNL CRADA 747. These installations obtained permits and utility interconnection approvals despite the absence of any NEC-defined product category, because the AHJs and utilities involved recognized that the equipment met applicable safety requirements even though the NEC provided no framework to evaluate it. That outcome, code-compliant equipment permitted through ad hoc accommodation rather than established code provisions is precisely the condition a clear definition in the NEC is designed to prevent.

No NEC provision addresses utility notification requirements specific to cord-and-plug-connected power production sources. In the absence of Code guidance, electric utilities impose full interconnection agreement requirements on all plug-in systems, including listed non-export appliances equipped with inverters or power control systems evaluated to prevent export and therefore physically incapable of delivering power to the grid. This creates a de facto prohibition on listed, safety-certified equipment that poses no grid interaction risk.

The proposed provision draws a regulatory distinction between non-export systems (which present no grid interaction hazard and should not require interconnection agreements) and export-capable systems (which should provide post-connection notification). This tiered approach is consistent with regulatory frameworks in multiple international jurisdictions for plug-in solar systems below defined capacity thresholds.

Subsection (A) states the export-prevention requirement functionally, by reference to listed equipment evaluated to prevent export, rather than by naming a closed list of product standards in mandatory text. This follows established NEC drafting practice: the Code requirement identifies the safety function, and the informational note directs users to the standards under which that function is evaluated, presently UL 1741 and UL 3141. Functional language remains accurate as product standards are revised, consolidated, or superseded, and leaves the determination of which listings satisfy the function where it belongs, with the listing bodies and the authority having jurisdiction.

The final sentence of subsection (B), added following a national laboratory technical review, addresses a practical gap: many utilities have established no process for receiving a notification that is not an interconnection application. Without this provision, a homeowner attempting in good faith to comply with the notification requirement could be rendered noncompliant by the utility's own absence of an intake mechanism. The deemed-satisfied provision preserves the notification record while ensuring that compliance does not depend on administrative machinery outside the installer's control.

Emergency Nature: The standard contains an error or an omission that was overlooked during the regular revision process. The proposed TIA intends to offer to the public a benefit that would lessen a recognized (known) hazard or ameliorate a continuing dangerous condition or situation. The proposed TIA intends to correct a circumstance in which the revised NFPA Standard has resulted in an adverse impact on a product or method that was inadvertently overlooked in the total revision process or was without adequate technical (safety) justification of the action.

The emergency arises from a structural convergence that did not exist when Article 705 was last revised:

1. The product class now exists and is selling. Plug-in photovoltaic (PIPV) kits are being sold by the thousands through online marketplaces and direct-to-consumer channels in the United States. On December 11, 2025, UL published UL 3700, Edition 1, the Outline of Investigation for Interactive Plug-In Photovoltaic (PIPV) Equipment and Systems. UL Solutions announced its corresponding plug-in solar certification program in January 2026. The equipment-level safety framework therefore now exists, but the NEC contains no corresponding installation pathway, no defined term, and no recognized connection method. The certified product class is no longer

prospective: on July 15, 2026, Hoymiles announced the HiFlow Pro, which the manufacturer identifies as the first plug-in microinverter certified to UL 3700 and offered in the United States market. A certified product now exists on the market, and there is still no NEC pathway through which its compliant installation can be permitted. The product standard and the installation Code are out of sync.

2. States are legalizing PIPV faster than the Code can accommodate it. At least 24 states are considering legislation in 2026 to authorize plug-in solar, with more than 30 states having introduced such legislation in 2025 and 2026. Utah enacted the first dedicated law (HB 340) in March 2025, and Virginia followed in March 2026. As each state authorizes PIPV, installations begin, but no NEC pathway exists to permit them through code-compliant means.

3. Automated permitting cannot permit what the Code does not define. This is the core of the emergency. Automated permitting platforms such as SolarAPP+ and AI-based platforms such as Symbium parse the adopted edition of the NEC and check each application against code-defined categories. SolarAPP+ is now deployed across more than 300 jurisdictions in 17 states and is being adopted by new jurisdictions each week, including more than 200 Colorado jurisdictions added through the state Department of Regulatory Agencies in October 2025. A system class that does not exist in the adopted Code cannot be represented in the permitting logic of these platforms. The result is not a slower permit; it is the structural impossibility of obtaining a compliant permit through the channel that is rapidly becoming the default. As jurisdictions migrate to automated permitting, they remove the discretionary human pathway (an AHJ exercising engineering judgment under 90.4) that is presently the only route by which a PIPV system can be permitted at all. The safe, compliant pathway is therefore contracting at precisely the moment the product class is expanding. The electronic permitting, inspection, and interconnection model that these automated platforms now execute is not new: it was specified for plug-in photovoltaic systems under U.S. Department of Energy SunShot funding in 2016, complete with a standardized data protocol, an electronic self-test verifying that regulatory approvals had been granted, and a commissioning sequence that blocked sustained power export until approval was received (Kromer and Hoepfner, 2016, Sections 2.4 through 3). The automated permitting future was foreseen and federally funded a decade ago; what remains missing is the National Electrical Code category that allows these platforms to recognize and approve a plug-in photovoltaic system at all.

The convergence is the emergency: certified products are reaching the market, states are authorizing them, and automated permitting is foreclosing the last discretionary pathway, all while the NEC provides no category through which a PIPV system can be lawfully permitted. This trajectory was foreseeable. GismoPower advised NFPA of it directly at the NEC Second Draft meetings held in Torrance, California in October 2024. It is now materializing.

This TIA satisfies the following criteria under NFPA Regulations §5.4:

§5.4(a) Omission: o provision addresses utility notification for cord-and-plug sources. Utilities fill this gap by imposing interconnection requirements designed for permanently installed systems, creating barriers without technical justification for non-export equipment.

§5.4(d) Public benefit: A tiered notification framework channels installations toward listed equipment and provides utilities with information about export-capable systems, while removing

barriers for non-export appliances that pose no grid interaction risk.

§5.4(f) Adverse impact: Listed non-export products face the same interconnection requirements as permanently installed, export-capable systems. This disproportionate treatment adversely impacts the PIPV product class without technical justification.

Anyone may submit a comment by the closing date indicated above. Please identify the TIA number, state whether you SUPPORT or OPPOSE the TIA along with your comment, and forward to the Secretary, Standards Council. SUBMIT A COMMENT

United States of America

To Promote the Progress of Science and Useful Arts

The Director

of the United States Patent and Trademark Office has received an application for a patent for a new and useful invention. The title and description of the invention are enclosed. The requirements of law have been complied with, and it has been determined that a patent on the invention shall be granted under the law.

Therefore, this United States

Patent

grants to the person(s) having title to this patent the right to exclude others from making, using, offering for sale, or selling the invention throughout the United States of America or importing the invention into the United States of America, and if the invention is a process, of the right to exclude others from using, offering for sale or selling throughout the United States of America, products made by that process, for the term set forth in 35 U.S.C. 154(a)(2) or (c)(1), subject to the payment of maintenance fees as provided by 35 U.S.C. 41(b). See the Maintenance Fee Notice on the inside of the cover.

Katherine Kelly Vidal

DIRECTOR OF THE UNITED STATES PATENT AND TRADEMARK OFFICE

US011515833B1

(12) **United States Patent**
Ginsberg-Klemmt et al.

(10) **Patent No.: US 11,515,833 B1**
(45) **Date of Patent: Nov. 29, 2022**

(54) **PORTABLE SOLAR CARPORT SYSTEM**

(71) Applicants: **Antonia Ginsberg-Klemmt**, Sarasota, FL (US); **Achim Ginsberg-Klemmt**, Sarasota, FL (US)

(72) Inventors: **Antonia Ginsberg-Klemmt**, Sarasota, FL (US); **Achim Ginsberg-Klemmt**, Sarasota, FL (US)

(*) Notice: Subject to any disclaimer, the term of this patent is extended or adjusted under 35 U.S.C. 154(b) by 0 days.

(21) Appl. No.: **17/326,687**

(22) Filed: **May 21, 2021**

(51) **Int. Cl.**

H01L 31/044	(2014.01)
H02S 30/10	(2014.01)
H02S 10/40	(2014.01)
H02S 20/30	(2014.01)
E04H 6/02	(2006.01)

(52) **U.S. Cl.**
CPC ***H02S 30/10*** (2014.12); ***E04H 6/025*** (2013.01); ***H02S 10/40*** (2014.12); ***H02S 20/30*** (2014.12)

(58) **Field of Classification Search**
CPC H01L 31/00–078; Y02E 10/50–60; E04H 6/025; H02S 20/00–32; H02S 30/00–20
See application file for complete search history.

(56) **References Cited**

U.S. PATENT DOCUMENTS

2011/0094569	A1*	4/2011	Hartley	H02S 20/10 136/251
2013/0174889	A1	7/2013	Dalland et al.	
2013/0229141	A1*	9/2013	Johnson	G06Q 10/06315 29/897.3

FOREIGN PATENT DOCUMENTS

BE	3798389	*	3/2021
CN	105971331	*	9/2016
CN	105971331	A1	9/2016
CN	106703465	*	4/2019
CN	106703465	A	4/2019
DE	202012102049	*	7/2012
DE	202012102049	U1	7/2012
EP	3798389	A1	3/2021
JP	3205188	*	7/2016
JP	320151888	U	7/2016
WO	2017030516	A1	2/2017
WO	WO2017030516	*	2/2017

OTHER PUBLICATIONS

CN106703465 English translation (Year: 2019).*
JP3205188 English translation (Year: 2016).*
CN105971331 English translation (Year: 2016).*
DE202012102049 (Year: 2012).*

* cited by examiner

Primary Examiner — Bach T Dinh
(74) *Attorney, Agent, or Firm* — Donald R. Boys; Central Coast Patent Agency LLC

(57) **ABSTRACT**

A solar carport system has a framework comprising metal tubing and connection fittings, the framework having a length, a width and a height and rectangular faces on top, ends and sides, a plurality of wheel assemblies at a lowermost location on the framework, enabling the framework to be moved on the wheels on a supporting surface, a plurality of solar panels assembled to the framework in the top rectangular face, such that an active surface of each solar panel faces upward, and circuitry and wiring connecting the solar panels to a cable ending in a connector compatible with and connected to an inverter.

10 Claims, 12 Drawing Sheets

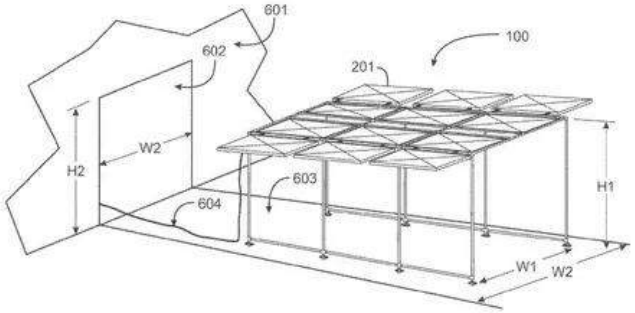

United States of America

To Promote the Progress of Science and Useful Arts

The Director

of the United States Patent and Trademark Office has received an application for a patent for a new and useful invention. The title and description of the invention are enclosed. The requirements of law have been complied with, and it has been determined that a patent on the invention shall be granted under the law.

Therefore, this United States

Patent

grants to the person(s) having title to this patent the right to exclude others from making, using, offering for sale, or selling the invention throughout the United States of America or importing the invention into the United States of America, and if the invention is a process, of the right to exclude others from using, offering for sale or selling throughout the United States of America, products made by that process, for the term set forth in 35 U.S.C. 154(a)(2) or (c)(1), subject to the payment of maintenance fees as provided by 35 U.S.C. 41(b). See the Maintenance Fee Notice on the inside of the cover.

Katherine Kelly Vidal

DIRECTOR OF THE UNITED STATES PATENT AND TRADEMARK OFFICE

US012040737B2

(12) **United States Patent**
Ginsberg-Klemmt et al.

(10) **Patent No.: US 12,040,737 B2**
(45) **Date of Patent: Jul. 16, 2024**

(54) **ELECTRICITY GENERATING CARPORT APPLIANCE**

(71) Applicants: **Antonia Ginsberg-Klemmt**, Sarasota, FL (US); **Achim Ginsberg-Klemmt**, Sarasota, FL (US)

(72) Inventors: **Antonia Ginsberg-Klemmt**, Sarasota, FL (US); **Achim Ginsberg-Klemmt**, Sarasota, FL (US)

(*) Notice: Subject to any disclaimer, the term of this patent is extended or adjusted under 35 U.S.C. 154(b) by 153 days.

(21) Appl. No.: **17/981,065**

(22) Filed: **Nov. 4, 2022**

(65) **Prior Publication Data**

US 2023/0053934 A1 Feb. 23, 2023

Related U.S. Application Data

(63) Continuation-in-part of application No. 17/326,687, filed on May 21, 2021, now Pat. No. 11,515,833.

(51) **Int. Cl.**
H02S 20/23 (2014.01)
H02S 40/32 (2014.01)

(52) **U.S. Cl.**
CPC ***H02S 20/23*** (2014.12); ***H02S 40/32*** (2014.12)

(58) **Field of Classification Search**
CPC H02S 20/00–32; H02S 30/00–20; E04H 6/02; E04H 6/025; E04H 6/04
USPC 136/243–265
See application file for complete search history.

(56) **References Cited**

U.S. PATENT DOCUMENTS

6,279,289	B1	8/2001	Soder et al.
9,281,777	B1	3/2016	Borgstrom
11,515,833	B1	11/2022	Ginsberg-Klemmt et al.
2017/0284117	A1	10/2017	Volin

FOREIGN PATENT DOCUMENTS

AT	514642	A1 *	2/2015	..... E04H 6/025
WO	WO-2017030516	A1 *	2/2017	

OTHER PUBLICATIONS

AT-514642-A1 English (Year: 2015).*

Ginsberg-Klemmt, Erika, "GismoPower's MEGA for the "Go!" Final of the American Made Solar Prize Cohort 5 Hardware Track", Aug. 25, 2022, retrieved from internet Sep. 1, 2023, URL: http://www.youtube.com/watch?v=CTMabArvMfk, entire document especially video.

* cited by examiner

Primary Examiner — Bach T Dinh
(74) *Attorney, Agent, or Firm* — Donald R. Boys; Central Coast Patent Agency LLC

(57) **ABSTRACT**

A mobile, electricity generating carport appliance with removable caster wheels and optional ground anchors has a framework with corner posts and a rectangular top, a base plate lying flat on a support surface with the corner posts joined securely to the baseplate, solar panels mounted to the top of the framework, a plurality of solar panels hinged along sides of the framework, one solar panel hinged along a top edge of each end of the framework, support apparatus hinged to posts on each side of the framework, adapted to support the plurality of solar panels hinged on each side of the framework, support apparatus hinged to posts on each end of the framework, adapted to support the one solar panel hinged on each end of the framework, and circuitry and wiring connecting the solar panels to a cable ending in a connector compatible with and connected to an inverter.

18 Claims, 20 Drawing Sheets

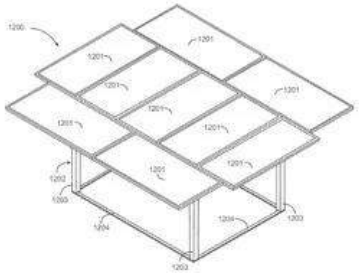

United States of America

To Promote the Progress of Science and Useful Arts

The Director

of the United States Patent and Trademark Office has received an application for a patent for a new and useful invention. The title and description of the invention are enclosed. The requirements of law have been complied with, and it has been determined that a patent on the invention shall be granted under the law.

Therefore, this United States

Patent

grants to the person(s) having title to this patent the right to exclude others from making, using, offering for sale, or selling the invention throughout the United States of America or importing the invention into the United States of America, and if the invention is a process, of the right to exclude others from using, offering for sale or selling throughout the United States of America, products made by that process, for the term set forth in 35 U.S.C. 154(a)(2) or (c)(1), subject to the payment of maintenance fees as provided by 35 U.S.C. 41(b). See the Maintenance Fee Notice on the inside of the cover.

Katherine Kelly Vidal

DIRECTOR OF THE UNITED STATES PATENT AND TRADEMARK OFFICE

US012231083B2

(12) **United States Patent**
Ginsberg-Klemmt et al.

(10) **Patent No.: US 12,231,083 B2**
(45) **Date of Patent: Feb. 18, 2025**

(54) **LOW-COST, SOLAR-POWERED NANOGRID**

(71) Applicants: **Antonia Ginsberg-Klemmt**, Sarasota, FL (US); **Achim Ginsberg-Klemmt**, Sarasota, FL (US); **Eric Bryant Cummings**, Livermore, CA (US)

(72) Inventors: **Antonia Ginsberg-Klemmt**, Sarasota, FL (US); **Achim Ginsberg-Klemmt**, Sarasota, FL (US); **Eric Bryant Cummings**, Livermore, CA (US)

(*) Notice: Subject to any disclaimer, the term of this patent is extended or adjusted under 35 U.S.C. 154(b) by 74 days.

(21) Appl. No.: **18/348,989**

(22) Filed: **Jul. 7, 2023**

(65) **Prior Publication Data**

US 2023/0370017 A1 Nov. 16, 2023

Related U.S. Application Data

(63) Continuation-in-part of application No. 17/981,065, filed on Nov. 4, 2022, now Pat. No. 12,040,737, (Continued)

(51) **Int. Cl.**

H02S 40/32	(2014.01)
B60L 53/18	(2019.01)
B60L 53/30	(2019.01)
B60L 53/51	(2019.01)
H02J 7/00	(2006.01)
H02J 7/35	(2006.01)
H02S 20/23	(2014.01)
H02S 40/38	(2014.01)

(52) **U.S. Cl.**

CPC ***H02S 40/32*** (2014.12); ***B60L 53/18*** (2019.02); ***B60L 53/30*** (2019.02); ***B60L 53/51*** (2019.02); ***H02J 7/0042*** (2013.01); ***H02J 7/35*** (2013.01); ***H02S 20/23*** (2014.12); ***H02S 40/38*** (2014.12)

(58) **Field of Classification Search**

CPC H01L 31/00-078; Y02E 10/50-60; H02S 20/00-26; H02S 40/30-38

See application file for complete search history.

(56) **References Cited**

U.S. PATENT DOCUMENTS

5,895,981 A	4/1999	Flegel	
11,515,708 B2	11/2022	Cummings	

(Continued)

FOREIGN PATENT DOCUMENTS

AT	514642 A1 *	2/2015	.....	E04H 6/025
CN	108075372 A	5/2018		
WO	WO-2017030516 A1 *	2/2017		

OTHER PUBLICATIONS

AT-514642-A1 English (Year: 2015).*

Primary Examiner — Bach T Dinh

(74) *Attorney, Agent, or Firm* — Donald R. Boys; Central Coast Patent Agengy LLC

(57) **ABSTRACT**

An electrical supply system has a carport appliance with a framework supporting a plurality of PV panels and a system controller having a PV inverter coupled to the PV panels of the carport appliance. The PV inverter is adapted to provide current to charge electrically powered vehicles, and has a regulated bus coupled to electrical apparatus providing surge capacity for the supply system. In one instance the system controller has an AC output to input of a distribution apparatus for a residence or a business.

14 Claims, 50 Drawing Sheets

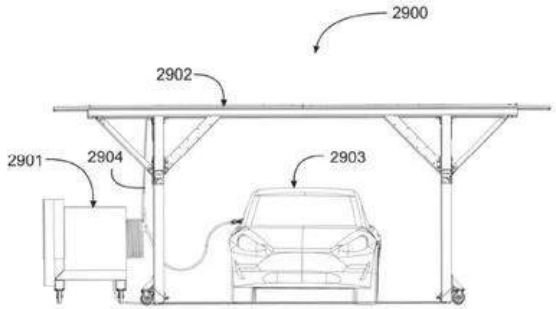

United States of America

To Promote the Progress of Science and Useful Arts

The Director

of the United States Patent and Trademark Office has received an application for a patent for a new and useful invention. The title and description of the invention are enclosed. The requirements of law have been complied with, and it has been determined that a patent on the invention shall be granted under the law.

Therefore, this United States

Patent

grants to the person(s) having title to this patent the right to exclude others from making, using, offering for sale, or selling the invention throughout the United States of America or importing the invention into the United States of America, and if the invention is a process, of the right to exclude others from using, offering for sale or selling throughout the United States of America, products made by that process, for the term set forth in 35 U.S.C. 154(a)(2) or (c)(1), subject to the payment of maintenance fees as provided by 35 U.S.C. 41(b). See the Maintenance Fee Notice on the inside of the cover.

Katherine Kelly Vidal

DIRECTOR OF THE UNITED STATES PATENT AND TRADEMARK OFFICE

US 20240343145A1

(19) **United States**

(12) **Patent Application Publication**

Ginsberg-Klemmt et al.

(10) **Pub. No.: US 2024/0343145 A1**

(43) **Pub. Date: Oct. 17, 2024**

(54) **VEHICULAR ELECTRICITY GENERATING CANOPY APPLIANCE**

(71) Applicants: **Antonia Ginsberg-Klemmt**, Sarasota, FL (US); **Achim Ginsberg-Klemmt**, Sarasota, FL (US); **Eric Bryant Cummings**, Livermore, CA (US)

(72) Inventors: **Antonia Ginsberg-Klemmt**, Sarasota, FL (US); **Achim Ginsberg-Klemmt**, Sarasota, FL (US); **Eric Bryant Cummings**, Livermore, CA (US)

(21) Appl. No.: **18/750,705**

(22) Filed: **Jun. 21, 2024**

Related U.S. Application Data

(63) Continuation-in-part of application No. 18/348,989, filed on Jul. 7, 2023, which is a continuation-in-part of application No. 17/981,065, filed on Nov. 4, 2022, now Pat. No. 12,040,737, which is a continuation-in-part of application No. 17/326,687, filed on May 21, 2021, now Pat. No. 11,515,833.

(60) Provisional application No. 63/359,722, filed on Jul. 8, 2022.

Publication Classification

(51) **Int. Cl.**

B60L 53/51	(2006.01)
H02S 10/40	(2006.01)
H02S 20/30	(2006.01)
H02S 30/10	(2006.01)
H02S 30/20	(2006.01)

(52) **U.S. Cl.**

CPC ***B60L 53/51*** (2019.02); ***H02S 10/40*** (2014.12); ***H02S 20/30*** (2014.12); ***H02S 30/10*** (2014.12); ***H02S 30/20*** (2014.12)

(57) **ABSTRACT**

A vehicular electricity generating canopy appliance includes a rectangular framework forming a vehicular chassis with solar panels, support apparatus for repositioning panels, auxiliary wheels, a trailer dolly for towing, and an electrical system connected to an inverter supporting optional Vehicle to Grid (V2G) operations. The vehicular canopy is designed to be movable and storable to protect the panels during adverse weather conditions.

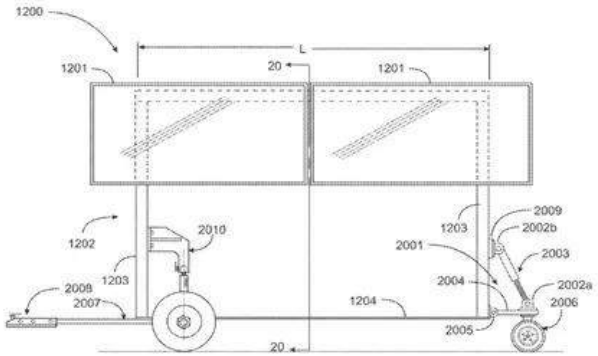

Fig. 20

July 6, 2023

Gismo Power LLC
3364 Tanglewood Dr
Sarasota, FL 34239 USA

Attention: Achim Ginsberg-Klemmt

Reference: Project Number 4790844670

Subject: Preliminary Report – Mobile Electric Generating Appliance

Dear Mr. Ginsberg-Klemmt:

The following letter report is provided to Gismo Power LLC (Gismo) as a result of the preliminary investigation of the Mobile Electric Generating Appliance (MEGA). This letter report will detail our findings for your review. Please note, nothing in this letter report is intended to authorize use of the UL Mark on the product, and any discussion around compliance or noncompliance is simply provided based on our review of documentation provided by Gismo as of the date of this letter report. The content of this letter report is subject to change after a review of the final product.

This preliminary investigation was carried out under the New and Innovative Process (N&I). UL Solutions follows this process whenever a product that is considered a new technology or an innovative use of existing technology is submitted for certification, because existing standards will not properly address the unique aspects of the new or innovative technology. This requires revision of existing requirements or development of new requirements to address the product certification. The N&I investigation is applicable to MEGA as it is not covered by any one set of existing requirements. Requirements from existing standards will be applied where applicable. Where no existing requirements are available, UL Solutions will development new requirements that address this type of product.

The basic approach used in this preliminary investigation was the Hazard Based Safety Engineering (HBSE) approach. The overall safety of any product involves many different factors. The HBSE approach is an approach to identify risks associated with the given product based on its design and intended functionality and use, and then identify how those risks are mitigate within the design of the product. As stated, the HBSE approach was used in reviewing the MEGA. Therefore, if a risk was identified, and the means to mitigate the risk are provided in the product design, a path forward would exist. If a risk was identified but not yet mitigated within the product design, then this would indicate a concern that needs to be addressed. Interaction with Gismo would be needed to identify risk mitigation means and based on the means chosen by Gismo, final requirements can be developed to evaluate the reliability of those mitigation means.

The content of this letter report is intended to provide a summary of any identified risks and where lack of potential mitigation is not provided or not yet clear, and to provide some explanation related to mitigation to allow Gismo to forge a path forward to certification.

PRODUCT DESCRIPTION:

For the record, the MEGA is a free standing, portable PV system that is intended to act as an EV carport with capabilities for EV charging and utility grid interactive inverter power export. The product is grid tied using a power cord that is plugged into any available 240 V receptacle. The grid power will be used to charge the electric vehicle, and the PV generation is used to supplement the grid during the charge event. If the vehicle is not charging, the PV

UL Solutions
333 Pfingsten Road
Northbrook, IL 60062
T +1.847.272.8800

UL LLC © 2022. All rights reserved.

generation can be used for power export as previously mentioned. The product is portable in the fact that it can be moved by engaging the casters and rolling the product to a new location. The product can also be stored indoors, inside a garage or other car port, during inclement weather or while the owner is away from the property. An image of a MEGA as provided by Gismo is shown below.

GENERAL INFORMATION:

The following information is intended to outline the requirements that would pertain to this product to achieve certification. Where compliance can be determined based on available information, this will be indicated. If compliance cannot be determined, information will be provided that will outline the potential hazard, provide some information related to the concern and discuss how this concern needs to be addressed. Based on the fact that this letter report was generated based on available information, the mitigation means may already exist or Gismo may have a solution. In other cases, a mitigation means may need to be developed or implemented.

Additionally, existing text in codes may present a challenge as that text was not written with this product and its unique applications in mind but could easily be applied by the authority having jurisdiction (AHJ) or by any authority at any given time. Where code text may be an issue, this was also indicated. It should be understood that this is not definitive as the AHJ has the final decision on any installation. There are thousands of jurisdictions in the US and each AHJ can approach an installation differently. As UL Solutions cannot speak for the AHJ, we are providing guidance and awareness in addressing these code issues. It will be the responsibility of Gismo to work with the AHJs as needed to gain acceptance of the product if there are questions from AHJs until such time as codes are updated to define portable PV products, such as the MEGA, more clearly.

With reference to code, we will make reference to the National Electrical Code (NEC), the International Residential Code (IRC), and the International Building Code (IBC). With reference to standards, the base standards used as a starting point for this development are UL 1741, the Standard for Inverters, Converters, Controllers and Interconnection System Equipment for Use with Distributed Energy Resources; UL 2202, the Standard for DC Charging Equipment for Electric Vehicles; UL 2594, the Standard for Electric Vehicle Supply Equipment; UL 61730-1, the Standard for Photovoltaic (PV) Module Safety Qualification – Part 1: Requirements for Construction; UL 61730-2, the Standard for Photovoltaic (PV) Module Safety Qualification – Part 2: Requirements for Testing; and UL 2703, the

Standard for Mounting Systems, Mounting Devices, Clamping/Retention Devices, and Ground Lugs for Use with Flat-Plate Photovoltaic Modules and Panels. Reference to any standard will be by number only.

REQUIREMENTS:

The requirements that would be considered applicable to the product are outlined below. This is based on available information and would be subject to change if new information becomes available. Following these requirements is a table. The table will address items that must be addressed to move toward certification in topics 1 - 4. Where requirements can be detailed based on the current information available, we will provide that requirement. Where requirements will depend on input from Gismo, we will indicate that fact. Topic 5 and 6 in the table will address potential concerns or issues that Gismo should be made aware of but are not directly related to certification. The issues in the second table do not require Gismo to provide a mitigation means to UL Solutions, nor are we able to control those aspects of the product, its installation or use. Those items are provided as information to Gismo to assist in understanding potential hurdles toward acceptance of the product.

Requirements will include the following as a minimum. During the actual certification evaluation, the following is subject to change if new information is received.

Metallic Materials: All metallic materials shall be of sufficient strength to perform the given function. For all use case, including assembly, movement, and use, the structures elements shall not bend, deform, break, or loosen. All materials shall be inherently corrosion resistant or provided with a coating to prevent corrosion. All metallic junctions shall include compatible metals such that corrosion is not induced by combining metals with higher resultant electrochemical potentials. See Figure 15.1 of UL 2594.

The structure must also have sufficient strength to withstand abuse. This would include impact from the vehicle as well. Testing will need to be developed to verify strength of materials.

Polymeric Materials: All polymeric materials used for support, enclosures for electrical parts, or operational mechanisms shall be Recognized Component plastics under the category control number (CCN) QMFZ2 is the UL Certification Directory. The material shall be UV resistant and water resistant as indicated by an (f1) rating of the material in accordance with its UL Recognition. When used for support of PV panels, the material shall also carry a suitable Relative Thermal Index (RTI) in accordance with UL 2703, clause 7.4, and shall have the applicable electrical properties in UL 2703, clause 7.2. For other parts, the RTI shall be suitable for the temperatures that are observed in actual use. If not enclosing live electrical parts, there are no requirements for electrical properties. The material shall also have a specific flammability rating of HB minimum unless enclosing live parts that require a fire enclosure, in which case the material shall be rated 5VA in accordance with its UL Recognition.

Mechanical Assembly: The product shall be capable of being used, moved, and stored as intended without having parts or electrical connections loosen or disconnect. Based on the specific design and use cases defined to the user in the instructions, testing may be needed to verify that over time, the product will comply with these requirements.

Supply Connections: The connection to the supply is intended to be a power cord. That power cord shall be suitable rated for the voltage and current involved and shall be suitable for the environment in which it is used. This will include outdoor, wet location ratings, and sufficient temperature ratings. The power cord shall be one that is previously certified under CCN ELBZ.

Electric Vehicle Supply Equipment / Chargers: For electric vehicle supply equipment (EVSE) with an AC output, the correct category is FFWA and for chargers with a DC output, the correct category is FFTG. If a bidirectional product is to be used, the correct category is FFTN.

PV Modules: The PV modules shall comply with the requirements in UL 1703, or UL 61730-1 and UL 61730-2. The means of mounting and bonding the modules shall comply with UL 2703 and shall be appropriate for the PV module used. Interchange of the PV modules will not necessarily mean that the mounting and bonding means is still appropriate for the PV Module. Gismo has indicated a desire to be able to use multiple PV modules, and to have the

ability to upgrade as the modules are advanced. This will need to be reviewed each time to verify that mounting and bonding of the modules is done in a suitable manner.

PV inverter: shall comply with UL 1741 or UL62109 and UL1741. Shall have ratings for the electrical and environmental conditions of use.

Instructions: The MEGA shall be provided with sufficient instructions to inform the user on all aspects of assembly/installation, use, maintenance, and storage of the MEGA product. The instructions shall be provided in printed form with each product. The instructions shall be legible and clearly written. Pictures and drawings are allowed, but they shall not replace the written instruction. Additionally, if the instructions will be used to mitigate a risk as identified in the following table, or simply to identify a risk, then those statements will need to be included. We were not provided any instructions manuals at this time, so a complete review of the manual(s) will be made at the time of the certification evaluation.

Topic 1: Installation

Installation of the MEGA is discussed in the video provided on the Gismo website (Gismopower LLC). In this video, the narration explains that all is needed is to assemble the MEGA and plug it in. This leads to the assumption that the MEGA is delivered unassembled and the owner will be assembling the MEGA on their own. Later in the video, the narration claims that after UL Certification is achieved the MEGA will be ready for direct sale to solar installers, which contradicts the earlier assumption and sounds as if qualified personnel are assembling the MEGA.

The information under this topic in the following rows will detail concerns associated with installation. In some cases, these concerns are based on the assumption that the general public will be installing/assembling the MEGA. If assembly is always done by qualified personnel, then those concerns would be considered mitigated and can be removed.

Item	Potential Hazard	Details	Mitigation Needs
1a	Fire, shock, injury	It is not clear who is installing and assembling the MEGA. If the MEGA is installed by qualified personnel (solar installers, Gismo personnel, etc.), then there is no overall issue from an installation point of view. If this product is installed by the homeowner or renter once the product is purchased, then the concern related to proper and safe installation needs to be addressed. A homeowner or renter will likely not have the necessary training, skills, or knowledge required to recognize and avoid the potential hazards involved with assembling and installing this product correctly. The equipment and components used to build this system can and do operate above voltage and energy levels that can pose a serious and potentially lethal electric shock risk as well as create a fire. PV DC systems can sustain long term high voltage	The traditional mitigation strategy is to require a trained and qualified person to install and maintain the system properly and obtain review oversight and approval from the AHJ and the interconnected utility for the installation. This may be the case and if so, we ask Gismo to confirm. If the homeowner or renter is assembling the product, Gismo can (or may already) provide an appropriate combination of new product safety features to a) prevent exposure to live parts at dangerous voltage levels, b) prevent mis-installation that can cause unforeseen hazards and c) include a detailed set of electrical and structural safety instructions to clearly address the assembly, operation, and maintenance of the MEGA.

		arcing faults if the equipment or systems are improperly assembled.	These instructions will need to mitigate the risks of each potential hazard accounting for an unknowledgeable end user.
1b	Fire, shock	With reference to 1a, the existing safety standards for PV modules, junction boxes, wiring and connectors do not cover hazards related to installation, operation and maintenance by other than qualified persons since that is the traditional method of mitigating the risk. If the homeowner or renter is intended to assemble and install the MEGA, the requirements for these products would not address the shock and fire hazards that may be present to the unqualified person, such as: -Shock hazard due to accessible parts of PV connectors when not mated/interconnected that will be energized when PV is illuminated. -Fire and shock hazard due to opening or interconnecting the mating connectors when PV is illuminated, causing arcing. The presence of an arc creates a shock hazard and if used after an arcing event, can increase the resistance across the connector, creating a fire risk. -Shock or fire hazard due to mechanical damage to or strain on wiring, junction box, or the module due to human activity under or near the carport that could cause arcing, expose energized parts, or compromise the water integrity of the module packaging.	As indicated in 1a, if the assembly and installation is performed by qualified persons, then this is not an issue. If the assembly and installation is performed by the homeowner or renter, then we need to protect the unqualified persons from potential risks. The certified products themselves – PV modules, junction boxes and wiring – are not intended for installation by unqualified persons. Therefore, addition protection means must be added as indicated in 1a.
1c	Shock, fire	Damage to the MEGA or any of its components due to foreseeable misuse or abuse may lead to potential hazards that are not foreseeable or identifiable to the unqualified person. Kids playing in the driveway, sports equipment (basketball, football, baseball, etc.) impacting the MEGA, vehicle impact, etc., may damage equipment or loosen connections thereby creating a potential hazard.	Instructions to the user to maintain and inspect the MEGA may address this depending on what the unqualified person is told to do. Enclosing the parts and protecting them from abuse is another option.

Topic 2: Grounding Connections

Proper grounding us used as one level of protection for the user. Proper ground must be provided and maintained in all use cases of the product. This includes the sizing of all grounding and binding wires, how they care connected (bolted, welded, etc.) to the frame and electrical equipment, and the overall impedance (less than 0.1 ohm) of the ground path when measured from any accessible part to the ground terminal.
If the product is allowed to operate when not plugged in, or if the product cannot be prevented from operating when not plugged in, the potential for the grounding connection to be insufficient exists.
Therefore, a detailed description of how grounding is accomplished and maintained during use of this product will be needed at the time of the certification evaluation.

Item	Potential Hazard	Details	Mitigation Needs
2a	Fire, Shock	Some versions of the MEGA are able to operate in grid export mode and some versions may be able to operate on or off grid (in a multiple mode) condition. When multiple power sources are created within a single facility, it is critical to address the ground and bonding requirements of separately derived systems such that the system does not have more than one Neutral to Ground bond connection for a given system. This single Neutral to Ground bond prevents circulating ground loop currents that can cause overloading of conductors as well as changes in ground potential that could lead to equipment malfunctions and risk of electric shock.	Compliance with the requirements of NEC 250.4 would prevent multiple Neutral-Ground bond connections in the same system. A complete installation manual as well as circuit diagram to assess the grounding configuration(s) of the MEGA will be required as part of the certification evaluation.
2b	Fire, shock	Conductive accessible parts of the support system must be grounded to prevent a shock hazard if they may become energized in a single fault scenario (such as contact between structure and damaged/energized parts of PV module, dc or ac wiring or equipment). This is applicable to the hinged as well as fixed parts of the structure and PV frames if the energized components are at or above hazardous voltage / current levels, which could occur when system is not isolated from the grid, or any time the PV is illuminated. The portable nature of the product could present a hazard in which the PV is illuminated, and therefore live, while the product is moved. The consideration is that the cord will be unplugged at this time and the ground to the product will be lost.	Ensure equipment grounding is maintained even when the product/structure is moved for any reason. Compliance with UL 2703 bonding and grounding requirements* would address this concern as it relates to damaged conductors or grounding path. For the case where the product is moved while the PV is illuminated and the cord is unplugged, a mitigation means is needed to prevent a potentially hazardous condition.

2c	Shock	In relation to 2b, the loss of ground can also adversely affect the electric vehicle supply equipment (EVSE). It is unclear as to whether or not the EVSE can be used to charge a vehicle when the plug is not plugged into the receptacle. If so, the primary protection scheme for EV charging is based on a grounded system of protection for all AC output EVSE. Best case scenario would be that the EVSE shuts down and does not deliver power to the vehicle when the plug is not connected and the PV modules are illuminated. However, there is a potential hazard if the EVSE is allowed to transfer power to a vehicle and the EVSE believes it is grounded when it is not. This will defeat the system of personnel protection required to be in place by the National Electrical Code, NEC 625.22, and as required by UL 2594.	Verification that the EVSE is nonfunctional when the plug of the MEGA is not plugged into the receptacle is needed. If the EVSE is functional, then the risk mitigation associated with an inferior ground connection will need to be reviewed.
Topic 3: Electric Shock The user cannot have access to any hazardous voltage or energy level. The MEGA would have both hazardous voltage and hazardous energy. Therefore, specific protections are required by codes and standards are needed to protect the user from potentially hazardous conditions in both normal operation and abnormal operation (misuse or faults).			
Item	Potential Hazard	Details	Mitigation Needs
3a	Shock and fire	The MEGA is intended to be connected to any existing 240Vac outlet. Connection to an existing outlet can create multiple safety hazards. Existing branch circuits that contain other loads or outlets being used for backfeeding from the MEGA PV would not be in compliance with Article 705 because the loads or outlets would not be protected by a suitably sized CB (705.30(A)) and other equipment in the circuits would be unknown and may not be suitable for backfeed (705.30(D)).	Verification is needed that that the requirements of the National Electrical Code (NEC 705) for interconnecting power supplies to the load side of premise wiring are being followed. Additionally, 705.30(C) is going to require a marking at the circuit breaker that is used for the interconnected power source. That marking could be applied by the MEGA owner, but the marking needs to be provided by Gismo Power. An example is shown below.

3b	Shock	There is a risk of an electric shock from electrical outlets that power cord-connected equipment in wet locations. Receptacles located outdoors are required to be Ground Fault Circuit Interrupter (GFCI) protected receptacles in accordance with the National Electrical Code.	Gismo indicated that the receptacle would be installed by a qualified electrician and approved by the AHJ, therefore GFCI protection is understood to be in place. However, typical GFCI protection is suitable for unidirectional current flow (from grid to load). Grid interactive inverters used in the MEGA will create a bidirectional current flow at the receptacle and current GFCI standards do not address bidirectional current flow. Bidirectional current flow can damage the sense circuits of such GFCI protection. It may be possible to develop new requirements for bidirectional GFCI protection for this application in order to address the connection to any receptacle.
3c	Shock	A tall vehicle roof, vehicle roof rack, or persons under the PV modules could cut into PV back sheets or PV wiring. PV arrays and PV wiring are not evaluated for this type of interaction since typically there is no exposure to the back sheet of a PV module. These hazards can expose live parts operating at high voltages, can cause arcing faults, fire hazards and electric shock hazards for people if they were to contact the exposed parts or come into contact with energized parts of the vehicle.	Parking aids, barriers, warning signs, and warnings in the instructions could help to mitigate the risk of collisions. It may also be possible to develop and implement ground fault circuit interruption electric shock protection for PV array circuits to provide such protection. Other solutions and mitigating means are welcome.
3d	Shock	As previously stated, the National Electrical Code will require a system of personnel protection in 625.22. As part of that system of protection, there is an interrupting device that will open the circuit that transfer power to the vehicle. The code further states that this protection device needs to be located within 12 inches of the receptacle for all cord-and-plug connected EV supply equipment. The interrupting device in the current version of the MEGA would be located within the enclosure of the SolarEdge EV Charging Inverter, therefore the power cord can only be 12 inches in length. The rationale for this is that if there is a fault detected by the protection system and the	The current length of the power cord is unknown, but it assumed to be longer than 12 inches. It is understood that the overall device is not as EV charger but contains an EV charger. However, this does not preclude the use of Article 625 of the National Electrical Code. The issue of cord length could be managed if the cord length was 6 feet or less and the cord was managed not to touch the ground in any use case. Further, the interrupting device could be provided in the plug or within 12 inches of the plug. The current Solar Edge

		interrupting device opens, everything before the point of interruption will remain live. As such, the power cord will remain live. Therefore, the length is limited to 12 inches to prevent damage from contact with the floor, exposure to vehicle fluids, and drive over by the vehicle.	product could be replaced with out that provides that option. Other potential solutions may exist and Gismo is welcome to discuss options.
3e	Shock	If the PV modules are illuminated and the plug is not inserted into a receptacle, the accessible conductive parts of the plug would be energized. A shock hazard would exist if the plug blades are contacted by a user or nearby person.	It is possible to develop evaluation requirements for additional electric shock protection for accessibility of grid interactive inverter output circuits. Gismo may already have systems included that will address this concern. Another possibility may be to provide a touch safe plug and outlet assembly that prevents access to the plug or outlet terminals.

Topic 4: Physical abuse
Different forces on the product could create potential hazards. This should be mitigated by design features. This includes wind forces, weight of snow on panels, impact from vehicles, impact of other objects, or other forces

As the device is considered portable or movable, different forces applied or misuse during movement could also create potential hazards. This includes failure to lock casters that allow unintentional movement from sloped surfaces, wind, or impact, as well as uncontrolled movement under human power.

The physical weight of the MEGA may prevent it from tipping over or being lifted by wind forces. The size may also prevent it from tipping over due to movement by the user. However, this is still something that should be considered. Stability tests tip a product 10 degrees and verify that it will not tip over. This would be applicable to the MEGA.

Further concerns are indicated below.

Item	Potential Hazard	Details	Mitigation Needs
4a	Shock, fire	Due to normal movement of the MEGA, or inadvertent movement as described above, strain could be placed on the power cord at the receptacle or at the connection point to the MEGA structure. Depending on the amount of force applied, damage could occur on the product or on the receptacle. This damage could lead to a shock or fire hazard.	Part of inadvertent movement would be addressed if the casters automatically locked upon final positioning. If the casters require user interaction to lock them, then this it is easily foreseeable that this step would be ignored, and we would not rely on user interaction. Movement due to other forces may already be addressed. If not, prevention of inadvertent movement when plugged in would need to be considered.

Topic 5: Fire Separation Distances

The 2024 International Building Code (IBC) and the 2024 International Residential Code (IRC) will be published soon. With those new publications, there is a new definition for an elevated PV support structure. The MEGA will fall under that definition and as such, all requirements in the 2024 IBC and 2024 IRC that pertain to elevated PV support structures will apply to the MEGA product. One such requirement relates to fire separation distances. This requirement will state that the elevated PV support structure shall be located a specific distance away in order to prevent flame spread from one structure to another. This spacing will be required from garages, houses, or any other structure on the property.

Item	Potential Hazard	Details	Mitigation Needs
5a	Fire	The definition of elevated PV support structure will be as follows: PHOTOVOLTAIC (PV) SUPPORT STRUCTURE, ELEVATED. An independent photovoltaic (PV) panel support structure designed with useable space underneath with minimum clear height of 7 feet 6 inches (2286 mm), intended for secondary use such as providing shade or parking of motor vehicles. This will be a clear definition in the IBC and IRC. This will lead to the following requirement in the International Residential Code: Elevated PV support structures shall be considered a roof for the purposes of establishing the number of stories and fire separation distances.	Use instructions shall be used to inform the user that the MEGA is to be located and used a specific distance from other structures in order to meet this code requirement. The default minimum distance would be 5 feet from other structures and from lot lines.

Topic 6: Unauthorized Use:

There are approximately 3300 utilities in the US. Each one of those utilities could have different rules or a subset or rules that pertain to back-feeding, or power export, to the building wiring system. In many cases, the utility wants to be made aware of the fact that any additional sources are being added. However, UL cannot police the needs of the utilities nor we can document each and every different rule. So, it will be up to Gismo to navigate that landscape. Below are some potential concerns to be aware of.

Item	Potential Hazard	Details	Mitigation Needs
6a	Risk associated with disruption of utility power or loss of	An AHJ(s) may require a permit and approval of the electrical and structural installation (per the IBC and IRC, particularly section 105.2), and if not obtained, the AHJ could disconnect	In lieu of addressing the hazard on a case by case basis, a more reliable and reproducible method of mitigating the concern should be in place. Gismo

	access to residence by order of AHJ	the MEGA system or disrupt power to the facility / site. At the current time, Gismo appears to be working with the local authorities on a case-by-case basis. Over time, if this product is sold in higher quantities or mass produced, the ability to interact on a case-by-case basis may diminish.	could proactively work with AHJs to explore options to obtain a “pre-approval” for the MEGA, i.e. waive traditional requirements for approval on a case-by-case basis. Alternatively, instructions provided with the product could warn the users of the risk of disruption to utility service if approval from the local AHJs or electric utility for an interconnected PV power source is not obtained. Another option would be to pursue a change to section 105.2 in the International Building Code (IBC) and International Residential Code (IRC) to add a portable PV carport to the list of structures not requiring AHJ approval.
6b	Risk associated with disruption of electric utility power to the site/ residence due to disconnection by the utility	Gismo has indicated that the MEGA concept would not include an interconnection agreement with the electrical utility. This may result in electrical service to the residence being disrupted by the local electric utility. Utility providers often have specific rules for connecting parallel power generation sources to backfeed their electric utility. These rules typically require approval by the local utility and AHJ. The local utility service provider could “red tag” a location if they determine that an unauthorized interconnected power source is presen and shut down electric power to the site. An unplanned disruption of power by utility could remove power to critical loads such as heating, air conditioning, medical equipment, etc., which could result in an injury to the residents.	Similar to item 6a: Gismo could proactively work with electric utilities to explore options to obtain a “pre-approval” for the MEGA, i.e. waive traditional requirements for approval on a case-by-case basis. Alternatively, instructions provided with the product could warn the users of the risk of disruption to utility service if approval from the utility for an interconnected PV power source is not obtained.
6c	Risk to utility workers or first responders if unaware of interconnected PV power source.	Electric utilities record installation locations of utility interactive generation connected to their utility grid. Many utilities use this information to implement extra safety protection measures before they start work on the utility distribution equipment and power lines for utility worker safety. Utility workers could be exposed to electric shock hazards if they are unaware of the utility interactive power generation.	Risk to first responders if they were unaware of a connected parallel power source could be addressed through an NEC-compliant dedicated branch circuits intended for connection to the PV inverter output. Gismo could address this with the given utility as mentioned in 6a and 6b, or provide instructions to the user to provide that NEC compliant dedicated branch circuit

			or provide instruction to the user to work with their utility provider.
6d	Potential damage to utility generation and regulation equipment and or neighboring electrical equipment	Electric utilities require oversight and authorization to customers exporting power to their electric grid in order to properly size, protect and maintain the local grid for safe and reliable operation. Utility customers typically sign an agreement with utilities that specifically require utility permission to interconnect ("backfeed") a secondary power source. Violation of the agreement could result in safety risks to utility workers, and/or legal ramifications or disruption of power to other utility power customers. Electric utility interconnection rules tend to be a mix of performance and safety related requirements which vary from utility to utility. While many utilities use similar requirements, there are notable differences, and the inverters need to be programmed to comply with the local utility grid codes. Utility interconnection requirements are typically intended to prevent negative interactions between the grid interactive inverters and utility monitoring and protection equipment that is intended to stabilize and protect the utility grid equipment as well as other power customer load equipment installed on the grid. The below web link includes general information on common contractual Issues for Grid-Connected Systems including the need for $100K liability insurance in case the system does damage to the grid or neighbors. https://www.energy.gov/energysaver/grid-connected-renewable-energy-systems As part of the permitting process with the utility, many utilities require communications-based interoperability control of grid support interactive inverters. While not specifically a traditional product safety hazard, local utilities will consider this as a safety hazard as a considerable increase in uncontrolled grid	See items 6a – 6c.

		interactive products can exceed a utilities ability to properly control and regulate the utility grid voltage and frequency as well as perform accurate fault current calculations. Significant amounts of uncontrolled generation can result in destabilization of the local electric utility grid.	

COMPONENTS:

Within the MEGA, numerous components are used. Each of these components may or may not already be certified. If certified, they may or may not be certified by UL Solutions. This will be a critical knowledge step in determining the path to certification.

Throughout this letter report, reference has been made to previously certified products or materials. The need for previously certified products and materials centers on reliability and future identification. If a product or material is previously certified by UL Solutions, then we have a record of the reliability of the product or material; we have control over its construction so that changes to the component or material cannot unknowingly affect Gismo's design adversely; and we can eliminate Gismo's responsibility in verifying that those components or materials have not changed. To verify that products or materials are previously certified by UL Solutions, the certification directories available at www.ul.com (link following this paragraph) can be used to review previously certified products and materials.

https://www.ul.com/resources/apps/ul-iq-databases

The acceptability of all safety critical components and materials will occur during the certification project. If all UL Solutions certified products and materials are used, then the path to certification is easier. If products or materials certified by other organizations are used, we will need to determine the path forward for certification. This may require annual follow-up testing to verify that nothing has changed in relation to the system we certified.

NEXT STEPS:

Gismo will need to review the content of this letter report and decide what mitigation strategy they wish to employ to address the concerns outlined above. Once the final product and information are ready, we can discuss the steps to certification.

In the meantime, UL Solutions will undertake outreach to our Electrical Council. The electrical council consists of volunteers that include authorities, inspection officials, electricians, and the like, that advise UL Solutions on opportunities to support and further safety. We can discuss this product type with the council members, without details and specifics on the MEGA product, and gain a better understanding on how this product would be perceived within the electrical authority and inspection community. We will report back to you on the outcome of that outreach.

CONCLUSION:

As previously indicated, we are providing this information to you in this letter report as a summary of our findings related to the MEGA product. We would be happy to discuss these findings in more detail as needed. Once Gismo has reviewed this information and it ready to move toward certification, please let us know and we can open a project to perform the certification work.

At that time, Gismo should be prepared to provide a sample, all structural drawings and schematics, a bill of materials for all equipment used in the MEGA, and a copy of the installation and use instructions that will be provided.

If you have any questions or concerns, please feel free to reach out to the undersigned.

Very truly yours,

Tim Zgonena

Tim Zgonena
Principal Engineer
Energy and Industrial Automation

Colleen O'Brien

Colleen O'Brien
Principal Engineer
Energy and Industrial Automation

Scott Picco

Scott Picco
Principal Engineer
Energy and Industrial Automation

Reviewed by:

Joe Bablo

Joe Bablo
Principal Engineering Manager
Energy and Industrial Automation

Appendix A: Graphical example of the need for a dedicated circuit

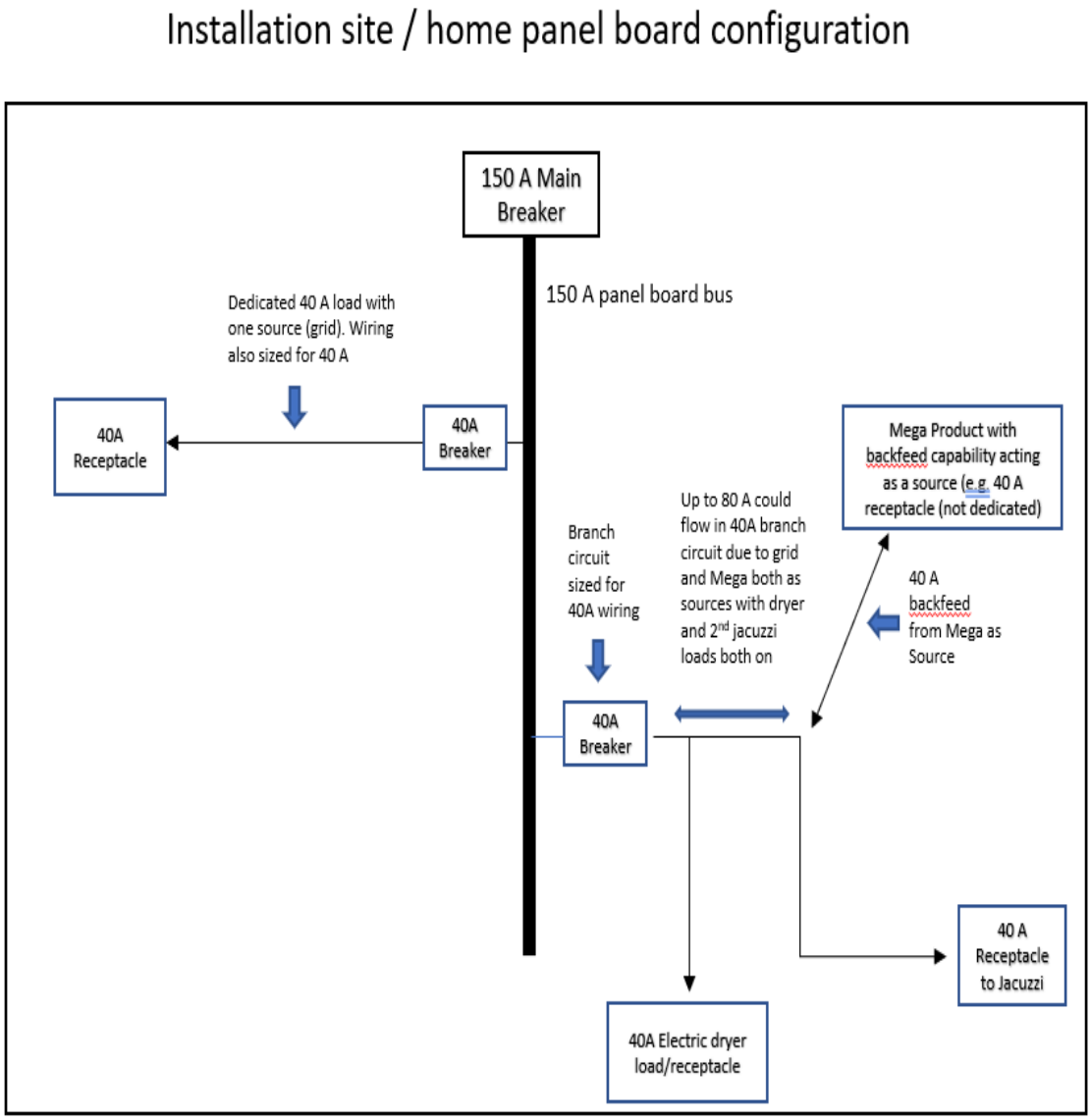

Safety. Science. Transformation.™

Date: August 28, 2023

Gismo Power
3364 Tanglewood Drive
Sarasota, FL 34239
United States

RE: Letter of Commitment for Small Business Innovation Research (SBIR)

Dear Achim Ginsberg-Klemmt:

UL Solutions (UL) is pleased to provide support for GismoPower's proposal "Wheeling GismoPower onto Residential Driveways Enables Cost-Effective Solar Energy for Lower to Middle Income Homes – Phase 2".

UL is a leader in standards development related to safety certification and our knowledge and experience within certification requirements development ensure proper documentation and implementation of new requirements. UL will draft construction and test certification requirements for the MEGA product .

It is anticipated the work needed to develop a draft standard to total $85,000 (year 1: $42,500; year 2: $42,500). The certification costs would be outside of this proposed standards development work.

Our organization is well-aligned with the goals of the proposed project, and we have well-established certification processes to execute on the support. We look forward to collaborating with you on this work.

Sincerely,

Nathan Wang
Product Manager

UL Solutions
333 Pfingsten Road
Northbrook, IL 60062
USA

T +1.847.664.3951

UL.com/Solutions

Date: June 20, 2024

Gismo Power
3364 Tanglewood Drive
Sarasota, FL 34239
United States

Reference: Project Number 4790844670

Subject: Preliminary Report – Mobile Electric Generating Appliance

Dear Achim Ginsberg-Klemmt:

This letter serves to close preliminary investigation project number 4790844670. This letter is a follow up to our initial letter titled MEGA Preliminary Report Project Number 4790844670 dated July 6, 2023. Additionally, there is a response document Gismo Power sent to UL with your responses to our initial letter. UL modified our initial letter based on those Gismo responses and included UL responses to your comments. That revised initial letter was dated August 01, 2023.

The previous documents referenced above contain the primary deliverable for this project. The technical comments provided in those documents will need to be addressed prior to the next phase of the certification evaluation and testing of the MEGA. Included below in this letter are some topics covered during subsequent phone calls.

VDE Balcony Solar Document

While the VDE standard you provided includes a good path for Plug-in-PV inverter requirements for Germany (and we assume is aligned with the German electrical and installation codes) it does not provide a complete path forward for the entire MEGA Portable PV system with EV charging for installation in the US. As discussed previously, the VDE concepts are similar to what is needed for the US, but the US solution will need to reference and account for the country different issues associated with installations in the US. These differences are in US standards, installation codes and interconnection standards.

During our previous discussions and written responses, we identified the main issues, challenges and potential solutions most of which are directly related to the current overall design of the MEGA system. From our previous discussions, the MEGA design was still under development and potential revision, and finalization of this design is critical to define the bounds of the intended MEGA end product so the specific certification requirements can be identified and developed.

During our June 19th 2024 call you indicated that efforts to find an inverter manufacturer to support the development of the MEGA product are still underway. This is one critical piece of the design that is needed in order to support development of the safety requirements for the MEGA system.

To provide some further explanation on this topic, the VDE standard appears to be similar to what we have been discussing during our previous phone calls and what we mentioned in our previous written correspondence as related to the inverter export function of the MEGA. This VDE standard requires the PV inverter to be compliant with the IEC 62109 series of PV safety standards that cover PV inverters that can include redundant relays to isolate the AC circuit from the DC circuit during ground fault conditions. The VDE standard also introduces requirements for the output cord attachment plug and associated protection of that plug which is not covered by the base inverter requirements in IEC 62109 or UL 1741. IEC 62109 was written based upon UL 1741 and shares most safety concepts, but each standard takes a different technical approach.

UL has a published UL 62109 as the US version of IEC 62109 with some limited US national differences. The UL 62109 and VDE requirements require internal isolation between the highly hazardous PV array voltages and the inverter output circuit. While UL and IEC 62109 does include some reliability and evaluation of some fault conditions, it does not require a full hardware and software functional safety evaluation of the protection controls and hardware to prevent a risk of electric shock on the inverters AC output circuit. The accessible plug terminals that can be accessed by the general public including children need to be evaluated to provide touch safe voltage and energy limits under normal and abnormal hardware circuit and software failures. These protection circuits need to comply with functional safety requirements such that they are touch safe under single point failure conditions directly after a cord connected attachment plug is removed from an outlet.

The required reliability of this protection includes the hardware and also extends to the software/firmware that controls the hardware protective devices to reliably reduce the available voltage and energy on the output circuit and plug terminals to levels of touch safety for the general public. These standards also require this protection is single point failure safe. It is very important to note that any changes to the critical hardware and software/firmware require re-evaluation and potentially retesting to confirm the changes do not negatively impact the operation and reliability of the output plug electric shock protection circuit. With this in mind, any time a manufacturer modifies the hardware components or firmware of a certified inverter used in the MEGA application, this output circuit touch safety protection needs to be considered and potentially re-evaluated and or re-tested. This will be best addressed by close interaction and collaboration with your inverter manufacturer(s).

Our intended path for developing the evaluation requirements for the MEGA will most likely be to combine several safety protection methodologies from multiple existing published UL standards which will be modified for this new and innovative MEGA application.

2026 NEC Revision Proposals

As previously discussed, in order for UL to support proposed changes to NFPA 70, the National Electrical Code (NEC) to address code barriers to the MEGA product, Gismo would need to provide the following:

1. Review and identify the specific articles in the building codes and the NEC that are of concern or are challenges for the MEGA. Additionally, it would be helpful if you could provide your ideas for:

   a) any specific proposal revisions in legislative text with ~~cross-outs~~ of existing text and <u>underlining</u> of new text and

   b) any technical substantiation to support the revision.

2. Provide a written response to the points in the PDF document sent to you by UL Solutions on August 1, 2023.

The NFPA cut-off date for proposals to the 2026 NEC was September 7, 2023. The National Fire Protection Association (NFPA) is responsible for the NEC. They govern the process and rules for developing their standards. While some UL employees are NEC code panel members, we are obligated to follow NFPA's rules of conduct and we are unable to revise those rules or deadlines established by NFPA for the development of the NEC.

At this time, any changes identified by Gismo Power could be used to address information in the upcoming First Draft Report or as part of any Tentative Interim Amendment (TIA) development (see below). If neither of those paths are followed or are successful, then the remaining option is to address those changes in the 2029 NEC code cycle. As for changes to the building codes, those schedules are similar but not correlated to the NEC code cycle. Similar actions would be needed.

Additional information on the NEC procedures are described below.

NFPA's process involves public review of the content. As part of that process, there are specific cut-off dates for when new material can be added to the code. Essentially, no new material can be added once the process starts because of the rules associated with public comment. There is an original input phase, designated as Public Input, with a specific date by which it is due. For the 2026 NEC code cycle, the original date for Public Input to be submitted was September 7, 2023. Those Public Input submittals are then made available. They are subsequently discussed by the Code making Panel in the First Draft meeting, which were held in January 2024. After those First Draft meetings, nothing new can be added to the content changes. If there is any new concepts that are added they must wait for the next edition of the NEC. Again, this is not governed by UL Solutions, and we cannot alter these timelines or process.

The First Draft report will be made available by NFPA on or around July 11, 2024. Once that report is made public, the next public review period starts. If there are any Public Inputs that were acted on by the Code Making Panel as first revisions, or any that were Resolved (meaning no action was taken), they are open for comment by the public. If any of the previously submitted Public Inputs, or any of the subsequent First Revisions, are related to requirements that would impact the MEGA system, then Public Comments can be submitted by Gismo Power. This is the only way to impact the current code cycle, as no new information will be allowed. Comments on previously discussed information is not considered new. If this is either not possible (meaning no related content exists) or if the comments are not made by the cut-off date (August 28, 2024), then nothing can be done.

The NFPA does include a process that can revise previously published editions of the NEC. This involves creating a Tentative Interim Amendment (TIA) to introduce revised requirements outside of the normal 3-year revision process. A TIA can be developed and processed to alter text in the 2023 NEC. The

process will be described here, but it should be noted that revision of the 2023 NEC will not automatically revise the 2026 NEC, and therefore the TIA would need to be resubmitted after the 2026 NEC is published since no new material is allowed to be submitted now as described above.

TIAs tend to only be processed when there is a substantial safety risk or when revisions to the NEC have been found to result in significant unintended consequences to an industry or product segment. The TIA requires the submitter to gain support (sponsors) from two members of the Code Making Panel for which the TIA will be relevant. We can assist with locating supporters. Once two supporters are identified, the TIA will include all the revised text in underline/cross-out format to identify the changes. These changes need to be provided with a rationale that describes why the changes are needed and what is being addressed by the TIA. After this, the TIA must include a description of why this change is needed outside the normal process. This is referred to as the "Emergency Nature" rationale. The TIA will need to describe why the change is needed immediately and outside of the process. We are not aware of what specific revisions you are proposing to make to the NEC to support your design, but it could be very difficult to demonstrate the technical rationale needed to justify the emergency nature of such a proposal. This is commonly the failing point.

Once the TIA is submitted, it will be given to the Code Making Panel that is responsible for the sections of the code being revised. They will vote on two aspects – technical merit and emergency nature. We have seen many instances where code making panel members vote yes to technical merit and no to emergency nature. A no vote on either aspect will cause the TIA to fail. Therefore, if this is a chosen option by Gismo Power, the need for a clear explanation of why this is needed now is critical. Concept such as this will help expand solar generation, this will bring solar to underserved communities, and the like, are not going to be sufficient. Emergency nature will need to include such things as safety related concerns if the rules are not in place and how some products will be dangerous if these rules are not added now. This is a hard thing to address when you are the first person to market.

Inverter Output Circuit Touch Safety Evaluation

One of the primary challenges to a cord connected, grid interactive inverter is related to the fact that existing certified grid interactive inverters are not certified in the US to provide electric shock safety for the output terminals and output circuits. This is due to the fact that there is no requirement to provide such protection in the US standards. The lack of requirements is based on the fact that this is not a traditional approach and no anticipation of requirements existed. UL Solutions could evaluate products for this type of application by working directly with inverter manufacturers to address the hazards for touch safety including single point failure of hardware and software, since Gismo Power does not manufacture the inverter or chargers used in the system. This was identified in UL's initial report as an open issue related to certification of the MEGA system.

During our discussion on June 29th, you mentioned an inverter solution that includes 2 relays to isolate the AC from the DC circuits, which is similar to designs covered under UL62109-1 and -2 for reliable PV ground fault protection. You asked if that methodology was an appropriate solution for this application. As mentioned during our call, the 2-relay solution could be one means to provide inverter output circuit electric shock protection with single point failure protection, provided that additional risks are evaluated by UL and addressed within the design. This would include a verification that the existing ground fault protection circuitry and other inverter circuits connected to the inverter's output terminals do not present a risk of electric shock on the output circuit in the event of hardware or software faults. UL1741 and UL62109 provide voltage and energy limits for such user safety shock protection. This protection

would need to be implemented quickly to prevent a risk for electric shock. There are similar requirements for such protection in the UL1741 Multimode CRD that limits backfeed onto the utility circuit within 1 second.

Accessible Wiring on the PV Modules

During our call on June 19th, you mentioned that the MEGA made use of module mounted PV Rapid shutdown (PVRS) devices to provide electric shock protection for the user access to the exposed wiring and the backs of the PV modules. PV Rapid shutdown equipment is evaluated to provide electric shock protection levels inside the PV array for adult men and women fire fighters wearing personnel protection equipment (PPE). The present requirements for PVRS equipment are to lower the voltages inside the PV array to 80Vdc or less in no more than 30 seconds and to lower the voltage outside the array to 30Vdc or less in in no longer than 30 seconds. The PVRS exposure voltages can be above the risk of electric shock for users including children that have lower body resistance levels as well as no PPE. The accessibility voltage limits for general access including children are 15Vac and 30Vdc. Additionally, PVRS devices wired into the field wiring output circuit of PV modules do not protect and limit the electric shock hazards of the upstream wiring. Additional evaluation would be needed to determine if the use of PVRS equipment can be used to provide the more conservative user level of electric shock protection.

Bidirectional Ground Fault Circuit Interrupter (GFCI) Protection

We have determined that any manufacturer submitting a bidirectional GFCI circuit breaker for certification would have a path forward. UL Solutions is able to certify a bidirectional GFCI circuit breaker using the existing UL 943 requirements. While the existing construction and testing requirements are applicable, we would need to develop the corresponding markings and ratings to support the expanded new bidirectional protection, but this can be accomplished in a relatively short period of time to support such a certification. This is not considered a barrier to certification in and of itself, but the key is that a bidirectional GFCI circuit breaker would need to be submitted for a UL certification as one does not exist now. The MEGA system will need to provide GFCI protection for bidirectional current flow to protect users from risk of electric shock in wet locations where the MEGA is installed. This GFCI protection can be implemented in multiple ways. A GFCI circuit breaker is one such means to provide GFCI protection.

Conclusion:

During this preliminary review project, UL Solutions has identified a number of construction and operational items that will affect the ultimate certification of the Mega system, its installation and its use. The next step in this process is to work with equipment and component manufacturers to address the issues and concerns outlined in this report and subsequent attachments.

The new and innovative process typically starts with the evaluation of a complete product / system. During our previous discussions and meetings about the MEGA design, UL Solutions has outlined and documented multiple construction and functionality issues that need to be addressed to prevent critical safety hazards. These critical safety hazards are the basis for the current safety standards and installation codes.

There are multiple implementations and methodologies that could be employed to address those technical issues and safety hazards. A recommended next step would be for Gismo Power to have a discussion with the manufacturers who will be supplying the inverters and associated system protection hardware for the MEGA to determine how those manufacturers plan to address the new safety protection functionality issues related to the design of the MEGA system. UL Solutions is unable to provide design guidance for the MEGA system. UL Solutions can work with Gismo Power and your equipment/component suppliers to discuss the safety concerns of a system design if this is needed. Once a specific design has been presented to UL Solutions, we can establish and define the corresponding certification path forward for the MEGA system.

UL Solutions provides a published requirements document typically in the form of either a Certification Requirement Decision(CRD) or a new Outline of Investigation (OOI). A CRD augments an existing standard and is used as a path forward while the proposed revision goes through the consensus process. It can be used to add requirements, but no existing requirements can be changed through the CRD. A UL Solutions published Outline of Investigation is a document which is developed for a new technology. The document has not gone through the consensus process, but will serve as the seed document for the consensus process. The OOI or the CRD both provide for a quicker way to achieve a set of requirements that can be used for certification. It should be noted that the subsequent consensus process for either the CRD or the OOI can result in changes to the initial proposed requirements.

Please note the following:

> In no event shall UL Solutions be responsible to anyone for whatever use or non-use is made of the information contained in this Report and in no event shall UL Solutions, its employees or its agents incur any obligations or liabilities for damage, including, but not limited to, consequential damages arising out of or in connection with the use, or ability to use, the information contained in this Report. Any information and documentation involving UL Mark services are provided on behalf of Underwriters Laboratories Inc. (UL) or any authorized licensee of UL.
>
> The issuance of this Report in no way implies Listing, Classification or Recognition by UL Solutions and does not authorize the use of the UL Listing, Classification or Recognition Mark or any other reference to UL LLC or UL Solutions, on or in connection with the product or system.

As we have completed our anticipated work at this time, we are closing this project with this letter. We are instructing our accounting department to invoice you for the costs associated with the work performed.

In the meantime, please feel free to contact us with any questions on this report or the path forward.

Sincerely,

Tim Zgonena

Timothy P. Zgonena
Principal Engineer Distributed Energy Resources, Equipment and Systems

Reviewed by:

Joseph Bablo

Joseph Bablo
Principal Engineering Manager

July 6, 2023

Gismo Power LLC
3364 Tanglewood Dr
Sarasota, FL 34239 USA

Attention: Achim Ginsberg-Klemmt

Reference: Project Number 4790844670

Subject: Preliminary Report – Mobile Electric Generating Appliance

Dear Mr. Ginsberg-Klemmt:

The following letter report is provided to Gismo Power LLC (Gismo) as a result of the preliminary investigation of the Mobile Electric Generating Appliance (MEGA). This letter report will detail our findings for your review. Please note, nothing in this letter report is intended to authorize use of the UL Mark on the product, and any discussion around compliance or noncompliance is simply provided based on our review of documentation provided by Gismo as of the date of this letter report. The content of this letter report is subject to change after a review of the final product.

This preliminary investigation was carried out under the New and Innovative Process (N&I). UL Solutions follows this process whenever a product that is considered a new technology or an innovative use of existing technology is submitted for certification, because existing standards will not properly address the unique aspects of the new or innovative technology. This requires revision of existing requirements or development of new requirements to address the product certification. The N&I investigation is applicable to MEGA as it is not covered by any one set of existing requirements. Requirements from existing standards will be applied where applicable. Where no existing requirements are available, UL Solutions will development new requirements that address this type of product.

The basic approach used in this preliminary investigation was the Hazard Based Safety Engineering (HBSE) approach. The overall safety of any product involves many different factors. The HBSE approach is an approach to identify risks associated with the given product based on its design and intended functionality and use, and then identify how those risks are mitigate within the design of the product. As stated, the HBSE approach was used in reviewing the MEGA. Therefore, if a risk was identified, and the means to mitigate the risk are provided in the product design, a path forward would exist. If a risk was identified but not yet mitigated within the product design, then this would indicate a concern that needs to be addressed. Interaction with Gismo would be needed to identify risk mitigation means and based on the means chosen by Gismo, final requirements can be developed to evaluate the reliability of those mitigation means.

The content of this letter report is intended to provide a summary of any identified risks and where lack of potential mitigation is not provided or not yet clear, and to provide some explanation related to mitigation to allow Gismo to forge a path forward to certification.

PRODUCT DESCRIPTION:

For the record, the MEGA is a free standing, portable PV system that is intended to act as an EV carport with capabilities for EV charging and utility grid interactive inverter power export. The product is grid tied using a power cord that is plugged into any available 240 V receptacle. The grid power will be used to charge the electric vehicle, and the PV generation is used to supplement the grid during the charge event. If the vehicle is not charging, the PV

UL Solutions
333 Pfingsten Road
Northbrook, IL 60062
T +1.847.272.8800

UL LLC © 2022. All rights reserved.

generation can be used for power export as previously mentioned. The product is portable in the fact that it can be moved by engaging the casters and rolling the product to a new location. The product can also be stored indoors, inside a garage or other car port, during inclement weather or while the owner is away from the property. An image of a MEGA as provided by Gismo is shown below.

GENERAL INFORMATION:

The following information is intended to outline the requirements that would pertain to this product to achieve certification. Where compliance can be determined based on available information, this will be indicated. If compliance cannot be determined, information will be provided that will outline the potential hazard, provide some information related to the concern and discuss how this concern needs to be addressed. Based on the fact that this letter report was generated based on available information, the mitigation means may already exist or Gismo may have a solution. In other cases, a mitigation means may need to be developed or implemented.

Additionally, existing text in codes may present a challenge as that text was not written with this product and its unique applications in mind but could easily be applied by the authority having jurisdiction (AHJ) or by any authority at any given time. Where code text may be an issue, this was also indicated. It should be understood that this is not definitive as the AHJ has the final decision on any installation. There are thousands of jurisdictions in the US and each AHJ can approach an installation differently. As UL Solutions cannot speak for the AHJ, we are providing guidance and awareness in addressing these code issues. It will be the responsibility of Gismo to work with the AHJs as needed to gain acceptance of the product if there are questions from AHJs until such time as codes are updated to define portable PV products, such as the MEGA, more clearly.

With reference to code, we will make reference to the National Electrical Code (NEC), the International Residential Code (IRC), and the International Building Code (IBC). With reference to standards, the base standards used as a starting point for this development are UL 1741, the Standard for Inverters, Converters, Controllers and Interconnection System Equipment for Use with Distributed Energy Resources; UL 2202, the Standard for DC Charging Equipment for Electric Vehicles; UL 2594, the Standard for Electric Vehicle Supply Equipment; UL 61730-1, the Standard for Photovoltaic (PV) Module Safety Qualification – Part 1: Requirements for Construction; UL 61730-2, the Standard for Photovoltaic (PV) Module Safety Qualification – Part 2: Requirements for Testing; and UL 2703, the

Standard for Mounting Systems, Mounting Devices, Clamping/Retention Devices, and Ground Lugs for Use with Flat-Plate Photovoltaic Modules and Panels. Reference to any standard will be by number only.

REQUIREMENTS:

The requirements that would be considered applicable to the product are outlined below. This is based on available information and would be subject to change if new information becomes available. Following these requirements is a table. The table will address items that must be addressed to move toward certification in topics 1 - 4. Where requirements can be detailed based on the current information available, we will provide that requirement. Where requirements will depend on input from Gismo, we will indicate that fact. Topic 5 and 6 in the table will address potential concerns or issues that Gismo should be made aware of but are not directly related to certification. The issues in the second table do not require Gismo to provide a mitigation means to UL Solutions, nor are we able to control those aspects of the product, its installation or use. Those items are provided as information to Gismo to assist in understanding potential hurdles toward acceptance of the product.

Requirements will include the following as a minimum. During the actual certification evaluation, the following is subject to change if new information is received.

Metallic Materials: All metallic materials shall be of sufficient strength to perform the given function. For all use case, including assembly, movement, and use, the structures elements shall not bend, deform, break, or loosen. All materials shall be inherently corrosion resistant or provided with a coating to prevent corrosion. All metallic junctions shall include compatible metals such that corrosion is not induced by combining metals with higher resultant electrochemical potentials. See Figure 15.1 of UL 2594.

The structure must also have sufficient strength to withstand abuse. This would include impact from the vehicle as well. Testing will need to be developed to verify strength of materials.

Polymeric Materials: All polymeric materials used for support, enclosures for electrical parts, or operational mechanisms shall be Recognized Component plastics under the category control number (CCN) QMFZ2 is the UL Certification Directory. The material shall be UV resistant and water resistant as indicated by an (f1) rating of the material in accordance with its UL Recognition. When used for support of PV panels, the material shall also carry a suitable Relative Thermal Index (RTI) in accordance with UL 2703, clause 7.4, and shall have the applicable electrical properties in UL 2703, clause 7.2. For other parts, the RTI shall be suitable for the temperatures that are observed in actual use. If not enclosing live electrical parts, there are no requirements for electrical properties. The material shall also have a specific flammability rating of HB minimum unless enclosing live parts that require a fire enclosure, in which case the material shall be rated 5VA in accordance with its UL Recognition.

Mechanical Assembly: The product shall be capable of being used, moved, and stored as intended without having parts or electrical connections loosen or disconnect. Based on the specific design and use cases defined to the user in the instructions, testing may be needed to verify that over time, the product will comply with these requirements.

Supply Connections: The connection to the supply is intended to be a power cord. That power cord shall be suitable rated for the voltage and current involved and shall be suitable for the environment in which it is used. This will include outdoor, wet location ratings, and sufficient temperature ratings. The power cord shall be one that is previously certified under CCN ELBZ.

Electric Vehicle Supply Equipment / Chargers: For electric vehicle supply equipment (EVSE) with an AC output, the correct category is FFWA and for chargers with a DC output, the correct category is FFTG. If a bidirectional product is to be used, the correct category is FFTN.

PV Modules: The PV modules shall comply with the requirements in UL 1703, or UL 61730-1 and UL 61730-2. The means of mounting and bonding the modules shall comply with UL 2703 and shall be appropriate for the PV module used. Interchange of the PV modules will not necessarily mean that the mounting and bonding means is still appropriate for the PV Module. Gismo has indicated a desire to be able to use multiple PV modules, and to have the

ability to upgrade as the modules are advanced. This will need to be reviewed each time to verify that mounting and bonding of the modules is done in a suitable manner.

PV inverter: shall comply with UL 1741 or UL62109 and UL1741. Shall have ratings for the electrical and environmental conditions of use.

Instructions: The MEGA shall be provided with sufficient instructions to inform the user on all aspects of assembly/installation, use, maintenance, and storage of the MEGA product. The instructions shall be provided in printed form with each product. The instructions shall be legible and clearly written. Pictures and drawings are allowed, but they shall not replace the written instruction. Additionally, if the instructions will be used to mitigate a risk as identified in the following table, or simply to identify a risk, then those statements will need to be included. We were not provided any instructions manuals at this time, so a complete review of the manual(s) will be made at the time of the certification evaluation.

Topic 1: Installation

Installation of the MEGA is discussed in the video provided on the Gismo website (Gismopower LLC). In this video, the narration explains that all is needed is to assemble the MEGA and plug it in. This leads to the assumption that the MEGA is delivered unassembled and the owner will be assembling the MEGA on their own. Later in the video, the narration claims that after UL Certification is achieved the MEGA will be ready for direct sale to solar installers, which contradicts the earlier assumption and sounds as if qualified personnel are assembling the MEGA.

The information under this topic in the following rows will detail concerns associated with installation. In some cases, these concerns are based on the assumption that the general public will be installing/assembling the MEGA. If assembly is always done by qualified personnel, then those concerns would be considered mitigated and can be removed.

Item	Potential Hazard	Details	Mitigation Needs
1a	Fire, shock, injury	It is not clear who is installing and assembling the MEGA. If the MEGA is installed by qualified personnel (solar installers, Gismo personnel, etc.), then there is no overall issue from an installation point of view. If this product is installed by the homeowner or renter once the product is purchased, then the concern related to proper and safe installation needs to be addressed. A homeowner or renter will likely not have the necessary training, skills, or knowledge required to recognize and avoid the potential hazards involved with assembling and installing this product correctly. The equipment and components used to build this system can and do operate above voltage and energy levels that can pose a serious and potentially lethal electric shock risk as well as create a fire. PV DC systems can sustain long term high voltage	The traditional mitigation strategy is to require a trained and qualified person to install and maintain the system properly and obtain review oversight and approval from the AHJ and the interconnected utility for the installation. This may be the case and if so, we ask Gismo to confirm. If the homeowner or renter is assembling the product, Gismo can (or may already) provide an appropriate combination of new product safety features to a) prevent exposure to live parts at dangerous voltage levels, b) prevent mis-installation that can cause unforeseen hazards and c) include a detailed set of electrical and structural safety instructions to clearly address the assembly, operation, and maintenance of the MEGA.

		arcing faults if the equipment or systems are improperly assembled.	These instructions will need to mitigate the risks of each potential hazard accounting for an unknowledgeable end user.
1b	Fire, shock	With reference to 1a, the existing safety standards for PV modules, junction boxes, wiring and connectors do not cover hazards related to installation, operation and maintenance by other than qualified persons since that is the traditional method of mitigating the risk. If the homeowner or renter is intended to assemble and install the MEGA, the requirements for these products would not address the shock and fire hazards that may be present to the unqualified person, such as: -Shock hazard due to accessible parts of PV connectors when not mated/interconnected that will be energized when PV is illuminated. -Fire and shock hazard due to opening or interconnecting the mating connectors when PV is illuminated, causing arcing. The presence of an arc creates a shock hazard and if used after an arcing event, can increase the resistance across the connector, creating a fire risk. -Shock or fire hazard due to mechanical damage to or strain on wiring, junction box, or the module due to human activity under or near the carport that could cause arcing, expose energized parts, or compromise the water integrity of the module packaging.	As indicated in 1a, if the assembly and installation is performed by qualified persons, then this is not an issue. If the assembly and installation is performed by the homeowner or renter, then we need to protect the unqualified persons from potential risks. The certified products themselves – PV modules, junction boxes and wiring – are not intended for installation by unqualified persons. Therefore, addition protection means must be added as indicated in 1a.
1c	Shock, fire	Damage to the MEGA or any of its components due to foreseeable misuse or abuse may lead to potential hazards that are not foreseeable or identifiable to the unqualified person. Kids playing in the driveway, sports equipment (basketball, football, baseball, etc.) impacting the MEGA, vehicle impact, etc., may damage equipment or loosen connections thereby creating a potential hazard.	Instructions to the user to maintain and inspect the MEGA may address this depending on what the unqualified person is told to do. Enclosing the parts and protecting them from abuse is another option.

Topic 2: Grounding Connections

Proper grounding us used as one level of protection for the user. Proper ground must be provided and maintained in all use cases of the product. This includes the sizing of all grounding and binding wires, how they care connected (bolted, welded, etc.) to the frame and electrical equipment, and the overall impedance (less than 0.1 ohm) of the ground path when measured from any accessible part to the ground terminal.
If the product is allowed to operate when not plugged in, or if the product cannot be prevented from operating when not plugged in, the potential for the grounding connection to be insufficient exists.
Therefore, a detailed description of how grounding is accomplished and maintained during use of this product will be needed at the time of the certification evaluation.

Item	Potential Hazard	Details	Mitigation Needs
2a	Fire, Shock	Some versions of the MEGA are able to operate in grid export mode and some versions may be able to operate on or off grid (in a multiple mode) condition. When multiple power sources are created within a single facility, it is critical to address the ground and bonding requirements of separately derived systems such that the system does not have more than one Neutral to Ground bond connection for a given system. This single Neutral to Ground bond prevents circulating ground loop currents that can cause overloading of conductors as well as changes in ground potential that could lead to equipment malfunctions and risk of electric shock.	Compliance with the requirements of NEC 250.4 would prevent multiple Neutral-Ground bond connections in the same system. A complete installation manual as well as circuit diagram to assess the grounding configuration(s) of the MEGA will be required as part of the certification evaluation.
2b	Fire, shock	Conductive accessible parts of the support system must be grounded to prevent a shock hazard if they may become energized in a single fault scenario (such as contact between structure and damaged/energized parts of PV module, dc or ac wiring or equipment). This is applicable to the hinged as well as fixed parts of the structure and PV frames if the energized components are at or above hazardous voltage / current levels, which could occur when system is not isolated from the grid, or any time the PV is illuminated. The portable nature of the product could present a hazard in which the PV is illuminated, and therefore live, while the product is moved. The consideration is that the cord will be unplugged at this time and the ground to the product will be lost.	Ensure equipment grounding is maintained even when the product/structure is moved for any reason. Compliance with UL 2703 bonding and grounding requirements* would address this concern as it relates to damaged conductors or grounding path. For the case where the product is moved while the PV is illuminated and the cord is unplugged, a mitigation means is needed to prevent a potentially hazardous condition.

2c	Shock	In relation to 2b, the loss of ground can also adversely affect the electric vehicle supply equipment (EVSE). It is unclear as to whether or not the EVSE can be used to charge a vehicle when the plug is not plugged into the receptacle. If so, the primary protection scheme for EV charging is based on a grounded system of protection for all AC output EVSE. Best case scenario would be that the EVSE shuts down and does not deliver power to the vehicle when the plug is not connected and the PV modules are illuminated. However, there is a potential hazard if the EVSE is allowed to transfer power to a vehicle and the EVSE believes it is grounded when it is not. This will defeat the system of personnel protection required to be in place by the National Electrical Code, NEC 625.22, and as required by UL 2594.	Verification that the EVSE is nonfunctional when the plug of the MEGA is not plugged into the receptacle is needed. If the EVSE is functional, then the risk mitigation associated with an inferior ground connection will need to be reviewed.
Topic 3: Electric Shock The user cannot have access to any hazardous voltage or energy level. The MEGA would have both hazardous voltage and hazardous energy. Therefore, specific protections are required by codes and standards are needed to protect the user from potentially hazardous conditions in both normal operation and abnormal operation (misuse or faults).			
Item	Potential Hazard	Details	Mitigation Needs
3a	Shock and fire	The MEGA is intended to be connected to any existing 240Vac outlet. Connection to an existing outlet can create multiple safety hazards. Existing branch circuits that contain other loads or outlets being used for backfeeding from the MEGA PV would not be in compliance with Article 705 because the loads or outlets would not be protected by a suitably sized CB (705.30(A)) and other equipment in the circuits would be unknown and may not be suitable for backfeed (705.30(D)).	Verification is needed that that the requirements of the National Electrical Code (NEC 705) for interconnecting power supplies to the load side of premise wiring are being followed. Additionally, 705.30(C) is going to require a marking at the circuit breaker that is used for the interconnected power source. That marking could be applied by the MEGA owner, but the marking needs to be provided by Gismo Power. An example is shown below.

3b	Shock	There is a risk of an electric shock from electrical outlets that power cord-connected equipment in wet locations. Receptacles located outdoors are required to be Ground Fault Circuit Interrupter (GFCI) protected receptacles in accordance with the National Electrical Code.	Gismo indicated that the receptacle would be installed by a qualified electrician and approved by the AHJ, therefore GFCI protection is understood to be in place. However, typical GFCI protection is suitable for unidirectional current flow (from grid to load). Grid interactive inverters used in the MEGA will create a bidirectional current flow at the receptacle and current GFCI standards do not address bidirectional current flow. Bidirectional current flow can damage the sense circuits of such GFCI protection. It may be possible to develop new requirements for bidirectional GFCI protection for this application in order to address the connection to any receptacle.
3c	Shock	A tall vehicle roof, vehicle roof rack, or persons under the PV modules could cut into PV back sheets or PV wiring. PV arrays and PV wiring are not evaluated for this type of interaction since typically there is no exposure to the back sheet of a PV module. These hazards can expose live parts operating at high voltages, can cause arcing faults, fire hazards and electric shock hazards for people if they were to contact the exposed parts or come into contact with energized parts of the vehicle.	Parking aids, barriers, warning signs, and warnings in the instructions could help to mitigate the risk of collisions. It may also be possible to develop and implement ground fault circuit interruption electric shock protection for PV array circuits to provide such protection. Other solutions and mitigating means are welcome.
3d	Shock	As previously stated, the National Electrical Code will require a system of personnel protection in 625.22. As part of that system of protection, there is an interrupting device that will open the circuit that transfer power to the vehicle. The code further states that this protection device needs to be located within 12 inches of the receptacle for all cord-and-plug connected EV supply equipment. The interrupting device in the current version of the MEGA would be located within the enclosure of the SolarEdge EV Charging Inverter, therefore the power cord can only be 12 inches in length. The rationale for this is that if there is a fault detected by the protection system and the	The current length of the power cord is unknown, but it assumed to be longer than 12 inches. It is understood that the overall device is not as EV charger but contains an EV charger. However, this does not preclude the use of Article 625 of the National Electrical Code. The issue of cord length could be managed if the cord length was 6 feet or less and the cord was managed not to touch the ground in any use case. Further, the interrupting device could be provided in the plug or within 12 inches of the plug. The current Solar Edge

		interrupting device opens, everything before the point of interruption will remain live. As such, the power cord will remain live. Therefore, the length is limited to 12 inches to prevent damage from contact with the floor, exposure to vehicle fluids, and drive over by the vehicle.	product could be replaced with out that provides that option. Other potential solutions may exist and Gismo is welcome to discuss options.
3e	Shock	If the PV modules are illuminated and the plug is not inserted into a receptacle, the accessible conductive parts of the plug would be energized. A shock hazard would exist if the plug blades are contacted by a user or nearby person.	It is possible to develop evaluation requirements for additional electric shock protection for accessibility of grid interactive inverter output circuits. Gismo may already have systems included that will address this concern. Another possibility may be to provide a touch safe plug and outlet assembly that prevents access to the plug or outlet terminals.

Topic 4: Physical abuse
Different forces on the product could create potential hazards. This should be mitigated by design features. This includes wind forces, weight of snow on panels, impact from vehicles, impact of other objects, or other forces

As the device is considered portable or movable, different forces applied or misuse during movement could also create potential hazards. This includes failure to lock casters that allow unintentional movement from sloped surfaces, wind, or impact, as well as uncontrolled movement under human power.

The physical weight of the MEGA may prevent it from tipping over or being lifted by wind forces. The size may also prevent it from tipping over due to movement by the user. However, this is still something that should be considered. Stability tests tip a product 10 degrees and verify that it will not tip over. This would be applicable to the MEGA.

Further concerns are indicated below.

Item	Potential Hazard	Details	Mitigation Needs
4a	Shock, fire	Due to normal movement of the MEGA, or inadvertent movement as described above, strain could be placed on the power cord at the receptacle or at the connection point to the MEGA structure. Depending on the amount of force applied, damage could occur on the product or on the receptacle. This damage could lead to a shock or fire hazard.	Part of inadvertent movement would be addressed if the casters automatically locked upon final positioning. If the casters require user interaction to lock them, then this it is easily foreseeable that this step would be ignored, and we would not rely on user interaction. Movement due to other forces may already be addressed. If not, prevention of inadvertent movement when plugged in would need to be considered.

Topic 5: Fire Separation Distances

The 2024 International Building Code (IBC) and the 2024 International Residential Code (IRC) will be published soon. With those new publications, there is a new definition for an elevated PV support structure. The MEGA will fall under that definition and as such, all requirements in the 2024 IBC and 2024 IRC that pertain to elevated PV support structures will apply to the MEGA product. One such requirement relates to fire separation distances. This requirement will state that the elevated PV support structure shall be located a specific distance away in order to prevent flame spread from one structure to another. This spacing will be required from garages, houses, or any other structure on the property.

Item	Potential Hazard	Details	Mitigation Needs
5a	Fire	The definition of elevated PV support structure will be as follows: PHOTOVOLTAIC (PV) SUPPORT STRUCTURE, ELEVATED. An independent photovoltaic (PV) panel support structure designed with useable space underneath with minimum clear height of 7 feet 6 inches (2286 mm), intended for secondary use such as providing shade or parking of motor vehicles. This will be a clear definition in the IBC and IRC. This will lead to the following requirement in the International Residential Code: Elevated PV support structures shall be considered a roof for the purposes of establishing the number of stories and fire separation distances.	Use instructions shall be used to inform the user that the MEGA is to be located and used a specific distance from other structures in order to meet this code requirement. The default minimum distance would be 5 feet from other structures and from lot lines.

Topic 6: Unauthorized Use:

There are approximately 3300 utilities in the US. Each one of those utilities could have different rules or a subset or rules that pertain to back-feeding, or power export, to the building wiring system. In many cases, the utility wants to be made aware of the fact that any additional sources are being added. However, UL cannot police the needs of the utilities nor we can document each and every different rule. So, it will be up to Gismo to navigate that landscape. Below are some potential concerns to be aware of.

Item	Potential Hazard	Details	Mitigation Needs
6a	Risk associated with disruption of utility power or loss of	An AHJ(s) may require a permit and approval of the electrical and structural installation (per the IBC and IRC, particularly section 105.2), and if not obtained, the AHJ could disconnect	In lieu of addressing the hazard on a case by case basis, a more reliable and reproducible method of mitigating the concern should be in place. Gismo

	access to residence by order of AHJ	the MEGA system or disrupt power to the facility / site. At the current time, Gismo appears to be working with the local authorities on a case-by-case basis. Over time, if this product is sold in higher quantities or mass produced, the ability to interact on a case-by-case basis may diminish.	could proactively work with AHJs to explore options to obtain a “pre-approval” for the MEGA, i.e. waive traditional requirements for approval on a case-by-case basis. Alternatively, instructions provided with the product could warn the users of the risk of disruption to utility service if approval from the local AHJs or electric utility for an interconnected PV power source is not obtained. Another option would be to pursue a change to section 105.2 in the International Building Code (IBC) and International Residential Code (IRC) to add a portable PV carport to the list of structures not requiring AHJ approval.
6b	Risk associated with disruption of electric utility power to the site/ residence due to disconnection by the utility	Gismo has indicated that the MEGA concept would not include an interconnection agreement with the electrical utility. This may result in electrical service to the residence being disrupted by the local electric utility. Utility providers often have specific rules for connecting parallel power generation sources to backfeed their electric utility. These rules typically require approval by the local utility and AHJ. The local utility service provider could “red tag” a location if they determine that an unauthorized interconnected power source is presen and shut down electric power to the site. An unplanned disruption of power by utility could remove power to critical loads such as heating, air conditioning, medical equipment, etc., which could result in an injury to the residents.	Similar to item 6a: Gismo could proactively work with electric utilities to explore options to obtain a “pre-approval” for the MEGA, i.e. waive traditional requirements for approval on a case-by-case basis. Alternatively, instructions provided with the product could warn the users of the risk of disruption to utility service if approval from the utility for an interconnected PV power source is not obtained.
6c	Risk to utility workers or first responders if unaware of interconnected PV power source.	Electric utilities record installation locations of utility interactive generation connected to their utility grid. Many utilities use this information to implement extra safety protection measures before they start work on the utility distribution equipment and power lines for utility worker safety. Utility workers could be exposed to electric shock hazards if they are unaware of the utility interactive power generation.	Risk to first responders if they were unaware of a connected parallel power source could be addressed through an NEC-compliant dedicated branch circuits intended for connection to the PV inverter output. Gismo could address this with the given utility as mentioned in 6a and 6b, or provide instructions to the user to provide that NEC compliant dedicated branch circuit

			or provide instruction to the user to work with their utility provider.
6d	Potential damage to utility generation and regulation equipment and or neighboring electrical equipment	Electric utilities require oversight and authorization to customers exporting power to their electric grid in order to properly size, protect and maintain the local grid for safe and reliable operation. Utility customers typically sign an agreement with utilities that specifically require utility permission to interconnect ("backfeed") a secondary power source. Violation of the agreement could result in safety risks to utility workers, and/or legal ramifications or disruption of power to other utility power customers. Electric utility interconnection rules tend to be a mix of performance and safety related requirements which vary from utility to utility. While many utilities use similar requirements, there are notable differences, and the inverters need to be programmed to comply with the local utility grid codes. Utility interconnection requirements are typically intended to prevent negative interactions between the grid interactive inverters and utility monitoring and protection equipment that is intended to stabilize and protect the utility grid equipment as well as other power customer load equipment installed on the grid. The below web link includes general information on common contractual Issues for Grid-Connected Systems including the need for $100K liability insurance in case the system does damage to the grid or neighbors. https://www.energy.gov/energysaver/grid-connected-renewable-energy-systems As part of the permitting process with the utility, many utilities require communications-based interoperability control of grid support interactive inverters. While not specifically a traditional product safety hazard, local utilities will consider this as a safety hazard as a considerable increase in uncontrolled grid	See items 6a – 6c.

		interactive products can exceed a utilities ability to properly control and regulate the utility grid voltage and frequency as well as perform accurate fault current calculations. Significant amounts of uncontrolled generation can result in destabilization of the local electric utility grid.	

COMPONENTS:

Within the MEGA, numerous components are used. Each of these components may or may not already be certified. If certified, they may or may not be certified by UL Solutions. This will be a critical knowledge step in determining the path to certification.

Throughout this letter report, reference has been made to previously certified products or materials. The need for previously certified products and materials centers on reliability and future identification. If a product or material is previously certified by UL Solutions, then we have a record of the reliability of the product or material; we have control over its construction so that changes to the component or material cannot unknowingly affect Gismo's design adversely; and we can eliminate Gismo's responsibility in verifying that those components or materials have not changed. To verify that products or materials are previously certified by UL Solutions, the certification directories available at www.ul.com (link following this paragraph) can be used to review previously certified products and materials.

https://www.ul.com/resources/apps/ul-iq-databases

The acceptability of all safety critical components and materials will occur during the certification project. If all UL Solutions certified products and materials are used, then the path to certification is easier. If products or materials certified by other organizations are used, we will need to determine the path forward for certification. This may require annual follow-up testing to verify that nothing has changed in relation to the system we certified.

NEXT STEPS:

Gismo will need to review the content of this letter report and decide what mitigation strategy they wish to employ to address the concerns outlined above. Once the final product and information are ready, we can discuss the steps to certification.

In the meantime, UL Solutions will undertake outreach to our Electrical Council. The electrical council consists of volunteers that include authorities, inspection officials, electricians, and the like, that advise UL Solutions on opportunities to support and further safety. We can discuss this product type with the council members, without details and specifics on the MEGA product, and gain a better understanding on how this product would be perceived within the electrical authority and inspection community. We will report back to you on the outcome of that outreach.

CONCLUSION:

As previously indicated, we are providing this information to you in this letter report as a summary of our findings related to the MEGA product. We would be happy to discuss these findings in more detail as needed. Once Gismo has reviewed this information and it ready to move toward certification, please let us know and we can open a project to perform the certification work.

At that time, Gismo should be prepared to provide a sample, all structural drawings and schematics, a bill of materials for all equipment used in the MEGA, and a copy of the installation and use instructions that will be provided.

If you have any questions or concerns, please feel free to reach out to the undersigned.

Very truly yours,

Tim Zgonena

Tim Zgonena
Principal Engineer
Energy and Industrial Automation

Colleen O'Brien

Colleen O'Brien
Principal Engineer
Energy and Industrial Automation

Scott Picco

Scott Picco
Principal Engineer
Energy and Industrial Automation

Reviewed by:

Joe Bablo

Joe Bablo
Principal Engineering Manager
Energy and Industrial Automation

Appendix A: Graphical example of the need for a dedicated circuit

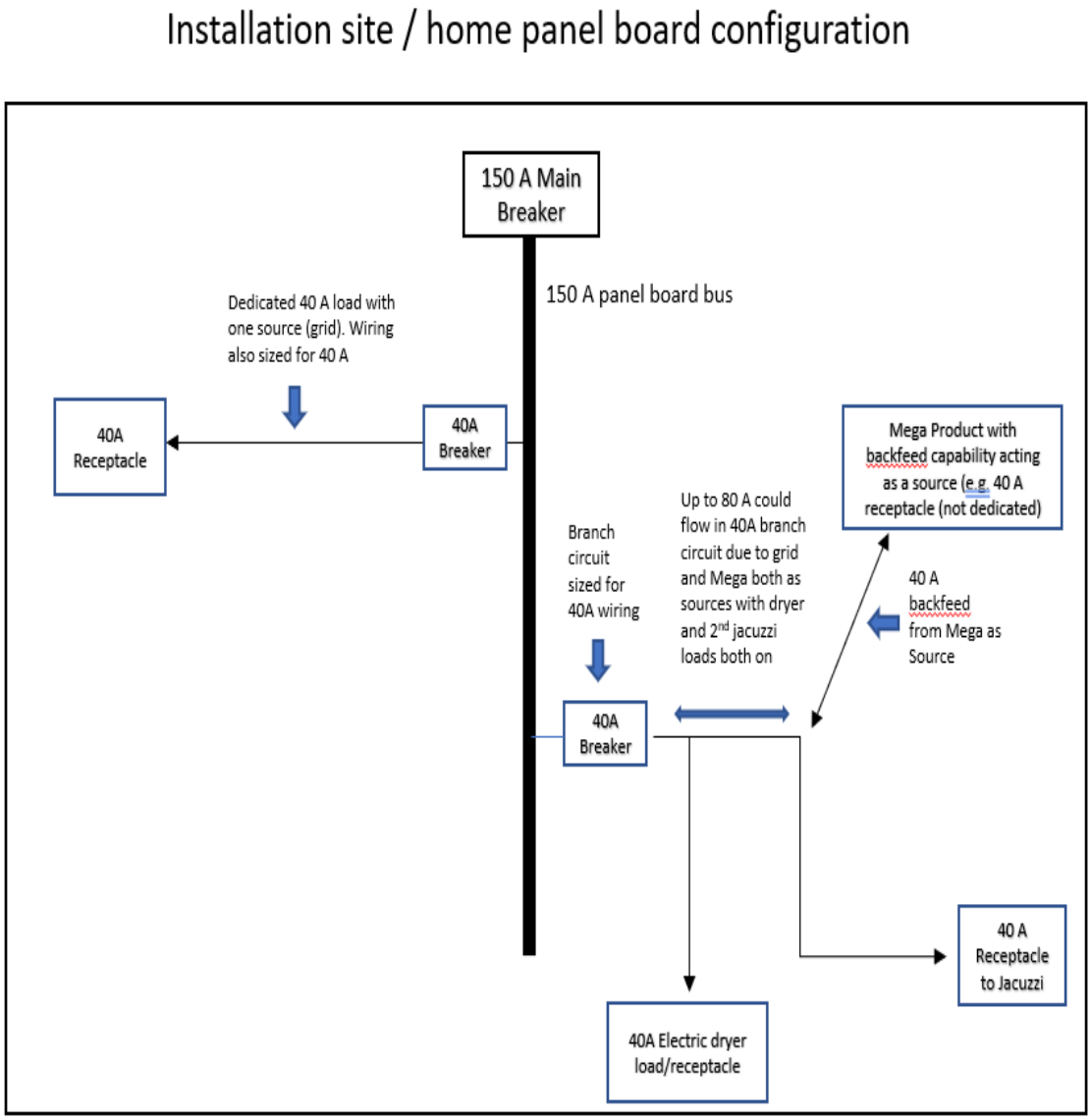

<u>PAGE 4:</u> ***"PV inverter: shall comply with UL 1741 or UL62109 and UL1741"***
UL 1741 is mentioned twice. Is there another standard involved or is this just a typo?

There are two options. Option 1 is compliance with UL 1741 for safety and grid interaction performance. Option 2 is compliance with UL 62109 for safety plus the grid interaction requirements from UL 1741.

1a) 1b) "If assembly is always done by qualified personnel, then those concerns would be considered mitigated and can be removed."
We apologize that the messaging on our website is not so clear. The initial assembly of the MEGA is intended to be performed by authorized personnel or a licensed solar installer company. Transport or the temporary storage of the MEGA in a garage or shelter to protect the unit from wind storms can alternatively be performed by the owner or a solar company.

Yes, the requirements for MEGA to be installed by a qualified person will eliminate the exposure of many hazards not addressed by the existing PV equipment standards. If this is always installed initially by a qualified person, we can control many issues in the instructions and then rely on that for risk mitigation. Note: This will not address the general exposure to the backs of PV modules and wiring.

As noted in the letter report, PV equipment standards do not evaluated PV DC wiring and the backs of the PV modules for exposure to general public access. The PV DC wiring can be easily damaged through general public access and create a significant risk of electric shock and fire. This general access protection concept is addressed today via the NEC 690.31 (A) (2):

690.31 (A)(2) Where Readily Accessible. Where not guarded*, PV system dc circuit conductors operating at voltages greater than 30 volts that are readily accessible to unqualified persons shall be installed in Type MC cable, in multiconductor jacketed cable, or in raceway.

*Article 100 defines "guarded" as follows: Covered, shielded, fenced, enclosed, or otherwise protected by means of suitable covers, casings, barriers, rails, screens, mats, or platforms to remove the likelihood of approach or contact by persons or objects to a point of danger.

<u>PAGE 6:</u> ***2b) "For the case where the product is moved while the PV is illuminated and the cord is unplugged, a mitigation means is needed to prevent a potentially hazardous condition."***
We would like to know if your team believes that the connector prongs maintain dangerous voltage levels after the cord is unplugged. From our perspective, this concern seems unfounded, because UL1741 compliant PV inverters should be required to include anti-islanding circuits.

Comment 2b is not specifically related to a shock risk due to the prongs of the plug remaining energized when the plug is removed. Comment 2b is intended to address risk of electric shock related to the loss of equipment grounding when the plug is removed while the array is illuminated. There is sufficient DC energy in the PV array to create a significant shock hazard if a fault occurs between the PV array and the structure or other accessible conductive components.

Grounding of accessible conductive parts, such as the structure of the canopy, reduces the shock hazard that may be present if the structure becomes energized as a result of a single fault condition within the MEGA's equipment, components or wiring. An example of a single fault condition is a PV ground fault, which could occur if (for example) there is damage to the electrical insulation on the PV module or PV conductors resulting in electrical contact between the conductor and the structure, energizing the structure (if the array is illuminated). If the structure is not adequately grounded, a person coming into contact with the structure could be shocked.

Other safety concerns related to the shock hazard at the prongs of the plug when the plug is removed from the socket is addressed below in this document.

On May 29th we provided a series of measurements to the UL team by email depicting the voltage drop as a function of time during the unplugging procedure. The appliances and equipment used for the measurements were carefully chosen to include a broad spectrum. These included a halogen workshop lamp, a UL-Listed electric drill produced by Central Machinery, a grid-tied SolarEdge SE7600 Class II EV-Charger integrated with a PV inverter (without backup batteries), and a Sol-Ark 8K Hybrid Inverter outfitted with a 5.12kWh LiFePO4 backup battery.

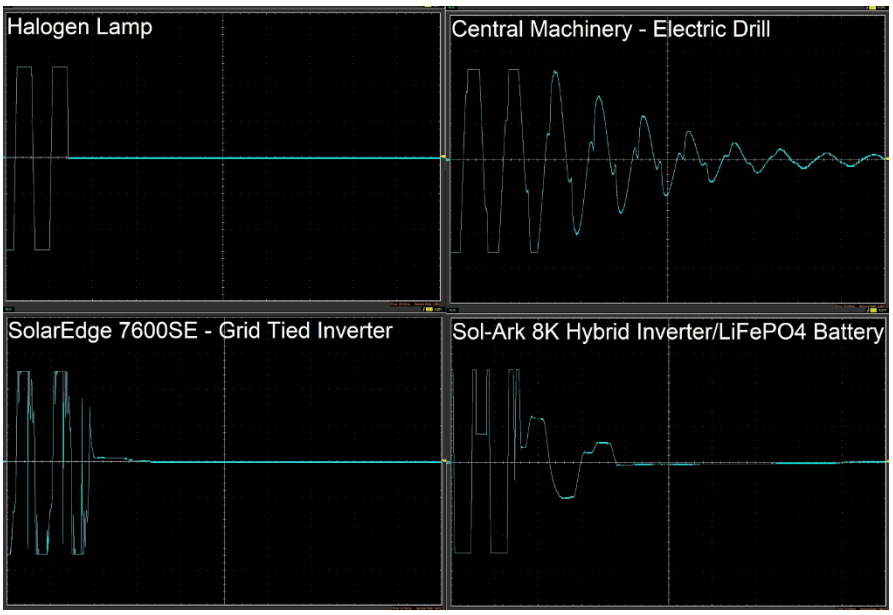

Figure 1: Plug voltage drop at prongs after unplugging from receptacle

Interestingly, the voltage drop seen after unplugging the halogen lamp was nearly instantaneous, which was within our expectations. **However, the voltage drop for the unplugged electric drill appeared not to adhere to the stringent requirements currently applicable to UL1741 compliant solar inverter systems. Fortuitously, the standards for "backfeeding" are more forgiving for electric drill manufacturers.**

We would like to know if you would be open to removing this concern from the letter report.

The below details are specifically intended to address the output plug terminal access concerns. Please confirm if the MEGA includes some sort of reliable (hardware and software) protection to

isolate the output circuit from the hazardous PV circuits within the inverter after the plug is removed from the outlet to shut down the “output circuit” such that the plug blades are reliably protected from creating a shock hazard, This electric shock protection needs to be single fault reliable.

Grid interconnection testing is performance based and the corresponding requirements do not include the same high level of required reliability for the circuit design, operation and failure tolerance as for an electric shock and fire evaluation. While the provided oscillographs show a drop in voltage, they do not demonstrate and address the touch safety requirements needed to reliably protect users from a risk of electric shock under normal and foreseeable fault conditions. The testing appears to be an attempt to perform a variation of the grid interconnection anti-islanding test. The anti-islanding test shows a cessation of current flow and it does not demonstrate touch safety or isolation between the inverter output circuit and the hazardous 600V PV array circuit. This is due to the requirement within IEEE 1547 (2018) as referenced per UL 1741 SB that inverters and DERs are required to cease to energize within 2 seconds upon the detection of an islanding condition. The definition of cease to energize per IEEE 1547(2018) is as follows: *Cessation of active power delivery under steady-state and transient conditions and limitation of reactive power exchange.* Per this definition, an inverter and/or DER evaluated to UL 1741 SB, may continue to exchange reactive power after the detection of an island. Additionally, there is no requirement per this definition that the inverter / DER reliably prevent an electric shock condition upon the detection of an island as the requirement is only to cease active power delivery.

There is a serious risk of shock and fire via the exposed uninsulated pins of the attachment plug that are connected to the inverter output circuit. The output terminals of a UL1741 product are normally considered to be a hazardous circuit and are not intended to be touched by users or service persons while connected to any sources of power. As such these output circuits are required to be located within an electrical enclosure and the wiring connected to them is required to be installed within a suitable electrical raceway. With this type of protection from access, PV inverters are not required to have reliable isolation between the hazardous PV input circuit (including any high voltage monitoring or control circuits) and the inverter’s AC output terminals and connected circuits.

User accessibility protection evaluation requirements will need to be applied to any exposed plug terminals connected to an inverter’s output circuit. One accessibility mitigation means would be to provide an insulated plug and socket that prevent user contact with uninsulated live plug pins. Another common means to prevent access to live parts is to provide reliable switching mechanism including relays or contactors to isolate the output circuit when the plug blades are accessible to the user.

Grid interactive inverters have multiple internal circuits connected to their output terminals. They commonly include circuits for; power production, inverter output monitoring and grid monitoring. A touch safe inverter output circuit would need to have reliable isolation and protection from all hazardous circuits under normal and foreseeable abnormal fault conditions (such as welded relay contacts, isolation breakdown and open / short circuit electrical component failures). Inverter controls software or firmware that is used to control protection circuits and isolation relays (that may be used to isolate output plug conductors) need to be evaluated for functional safety / reliability under fault conditions. The relays need to be in the proper state at the proper time to provide isolation.

PAGE 9: ***Topic 4: Physical Abuse***

As the device is considered portable or movable, different forces applied or misuse during movement could also create potential hazards. This includes failure to lock casters that allow unintentional movement from sloped surfaces, wind, or impact, as well as uncontrolled movement under human power.

We are sorry that this was unclear. The MEGA is designed with two alternative sets of accessories that can be attached during various use cases. The removable, self-elevating caster wheels should be attached whenever the MEGA needs to be stored away in a shelter or transported. During normal operation with active electricity generation of the MEGA, the corner braces with removable ground anchors should be mounted instead of the caster wheels to assure protection from wind impacts and unauthorized use. (Please see EEDAS Structural Engineering plans)

The following is in response to the above clarification notes that anchors are to be used when electricity is being generated:

- To mitigate the risk of personal injury, anchorage of the carport would be required to prevent accidental movement any time a load (wind, seismic, tipping, gravity, accidental human movement) could exceed the gravitational resistance of the structure. To mitigate the risk of shock or fire, anchorage is also needed any time the loads exceed the gravitational resistance and the PV is illuminated or any time the plug is connected. Since many of these applied loads are unpredictable, UL's opinion is that **anchorage is a requirement, and is not optional, when the system is exposed to these potential loads.** AHJ's are also likely to require anchorage based on the requirements of the IBC and IRC.
- The risk of a user intentionally or unintentionally not anchoring the operational system when required should be addressed.
- Regarding the capacity of the specified anchors:
    - The installation of asphalt anchors would require special skills to assess the type, quality, and depth of an existing asphalt driveway at a specific site, and to install the anchors correctly. The installation manual should specify that the qualified installer must do that part of the installation.
    - The manual should also clarify how anchorage is achieved on other types of surfaces if permitted, for example on concrete, gravel or other types of driveways.
    - The specified anchors did not reference a standardized test for the stated uplift capacity, so it is not clear how the capacity was determined.
    - It is unclear whether the stated capacity would be retained after the anchorage points are re-used many times over the design life.
    - A lateral load capacity of the anchorage points should be determined in addition to an uplift capacity. Lateral loads on the structure could be due to gravity (if on a sloped surface), seismic loads, or from an accidentally applied load.
    - The installation instructions should provide a method to determine the combined loads at the site due to wind, gravity, snow and seismic and required anchorage capacity, including an appropriate safety margin.
    - Maintenance of the anchorage points would need to be described in the installation instructions, for example how to keep the threaded holes clear of debris, prevent corrosion, etc.

<u>PAGE 11:</u> ***6b) "Gismo has indicated that the MEGA concept would not include an interconnection agreement with the electrical utility" "Gismo could proactively work with electric utilities to explore options to obtain a "pre-approval" for the MEGA"***

To clarify our intentions, we aim to establish a simple, implicit nationwide interconnect agreement and have the hope that a future "UL-Mark" for electricity generating domestic appliances will automatically imply that these devices can be legally interconnected with the electric grid without lengthy, locally varying, administrative processes just like electric clothes dryers and electric kitchen ranges can be interconnected with the electric grid today.

GismoPower does not see any competent, substantial evidence that would justify the dramatic regulatory favoring of grid interconnected electric loads vs. grid-connected electric generators that is the norm at this point in time.

GismoPower's grid impact analysis studies with the expert research teams at NCSU and SLAC National Accelerator lab aim to elevate the regulators confidence that so called "backfeeding" will no longer be considered a nuisance or a potential hazard, but a benign and, during peak demand hours, a very desirable operating condition for major domestic appliances.

Local electric utilities govern this decision for their specific jurisdiction, each of the 3300 US utilities could have a different interconnection and communication protocol. It is likely that the MEGA will not communicate or be compliant in some electric utility jurisdictions. There is no nationwide interconnection agreement today. If Gismo is able to drive publication and acceptance of a nationwide grid code, UL can evaluate the MEGA for its compliance. The purpose of this comment is to alert Gismo to likely electric utility challenges to compliance with local grid interconnection requirements and codes. It is foreseeable that some utilities may disconnect electric power to facilities that are not in compliance with local grid codes.

<u>PAGE 11 &12:</u> ***6c) "Risk to utility workers or first responders if unaware of interconnected PV power source."***
"Utility workers could be exposed to electric shock hazards if they are unaware of the utility interactive power generation"

Similar to topic 2c) on page 6, the above concerns appear to be based on the assumption that UL-1741 compliant PV inverters maintain dangerous voltage levels during grid power outages.

These concerns might have some validity for rotating machine DER's like wind turbines, but are likely unfounded when applied to current PV inverter technologies with code compliant anti-islanding circuits. On May 29th Gismo Power provided a series of measurements to the UL team by email depicting the voltage drop as a function of time after loss of grid voltage, which include two UL-1741 compliant inverter systems equipped with anti-islanding circuits..

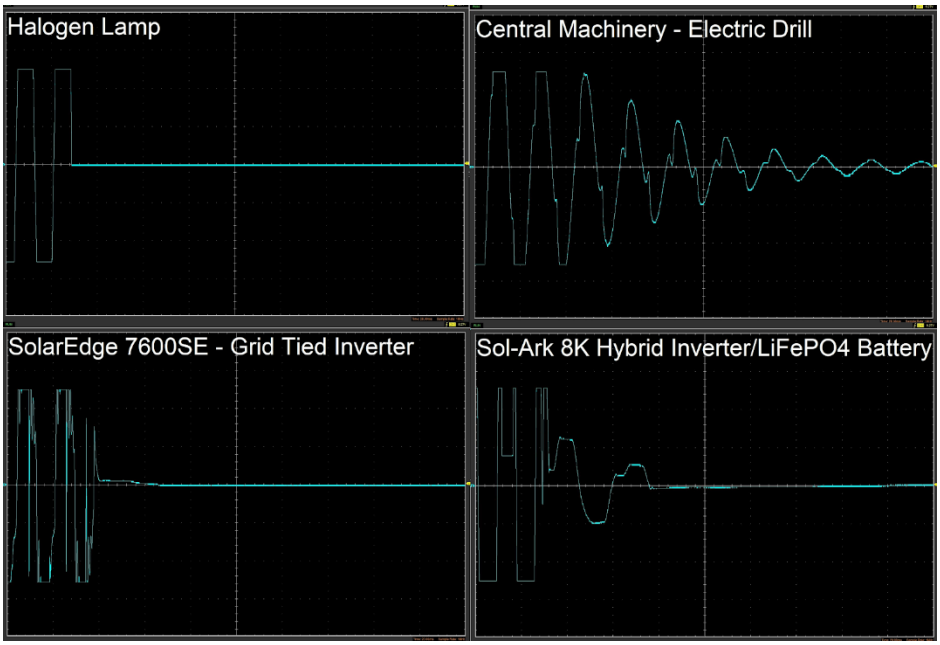

Voltage drop measurements after loss of grid connection

A new UL-Standard for electricity generating domestic appliances should make a sincere effort to eliminate outdated concerns and unsubstantiated hazards without justification that might have had some validity at the time before the UL-1741 standard was established.

Would you be open to removing Item 6c) from the letter report?

While the provided oscillographs show a drop in voltage, they do not demonstrate and address the touch safety requirements needed to reliably protect users from a risk of electric shock under normal and foreseeable fault conditions.

Electric utilities have worker safety protocols, protection policies and requirements. Most utilities track / map the specific installation locations of grid interactive inverters. Some electric utilities take additional precautions when working on the utility lines and equipment in the vicinity of grid interactive inverter installations. A majority of electric utilities in Arizona and other states require external disconnect switches be installed on PV inverter output circuits to provide additional protection for their worker. As noted earlier in this letter, the grid interactive performance testing does not provide reliable isolation and protection from risk of electric shock on the inverter power output circuits.

PAGE 12: ***6d) "Potential damage to utility generation and regulation equipment and or neighboring electrical equipment."***

"The below web link includes general information on common contractual Issues for Grid-Connected Systems including the need for $100K liability insurance in case the system does damage to the grid or neighbors. https://www.energy.gov/energysaver/grid-connected-renewable-energy-systems [..] While not specifically a traditional product safety hazard, local utilities will consider this as a safety hazard."

UL-1741 and IEEE-1547 compliant solar inverter systems are specifically designed, built and approved by UL to not cause the alleged hazards. The provided link contains general information and

no explanation why a dedicated liability insurance would be justifiable or why end users would need to shoulder the product liability risks.

Would Underwriters Laboratory be open to developing a future UL-standard that would prevent local utilities from elevating benign operating conditions into severe safety hazards which are not considered traditional product safety hazards?

UL attempts to publish standards to align with local building codes and standards as well as local utility interconnection requirements. UL is not able to write standards that undermines or overrules local jurisdiction installation codes, standards or requirements.

"Significant amounts of uncontrolled generation can result in destabilization of the local electric utility grid."

This general allegation remains vague without any quantification or substantiation. Gismo Power's grid impact analysis studies carried out by FREEDM Systems Center at NCSU shows that combining distributed generation with loads at the same location would reduce grid impact and even flatten the duck curve if combined with smart EV-Charging.

SLAC National Accelerator laboratory has offered to validate critical concerns that UL might have which would prevent the MEGA from becoming a UL-Listed, grid tied PV generator. Please be so kind and let us know if your team would be open to join our ongoing collaboration with SLAC and the UGRID team at Stanford.

A low percentage of grid interactive PV generation (relative to overall utility generation) will typically not have a significant impact the utility grid functionality and stability. As the percentage of uncontrolled PV generation increases, so can the likelihood of corresponding negative utility performance that can lead to grid instability. Both Hawaii and California have encountered grid stability problems resulting from high penetration levels of grid interactive PV generation, which did not operate in concert with local utility generation protection settings. The purpose of this comment is to alert Gismo to likely electric utility challenges to noncompliance with local grid interconnection requirements and codes.

Do the fire separation distances apply for vehicles like for example "DC-Solar" solar trailers as well? The MEGA has wheels just like the DC Solar trailers have wheels and the MEGA is intentionally designed to be wheeled around. Why could the MEGA not be considered a "trailer" from a regulatory perspective and be parked on driveways under the same legal framework with the additional option to safely sustain high wind speeds by using the ground anchor accessories?

The MEGA is defined in the 2024 IBC and IRC as an elevated PV support structure that can act as a car port. The code has this definition because this is how the inspectors and building officials are viewing this device. Gismo may choose to propose revisions to applicable codes and standards to better align with the MEGA product and its intended use.

Trailers intended to be towed by a vehicle are regulated by the Department of Transportation (DOT) and depending on state requirements, typically required to be registered with the Division of Motor Vehicles and would not be regulated by the building code.

If the official fire separation distances do not apply for Lithium-Ion home batteries and solar trailers, where would be the fire hazard originating from the MEGA racks?

Fire Separation distance is designed to provide a separation between buildings or structures on a building site to limit the potential for the *spread of fire from on structure to another*. The fire hazard may originate from equipment parked below or various human activities below the structure, or from adjacent structures.

Residential ESS are subjected to a specific set of fire safety requirements in applicable codes and standards (see below).

We appreciate the outreach to UL's Electric Council to include their perspective. Has the Electric Council been involved in approving wooden wall mounted lithium-ion home batteries?

The UL 9540 standard is used to evaluate residential and commercial energy storage systems. Further, UL9540A is the safety standard for Testing the fire safety hazards associated with propagating thermal runaway within battery systems for energy storage. Residential systems undergo this testing to be installed indoors within residences. Compliance with this standard is required by multiple building codes to reduce energy storage related building fires. The electrical council is involved in many areas including energy storage.

The UL9540A safety standard for Testing the fire safety hazards associated with propagating thermal runaway within battery systems is used to evaluate energy storage systems for installation on buildings. Compliance with this standard is required by multiple building codes as a means to reduce energy storage related building fires.

Will there be an interaction between us and the Electric Council, or will we receive a one-way communication through a written report?

The Electrical Council is a group consisting of members in many areas of technical and practical expertise. The Council is tasked with providing UL Solutions with access to this group to assist in the development and maintenance of UL Standards. Additionally, their expertise can provide valuable information related to installation and use of UL Listed products. If a product has features or design aspects that raise questions as to how this would be perceived in general, we typically interact with the Council to obtain their input and guidance which we then use to form our requirements for the standard. The Standard is then developed through the consensus process which is outside the purview of the Council. UL interacts with its Council for the benefit of the standard and certification. There is no direct interaction of the Council with the customer as we wish to receive their open feedback and not engage in debate. We will report back what is derived from the Council interaction and then Gismo Power will have the opportunity to respond as necessary.

Public Input No. 2287-NFPA 70-2026 [Section No. 90.2(A)(2)]

(2) Not Covered.

This code does not cover the following:

(1) Installations in ships, watercraft other than floating buildings, railway rolling stock, aircraft, or automotive vehicles other than mobile homes and recreational vehicles

Informational Note: Although the scope of this code indicates that the code does not cover installations in ships, portions of this code are incorporated by reference into Title 46, Code of Federal Regulations, Parts 110–113.

(2) Installations underground in mines and self-propelled mobile surface mining machinery and its attendant electrical trailing cable

(3) Installations of railways for generation, transformation, transmission, energy storage, or distribution of power used exclusively for operation of rolling stock or installations used exclusively for signaling and communications purposes

(4) Installations of communications equipment under the exclusive control of communications utilities located outdoors or in building spaces used exclusively for such installations

(5) ~~Installations under the exclusive control of an electric utility where such installations~~

(6) ~~Consist of service drops or service laterals, and associated metering, or~~

(7) ~~Are on property owned or leased by the electric utility for the purpose of communications, metering, generation, control, transformation, transmission, energy storage, or distribution of electric energy, or~~

(8) ~~Are located in legally established easements or rights-of-way, or~~

(9) ~~Are located by other written agreements either designated by or recognized by public service commissions, utility commissions, or other regulatory agencies having jurisdiction for such installations. These written agreements shall be limited to installations for the purpose of communications, metering, generation, control, transformation, transmission, energy storage, or distribution of electric energy where legally established easements or rights-of-way cannot be obtained. These installations shall be limited to federal lands, Native American reservations through the US Department of the Interior Bureau of Indian Affairs, military bases, lands controlled by port authorities and state agencies and departments, and lands owned by railroads.~~

~~Informational Note to (4) and (5): Examples of utilities can include those entities that are typically designated or recognized by governmental law or regulation by public service/utility commissions and that install, operate, and maintain electric supply (such as generation, transmission, or distribution systems) or communications systems (such as telephone, CATV, Internet, satellite, or data services). Utilities could be subject to compliance with codes and standards covering their regulated activities as adopted under governmental law or regulation. Additional information can be found through consultation with the governmental bodies, such as state regulatory commissions, the Federal Energy Regulatory Commission, and the Federal Communications Commission.~~

Additional Proposed Changes

File Name	Description	Approved
Does_NFPA_70_NEC_and_NFPA_70E_Add_Electrical_Safety_Value_to_Electric_Utilities.pdf	Does NFPA 70 NEC and NFPA 70E Add Electrical Safety	

Value to Electric Utilities

Statement of Problem and Substantiation for Public Input

Statement of Problem

Article 90.2(2)(5) exempts installations under the exclusive control of an electric utility, including service drops, service laterals, metering equipment, and associated infrastructure from the requirements of the National Electrical Code. The accompanying Informational Note reinforces this exemption by directing readers to alternative utility industry standards as putative substitutes for NEC coverage.

This exemption is technically unsubstantiated, ownership-based rather than hazard-based, and directly contrary to the stated purpose of the Code under 90.2(1): the practical safeguarding of persons and property from hazards arising from the use of electricity. The electrical hazards presented by utility-controlled equipment like conductor failure, inadequate insulation, deficient grounding and bonding, and energized enclosures accessible to the public, are physically identical to the hazards the NEC addresses on the premises side of the service point. Those hazards do not change character because the equipment is owned by a utility rather than a property owner.

Peer-reviewed research published by the IEEE confirms this structural problem. In the attached document "Does NFPA 70 (NEC) and NFPA 70E Add Electrical Safety Value to Electric Utilities" (IEEE Electrical Safety Workshop 2024, Paper No. ESW-2024-03), George T. Cole, CESCP, of the Palo Verde Nuclear Generating Station documents in detail that the NEC's "not covered" designation for utility-controlled installations means that safety value is being systematically withheld from precisely the locations and workers who need it. The Cole paper demonstrates that common industrial electrical equipment inside electric generation plants like switchgear, motor control centers, panelboards, switchboards, battery banks, inverters, branch circuit receptacles, and temporary power installations is physically identical to the equipment the NEC governs elsewhere, yet operates outside NEC jurisdiction solely by virtue of ownership.

The exemption produces two documented categories of public harm. First, utility distribution and transmission equipment operating outside NEC jurisdiction has been the direct ignition source of catastrophic wildfires, including events resulting in mass casualties and the destruction of entire communities. NEC requirements governing conductor integrity, clearances, and insulation ratings, requirements that do not apply to exempt utility equipment, exist precisely to prevent such failures. Second, utility-controlled equipment including metering enclosures, pad-mounted transformers, and underground junction boxes are routinely installed in locations physically accessible to members of the public, including children, without the shock-protection requirements the NEC imposes on all comparable premises-side equipment.

The Informational Note compounds the problem by implying that NESC (ANSI C2) coverage provides equivalent public protection. It does not. The Cole paper provides systematic, point-by-point technical documentation of the gap between NESC and NEC protections across multiple safety domains, establishing that reliance on the NESC as a substitute for NEC coverage is not technically defensible. The Informational Note therefore creates a false equivalence that obscures the gap in public protection and provides no technical basis for the exemption.

Substantiation

The exemption at 90.2(2)(5) cannot be sustained on technical grounds for the following reasons:

1. The exemption is ownership-based, not hazard-based. No technical analysis has been published by NFPA or any utility standards body demonstrating that the hazards present at utility-controlled installations are materially different from those the NEC addresses on the premises side of the service point. The service point is an administrative boundary and not a technical or a hazard based boundary. As Cole (2024) demonstrates, the electrical equipment found inside generation plants like panelboards, MCCs, switchgear, motors, battery banks, inverters, and receptacle outlets is identical in type, voltage, and hazard profile to the equipment the NEC governs in large industrial facilities. The Cole paper states directly: "It does not make sense to use different standards or codes to address the exact same hazard based on the industry or location of the electrical equipment. If the hazard to workers is the same, then the actions to protect the worker should be the same." Electrical hazards at and adjacent to the service interface are continuous across that boundary and must be treated as such.

2. The NESC does not provide equivalent public protection. ANSI C2 addresses utility system construction

and worker safety oriented toward transmission and distribution infrastructure. It does not provide the granular shock-protection, grounding, bonding, insulation, and inspection requirements that the NEC imposes for the protection of untrained members of the public who may encounter energized equipment. The Cole paper documents this gap across multiple specific safety domains:

On GFCI protection:
The NEC has mandated GFCI protection since 1971 and currently requires it for all permanent branch circuit receptacles at 125V through 250V, single-phase, 50 amperes or less, in fifteen categories of non-dwelling locations. The NESC, by contrast, did not require any GFCI protection prior to its 2023 edition, and its 2023 mandate extends only to 120VAC permanent receptacles in wet and damp locations. Cole documents that GFCI requirements in the NEC have produced an 80 percent reduction in overall electrocutions and a 93 percent reduction in consumer product electrocutions since their introduction, a documented public safety outcome the NESC has not replicated. Moreover, Cole establishes that utilities, despite their nominally favorable raw injury numbers, consistently show higher Days Away and Restricted and Transferred (DART) rates for electrical injuries and electrical burns than other industries when normalized per 10,000 full-time workers, a persistent disparity consistent with inadequate implementation of NEC and NFPA 70E standards.

On arc flash protection:
The NEC and NFPA 70E provide substantially more comprehensive arc flash protection requirements including incident energy analysis, arc flash boundary determination, prescriptive PPE requirements covering all parts of the body, and mandatory informational labeling on energized equipment than either OSHA 1910.269 or the NESC, which contain multiple exceptions permitting exposures above safe thresholds and do not require arc flash boundary determinations to protect other workers in the area.

On branch circuit definitions and load calculations:
The NESC uses the term "branch circuit" only once, without a technical definition, and has no provisions equivalent to NEC Articles 210, 215, or 220 governing branch circuits, feeders, and load calculations. Utility installations that are identical in equipment type to NEC-covered industrial facilities operate without these fundamental protective provisions solely by virtue of the ownership exemption.
Critically, the NESC's own definitional framework acknowledges the primacy of the NEC for equipment on the load side of the service point. The NESC definition of "Utilization Equipment" contains a clarifying note stating: "Utilization equipment and premises wiring on the load side of the service point is intended to be performed under the NEC, regardless of whether a utility has exclusive control." The exemption at 90.2(2)(5) is therefore in tension with the NESC's own stated intent.

3. Documented harm is directly attributable to the exemption. Regulatory findings by the California Public Utilities Commission and other investigative bodies have established that utility distribution equipment exempt from NEC requirements under 90.2(2)(5) was the ignition source of multiple catastrophic wildfire events causing mass casualties and large-scale destruction of property. The exemption forecloses the application of NEC conductor and equipment standards that would materially reduce ignition risk, particularly in wildland-urban interface zones.

4. The service point boundary is not technically fixed. The Cole paper documents that under NESC definitions, the service point "is not a fixed point but rather something that's fluid and transient based on the electric utility determination." Exact locations vary from utility to utility and from occupancy to occupancy. An ownership-based exemption anchored to an administratively variable boundary cannot provide consistent public protection. The practical effect is that identical equipment, presenting identical hazards, may be NEC-covered or NEC-exempt depending on a utility's unilateral designation of the service point location, a result incompatible with the Code's stated purpose of practical safeguarding.

5. The exemption creates an unacceptable gap at the service interface for emerging interactive systems. As distributed energy resources, Plug-In Photovoltaic (PIPV) appliances, equipment and systems, and bidirectional grid-interactive equipment proliferate, the service point has become a location of increasing electrical complexity and novel hazards. The categorical exemption of utility-controlled equipment at this interface prevents the NEC's protective framework from addressing precisely the configurations where new risk is concentrated and where premises-side and utility-side equipment interact in ways the existing exemption did not anticipate. The Cole paper's documentation of inverter and battery system installations within generation plants as operating outside NEC jurisdiction reinforces this concern: as inverter-based resources become ubiquitous on both sides of the service point, the ownership-based exemption creates a structural gap in exactly the interactive zone where NEC protections are most needed.

6. The Informational Note must be struck independently. Even if the Technical Committee declines to strike the current utility exemption in full for some reason, the Informational Note must be deleted. An Informational Note that affirmatively directs code users toward a standard that does not provide equivalent

public protection actively undermines the safety purpose of the Code. Per the NEC Style Manual, Informational Notes shall not expand or restrict the application of Code requirements. This Note effectively does both by implying that NESC coverage satisfies the public-protection objectives of the NEC where it demonstrably does not. The Cole paper's systematic comparison of NESC and NEC provisions across GFCI protection, arc flash, branch circuit requirements, and lockout/tagout practices confirms that the equivalence implied by the Informational Note is not technically supportable.

7. AHJ oversight represents proven public safety value that utilities should not be exempt from. If permit review by AHJs and their staff demonstrably increases public safety across all other sectors of electrical installation and the Code's adoption framework presumes that it does. There is no technical basis for exempting utility-controlled installations from equivalent oversight. The Cole paper's injury data showing persistently elevated DART rates in utilities compared to construction and general private industry is consistent with the absence of the AHJ inspection and permit review framework that the NEC imposes elsewhere.

Action Requested: Strike 90.2(2)(5) in its entirety, including the associated Informational Note, and direct the appropriate Technical Committees to develop scope language ensuring continuity of NEC-level public protection across the utility/premises boundary.

Supporting Reference: George T. Cole, CESCP, CESW, CUSP, "Does NFPA 70 (NEC) and NFPA 70E Add Electrical Safety Value to Electric Utilities?", IEEE Electrical Safety Workshop 2024, Paper No. ESW-2024-03. DOI: 10.1109/ESW52258.2024.10752770. Downloaded from IEEE Xplore, April 7, 2026, under license to Pacific Northwest National Laboratory.

Submitter Information Verification

Submitter Full Name: Achim Ginsberg-Klemmt
Organization: GismoPower LLC
Street Address:
City:
State:
Zip:

Submittal Date: Tue Mar 31 22:38:58 EDT 2026
Committee: NEC-AAC

Copyright Assignment

I, Achim Ginsberg-Klemmt, hereby irrevocably grant and assign to the National Fire Protection Association (NFPA) all and full rights in copyright in this Public Input (including both the Proposed Change and the Statement of Problem and Substantiation). I understand and intend that I acquire no rights, including rights as a joint author, in any publication of the NFPA in which this Public Input in this or another similar or derivative form is used. Except to the extent that I may lack authority to make an assignment of content identified above, I hereby warrant that I am the author of this Public Input and that I have full power and authority to enter into this copyright assignment.

☑ By checking this box I affirm that I am Achim Ginsberg-Klemmt, and I agree to be legally bound by the above Copyright Assignment and the terms and conditions contained therein. I understand and intend that, by checking this box, I am creating an electronic signature that will, upon my submission of this form, have the same legal force and effect as a handwritten signature

Origin (from sources other than the submitter)

The undersigned attests that the technical substance of this Public Input derives from GismoPower LLC's engineering work, field deployment experience, and standards engagement with UL Solutions, NFPA and PNNL. Artificial intelligence tools were used to assist in drafting and formatting. The submitter accepts full responsibility for the accuracy and completeness of all technical content and certifies compliance with NFPA's AI policy (AI_Policy_04_2025).

Public Input No. 3237-NFPA 70-2026 [Definition: Electric Vehicle (EV).]

Electric Vehicle (EV).

~~An automotive-type vehicle for on-road use, such as~~

Electric Vehicle (EV). A motor vehicle manufactured primarily for use on public streets, roads, and highways, driven or drawn by mechanical power, and equipped with a rechargeable storage battery, fuel cell, photovoltaic array, or other source of electric current. Electric vehicles include passenger automobiles, buses, trucks, vans, neighborhood electric vehicles,

~~and~~

electric motorcycles,

~~primarily powered by an electric motor that draws current from a rechargeable storage battery, fuel cell,~~

and unpropelled vehicles including trailers equipped with a photovoltaic array, energy storage system, or other source of electric current.

~~Plug~~

A plug -in hybrid electric

~~vehicles (PHEV) are electric vehicles~~

vehicle is an electric vehicle having a

~~second~~

secondary source of motive power.

~~(CMP-12)~~

~~Informational Note: Off-road, self-propelled electric mobile machines, such as industrial trucks, hoists, lifts, transports, golf carts, airline ground support equipment, tractors, and boats are not considered electric vehicles.~~

An electric vehicle shall be permitted to supply electric power to the premises wiring system or to the electric utility system by means of listed electric vehicle power export equipment or a listed plug-in photovoltaic electric vehicle power exchange system.

Informational Note No. 1: Federal law defines motor vehicles at 49 U.S.C. § 30102(a)(8) as vehicles driven or drawn by mechanical power primarily to be used on public streets, roads, and highways, excluding vehicles operated solely on rail. Unpropelled vehicles, including trailers equipped with photovoltaic modules or energy storage systems and certified in accordance with applicable federal motor vehicle safety standards, satisfy this statutory definition and are subject to federal vehicle safety requirements.

Informational Note No. 2: A plug-in photovoltaic system, as defined in Article 100, connects to the premises wiring system by means of a cord-and-plug connection and is not classified as an electric vehicle for purposes of this Code. Requirements for cord-and-plug-connected electric power production sources are addressed in Article 705, Part IV.

Informational Note No. 3: Requirements for equipment that transfers electric power from an electric vehicle to a premises wiring system or to the electric utility system are addressed in Article 625, Part VII. Where such transfer is accomplished by means of a plug-in photovoltaic electric vehicle power exchange system, see also Article 705, Part IV.

Additional Proposed Changes

File Name	Description	Approved
US_12_570_173_B2-VehicularElectricityGeneratingCanopyAppliance.pdf	US-Patent: Vehicular Electricity Generating Canopy Appliance	
US_2026-00228848-A1-TrailerableElectricityGeneratingCanopyAppliance.pdf	US 2026-00228848-A1-Trailerable Electricity Generating Canopy Appliance	
USCODE-2023-title49-subtitleVI-partA-chap301-subchapI-sec30102.pdf	USCODE Title49 SubtitleVI PartA Chapter 301 SubchapterI Section 301002	

Statement of Problem and Substantiation for Public Input

Statement of Problem and Substantiation

Federal law defines motor vehicle at 49 U.S.C. § 30102(a)(8) as a vehicle driven or drawn by mechanical power manufactured primarily for use on public streets, roads, and highways, excluding vehicles operated solely on a rail line. This statutory definition includes unpropelled vehicles, including trailers, as well as self-propelled vehicles. FMVSS and DOT-compliant trailers equipped with photovoltaic modules or energy storage systems satisfy this statutory definition and are subject to federal vehicle safety standards applicable to motor vehicles.

The current Article 100 definition of Electric Vehicle (EV) solely covers automotive-type vehicles with electric propulsion systems and does not address unpropelled vehicles equipped with photovoltaic modules or energy storage systems, nor does it address cord-and-plug-connected electric power production sources that connect to the premises wiring system by means of receptacle outlets instead of using a hardwired interconnection. These categories of equipment exist in the current market, satisfy applicable federal safety and road-worthiness standards where those standards apply, and are capable of supplying electric power to the premises wiring system or to the electric utility system. Neither category is addressable under any current NEC provision.

The absence of a NEC-recognized path for these product categories does not prevent their installation; it prevents their installation through certified, inspectable, code-compliant means. Products that satisfy rigorous federal safety standards remain without a compliant NEC installation pathway through no deficiency in their design or certification. Meanwhile, installations of uncertified plug-in solar and battery equipment operating outside any established safety framework continue to proliferate precisely because no compliant pathway exists.

Affirmative NEC provisions addressing both FMVSS/DOT-compliant trailerable PIPV systems and cord-and-plug-connected electric power production sources would establish an unambiguous safety framework applicable to an existing and growing product class and would create enforceable installation standards where none currently exist.

The Existing Informational Note Restricts the Application of the EV Definition

NEC STYLE MANUAL — MANDATORY GROUND FOR DELETION
NEC Style Manual, Section 2.2.2 (or equivalent current provision): “Informational Notes shall not be used to restrict or expand the application of Code requirements.”

The existing Informational Note violates this directive on its face and must be struck on Style Manual grounds alone, regardless of the Technical Committee’s disposition on the revised definition text. By declaring that specific categories of equipment are “not considered electric vehicles,” the Note directly restricts the application of the EV definition to exclude those categories. This is precisely the function the NEC Style Manual prohibits for Informational Notes. The operative scope of a Code definition, what falls within it and what does not, can only be established through properly adopted Code text subject to the full public input, public comment, and Technical Committee review process. It cannot be established through an Informational Note.

The distinction is not merely procedural. The Style Manual’s prohibition on scope-restricting Informational Notes exists because such notes alter legal obligations without the deliberative safeguards of the Code-making process. An AHJ, installer, or property owner reading a scope-restricting Informational Note may act in reliance on it as if it were Code text, because it appears in the Code and no contrary signal is provided. When that reliance is based on language that was never subjected to proper Technical Committee adoption, the result is an effective restriction on Code coverage achieved through an impermissible mechanism.

The Style Manual Violation Is Independent of the Revised Definition Text and exists independently of whether the Technical Committee adopts the revised definition text proposed in this Public Input. Even if the Technical Committee declines to adopt the revised main definition and retains the existing “automotive-type vehicle” language, the existing Informational Note must still be struck:

- If the Technical Committee retains the existing definition text, the Informational Note’s off-road exclusion list restricts that definition’s application by negative enumeration. That restriction belongs in the definition text itself if it reflects a genuine scope determination not in an Informational Note.

- If the Technical Committee adopts the revised definition text, the Informational Note is additionally superseded: the revised definition’s affirmative statutory scope alignment (vehicles manufactured primarily for use on public streets, roads, and highways) already implicitly excludes off-road equipment without requiring a negative list.

- In either case, the Informational Note must be struck. The Technical Committee should therefore treat deletion of the Informational Note as a threshold action required at this cycle on Style Manual grounds, independent of its disposition on the main definition text.

The Existing Informational Note Also Fails as an Informational Note. A compliant Informational Note provides explanatory context, cross-references, or supplementary technical information without altering the operative scope of a provision. The three new Informational Notes proposed in this Public Input are examples of compliant usage: they cite the federal statutory basis for the definition (IN No. 1), clarify the classification boundary between PIPV systems and EVs without altering either definition (IN No. 2), and cross-reference the applicable Article 625 and Article 705 provisions (IN No. 3). None of those Notes restricts or expands what falls within the EV definition or any other Code requirement.

The existing Note does the opposite. Its statement that specified equipment categories “are not considered electric vehicles” is a scope determination. It tells code users what the EV definition covers and does not cover. That function belongs in the definition’s operative text. The fact that this scope determination was placed in an Informational Note rather than in the definition text does not make it a proper Informational Note; it makes it an improperly placed restriction that must be corrected.

There is no loss of substantive coverage resulting from the deletion. The Informational Note does not remove off-road equipment from the EV definition’s scope in a way that creates new compliance obligations. Off-road self-propelled electric vehicles like industrial trucks, hoists, golf carts, agricultural tractors, and marine vessels are governed by other applicable NEC provisions and product standards and are not brought within Article 625 requirements by the deletion of a restrictive Informational Note. Their exclusion from the EV definition is properly established by the revised definition’s affirmative statutory scope language, which limits coverage to vehicles manufactured primarily for use on public streets, roads, and highways. That is the correct mechanism for a scope limitation: operative definition text adopted through the proper Code-making process, not a restrictive Informational Note.

Related Public Inputs for This Document

Related Input	Relationship
Public Input No. 2574-NFPA 70-2026 [New Definition after Definition: Scope.]	
Public Input No. 3251-NFPA 70-2026 [New Definition after Definition: Scope.]	

Submitter Information Verification

Submitter Full Name: Achim Ginsberg-Klemmt
Organization: GismoPower LLC
Street Address:
City:
State:
Zip:

Submittal Date: Wed Apr 08 15:18:07 EDT 2026
Committee: NEC-AAC

Copyright Assignment

I, Achim Ginsberg-Klemmt, hereby irrevocably grant and assign to the National Fire Protection Association (NFPA) all and full rights in copyright in this Public Input (including both the Proposed Change and the Statement of Problem and Substantiation). I understand and intend that I acquire no rights, including rights as a joint author, in any publication of the NFPA in which this Public Input in this or another similar or derivative form is used. Except to the extent that I may lack authority to make an assignment of content identified above, I hereby warrant that I am the author of this Public Input and that I have full power and authority to enter into this copyright assignment.

☑ By checking this box I affirm that I am Achim Ginsberg-Klemmt, and I agree to be legally bound by the above Copyright Assignment and the terms and conditions contained therein. I understand and intend that, by checking this box, I am creating an electronic signature that will, upon my submission of this form, have the same legal force and effect as a handwritten signature

Origin (from sources other than the submitter)

The undersigned attests that the technical substance of this Public Input derives from GismoPower LLC's engineering work, field deployment experience, and standards engagement with UL Solutions, NFPA and PNNL. Artificial intelligence tools were used to assist in drafting and formatting. The submitter accepts full responsibility for the accuracy and completeness of all technical content and certifies compliance with NFPA's AI policy (AI_Policy_04_2025).

Public Input No. 2574-NFPA 70-2026 [New Definition after Definition: Scope.]

Plug-In Photovoltaic Electric Vehicle Power Exchange System

A system that integrates a photovoltaic system and electric vehicle power export equipment in a single unit, connected to the premises wiring system by means of a cord-and-plug connection to a receptacle outlet and interfacing with an electric vehicle by means of electric vehicle power export equipment. A plug-in photovoltaic electric vehicle power exchange system is capable of supplying premises loads, transferring electric power in both directions between the electric vehicle and the premises wiring system, exporting electric power to the electric utility system, or any combination thereof.

Informational Note No. 1: A plug-in photovoltaic electric vehicle power exchange system is a cord-and-plug-connected electric power production source in accordance with Article 705, Part III.

Informational Note No. 2: The electric vehicle power export equipment integrated in a plug-in photovoltaic electric vehicle power exchange system is subject to the requirements of Article 625, Part VII. The photovoltaic system is subject to the requirements of Article 690 and Article 705, Part III.

Additional Proposed Changes

File Name	Description	Approved
US_12_570_173_B2-VehicularElectricityGeneratingCanopyAppliance.pdf	US 12,570,173_B2 Vehicular Electricity Generating Canopy Appliance	
US_2026-00228848-A1-TrailerableElectricityGeneratingCanopyAppliance.pdf	US 2026-00228848-A1 Trailerable Electricity Generating Canopy Appliance	

Statement of Problem and Substantiation for Public Input

There is currently no definition of a Plug-In Photovoltaic Electric Vehicle Power Exchange System in Article 100 or anywhere else in the 2026 NEC. Absent a defined term, authorities having jurisdiction (AHJs) lack a codified classification to reference on permit documentation. An implicit inclusion that cannot be formally cited is, in practice, no inclusion at all.

Related Public Inputs for This Document

Related Input	Relationship

Public Input No. 2538-NFPA 70-2026 [New Part after III.]

Public Input No. 3251-NFPA 70-2026 [New Definition after Definition: Scope.]

Submitter Information Verification

Submitter Full Name: Achim Ginsberg-Klemmt

Organization: GismoPower LLC

Street Address:

City:

State:

Zip:

Submittal Date: Fri Apr 03 19:04:18 EDT 2026

Committee: NEC-AAC

Copyright Assignment

I, Achim Ginsberg-Klemmt, hereby irrevocably grant and assign to the National Fire Protection Association (NFPA) all and full rights in copyright in this Public Input (including both the Proposed Change and the Statement of Problem and Substantiation). I understand and intend that I acquire no rights, including rights as a joint author, in any publication of the NFPA in which this Public Input in this or another similar or derivative form is used. Except to the extent that I may lack authority to make an assignment of content identified above, I hereby warrant that I am the author of this Public Input and that I have full power and authority to enter into this copyright assignment.

☑ By checking this box I affirm that I am Achim Ginsberg-Klemmt, and I agree to be legally bound by the above Copyright Assignment and the terms and conditions contained therein. I understand and intend that, by checking this box, I am creating an electronic signature that will, upon my submission of this form, have the same legal force and effect as a handwritten signature

Origin (from sources other than the submitter)

The undersigned attests that the technical substance of this Public Input derives from GismoPower LLC's engineering work, field deployment experience, and standards engagement with UL Solutions, NFPA and PNNL. Artificial intelligence tools were used to assist in drafting and formatting. The submitter accepts full responsibility for the accuracy and completeness of all technical content and certifies compliance with NFPA's AI policy (AI_Policy_04_2025).

Public Input No. 3251-NFPA 70-2026 [New Definition after Definition: Scope.]

Plug-In Photovoltaic (PIPV) System

Plug-In Photovoltaic (PIPV) System. A photovoltaic power production system connected to a premises wiring system by means of a cord-and-plug connection to a receptacle outlet, capable of supplying power to premises loads, exporting power to the electric utility system, or both.

Informational Note: Installation requirements for plug-in photovoltaic systems are found in Article 705, Part III.

Additional Proposed Changes

File Name	Description	Approved
US_12_570_173_B2-VehicularElectricityGeneratingCanopyAppliance.pdf	US 12,570,173 B2 Vehicular Electricity Generating Canopy Appliance US 2026-00228848	

US_2026-00228848-A1-TrailerableElectricityGeneratingCanopyAppliance.pdf	A1 Trailerable Electricity Generating Canopy Appliance
2023-07-6-MEGA_Preliminary_Report_Project_Number_4790844670.pdf	UL-Solutions: Preliminary Report
2023-08-28-UL-LetterOfCommittment.pdf	UL-Solutions: Letter of Commitment
2024-06-20-Gismo_Power_Mega_phase_1_close_out_letter_for_4790844670_062024.pdf	UL-Solutions: Closeout Letter

Statement of Problem and Substantiation for Public Input

No definition of a Plug-In Photovoltaic (PIPV) system currently exists in Article 100 or anywhere in the 2026 NEC. AHJs have no recognized category to cite on a permit without a definition. An implicit inclusion that cannot be cited is functionally no inclusion at all

Related Public Inputs for This Document

Related Input	Relationship
Public Input No. 2574-NFPA 70-2026 [New Definition after Definition: Scope.]	
Public Input No. 3237-NFPA 70-2026 [Definition: Electric Vehicle (EV).]	
Public Input No. 2538-NFPA 70-2026 [New Part after III.]	
Public Input No. 2541-NFPA 70-2026 [New Section after 705.12(B)]	
Public Input No. 2543-NFPA 70-2026 [New Section after 705.20(G)]	
Public Input No. 2544-NFPA 70-2026 [New Section after 705.10]	
Public Input No. 2546-NFPA 70-2026 [New Section after 705.12(B)]	
Public Input No. 2548-NFPA 70-2026 [New Section after 705.81]	
Public Input No. 2549-NFPA 70-2026 [New Section after 690.31(G)]	
Public Input No. 2551-NFPA 70-2026 [New Section after 625.102]	

Submitter Information Verification

Submitter Full Name: Achim Ginsberg-Klemmt
Organization: GismoPower LLC
Street Address:
City:
State:
Zip:

Submittal Date: Wed Apr 08 16:00:20 EDT 2026
Committee: NEC-AAC

Copyright Assignment

I, Achim Ginsberg-Klemmt, hereby irrevocably grant and assign to the National Fire Protection Association (NFPA) all and full rights in copyright in this Public Input (including both the Proposed Change and the Statement of Problem and Substantiation). I understand and intend that I acquire no rights, including rights as a joint author, in any publication of the NFPA in which this Public Input in this or another similar or derivative form is used. Except to the extent that I may lack authority to make an assignment of content identified above, I hereby warrant that I am the author of this Public Input and that I have full power and

authority to enter into this copyright assignment.

☑ By checking this box I affirm that I am Achim Ginsberg-Klemmt, and I agree to be legally bound by the above Copyright Assignment and the terms and conditions contained therein. I understand and intend that, by checking this box, I am creating an electronic signature that will, upon my submission of this form, have the same legal force and effect as a handwritten signature

Origin (from sources other than the submitter)

The undersigned attests that the technical substance of this Public Input derives from GismoPower LLC's engineering work, field deployment experience, and standards engagement with UL Solutions, NFPA and PNNL. Artificial intelligence tools were used to assist in drafting and formatting. The submitter accepts full responsibility for the accuracy and completeness of all technical content and certifies compliance with NFPA's AI policy (AI_Policy_04_2025).

Public Input No. 2551-NFPA 70-2026 [New Section after 625.102]

Trailer-, Canopy-, and Carport-Mounted Electric Vehicle Equipment

(A) Scope. This section applies to electric vehicle supply equipment and electric vehicle power export equipment mounted on freestanding photovoltaic trailers, canopies, or carports, including equipment integrated in a plug-in photovoltaic electric vehicle power exchange system as defined in Article 100.

(B) Installation. Electric vehicle supply equipment and electric vehicle power export equipment mounted on a freestanding photovoltaic trailer, canopy, or carport shall comply with all of the following:

(1) Equipment shall be listed for use in outdoor locations.

(2) Equipment enclosures and cable management shall provide protection against vehicle contact and environmental exposure appropriate to the installation location.

(3) The electric vehicle cable and connector shall be managed to prevent contact with ground surfaces or moving vehicles when not in use and shall be protected against physical damage.

(C) Connection to Premises Wiring. A plug-in photovoltaic electric vehicle power exchange system mounted on a freestanding photovoltaic trailer, canopy, or carport shall be permitted to connect to the premises wiring system by means of a cord-and-plug connection in accordance with Article 705, Part III.

(D) Bidirectional Systems. Where electric vehicle power export equipment mounted on a freestanding photovoltaic trailer, canopy, or carport is capable of exporting electric power to the premises wiring system or to the electric utility system, the following shall apply:

(1) The system shall comply with Article 625, Part VII.

(2) The connection to the premises wiring system shall comply with Article 705, Part III.

(3) Where the system is capable of exporting electric power to the electric utility system, notification to the serving electric utility shall be provided in accordance with 705.82(A).

(4) The rated output current of the electric vehicle power export equipment shall be included in the calculations required by 705.12(D)(4) and 705.12(E).

(E) Combined Systems. Where a plug-in photovoltaic electric vehicle power exchange system integrates a photovoltaic system and electric vehicle power export equipment in a listed assembly, the following shall apply:

(1) The photovoltaic system shall comply with Article 690 and Article 705, Part III.

(2) The electric vehicle power export equipment shall comply with Article 625, Part VII, and this section.

(3) The combined rated output current, including simultaneous photovoltaic generation and rated output current of the electric vehicle power export equipment, shall be included in the calculations required by 705.12(E).

Informational Note: A plug-in photovoltaic electric vehicle power exchange system, as defined in Article 100, combines electric vehicle power export equipment with a cord-and-plug-connected photovoltaic system in a listed assembly. The photovoltaic system is subject to Article 690 and Article

705, Part III. The electric vehicle power export equipment is subject to Article 625, Part VII. The cord-and-plug connection to the premises wiring system is subject to Article 705, Part III.

Additional Proposed Changes

File Name	Description	Approved
US_12_570_173_B2-VehicularElectricityGeneratingCanopyAppliance.pdf	US 12,570,173,B2 Vehicular Electricity Generating Canopy Appliance	
US_2026-00228848-A1-TrailerableElectricityGeneratingCanopyAppliance.pdf	US 2026-00228848-A1 Trailerable Electricity Generating Canopy Appliance	

Statement of Problem and Substantiation for Public Input

Article 625 addresses electric vehicle supply equipment and electric vehicle power export equipment in configurations that are pedestal-mounted or building-mounted. A combined plug-in photovoltaic electric vehicle power exchange system integrating trailer, canopy or carport-mounted electric vehicle power export equipment that connects to the premises wiring system by means of a cord-and-plug represents an installation topology that is not recognized by Article 625.

First, for bidirectional electric vehicle power export equipment subject to 625.179, Article 625 contains no provision for a trailer, canopy or carport-mounted unit that simultaneously interfaces with an electric vehicle by means of a charging cable and with the premises wiring system by means of a cord-and-plug connection.

Second, Article 625 contains no provision for electric vehicle supply equipment or electric vehicle power export equipment mounted on a freestanding photovoltaic trailer canopy or carport.

Third, export of electric power to the electric utility system from carport-mounted electric vehicle power export equipment has no cross-reference to the utility notification framework of 705, leaving the regulatory status of such export under this topology without an NEC-recognized pathway.

The integrated single-assembly design of a plug-in photovoltaic electric vehicle power exchange system one listed assembly performing photovoltaic generation, electric vehicle supply, and bidirectional electric power exchange represents a technically sound and commercially practical architecture. It minimizes installation complexity, reduces component count, and delivers the full capability of a combined photovoltaic and electric vehicle power exchange system through a single permitted installation. The absence of an NEC-recognized pathway for this topology is a code gap that this proposal is intended to address.

Related Public Inputs for This Document

Related Input	Relationship
Public Input No. 2422-NFPA 70-2026 [Definition: Electric Vehicle (EV).]	
Public Input No. 2426-NFPA 70-2026 [Definition: Electric Vehicle Power Export Equipment (EVPE).]	
Public Input No. 2538-NFPA 70-2026 [New Part after III.]	
Public Input No. 2541-NFPA 70-2026 [New Section after 705.12(B)]	
Public Input No. 2543-NFPA 70-2026 [New Section after 705.20(G)]	
Public Input No. 2544-NFPA 70-2026 [New Section after 705.10]	
Public Input No. 2546-NFPA 70-2026 [New Section after 705.12(B)]	
Public Input No. 2548-NFPA 70-2026 [New Section after 705.81]	
Public Input No. 2549-NFPA 70-2026 [New Section after 690.31(G)]	
Public Input No. 2574-NFPA 70-2026 [New Definition after Definition: Scope.]	
Public Input No. 3251-NFPA 70-2026 [New Definition after Definition: Scope.]	

Submitter Information Verification

Submitter Full Name: Achim Ginsberg-Klemmt
Organization: GismoPower LLC
Street Address:
City:
State:
Zip:
Submittal Date: Fri Apr 03 17:24:32 EDT 2026
Committee: NEC-AAC

Copyright Assignment

I, Achim Ginsberg-Klemmt, hereby irrevocably grant and assign to the National Fire Protection Association (NFPA) all and full rights in copyright in this Public Input (including both the Proposed Change and the Statement of Problem and Substantiation). I understand and intend that I acquire no rights, including rights as a joint author, in any publication of the NFPA in which this Public Input in this or another similar or derivative form is used. Except to the extent that I may lack authority to make an assignment of content identified above, I hereby warrant that I am the author of this Public Input and that I have full power and authority to enter into this copyright assignment.

☑ By checking this box I affirm that I am Achim Ginsberg-Klemmt, and I agree to be legally bound by the above Copyright Assignment and the terms and conditions contained therein. I understand and intend that, by checking this box, I am creating an electronic signature that will, upon my submission of this form, have the same legal force and effect as a handwritten signature

Origin (from sources other than the submitter)

The undersigned attests that the technical substance of this Public Input derives from GismoPower LLC's engineering work, field deployment experience, and standards engagement with UL Solutions, NFPA and PNNL. Artificial intelligence tools were used to assist in drafting and formatting. The submitter accepts full responsibility for the accuracy and completeness of all technical content and certifies compliance with NFPA's AI policy (AI_Policy_04_2025).

Public Input No. 2549-NFPA 70-2026 [New Section after 690.31(G)]

DC Wiring from Freestanding External Photovoltaic Structures

(A) General. Where a photovoltaic system is mounted on a freestanding structure that is not attached to or does not enclose a building, dc conductors from the photovoltaic array shall be permitted to connect to an inverter located on the exterior surface of an adjacent building wall or, where the conditions of 690.XX(C) are met, on the interior surface of an adjacent building wall.

(B) Rapid Shutdown. A photovoltaic system mounted on a freestanding structure that is not attached to or does not enclose a building shall not be required to comply with 690.12.

Informational Note: See 690.12(B)(1).

(C) Inverter Installed on Interior Surface of Building Wall. Where the inverter is mounted on the interior surface of an adjacent building wall, dc conductors shall be permitted to penetrate the building envelope where all of the following conditions are met:

(1) A listed disconnecting means, readily accessible, rated for the dc system voltage and current shall be installed on the exterior surface of the building wall at the point of penetration, ahead of the building envelope.

(2) dc conductors within the building envelope shall be installed in metallic raceway or in listed Type MC cable with a metallic sheath.

(3) dc arc-fault circuit interrupter protection complying with 690.11 shall be provided for all dc conductors within the building envelope.

(4) The inverter shall be installed at the first accessible location on the interior surface of the building wall so as to minimize the length of dc conductors within the building envelope.

(5) Output conductors from the inverter shall connect to the premises wiring system in accordance with Article 705, Part III.

(D) Inverter Installed on Exterior Surface of Building Wall. Where the inverter is mounted on the

exterior surface of an adjacent building wall, the following shall apply:

(1) dc conductors shall not be required to penetrate the building envelope.

(2) Output conductors from the inverter shall connect to the premises wiring system in accordance with Article 705, Part III.

(3) The inverter enclosure shall be listed for use in outdoor locations.

(4) dc conductors installed between the freestanding structure and the inverter shall be installed in accordance with 690.31(A) through (G), as applicable.

Informational Note: The disconnecting means required by 690.XX(C)(1) provides the required disconnecting means for dc conductors within the building envelope.

Additional Proposed Changes

File Name	Description	Approved
US2026-00228848-A1-TrailerableElectricityGeneratingCanopyAppliance.pdf	US2026-00228848-A1-Trailerable Electricity Generating Canopy Appliance	
US_12_570_173_B2-VehicularElectricityGeneratingCanopyAppliance.pdf	US 12,570,173 B2-Vehicular Electricity Generating Canopy Appliance	

Statement of Problem and Substantiation for Public Input

Freestanding Photovoltaic systems not attached to or enclosing a building are exempt from the rapid shutdown requirements of 690.12 pursuant to 690.12(B)(1). However, Article 690.31, which governs DC wiring methods for photovoltaic systems, contains no recognized installation pathway for DC conductors routed from a freestanding photovoltaic structure to an inverter located on or within an adjacent building. This gap leaves two common and technically legitimate installation configurations without an NEC-recognized pathway:

Pathway A: Inverter on Interior Surface of Building Wall: DC conductors make a short through-wall penetration to the inverter installed at the first accessible interior location on the building wall.

Pathway B: Inverter on Exterior Surface of Building Wall: DC conductors remain entirely external to the building envelope; only AC output conductors penetrate the structure to connect to the premises wiring system.

Both configurations are functionally comparable to installation practices already recognized in other sections of Article 690 for building-mounted systems, yet neither is currently addressable under any provision of 690.31 as applied to freestanding structures.

The proposed provision for Pathway A is not a relaxation of safety requirements. By requiring a listed disconnecting means at the point of building penetration and DC arc-fault circuit interrupter protection for all DC conductors within the building envelope, the proposed pathway imposes protection requirements that are more explicit than those currently applicable to analogous hardwired photovoltaic systems under existing Article 690 provisions, neither of which presently mandates this combination of protections as an affirmative installation requirement.

Related Public Inputs for This Document

Related Input	Relationship
Public Input No. 2405-NFPA 70-2026 [New Definition after Definition: Scope.]	
Public Input No. 2412-NFPA 70-2026 [New Definition after Definition: Scope.]	
Public Input No. 2422-NFPA 70-2026 [Definition: Electric Vehicle (EV).]	
Public Input No. 2426-NFPA 70-2026 [Definition: Electric Vehicle Power Export Equipment (EVPE).]	
Public Input No. 2538-NFPA 70-2026 [New Part after III.]	
Public Input No. 2541-NFPA 70-2026 [New Section after 705.12(B)]	

Public Input No. 2543-NFPA 70-2026 [New Section after 705.20(G)]
Public Input No. 2544-NFPA 70-2026 [New Section after 705.10]
Public Input No. 2546-NFPA 70-2026 [New Section after 705.12(B)]
Public Input No. 2548-NFPA 70-2026 [New Section after 705.81]

Submitter Information Verification

Submitter Full Name: Achim Ginsberg-Klemmt
Organization: GismoPower LLC
Street Address:
City:
State:
Zip:

Submittal Date: Fri Apr 03 16:48:56 EDT 2026
Committee: NEC-AAC

Copyright Assignment

I, Achim Ginsberg-Klemmt, hereby irrevocably grant and assign to the National Fire Protection Association (NFPA) all and full rights in copyright in this Public Input (including both the Proposed Change and the Statement of Problem and Substantiation). I understand and intend that I acquire no rights, including rights as a joint author, in any publication of the NFPA in which this Public Input in this or another similar or derivative form is used. Except to the extent that I may lack authority to make an assignment of content identified above, I hereby warrant that I am the author of this Public Input and that I have full power and authority to enter into this copyright assignment.

☑ By checking this box I affirm that I am Achim Ginsberg-Klemmt, and I agree to be legally bound by the above Copyright Assignment and the terms and conditions contained therein. I understand and intend that, by checking this box, I am creating an electronic signature that will, upon my submission of this form, have the same legal force and effect as a handwritten signature

Origin (from sources other than the submitter)

The undersigned attests that the technical substance of this Public Input derives from GismoPower LLC's engineering work, field deployment experience, and standards engagement with UL Solutions, NFPA and PNNL. Artificial intelligence tools were used to assist in drafting and formatting. The submitter accepts full responsibility for the accuracy and completeness of all technical content and certifies compliance with NFPA's AI policy (AI_Policy_04_2025).

Public Input No. 2544-NFPA 70-2026 [New Section after 705.10]

Labeling for Cord-and-Plug Connected Power Production Sources

Where a cord-and-plug-connected electric power production source is installed in accordance with 705.12(C), the following markings shall be provided:

(1) The dedicated receptacle outlet shall be field-marked with a permanent label indicating the circuit number, ampere rating, and voltage rating, and identifying the outlet as the designated connection point for a cord-and-plug-connected electric power production source.

(2) The service disconnecting means shall be field-marked with a permanent label indicating that one or more cord-and-plug-connected electric power production source circuits are present in the premises wiring system, identified by circuit number.

(3) The electric power production source shall be marked with a permanent factory-applied label in accordance with the applicable listed standard, UL 9741, UL 3700, or an equivalent standard applicable to cord-and-plug-connected electric power production sources.

Statement of Problem and Substantiation for Public Input

Section 705.10 requires permanent field-applied markings at service equipment and at each electric power production source. This requirement is technically incompatible with plug-in photovoltaic systems that are portable, seasonally relocated, or subject to disconnection and redeployment: service equipment markings cannot accurately reflect a source that is not permanently connected.

A static permanent label at the service equipment does not provide reliable information to emergency responders where the source may or may not be present. Marking content requirements, including warnings and electrical ratings, are within the scope of the applicable product standards like UL 9741 or UL 3700 and are established through the listing process. Section 705.10 appropriately governs marking location and installation requirements; it need not duplicate product-level marking content that is addressed by the listed standard.

Related Public Inputs for This Document

Related Input	Relationship
Public Input No. 2412-NFPA 70-2026 [New Definition after Definition: Scope.]	
Public Input No. 2422-NFPA 70-2026 [Definition: Electric Vehicle (EV).]	
Public Input No. 2426-NFPA 70-2026 [Definition: Electric Vehicle Power Export Equipment (EVPE).]	
Public Input No. 2538-NFPA 70-2026 [New Part after III.]	
Public Input No. 2541-NFPA 70-2026 [New Section after 705.12(B)]	
Public Input No. 2543-NFPA 70-2026 [New Section after 705.20(G)]	
Public Input No. 3251-NFPA 70-2026 [New Definition after Definition: Scope.]	

Submitter Information Verification

Submitter Full Name: Achim Ginsberg-Klemmt
Organization: GismoPower LLC
Street Address:
City:
State:
Zip:

Submittal Date: Fri Apr 03 16:11:56 EDT 2026
Committee: NEC-AAC

Copyright Assignment

I, Achim Ginsberg-Klemmt, hereby irrevocably grant and assign to the National Fire Protection Association (NFPA) all and full rights in copyright in this Public Input (including both the Proposed Change and the Statement of Problem and Substantiation). I understand and intend that I acquire no rights, including rights as a joint author, in any publication of the NFPA in which this Public Input in this or another similar or derivative form is used. Except to the extent that I may lack authority to make an assignment of content identified above, I hereby warrant that I am the author of this Public Input and that I have full power and authority to enter into this copyright assignment.

☑ By checking this box I affirm that I am Achim Ginsberg-Klemmt, and I agree to be legally bound by the above Copyright Assignment and the terms and conditions contained therein. I understand and intend that, by checking this box, I am creating an electronic signature that will, upon my submission of this form, have the same legal force and effect as a handwritten signature

Origin (from sources other than the submitter)

The undersigned attests that the technical substance of this Public Input derives from GismoPower LLC's engineering work, field deployment experience, and standards engagement with UL Solutions, NFPA and PNNL. Artificial intelligence tools were used to assist in drafting and formatting. The submitter accepts full responsibility for the accuracy and completeness of all technical content and certifies compliance with NFPA's AI policy (AI_Policy_04_2025).

Public Input No. 2541-NFPA 70-2026 [New Section after 705.12(B)]

Cord-and-Plug Connected Power Production Sources

A cord-and-plug-connected electric power production source shall be permitted to connect to the premises wiring system at a receptacle outlet where all of the following conditions are met:

(1) The rated output of the system does not exceed 60 amperes at 240 volts.

(2) The receptacle circuit overcurrent device is rated at not less than the next standard ampere rating above the rated output current of the source, in accordance with 240.6(A).

(3) The receptacle outlet is field-marked to identify it as the point of connection for a cord-and-plug-connected electric power production source.

(4) The sum of the overcurrent device ratings of all electric power production sources, including cord-and-plug-connected sources, does not exceed 120 percent of the panelboard or switchboard busbar rating.

(5) Bidirectional electric vehicle power transfer systems shall be calculated at their rated export current for the purposes of the calculation required by item (4).

(6) The system is listed in accordance with UL 9741, UL 3700, or an applicable standard for cord-and-plug-connected electric power production sources.

Additional Proposed Changes

File Name	Description	Approved
2023-07-6-MEGA_Preliminary_Report_Project_Number_4790844670.pdf	UL-Solutions: Preliminary Report Project 4790844670	
US_12_570_173_B2-VehicularElectricityGeneratingCanopyAppliance.pdf	US 12,570,173 B2-Vehicular Electricity Generating Canopy Appliance	
US_2026-00228848-A1-TrailerableElectricityGeneratingCanopyAppliance.pdf	US 2026-00228848-A1-Trailerable Electricity Generating Canopy Appliance	

Statement of Problem and Substantiation for Public Input

Article 705.12 governs points of connection for interconnected power production sources using the 120% rule, which is intended for permanently installed, hardwired systems. A cord-and-plug PIPV system lacks a fixed, labeled point of connection, provides no means for the AHJ to verify 120% compliance at the time of connection, and does not prevent the user from relocating the plug to a non-compliant circuit after approval. Bidirectional EV systems compatible with two-way power flow introduce additional complexity: utilities and AHJs often base V2H contributions on charging load rather than rated export capacity, resulting in a systematic underestimation that the proposed language aims to address and correct.

Related Public Inputs for This Document

Related Input	Relationship
Public Input No. 2405-NFPA 70-2026 [New Definition after Definition: Scope.]	
Public Input No. 2412-NFPA 70-2026 [New Definition after Definition: Scope.]	
Public Input No. 2422-NFPA 70-2026 [Definition: Electric Vehicle (EV).]	
Public Input No. 2426-NFPA 70-2026 [Definition: Electric Vehicle Power Export Equipment (EVPE).]	
Public Input No. 2538-NFPA 70-2026 [New Part after III.]	

Submitter Information Verification

Submitter Full Name: Achim Ginsberg-Klemmt
Organization: GismoPower LLC
Street Address:
City:
State:
Zip:
Submittal Date: Fri Apr 03 15:44:37 EDT 2026
Committee: NEC-AAC

Copyright Assignment

I, Achim Ginsberg-Klemmt, hereby irrevocably grant and assign to the National Fire Protection Association (NFPA) all and full rights in copyright in this Public Input (including both the Proposed Change and the Statement of Problem and Substantiation). I understand and intend that I acquire no rights, including rights as a joint author, in any publication of the NFPA in which this Public Input in this or another similar or derivative form is used. Except to the extent that I may lack authority to make an assignment of content identified above, I hereby warrant that I am the author of this Public Input and that I have full power and authority to enter into this copyright assignment.

☑ By checking this box I affirm that I am Achim Ginsberg-Klemmt, and I agree to be legally bound by the above Copyright Assignment and the terms and conditions contained therein. I understand and intend that, by checking this box, I am creating an electronic signature that will, upon my submission of this form, have the same legal force and effect as a handwritten signature

Origin (from sources other than the submitter)

The undersigned attests that the technical substance of this Public Input derives from GismoPower LLC's engineering work, field deployment experience, and standards engagement with UL Solutions, NFPA and PNNL. Artificial intelligence tools were used to assist in drafting and formatting. The submitter accepts full responsibility for the accuracy and completeness of all technical content and certifies compliance with NFPA's AI policy (AI_Policy_04_2025).

Public Input No. 2546-NFPA 70-2026 [New Section after 705.12(B)]

Aggregate Calculation for multiple Cord-and-Plug Connected Sources

Where more than one cord-and-plug-connected electric power production source is connected to the same panelboard or switchboard, the following shall apply:

(1) The sum of the rated output currents of all cord-and-plug-connected electric power production sources shall not exceed 40 percent of the panelboard or switchboard busbar ampere rating.

(2) Where the sum of the rated output currents exceeds 40 percent of the busbar ampere rating, a listed load management system approved by the authority having jurisdiction shall be installed to prevent the aggregate export current of all sources from simultaneously exceeding 40 percent of the busbar ampere rating.

(3) Bidirectional electric vehicle power transfer systems shall be calculated in accordance with 705.12(D)(5).

(4) The receptacle outlets serving cord-and-plug-connected electric power production sources shall be identified by circuit number on the panelboard or switchboard circuit directory.

Informational Note: A UL listing category for multi-source residential load management systems has not been established at the time of this edition. The authority having jurisdiction determines the acceptability of load management systems used to comply with (2).

Statement of Problem and Substantiation for Public Input

Neither the 2023 nor the 2026 NEC contains a provision addressing the simultaneous operation of a cord-and-plug-connected electric power production source and a bidirectional electric vehicle power transfer system connected to the same service or panelboard. The 120 percent rule was developed for a single

interconnected source and does not provide a methodology for calculating the aggregate contribution of two independent, concurrently operating backfeed sources. As bidirectional electric vehicle power transfer systems become more prevalent in residential installations alongside cord-and-plug-connected electric power production sources, the combined rated export current of both source types can exceed the busbar ampere rating of the serving panelboard with no current NEC methodology available to evaluate or approve such installations.

For example, on a 200-ampere service with a 200-ampere panel board busbar rating, a cord-and-plug-connected electric power production source rated at 60 amperes and a bidirectional electric vehicle power transfer system with a rated export current of 40 amperes requiring a 50-ampere circuit in accordance with 240.6(A) would produce an aggregate overcurrent protective device load of 200 amperes (service) plus 60 amperes plus 50 amperes, totaling 310 amperes. This exceeds the 240-ampere ceiling established by the 120 percent rule and cannot be evaluated under any existing NEC provision.

Related Public Inputs for This Document

Related Input	Relationship
Public Input No. 2405-NFPA 70-2026 [New Definition after Definition: Scope.]	
Public Input No. 2412-NFPA 70-2026 [New Definition after Definition: Scope.]	
Public Input No. 2422-NFPA 70-2026 [Definition: Electric Vehicle (EV).]	
Public Input No. 2426-NFPA 70-2026 [Definition: Electric Vehicle Power Export Equipment (EVPE).]	
Public Input No. 2538-NFPA 70-2026 [New Part after III.]	
Public Input No. 2541-NFPA 70-2026 [New Section after 705.12(B)]	
Public Input No. 2543-NFPA 70-2026 [New Section after 705.20(G)]	
Public Input No. 2544-NFPA 70-2026 [New Section after 705.10]	

Submitter Information Verification

Submitter Full Name: Achim Ginsberg-Klemmt
Organization: GismoPower LLC
Street Address:
City:
State:
Zip:

Submittal Date: Fri Apr 03 16:21:44 EDT 2026
Committee: NEC-AAC

Copyright Assignment

I, Achim Ginsberg-Klemmt, hereby irrevocably grant and assign to the National Fire Protection Association (NFPA) all and full rights in copyright in this Public Input (including both the Proposed Change and the Statement of Problem and Substantiation). I understand and intend that I acquire no rights, including rights as a joint author, in any publication of the NFPA in which this Public Input in this or another similar or derivative form is used. Except to the extent that I may lack authority to make an assignment of content identified above, I hereby warrant that I am the author of this Public Input and that I have full power and authority to enter into this copyright assignment.

☑ By checking this box I affirm that I am Achim Ginsberg-Klemmt, and I agree to be legally bound by the above Copyright Assignment and the terms and conditions contained therein. I understand and intend that, by checking this box, I am creating an electronic signature that will, upon my submission of this form, have the same legal force and effect as a handwritten signature

Origin (from sources other than the submitter)

The undersigned attests that the technical substance of this Public Input derives from GismoPower LLC's engineering work, field deployment experience, and standards engagement with UL Solutions, NFPA and PNNL. Artificial intelligence tools were used to assist in drafting and formatting. The submitter accepts full responsibility for the accuracy and completeness of all technical content and certifies compliance with NFPA's AI policy (AI_Policy_04_2025).

Public Input No. 2543-NFPA 70-2026 [New Section after 705.20(G)]

Plug as disconnecting means

For a cord-and-plug-connected electric power production source installed in accordance with 705.12(D), the cord-and-plug connection shall be permitted to serve as the required disconnecting means where all of the following conditions are met:

(1) The plug is accessible without the use of tools and is within sight of the inverter or power conversion equipment.

(2) The receptacle outlet is field-marked to identify the plug as the disconnecting means for the electric power production source.

(3) The system is listed in accordance with UL 9741, UL 3700, or an applicable standard for cord-and-plug-connected electric power production sources.

Statement of Problem and Substantiation for Public Input

Article 705.20 requires a readily accessible disconnecting means for each interconnected power production source. However, the 2026 NEC does not explicitly recognize a cord-and-plug connection as a compliant disconnecting means for such sources. In the absence of this recognition, AHJs often require an additional hardwired disconnect, effectively converting a plug-in appliance into a semi-permanent installation and undermining its portability. Articles 422 and 625 already recognize cord-and-plug connections as compliant disconnecting means for appliances and EV supply equipment, respectively; the same rationale applies to PIPV systems.

Related Public Inputs for This Document

Related Input	Relationship
Public Input No. 2405-NFPA 70-2026 [New Definition after Definition: Scope.]	
Public Input No. 2412-NFPA 70-2026 [New Definition after Definition: Scope.]	
Public Input No. 2422-NFPA 70-2026 [Definition: Electric Vehicle (EV).]	
Public Input No. 2426-NFPA 70-2026 [Definition: Electric Vehicle Power Export Equipment (EVPE).]	
Public Input No. 2538-NFPA 70-2026 [New Part after III.]	
Public Input No. 2541-NFPA 70-2026 [New Section after 705.12(B)]	

Submitter Information Verification

Submitter Full Name: Achim Ginsberg-Klemmt
Organization: GismoPower LLC
Street Address:
City:
State:
Zip:

Submittal Date: Fri Apr 03 15:58:11 EDT 2026
Committee: NEC-AAC

Copyright Assignment

I, Achim Ginsberg-Klemmt, hereby irrevocably grant and assign to the National Fire Protection Association (NFPA) all and full rights in copyright in this Public Input (including both the Proposed Change and the Statement of Problem and Substantiation). I understand and intend that I acquire no rights, including rights as a joint author, in any publication of the NFPA in which this Public Input in this or another similar or derivative form is used. Except to the extent that I may lack authority to make an assignment of content identified above, I hereby warrant that I am the author of this Public Input and that I have full power and

authority to enter into this copyright assignment.

☑ By checking this box I affirm that I am Achim Ginsberg-Klemmt, and I agree to be legally bound by the above Copyright Assignment and the terms and conditions contained therein. I understand and intend that, by checking this box, I am creating an electronic signature that will, upon my submission of this form, have the same legal force and effect as a handwritten signature

Origin (from sources other than the submitter)

The undersigned attests that the technical substance of this Public Input derives from GismoPower LLC's engineering work, field deployment experience, and standards engagement with UL Solutions, NFPA and PNNL. Artificial intelligence tools were used to assist in drafting and formatting. The submitter accepts full responsibility for the accuracy and completeness of all technical content and certifies compliance with NFPA's AI policy (AI_Policy_04_2025).

Public Input No. 2548-NFPA 70-2026 [New Section after 705.81]

Utility notification for cord-and-plug-connected power production sources

(A) Non-Export Systems. An electric power production source connected by means of a cord-and-plug connection and equipped with a listed inverter that, in accordance with UL 1741, prevents the export of electric power to the electric utility system shall not be required to obtain a utility interconnection agreement as a condition of compliance with this Code.

(B) Export-Capable Systems. An electric power production source connected by means of a cord-and-plug connection that is capable of exporting electric power to the electric utility system shall provide notification to the serving electric utility not later than 30 days after initial connection. Such notification shall not be required as a condition of connection under this Code. The form and content of the notification shall be determined by the serving electric utility.

Informational Note No. 1: Anti-islanding requirements for inverters used in cord-and-plug-connected electric power production sources are addressed in UL 9741 and UL 1741.

Informational Note No. 2: The notification required by (B) does not constitute an endorsement of any particular utility interconnection policy, tariff structure, or approval process.

Statement of Problem and Substantiation for Public Input

In the absence of a specific NEC 2026 provision addressing cord-and-plug-connected electric power production sources, electric utilities have required in practice full interconnection agreements for such systems, even where the system is listed to prevent export and functions as a load-offsetting source rather than a grid-interactive source.

This section establishes a minimum regulatory baseline distinguishing non-export systems from export-capable systems, reducing barriers to electric grid interconnection for listed non-export sources while preserving the right of the serving electric utility to receive notification of export-capable installations. The anti-islanding requirement of (B) references UL-1741, consistent with the UL product standard framework applicable to inverters and power conversion equipment addressed elsewhere in this proposal.

Related Public Inputs for This Document

Related Input	Relationship
Public Input No. 2412-NFPA 70-2026 [New Definition after Definition: Scope.]	
Public Input No. 2422-NFPA 70-2026 [Definition: Electric Vehicle (EV).]	
Public Input No. 2426-NFPA 70-2026 [Definition: Electric Vehicle Power Export Equipment (EVPE).]	
Public Input No. 2538-NFPA 70-2026 [New Part after III.]	
Public Input No. 2541-NFPA 70-2026 [New Section after 705.12(B)]	
Public Input No. 2543-NFPA 70-2026 [New Section after 705.20(G)]	
Public Input No. 2544-NFPA 70-2026 [New Section after 705.10]	

Public Input No. 2546-NFPA 70-2026 [New Section after 705.12(B)]

Public Input No. 3251-NFPA 70-2026 [New Definition after Definition: Scope.]

Submitter Information Verification

Submitter Full Name: Achim Ginsberg-Klemmt

Organization: GismoPower LLC

Street Address:

City:

State:

Zip:

Submittal Date: Fri Apr 03 16:37:04 EDT 2026

Committee: NEC-AAC

Copyright Assignment

I, Achim Ginsberg-Klemmt, hereby irrevocably grant and assign to the National Fire Protection Association (NFPA) all and full rights in copyright in this Public Input (including both the Proposed Change and the Statement of Problem and Substantiation). I understand and intend that I acquire no rights, including rights as a joint author, in any publication of the NFPA in which this Public Input in this or another similar or derivative form is used. Except to the extent that I may lack authority to make an assignment of content identified above, I hereby warrant that I am the author of this Public Input and that I have full power and authority to enter into this copyright assignment.

☑ By checking this box I affirm that I am Achim Ginsberg-Klemmt, and I agree to be legally bound by the above Copyright Assignment and the terms and conditions contained therein. I understand and intend that, by checking this box, I am creating an electronic signature that will, upon my submission of this form, have the same legal force and effect as a handwritten signature

Origin (from sources other than the submitter)

The undersigned attests that the technical substance of this Public Input derives from GismoPower LLC's engineering work, field deployment experience, and standards engineering with UL Solutions, NFPA and PNNL. Artificial intelligence tools were used to assist in drafting and formatting. The submitter accepts full responsibility for the accuracy and completeness of all technical content and certifies compliance with NFPA's AI policy (AI_Policy_04_2025).

Public Input No. 2538-NFPA 70-2026 [New Part after III.]

Cord-and-Plug-Connected Electric Power Production Sources

705.100 Scope. Part IV applies to photovoltaic systems, plug-in photovoltaic electric vehicle power exchange systems, and other electric power production sources connected to a premises wiring system by means of a cord-and-plug connection to a receptacle outlet, including systems capable of exporting electric power to the premises wiring system or to the electric utility system. Systems within the scope of this Part shall comply with Parts I and II of this article except as modified by this Part.

Additional Proposed Changes

File Name	Description	Approved
2023-07-6-MEGA_Preliminary_Report_Project_Number_4790844670.pdf	UL-Solutions: Preliminary Project Report 4790844670	
US_12_570_173_B2-VehicularElectricityGeneratingCanopyAppliance.pdf	US 12,570,173 B2-Vehicular Electricity Generating Canopy Appliance	
US_2026-00228848-A1-	US 2026-00228848-A1-Trailerable	

TrailerableElectricityGeneratingCanopyAppliance.pdf	Electricity Generating Canopy Appliance

Statement of Problem and Substantiation for Public Input

Article 705 addresses interconnected electric power production sources but does not establish a recognized category for cord-and-plug–connected sources. In the absence of a defined Part that formally recognizes cord-and-plug connections as a connection method, authorities having jurisdiction (AHJs) lack a clear code framework for evaluating PIPV permit applications.

Related Public Inputs for This Document

Related Input	Relationship
Public Input No. 2412-NFPA 70-2026 [New Definition after Definition: Scope.]	
Public Input No. 2422-NFPA 70-2026 [Definition: Electric Vehicle (EV).]	
Public Input No. 2426-NFPA 70-2026 [Definition: Electric Vehicle Power Export Equipment (EVPE).]	
Public Input No. 3251-NFPA 70-2026 [New Definition after Definition: Scope.]	

Submitter Information Verification

Submitter Full Name: Achim Ginsberg-Klemmt

Organization: GismoPower LLC

Street Address:

City:

State:

Zip:

Submittal Date: Fri Apr 03 15:32:16 EDT 2026

Committee: NEC-AAC

Copyright Assignment

I, Achim Ginsberg-Klemmt, hereby irrevocably grant and assign to the National Fire Protection Association (NFPA) all and full rights in copyright in this Public Input (including both the Proposed Change and the Statement of Problem and Substantiation). I understand and intend that I acquire no rights, including rights as a joint author, in any publication of the NFPA in which this Public Input in this or another similar or derivative form is used. Except to the extent that I may lack authority to make an assignment of content identified above, I hereby warrant that I am the author of this Public Input and that I have full power and authority to enter into this copyright assignment.

☑ By checking this box I affirm that I am Achim Ginsberg-Klemmt, and I agree to be legally bound by the above Copyright Assignment and the terms and conditions contained therein. I understand and intend that, by checking this box, I am creating an electronic signature that will, upon my submission of this form, have the same legal force and effect as a handwritten signature

Origin (from sources other than the submitter)

The undersigned attests that the technical substance of this Public Input derives from GismoPower LLC's engineering work, field deployment experience, and standards engagement with UL Solutions, NFPA and PNNL. Artificial intelligence tools were used to assist in drafting and formatting. The submitter accepts full responsibility for the accuracy and completeness of all technical content and certifies compliance with NFPA's AI policy (AI_Policy_04_2025).

Fraunhofer USA

Fraunhofer Center for Sustainable Energy Systems

Plug and Play PV Standards Portfolio

Prepared by: M. Kromer, C. Hoepfner

Date: August 1, 2016

© Fraunhofer USA 2016

Table of Contents

1 Plug & Play PV Standards Portfolio, Process and Document Overview 3

2 Plug & Play PV System Standard 3

2.1 Plug & Play PV System Certification Requirements 3

2.2 System Plan 4

2.3 Verification of Code Compliance 5

2.4 Proof of Compliance Reporting 7

2.5 Commissioning Protocol 7

2.6 System Certification Procedure 8

2.7 Plug & Play System Ratings 9

Documentation Summary 10

3 Plug & Play ePI&I Communication Standard 10

3.1 Plug & Play PV ePI&I Communication Standard Requirements 10

3.2 Plug & Play PV Application Programmer's Interface (API) 11

3.3 Plug & Play PV Data Models 11

4 Plug & Play Solar Connection Device Standard 11

Appendix 12

A1.1 Sub System Definitions 12

A1.2 System Plan Summary Template 13

A1.3 System Configuration Diagram 14

A1.4 System Specification Data Model Library 15

A1.5 Master Inspection Checklist 19

A1.6 Self Test Data Model Library 27

A1.7 Miscellaneous Data Models 30

A2.1 System Plan - Summary 32

A2.2 System Specification 33

A2.3 Code Compliance Plan 36

A2.4 Electronic Self-Test Report 40

A2.5 Visual Documentation Plan 42

Plug and Play PV Standards Portfolio

Version 1	7/10/2016	First publication
Version 1.1	8/01/2016	Modified description of SCD standard

1 Plug & Play PV Standards Portfolio, Process and Document Overview

The Plug and Play PV framework serves to promote the use of components, systems and processes which increase the ease of installation, standardize the proof of code compliance, and enable the introduction of electronic permitting, inspection and interconnection (ePI&I) processes for residential PV systems.

The Plug and Play PV Standards Portfolio describes the requirements for PV systems and communication devices to be listed as Plug & Play PV compliant, enabling them to participate in ePI&I processes. The portfolio comprises of the following standards:

- Plug & Play PV System Standard (Section 2)
- Plug & Play ePI&I Communication Standard (Section 3), supported by the
  - *Plug & Play PV API Technical Reference Manual (separate document)*
- Plug & Play Solar Connection Device Standard (Section 4)

The concepts behind the Plug and Play PV framework are further described in a separate White Paper.

2 Plug & Play PV System Standard

2.1 Plug & Play PV System Certification Requirements

2.1.1 A Plug & Play PV System shall satisfy the requirements identified in sections 2.2-2.5.

2.1.2 Plug & Play PV System Manufacturers shall provide documentation as identified in 2.2-2.4.

Informational Note: A summary of documentation requirements is included in Section 2.8. An illustrative example of a fully documented Plug & Play PV System is included in Appendix 2.

2.1.3 A Plug & Play PV System shall be certified by a Certification Provider according to procedures identified in Section 2.6.

2.2 System Plan

2.2.1 System Plan Requirements

The System Manufacturer shall define and document a standardized System Plan for the System to be certified. The System Plan shall consist of:

(1) A System Summary, per Section 2.2.1.1

(2) A System Configuration Diagram, per Section 2.2.1.2

(3) A System Specification, per Section 2.2.1.3

2.2.1.1 System Summary

The System Summary shall provide an overall description of the System to be Certified.

Informational Note: Guidelines for generating a System Summary are included in Appendix 1.2.

2.2.1.2 System Configuration Diagram

The System Configuration Diagram shall define the valid system configuration(s) for the System to be Certified. A system configuration consists of a defined assembly of Sub-Systems with a defined connection topology.

Informational Note: Guidelines for generating a System Configuration Diagram template are included in Appendix 1.3. The "valid system configurations" for a System to be Certified can be represented as a generalized single line diagram of the system that indicates the maximum and minimum number of each Sub-System. An example is provided in Appendix 2.[1]

Informational Note: A Sub-System is a discrete component or block of repeated discrete components that comprise a PV System. Examples of Sub-Systems include PV modules, cable assemblies, and inverters. Additional examples are identified and defined in Appendix 1.1.

2.2.1.3 System Specification

The System Specification shall include information described in (1) and (2):

(1) **System-Level Specification:** The System-Level Specification shall use an applicable System-level data model to define system-level specifications for the System Under Test that are fixed at the time of system certification.

(2) **Sub-System Specifications:** For each Sub-System identified in the System Configuration Diagram, the System Specification shall define all sub-system specifications that are fixed at the time of system certification using an applicable data model.

System-Level and Sub-System specifications shall be documented by utilizing an existing data model within the certification database, or a new data model developed as part of system certification that is associated with the relevant system or constituent sub-system.

---

[1] *Examples of configuration parameters include, for example, # of AC Modules in a branch circuit or number of branch circuits (for AC Module Systems); or # of PV modules or number of strings in a string inverter system.*

Informational Note: A reference library of System-Level and Sub-System data models are incorporated in Appendix 1.4.

2.3 Verification of Code Compliance

2.3.1 Code Compliance Plan

The System Manufacturer shall submit a Code Compliance Plan for the System to be Certified that satisfies the requirements of Section 2.3.1.1-2.3.1.4.

Informational Note: The Code Compliance Plan is a system-specific description of how the System to be Certified satisfies the requirements of the Plug & Play PV Standard for verifying compliance with the National Electric Code. It is derived from the Master Inspection Checklist, which is a library of verification requirements for a PV System; it includes requirements that must be satisfied at the system level, and requirements that must be satisfied for each instance of the Sub-Systems that comprise the System to be Certified. The Code Compliance Plan identifies, for the PV System as a whole, and for each instance of a Sub-System identified in the Standard Plan, how the relevant requirements defined in the Master Inspection Checklist are satisfied.

Informational Note: Example Code Compliance Plans are included as part of the example documentation package presented in Appendix 2.

2.3.1.1 Code Compliance Plan Documentation Requirements – General

The Code Compliance Plan shall be comprised of a list of requirements derived from the Master Inspection Checklist in accordance with the requirements of Section 2.3.1.2-2.3.1.4.

Informational Note: The Master Inspection Checklist is found in the Appendix 1.5.

2.3.1.2 Code Compliance Plan Documentation Requirements for Sub-Systems

For each *instance* of a Sub-System in the System Plan, the Code Compliance Plan shall document how each requirement in the Master Inspection Checklist is satisfied.

2.3.1.3 Code Compliance Plan Documentation Requirements for PV System

The Code Compliance Plan shall document how each system-level requirement in the Master Inspection Checklist is satisfied for the System to be Certified as a system. The system-level requirements shall correspond to the system type identified in the System Plan (e.g., AC Module, Microinverter, String Inverter).

2.3.1.4 Methodology for Compiling a Code Compliance Plan

Each requirement in the Code Compliance Plan shall be documented by identifying:

(1) The generally recognized method for proving code compliance (per section 2.3.3), and

(2) A detailed description of the specific approach adopted by the System Manufacturer for proving compliance.

(3) Requirements identified in the Code Compliance Plan that are verified by Electrical Self-Test, per 2.3.3(2), shall cross-reference to the Electronic Self-Test Report Data Model for the System to be Certified.

(4) Requirements identified in the Code Compliance Plan that are verified by Remote Visual Documentation, per 2.3.3(3), shall cross-reference to a list of required photographs.

2.3.2 Code Compliance Plan Implementation

The System to be Certified shall satisfy the requirements identified in the Code Compliance Plan for all valid system configurations using the method identified in the Compliance Plan.

The System Plan, defined per Section 2.2, shall be used to identify valid configurations and Sub-System specifications.

2.3.3 Recognized methods for satisfying Code Compliance Plan requirements

The following methods shall be permitted to satisfy Code Compliance Plan requirements:

(1) Verification by Design: A System to be Certified shall satisfy a Code Compliance Plan requirement by Design if (1) a system characteristic identified in the System Plan satisfies the identified requirement; and (2) the identified system characteristic is enforced at installation time by a clearly identified means.

Informational Note: Verification by design includes, for example, elimination of exposed metal from electrical system components to eliminate the need for equipment grounding conductors (implied by a manufacturer part # detected through a self-test), or use of a keyed connector that identifies a specific type of cable assembly has been used (implied by identification of upstream devices that use the mating connector). In general, Verification by Design is used to verify that the design parameters defined by the System Electrical Plan constitute a Code Compliant PV System.

(2) Verification by Electrical Self-Test. A System to be Certified shall satisfy a Code Compliance Plan requirement by Electrical Self-Test if (1) a commissioning application interrogates components of the as-built system or other external data sources to verify that the as-built system meets the identified requirement; and (2) it complies with the requirements of Section 2.4.1.

Informational Note: Example of Code Compliance Plan Requirements that may be satisfied by Electrical Self-Test include, for example, mapping of an as-built array to determine that the number of PV modules in a DC string or AC Modules in a branch circuit are within specified limits (e.g., max string voltage or max branch circuit current). In general, Verification by Electrical Self Test is expected to verify that the proper system components are detected in the as-built system and that they are connected properly.

(3) Verification by Remote Visual Documentation. A System Under Test shall satisfy a Code Compliance Plan Requirement by Remote Visual Documentation if (1) satisfaction of the identified requirement can be readily verified from a digital photograph or other optical recognition means of an as-built system; and (2) it complies with the requirements of Section 2.4.2.

Informational Note: In general, Remote Visual Documentation is expected primarily to verify factors such as workmanship. Code Compliance Plan Requirements that are met by Remote Visual Documentation are not validated by the System Under Test, but are reserved for requirements that may be remotely inspected with a high degree of confidence. Examples of Code Compliance Plan Requirements that may be satisfied with Remote Visual Documentation include, for example, presence of required plaques, Array layout, and cable management.

Remotely submitted visual documentation requires as part of the Inspection Submittal package, time and location-stamped photographs to provide evidence that the system has been installed correctly from a mechanical perspective.

(4) **Verification by Visual Inspection.** A Code Compliance Plan Requirement that does not meet the threshold for Verification By Design, Electrical Self-Test, or Remote Visual Documentation shall be identified as satisfying the Code Compliance Plan Requirement by Visual Inspection.

Informational Note: A Code Compliance Plan Requirement that is satisfied by Visual Inspection is not validated by the System Under Test, and is not easily verified through a remote inspection. Examples include connection of conductors to terminals blocks, or wiring into service panels.

2.4 Proof of Compliance Reporting

2.4.1 Electronic Self-Test Report

If the Code Compliance Plan identifies any requirements as satisfied by electronic self-test, the System to be Certified shall execute an electronic self-test that satisfies requirements (1)-(4):

(1) The electronic self-test shall verify that pre-installation regulatory approvals have been granted

(2) The electronic self-test shall address each requirement identified in the Code Compliance Plan as satisfied by electronic self-test.

(3) The System to be certified shall generate an Electronic Self-Test Report that documents the results of the electronic self-test. The Self-Test Report shall include results of the test as well as sufficient information to support calculations and results generated by the electronic self-test. The content and format of the Electronic Self-Test Report shall utilize defined Plug & Play data model guidelines, and shall be submitted by the manufacturer for the certification process for incorporation into the Plug & Play Data Model Library.

(4) The Electronic Self-Test Report shall be communicated to the Plug & Play Server.

Informational Note: The ePI&I Communications Standard defines the communications protocol for exchanging information with the Plug & Play PV Server

Informational Note: Electronic Self-Test Report data models are included in Appendix 1.6.

2.4.2 Narrative Test Report

The System Manufacturer shall provide a Narrative Test Report that can be auto-populated with results from the Electronic Self-Test Report.

Informational Note: The Narrative Test Report is intended to act as a human-readable summary description of the as-built system, including the overall system design concept and important results from the self-test.

2.5 Commissioning Protocol

(1) The System to be Certified shall complete steps (a)-(c) in sequence prior to exporting power on a sustained and continuous basis. “Sustained and continuous” shall be defined as exceeding the limits identified in (3).
   (a) The as-built system has linked to an existing Plug & Play PV project on the Plug & Play PV Server.
   (b) All required regulatory approvals have been granted for the Plug & Play PV Project.
   (c) Following receipt of regulatory approvals, the Installer provides authorization for the system to complete interconnection and begin exporting power.

(2) The System to be Certified shall signal completion of the commissioning process for the Plug & Play PV Project to the Plug & Play Server.

(3) The System to be Certified shall be permitted to export power on a temporary basis for the purposes of testing the system during installation. Power export during test mode shall automatically cease after a period of 30 minutes.

Informational Note: Data is exchanged with the Plug & Play PV Server using communication protocols identified in the Plug & Play ePI&I Communications Standard (Section 3).

2.6 System Certification Procedure

The Certification Provider shall ascertain compliance with the Plug & Play PV System Standard by following procedures outlined in 2.6.1-2.6.5.

2.6.1 Audit of System Design Package

The Certification Provider shall conduct an audit of the system design package to ascertain completeness and consistency. As part of the design audit, the Certification Provider shall: (1) ascertain that all required documentation has been completed and meets the requirements identified in Sections 2.2-2.4; (2) that all components identified within the System Plan are appropriate for the identified purpose; (3) that the valid system configurations defined by the System Plan comprise a code compliant system; and (4) that the proposed system design concept satisfies the requirements for certification of a Plug & Play PV System Sections 2.2-2.5.

2.6.2 Field Assessment

The Certification Provider shall conduct a comprehensive set of experiments on a sample system of a maximal configuration of the System to be Certified to ascertain that an as-built system satisfies the requirements for certification of a Plug & Play PV System Sections 2.2-2.5. Specifically, the field assessment shall verify test criteria (1)-(4)

(1) **Verification of Code Compliance:** Verifies that the System to be Certified meets each line item in described in the Code Compliance Verification Plan (i.e., verify compliance across the system's full design envelope, and, conversely, to verify that the system does not function if this design envelope is violated.)

(2) Proof of Compliance Reporting: Verifies the completeness, accuracy, and reporting of the results of the electronic self-test

(3) Compliance with the Commissioning Protocol: Verifies that the System to be Certified initiates power export in line with the requirements of the Commissioning Protocol.

2.6.3 Audit of Factory Acceptance Test

The Certification Provider shall review and audit the manufacturer's process for ensuring the integrity of the factory acceptance testing procedures.

2.6.4 Ratings Assessment

The Certification Provider shall assign ratings to Sub-Systems per Section 2.7.

2.6.5 Documentation

The Certification Provider shall register applicable system documentation on the Plug & Play Server in a system certification database. System documentation shall include the approved System Plan, the Code Compliance Plan, and a Certificate of Compliance report. As necessary, the Certification Provider shall update the existing data model libraries on the server to incorporate any new data models generated during the certification process.

2.7 Plug & Play System Ratings

Each sub-system identified in the System Plan shall receive a Plug & Play PV System Rating from the Certification Provider. The Plug & Play PV System Rating shall be determined based on the following characteristics of the System to be Certified's Code Compliance Plan:

- **Documenting System Information:** How is the sub-system documentation compiled and communicated for the as-built system?
- **Auditing Code Compliance:** How is the sub-system's compliance with the Code Compliance Plan determined?
- **Qualification Requirements:** What level of electrical training is required of, and what level of electrical hazard is presented to, the installer?

Informational Note: The Ratings framework is intended to provide a formalized, structured method to communicate the degree to which labor qualification and onsite inspection requirements of the PV System may be reduced.

Table 1: Rating framework for PV systems

"A Rating"	**System Information:** Automatically compiles and communicates all relevant information about the sub-system to a software commissioning application **Code Compliance:** Substantively guarantees compliance with applicable code without further review **Qualification Requirements:** Limited or no electrical training required. No exposure to hazardous voltages
"B Rating"	**System Information:** Compiles and communicates all relevant information about the sub-system through a bar code scanning tool that interfaces with a software commissioning application. **Code Compliance:** Full verification of compliance with applicable code requires remote visual documentation and may require onsite inspection **Qualification Requirements:** May require electrical training, no exposure to hazardous voltages
"C Rating"	**System Information**: Requires manual compilation of relevant information about the sub-system **Code Compliance:** Verification requires onsite inspection and/or visual documentation **Qualification Requirements:** Requires electrical training / Potential exposure to hazardous voltages

Informational Note: A Software Commissioning Application could be implemented on a controller embedded within a sub-system in the System to be Certified, or using an external platform such as a mobile app. In either case, the Software Commissioning Application is considered part of the System to be Certified.

Documentation Summary

Table 2-1: Summary of documents required to initiate certification of a Plug & Play PV System

Document	Description	Requirements Definition	Reference Library & Templates	Example Implementation
System Plan	Describes the overall design concept, configuration diagram, and specifications for the System to be Certified	Section 2.2	Appendix 1.2 Appendix 1.3 Appendix 1.4	Appendix 2.1-2.2
Code Compliance Plan	Describes how the System to be Certified meets the requirements for verifying code compliance of an as-built system. defined by the Master Inspection Checklist	Section 2.3	Appendix 1.5	Appendix 2.3
Electronic Self-Test Report Data Model	Structured data model that defines the information that an as-built system is required to compile and communicate to the Plug & Play Server to satisfy Code Compliance Plan requirements that are identified as being met by electronic self-test	Section 2.4	Appendix 1.6	Appendix 2.4
Visual Documentation Plan	List of photographs required to comply with the remote visual documentation requirements identified in the Code Compliance Plan	Section 2.3	Appendix 1.5	Appendix 2.5

3 Plug & Play ePI&I Communication Standard

3.1 Plug & Play PV ePI&I Communication Standard Requirements

3.1.1 A Plug & Play Software Application shall be considered compliant with the Plug & Play ePI&I Communication Standard if it satisfies the requirements of Sections 3.2-3.3.

Informational Note: The ePI&I Communication Standard consists of an Application Programmer's Interface (API), and a set of standardized Plug & Play PV data models. The API defines the protocol and conventions used for stakeholders to exchange data, while the Plug & Play Data Models define the recognized library of data models that constitute the payload of these data exchanges.

Informational Note: Refer to the Plug & Play PV White Paper, "Making Plug & Play PV Systems A Reality", for a description of how the ePI&I Communication Standard is used to define and execute a typical Plug & Play Process and Workflow.

3.2 Plug & Play PV Application Programmer's Interface (API)

Plug & Play-Compliant Software Applications shall follow the communication protocol defined in the Plug & Play PV API to transact ePI&I dataflows.

Informational Note: Refer to the Plug & Play PV API Technical Reference Manual, for complete API documentation. An interactive API user reference may be found online at: https://pnpserver.cse.fraunhofer.org:5000/spec.html

3.3 Plug & Play PV Data Models

3.3.1 Requirements

A Plug & Play-Compliant Software Application shall communicate using data models that satisfy the requirements of (1)-(3):

(1) Data shall utilize existing Plug & Play data models.

(2) Data shall be transacted using the communication protocols identified in the Plug & Play API.

(3) Data shall incorporate meta-data that follow the conventions identified in the Plug & Play API.

Informational Note: A reference list of Plug & Play PV Data Models are documented in Appendix 1.7-Misc. Data Model Library. Example implementations for a typical process flow may be found on the Plug & Play Server reference implementation at https://pnpserver.cse.fraunhofer.org:5000/. Please contact Fraunhofer CSE to obtain credentials.

3.3.2 Process for Adding to the Plug & Play Data Model Library

Additional data models may be incorporated into the Plug & Play Data Model library by registering with the Plug & Play server using the API. New data models shall follow conventions identified in the API.

ePI&I Communications Standard Documentation Summary

Document	Description	Requirements Definition	References
Plug & Play API Technical Reference	Defines the Plug & Play Application Programmer's Interface for electronic dataflows	3.2	https://pnpserver.cse.fraunhofer.org:5000/spec.html
Plug & Play Data Model Library	Defines the complete list of identified Plug & Play PV data models	3.3	Appendix 1.7

4 Plug & Play Solar Connection Device Standard

A Plug & Play Solar Connection Device (SCD) shall consist of a listed Plug & Play Connector Inlet and a readily accessible circuit breaker not to exceed 60A, and associated mating plug. The Plug & Play Connector Inlet consists of 4 power pins (L1,L2,N,G), rated to 60A; and 4 signal pins, reserved for manufacturer-specific implementations. The form factor and detailed specifications for a Plug & Play SCD will be defined under an appropriate umbrella of applicable component-level standards (e.g., NEMA, UL) once the device has achieved a product listing.

Appendix

A1.1 Sub System Definitions

Sub-System Name	Description
Microinverter/ACM System Information	system-level information about a MI/AC Module (ACM) PV System
String Inverter System Information	system-level information about a string-inverter PV System
PV Module Block	Represents a block of one or more PV modules series connected in a DC string. The PV Modules in a PV Module block may incorporate factory integrated electronics on module (such as optimizers, monitoring, or shutdown). All PV Modules in a PV Module block are identical.
AC Module Block	Represents a block of one or more listed AC modules parallel connected to form a branch. All AC Modules in a block are identical.
Microinverter Block	A block of one or more microinverters (not AC Modules) comprising a branch circuit
Converter Block	A block of one or more dc-dc power converters that are not integrated on a PV module. "DC-DC Power Converter" includes multiple types of devices that process power from a PV module or group of PV modules such as DC optimizers or module-level shutdown devices.
Class 2 Power Supply	An listed Class 2 power supply
Combiner	An AC or DC combiner. May include integrated overcurrent protection devices, rapid shutdown, and/or disconnects
Inverter	A central inverter, for use with a DC bus PV system.
Cabling Assembly	A conductor or cable assembly that is field-installed as a discrete component
Production Meter	A PV production meter that is field-installed as a discrete component
Disconnect	A disconnect that is field-installed as a discrete component
Solar Connection Device	A Plug & Play-compatible premises-side solar connection device inlet. May include integrated over current protection. May include Modbus communications interface
Service Panel	A service panel that acts as the connection point for a load-side premises connection.
Supply-Side Premises Interconnection	A premises interconnection on the supply side of the main service panel
Load-Side Premises Interconnection	A premises interconnection on the load side of the main service panel

A1.2 System Plan Summary Template

Manufacturer	*System Manufacturer*
Type of System	*High level description of system – e.g. AC Module, Microinverter, String Inverter*
Maximal configuration	*Maximum constraints on system size and configuration:*
	Max branch circuits / strings
	Max inverters per branch/ PV modules per string
	Max DC voltage
	Max AC Power Rating
	Nominal AC Voltage
Grounding	*For string inverter systems – grounded or ungrounded?*
Grounding System	*Describe how continuity of grounding conductors is insured*
Rapid Shutdown	*Description of rapid shutdown solution*
AFCI description	*Description of AFCI solution, if applicable*
GFCI description	*Description of GFCI solution, if applicable*
AC Disconnecting Means	*Description of AC Disconnect*
DC Disconnecting Means	*Description of DC Disconnect, if applicable*
Software Commissioning Application	*Description of Software Commissioning Application and Electrical Self-Test – how data is compiled, what executes the self-test, and how the HMI is implemented*
Sub-Systems:	*Description of Sub-Systems, including:*
Array Mounting	*Cross-reference ID against System Configuration*
Array	*Approved Mfr & part #s*
Cabling & Conduit	*Connector & termination method*
Inverter	*Protection requirements & method*
Combiner	*Grounding method*
Premises Connection	*Additional Features about the sub-system*

A1.3 System Configuration Diagram

System Configuration Diagram - Guidelines

The System Configuration Diagram is required to indicate:

(1) The (a) type, (b) maximum allowable number, and (c) connection topology of constituent subsystems that comprise a maximal valid system configuration.

Informational Note: A valid configuration of the System is generated by removing sub-systems from the maximal system configuration indicated in the System Configuration Diagram.

(2) The location of overcurrent protection and disconnects (even if integral to a constituent sub-system)

(3) Requirements for connection to the premises wiring

(4) A unique, monotonically increasing reference ID for each sub-system.

Informational Note: This reference ID is used to cross-reference to other portions of the required documentation package, such as the system specification.

(5) Whether the constituent sub-system is required or optional

A1.4 System Specification Data Model Library

Sub-System	Field Label	Description	Type	Units
Microinverter/ACM System information	Vendor	Vendor	txt	n/a
Microinverter/ACM System information	PnP ID	Unique P&P System Reference Identifier - a "model #" for a P&P system	txt	n/a
Microinverter/ACM System information	Version	System Certification Version	Integer	n/a
Microinverter/ACM System information	Type	System Type	Enumerated	1 = ACM 2 = String Inverter with Class 1 (standard) wiring 3 = Stringer Inverter with Class 2 Wiring 4 = Microinverter
Microinverter/ACM System information	max_ac_pwr_rating	Maximum allowable AC Power rating of the PV System	Real	W
Microinverter/ACM System information	max_branch_circuits	Maximum allowable number of branch circuits	Integer	Each
Microinverter/ACM System information	ac_pwr_rating	Actual AC Power rating of the PV System	Real	W
Microinverter/ACM System information	n_branch_circuits	Number of branch circuits in the PV System	Integer	Each
Microinverter/ACM System information	max_ambient_temp	Max expected ambient temperature	Real	deg C
Microinverter/ACM System information	max_rooftop_temp	Rooftop temperature adjustment factor	Real	deg C
Microinverter/ACM System information	n_fcn_blocks	# of subsystems within the PV System	Integer	Each
String Inverter System Information	Vendor	Vendor	txt	n/a
String Inverter System Information	PnP ID	Unique P&P System Reference Identifier - a "model #" for a P&P system	txt	n/a
String Inverter System Information	Version	System Certification Version	Integer	n/a
String Inverter System Information	Type	System Type	Enumerated	1 = ACM 2 = String Inverter with Class 1 (standard) wiring 3 = Stringer Inverter with Class 2 Wiring 4 = Microinverter
String Inverter System Information	max_ac_pwr_rating	Maximum allowable AC Power rating of the PV System	Real	W
String Inverter System Information	max_strings	Maximum allowable number of PV Strings in the PV System	Integer	Each
String Inverter System Information	ac_pwr_rating	Actual AC Power rating of the PV System	Real	W
String Inverter System Information	n_strings	Number of DC strings in the PV System	Integer	Each
String Inverter System Information	max_ambient_temp	Max expected ambient temperature	Real	deg C
String Inverter System Information	max_rooftop_temp	Rooftop temperature adjustment factor	Real	deg C
String Inverter System Information	n_fcn_blocks	# of subsystems within the PV System	Integer	Each
PV Module Block	ref_id	Standard Electrical Plan Functional Block reference	Integer	n/a
PV Module Block	mfr	PV Module Manufacturer	txt	n/a
PV Module Block	model	PV Module Model #	txt	n/a
PV Module Block	i_sc	PV Module Isc	Real	A
PV Module Block	v_oc	PV Module Voc	Real	V
PV Module Block	i_mp	PV Module Imp	Real	A
PV Module Block	v_mp	PV Module Vmp	Real	V
PV Module Block	p_max	PV Module Pmax	Real	W
PV Module Block	temp_coeff	PV Module Voc Temp. Coefficient	Real	mV/deg K
PV Module Block	max_fuse	PV Module Max Series Fuse	Real	A
PV Module Block	max_sys_v	PV Module Max System Voltage	Real	V
PV Module Block	max_modules_per_string	Max modules per string	Integer	16

Sub-System	Field Label	Description	Type	Units
PV Module Block	module_level_shutdown	PV Module Level Shutdown Present	Enumerated	1 (Yes)
PV Module Block	datasheet	Link to datasheet	txt	n/a
PV Module Block	n_modules	Number of PV Modules in this block	txt	
ACM Block	ref_id	Standard Electrical Plan Functional Block reference	Integer	n/a
ACM Block	mfr	AC Module Manufacturer	txt	n/a
ACM Block	model	AC Module Model #	txt	n/a
ACM Block	max_ACMs	Max ACMs per Branch Circuit	Integer	Each
ACM Block	ac_pwr_rating	AC Module AC Power Rating	Real	W
ACM Block	ac_i_rating	AC Module AC Output Current	Real	A
ACM Block	ac_v_rating	AC Module Nominal AC Voltage	Real	V
ACM Block	max_ocpd	AC Module Max OCPD Current Rating	Real	A
ACM Block	datasheet	Link to datasheet	txt	n/a
ACM Block	n_ACMs	Number of AC Modules in this block	Integer	Each
Microinverter Block	ref_id	Standard Electrical Plan Functional Block reference	Integer	n/a
Microinverter Block	mfr	Inverter Mfr	txt	n/a
Microinverter Block	model	Inverter Model #	txt	n/a
Microinverter Block	max_microinverters	Max number of microinverters per branch circuit	Integer	Each
Microinverter Block	dc_i_rating	Inverter DC Current Rating	Real	A
Microinverter Block	dc_v_rating	Inverter DC Voltage Rating	Real	V
Microinverter Block	ac_pwr_rating	Inverter AC Power Rating	Real	W
Microinverter Block	ac_i_rating	Inverter Max AC Current	Real	A
Microinverter Block	ac_v_rating	Inverter Nominal AC Voltage	Real	V
Microinverter Block	max_ocpd	Inverter Max OCPD Current Rating	Real	A
Microinverter Block	n_microinverters	Number of inverters in this block	Integer	Each
Microinverter Block	datasheet	Link to datasheet	txt	n/a
Inverter	ref_id	Standard Electrical Plan Functional Block reference	Integer	n/a
Inverter	type	Inverter type	Enumerated	1=AC Module/Microinverter; 2=Inverter;
Inverter	mfr	Inverter Mfr	txt	n/a
Inverter	model	Inverter Model #	txt	n/a
Inverter	dc_i_rating	Inverter DC Current Rating	Real	A
Inverter	dc_v_rating	Inverter DC Voltage Rating	Real	V
Inverter	ac_pwr_rating	Inverter AC Power Rating	Real	W
Inverter	ac_i_rating	Inverter AC Current Rating	Real	A
Inverter	ac_v_rating	Inverter AC Voltage Rating	Real	V
Inverter	max_ocpd	Inverter Max OCPD Current Rating	Real	A
Inverter	class2	Class 2 Input?	Enum	Y/N
Inverter	afci_integrated	AFCI integrated?	Enum	Y/N
Inverter	dc_disconnect_integrated	AC disconnect integrated?	Enum	Y/N
Inverter	ac_disconnect_integrated	DC disconnect integrated?	Enum	Y/N
Inverter	rapid_shutdown	Rapid Shutdown equipped?	Enum	Y/N
Inverter	grounding	Grounded / Ungrounded	Enum	Grounded / Ungrounded

Sub-System	Field Label	Description	Type	Units
Inverter	datasheet	Link to datasheet	txt	n/a
DC-DC Converter Block	ref_id	Standard Electrical Plan Functional Block reference	Integer	n/a
DC-DC Converter Block	type	Converter type	Enumerated	1=DC Optimizer 2=Smart Shutdown 3=Class 2 Supply
DC-DC Converter Block	mfr	Converter Mfr	txt	n/a
DC-DC Converter Block	model	Converter Model #	txt	n/a
DC-DC Converter Block	input_i_rating	Converter Input DC Current Rating	Real	A
DC-DC Converter Block	input_v_rating	Converter Input DC Voltage Rating	Real	V
DC-DC Converter Block	input_pwr_rating	Converter Input Power Rating	Real	W
DC-DC Converter Block	max_output_current	Converter Max Output Current	Real	A
DC-DC Converter Block	max_output_voltage	Converter Max Output Voltage Rating	Real	W
DC-DC Converter Block	output_pwr rating	Converter Output Power Rating	Real	A
DC-DC Converter Block	max_ocpd	Converter Max OCPD Current Rating	Real	A
DC-DC Converter Block	n_converters	Number of converters in this block	Integer	Each
DC-DC Converter Block	datasheet	Link to datasheet	txt	n/a
Class 2 Power Supply	ref_id	Standard Electrical Plan Functional Block reference	Integer	n/a
Class 2 Power Supply	mfr	Converter Mfr	txt	n/a
Class 2 Power Supply	model	Converter Model #	txt	n/a
Class 2 Power Supply	n_class2supplies	Number of Class 2 supplies in this block	Integer	Each
Class 2 Power Supply	input_i_rating	Class 2 Supply Input DC Current Rating	Real	A
Class 2 Power Supply	input_v_rating	Class 2 Supply Input DC Voltage Rating	Real	V
Class 2 Power Supply	max_output_current	Class 2 Supply Max Output Current	Real	A
Class 2 Power Supply	max_output_voltage	Class 2 Supply Max Output Voltage Rating	Real	V
Class 2 Power Supply	max_ocpd	Class 2 Supply Max OCPD Current Rating	Real	A
Class 2 Power Supply	datasheet	Link to datasheet	txt	n/a
Cable Assembly	ref_id	Standard Electrical Plan Functional Block reference	Integer	n/a
Cable Assembly	type	Cable/Wire Type	txt	(PV Wire, TC-ER, etc)
Cable Assembly	connector_flag	Connectorized (Y/N)	Enum	0=No; 1=Yes
Cable Assembly	mfr	Manufacturer	txt	n/a
Cable Assembly	part_no	Part #	txt	n/a
Cable Assembly	n_connections	Number of connection terminals	Integer	Each
Cable Assembly	v_rating	AC Voltage Rating	Real	V
Cable Assembly	n_conductors	Total # of Conductors	Integer	Each
Cable Assembly	n_current_carrying_pwr_c onductors	# of Current Carrying **Power** Conductors (as distinguished from signal cond	Integer	Each
Cable Assembly	pwr_conductor_awg	Power Conductor Size	txt	AWG
Cable Assembly	n_egc	# of Equipment Grounding Conductors	Integer	Each
Cable Assembly	egc_awg	EGC Size	Txt	AWG
Cable Assembly	n_sig_conductors	# of Control/Signal Conductors	Integer	Each
Cable Assembly	sig_conductor_awg	Control/Signal Conductor size	Txt	AWG
Cable Assembly	length	Cable Length	Real	ft

Sub-System	Field Label	Description	Type	Units
Cable Assembly	datasheet	Link to datasheet	txt	n/a
Combiner	ref_id	Standard Electrical Plan Functional Block reference	Integer	n/a
Combiner	mfr	Manufacturer	txt	n/a
Combiner	model	Model #	txt	n/a
Combiner	type	AC or DC combiner?	Enumerated	1=AC; 2=DC
Combiner	n_inputs	# of Input Circuits	Integer	Each
Combiner	i_rating_per_input	Input current rating per circuit	Real	A
Combiner	output_i_rating	Output current rating / Busbar rating	Real	A
Combiner	v_rating	Voltage rating	Real	V
Combiner	input_ocpd_type	Input Circuit OCPD Type	Enumerated	1 = Breaker; 2 = Fuse
Combiner	input_ocpd_rating	Input Circuit OCPD Rating	Real	A
Combiner	disconnecting_means	Disconnect type (None, Switch, Blade)	Enumerated	0 = No Disconnect; 1 = Circuit Breaker; 2 = Dedicated Disconnect
Combiner	max_mount_angle	Maximum Mounting Angle	Real	deg
Combiner	min_mount_angle	Minimum Mounting Angle	Real	deg
Combiner	datasheet	Link to datasheet	txt	n/a
Production Meter	ref_id	Standard Electrical Plan Functional Block reference	Integer	n/a
Production Meter	part_no	Part #	txt	n/a
Production Meter	datasheet	Link to datasheet	txt	n/a
Disconnect	ref_id	Standard Electrical Plan Functional Block reference	Integer	n/a
Disconnect	type	Disconnect Type	Enumerated	1 = AC 2 = DC
Disconnect	part_no	Part #	txt	n/a
Disconnect	i_rating	Current Rating	Real	A
Disconnect	v_rating	Voltage Rating	Real	V
Disconnect	n_poles	# of Poles	Integer	Each
Disconnect	datasheet	Link to datasheet	txt	n/a
Solar Connection Device Requirements	ref_id	Standard Electrical Plan Functional Block reference	Integer	n/a
Solar Connection Device Requirements	connector_flag	Connectorized (Y/N)	Enum	Y/N
Solar Connection Device Requirements	ocpd_min	Min OCPD size	Real	A
Solar Connection Device Requirements	ocpd_max	Max OCPD size	Real	A
Conduit Schedule	tag	lettered annotation	txt	n/a
Conduit Schedule	description	text description of which cables it handles (ref to a ref_id), and other relevant information about the conduit	txt	n/a
Conduit Schedule	type	PVC, EMT, etc	txt	n/a
Conduit Schedule	size	inner diameter	Real	in
Conduit Schedule	n_conduit_conductors	# of conductors running in the conduit	Integer	Each

© Fraunhofer USA 2016

A1.5 Master Inspection Checklist

Sub-System	Description	Reference(s)
String Inverter System	Total number of PV modules match the approved plans	P&P Standard
String Inverter System	Total number of power converters match the approved plans	P&P Standard
String Inverter System	Total system power rating matches the approved plans	P&P Standard
String Inverter System	Site layout drawings match the approved plans	P&P Standard
String Inverter System	# of DC Strings matches plans	P&P Standard
String Inverter System	# of AC branch circuits matches plans	P&P Standard
String Inverter System	# of paralleled AC sources per branch circuit matches plans	P&P Standard
String Inverter System	Total system power rating is less than applicable P&P limits	P&P Standard
String Inverter System	Systems with DC voltage > 80V, shall incorporate listed Arc Fault detection	690.11
String Inverter System	Systems with DC voltage > 80V shall incorporate an annunciator to identify if an arc fault has occurred	690.11
String Inverter System	With the exception of AC module systems, ungrounded conductors shall be protected by a listed ground fault detector	690.5, 690.6, 690.35
String Inverter System	GFCI, if required, properly isolates the faulted circuit	690.5, 690.6, 690.35
String Inverter System	System is equipped with an approved rapid shutdown device	690.12
String Inverter System	PV System has an approved AC disconnecting means located in a readily accessible location outside the building	690.15
String Inverter System	PV System includes a means to disconnect all ungrounded DC conductors from all other conductors in a readily accessible location, outside the building	690.15, 690.17, 690.54, 690.13
String Inverter System	Grounded two-wire DC systems have one conductor grounded or impedance grounded; Grounded bipolar systems have the reference (center tap) conductor grounded	690.41
String Inverter System	DC circuit grounding conductor connects at a single point to grounding electrode conductor through accepted means of bonding	690.42
String Inverter System	Equipment ground conductor connects at a single point to grounding electrode conductor through accepted means of bonding	690.43(B)
String Inverter System	Grounded conductor in grounded DC systems has continuous connection to grounding electrode conductor	690.49, 690.31(J)
String Inverter System	Equipment grounding conductor maintains continuity throughout PV system to grounding electrode conductor connection	690.48
String Inverter System	There is a disconnecting means to disconnect OCPD from all sources of supply. For source circuits, it shall be capable of being disconnected independently of other source circuits	690.16
ACM/MI System	Total number of PV modules match the approved plans	P&P Standard
ACM/MI System	Total number of power converters match the approved plans	P&P Standard

© Fraunhofer USA 2016

Sub-System	Description	Reference(s)
ACM/MI System	Total system power rating matches the approved plans	P&P Standard
ACM/MI System	Site layout drawings match the approved plans	P&P Standard
ACM/MI System	# of AC branch circuits matches plans	P&P Standard
ACM/MI System	# of series connected DC sources per circuit matches plans	P&P Standard
ACM/MI System	Total system power rating is less than applicable P&P limits	P&P Standard
ACM/MI System	Systems with DC voltage > 80V, shall incorporate listed Arc Fault detection	690.11
ACM/MI System	Systems with DC voltage > 80V shall incorporate an annunciator to identify if an arc fault has occurred	690.11
ACM/MI System	With the exception of AC module systems, ungrounded conductors shall be protected by a listed ground fault detector	690.5, 690.6, 690.35
ACM/MI System	GFCI, if required, properly isolates the faulted circuit	690.5, 690.6, 690.35
ACM/MI System	System is equipped with an approved rapid shutdown device	690.12
ACM/MI System	PV System has an approved AC disconnecting means located in a readily accessible location outside the building	690.15
ACM/MI System	Equipment ground conductor connects at a single point to grounding electrode conductor through accepted means of bonding	690.43(B)
ACM/MI System	Equipment grounding conductor maintains continuity throughout PV system to grounding electrode conductor connection	690.48
ACM/MI System	There is a disconnecting means to disconnect OCPD from all sources of supply. For source circuits, it shall be capable of being disconnected independently of other source circuits	690.16
PV Module Block	PV Modules are Listed to UL1703	690.4(B)
PV Module Block	PV Modules are labeled in accordance with NEC 690.51	690.51
PV Module Block	Module manufacturer and model # match the approved plans	P&P Standard
PV Module Block	Panel OCV is within specification (tbd - does this belong here?, >2V, < 1.25 x OCV)	P&P Standard
PV Module Block	Modules are mounted in compliance with manufacturer specifications	Oregon, Wisc, IREC, EERE
PV Module Block	Roof penetrations are secure and weather tight	EERE, Santa Clara, IREC
PV Module Block	PV Modules are protected by over current protection device per 690.9, located in an accessible location	690.9
PV Module Block	Electrical connections are properly terminated, have proper polarity, and are weather tight. Hard-wired connections maintain appropriate torque, clearance, creepage, etc.	110.3(B), 112
PV Module Block	Elecrical connections are fully and properly engaged	110.3(B), 110.12(A)
PV Module Block	Exposed metal is bonded to equipment ground conductor though approved means	690.43, 250.110, 690.50

Sub-System	Description	Reference(s)
PV Module Block	Connectors listed to UL6703. Connectors are guarded (690.33(C)), polarized (690.33(B)), Have FMLB Grounding member 690.33(D))	690.33
PV Module Block	If not rated for interrupting current, module connectors are labeled with ""Do Not Disconnect Under Load" or "Not for Current Interrupting."	690.33(E)
PV Module Block	# of series connected DC sources per circuit matches plans	P&P Standard
AC Module Block	AC Modules are Listed to UL1703	690.4(B)
AC Module Block	AC Module manufacturer and model # is in accordance with plans	690.4, 690.13
AC Module Block	AC Module is Listed to UL1741	690.4, 690.13
AC Module Block	AC Module is labeled in accordance with 690.13, 690.53, 690.56	690.13, 690.53, 690.56
AC Module Block	AC Module has an approved means to disconnect from ungrounded conductors of all sources, within or in sight of inverter.	690.13, 690.15
AC Module Block	AC output voltage matches the premises connection	P&P Standard
AC Module Block	AC Module output is protected by over current protection device per 690.9	690.9
AC Module Block	AC Module is labeled in accordance with NEC 690.51	690.51
AC Module Block	AC Modules are mounted in compliance with manufacturer specifications	Oregon, Wisc, IREC, EERE
AC Module Block	Roof penetrations are secure and weather tight	EERE, Santa Clara, IREC
AC Module Block	Electrical connections are properly terminated and weather tight	110.3(B), 112
AC Module Block	Electrical connections are properly terminated, have proper polarity, and are weather tight. Hard-wired connections maintain appropriate torque, clearance, creepage, etc.	110.3(B), 110.12(A)
AC Module Block	Exposed metal is bonded to equipment ground conductor though approved means	690.43, 250.110, 690.50
AC Module Block	Connectors listed to UL6703. Connectors are guarded (690.33(C)), polarized (690.33(B)), Have FMLB Grounding member 690.33(D))	690.33
AC Module Block	If not rated for interrupting current, module connectors are labeled with ""Do Not Disconnect Under Load" or "Not for Current Interrupting."	690.33(E)
AC Module Block	# of paralleled AC sources per branch circuit matches plans	P&P Standard
Inverter	Inverter manufacturer and model # is in accordance with plans	690.4, 690.13
Inverter	Inverter is Listed to UL1741	690.4, 690.13
Inverter	Inverter is labeled in accordance with 690.13, 690.53, 690.56	690.13, 690.53, 690.56
Inverter	Max current per input circuit is less than <1.25 max input rating	690.8
Inverter	Max combined current of paralleled sources is <1.25X max input rating of converter	690.8
Inverter	Input Voltage rating is sufficient for the maximum DC voltage per 690.7	690.7

Sub-System	Description	Reference(s)
Inverter	Inverters have an approved means to disconnect from ungrounded conductors of all sources, within or in sight of inverter.	690.13, 690.15
Inverter	AC output voltage matches the premises connection	P&P Standard
Inverter	Inverter output is protected by over current protection device per 690.9	690.9
Inverter	Inverter input circuit is protected by over current protection device per 690.9	690.9
Inverter	Connectors are listed for the application	690.33
Inverter	Electrical connections are properly terminated, have proper polarity, and are weather tight. Hard-wired connections maintain appropriate torque, clearance, creepage, etc.	110.3(B), 110.12(A)
Inverter	Elecrical connections are fully and properly engaged	110.3(B), 112
Inverter	Enclosures are firmly secured to the mounting surface, and mounted in compliance with manufacturer specifications	110.3(B), 110.13
Inverter	For any user-serviceable compartments: verify that the cover is closed and secured correctly	110.12(A)
Inverter	Exposed metal is bonded to equipment ground conductor though approved means	690.43, 250.110, 690.50
Microinverter	Microinverter manufacturer and model # is in accordance with plans	690.4, 690.13
Microinverter	Microinverter is Listed to UL1741	690.4, 690.13
Microinverter	Microinverter is labeled in accordance with 690.13, 690.53, 690.56	690.13, 690.53, 690.56
Microinverter	Max current per input circuit is less than <1.25 max input rating	690.8
Microinverter	Max combined current of paralleled sources is <1.25X max input rating of converter	690.8
Microinverter	Input Voltage rating is sufficient for the maximum DC voltage per 690.7	690.7
Microinverter	Microinverters have an approved means to disconnect from ungrounded conductors of all sources, within or in sight of Microinverter.	690.13, 690.15
Microinverter	AC output voltage matches the premises connection	P&P Standard
Microinverter	Microinverter output is protected by over current protection device per 690.9	690.9
Microinverter	Microinverter input circuit is protected by over current protection device per 690.9	690.9
Microinverter	Connectors are appropriately listed for the application	690.33
Microinverter	Electrical connections are properly terminated, have proper polarity, and are weather tight. Hard-wired connections maintain appropriate torque, clearance, creepage, etc.	110.3(B), 110.12(A)
Microinverter	Elecrical connections are fully and properly engaged	110.3(B), 112
Microinverter	Enclosure is firmly secured to the mounting surface, and mounted in compliance with manufacturer specifications	110.3(B), 110.13
Microinverter	For any user-serviceable compartments: verify that the cover is closed and secured correctly	110.12(A)

© Fraunhofer USA 2016

Sub-System	Description	Reference(s)
Microinverter	Exposed metal is bonded to equipment ground conductor though approved means	690.43, 250.110, 690.50
Microinverter	# of paralleled AC sources per branch circuit matches plans	P&P Standard
DC-DC Converter	Converter manufacturer and model # is in accordance with plans	690.4, 690.13
DC-DC Converter	Converter is Listed to UL1741	690.4, 690.13
DC-DC Converter	Converter is labeled in accordance with 690.13, 690.53, 690.56	690.13, 690.53, 690.56
DC-DC Converter	Max current per input circuit is less than <1.25 max input rating per string input	690.8
DC-DC Converter	Max combined current of paralleled sources is <1.25X max input rating of converter	690.8
DC-DC Converter	Input Voltage rating is sufficient for the maximum DC voltage per 690.7	690.7
DC-DC Converter	Converter output is protected by over current protection device per 690.9	690.9
DC-DC Converter	Connectors are appropriately listed for the application	690.33
DC-DC Converter	Electrical connections are properly terminated, have proper polarity, and are weather tight. Hard-wired connections maintain appropriate torque, clearance, creepage, etc.	110.3(B), 110.12(A)
DC-DC Converter	Elecrical connections are fully and properly engaged	110.3(B), 112
DC-DC Converter	Enclosure is firmly secured to the mounting surface, and mounted in compliance with manufacturer specifications	110.3(B), 110.13
DC-DC Converter	For any user-serviceable compartments: verify that the cover is closed and secured correctly	110.12(A)
DC-DC Converter	Exposed metal is bonded to equipment ground conductor though approved means	690.43, 250.110, 690.50
DC-DC Converter	# of series connected converter per string matches plans	P&P Standard
Class 2 Power Supply	Manufacturer and model # is in accordance with plans	690.4, 690.13
Class 2 Power Supply	Max current per input circuit is less than <1.25 max input rating per string input	690.8
Class 2 Power Supply	Input Voltage rating is sufficient for the maximum DC voltage per 690.7	690.7
Class 2 Power Supply	Output is protected by over current protection device per 690.9	690.9
Class 2 Power Supply	Connectors are appropriately listed for the application	690.33
Class 2 Power Supply	Electrical connections are properly terminated, have proper polarity, and are weather tight. Hard-wired connections maintain appropriate torque, clearance, creepage, etc.	110.3(B), 110.12(A)
Class 2 Power Supply	Elecrical connections are fully and properly engaged	110.3(B), 112
Class 2 Power Supply	Enclosure is firmly secured to the mounting surface, and mounted in compliance with manufacturer specifications	110.3(B), 110.13
Class 2 Power Supply	For any user-serviceable compartments: verify that the cover is closed and secured correctly	110.12(A)
Class 2 Power Supply	Exposed metal is bonded to equipment ground conductor though approved means	690.43, 250.110, 690.50
Cable Assembly	Conductor ampacity is sufficient for the max current of the connected source(s) per 690.8	690.8

© Fraunhofer USA 2016

Sub-System	Description	Reference(s)
Cable Assembly	Conductor voltage rating is sufficient for the connected source(s) per 690.7	690.7
Cable Assembly	Conductors are protected by over current protection device per 690.9	690.9
Cable Assembly	Cable assembly is an NEC-approved wiring method (e.g., 690.33, Chapter 3 / Article 300) for the application	690.33, 300, 110.8
Cable Assembly	Conductors are appropriately color coded, Conductors of various PV source & output circuits grouped, identified	690.31(B)
Cable Assembly	Conductors are listed and specified for the application	690.31
Cable Assembly	Conductors are undamaged	110.12(B)
Cable Assembly	Conductor bend radius is within specification, sufficient clearance around connectors	336.24, IREC
Cable Assembly	Wiring is installed in a neat & workmanlike manner; Conductor follows the surface of the building	110.12, IREC
Cable Assembly	Cable or Raceway is adequately supported at 6' intervals	334.3
Cable Assembly	Raceways terminated by adequate fittings or other means	300.12
Cable Assembly	Raceways are mechanically continiuous	300.12
Cable Assembly	Raceway is properly sized for conductors	300.17
Cable Assembly	PV Source & Output circuits in readily accessible location are suitably guarded 150+VDC in an accessible location	690.31(A), 690.7(D)
Cable Assembly	Cable protected from physical damage by approved means: protected from touching roof or other abrasive surfaces exposing them to physical damage.	334.12, IREC
Cable Assembly	PV Source & Output circuit conductors routed in a raceway that does not include conductors from other systems	690.31(B)
Cable Assembly	Equip ground conductor routed in the same raceway as other conductors	690.43, IREC
Cable Assembly	Equipment Ground is suitably sized and specified	690.45, 690.46, 250.120(c), EERE, 250.120, 250.122
Cable Assembly	Max DC bus voltage of series connected sources <600V	690.7C
Cable Assembly	Raceways, conduit, etc inside building shall be marked in accordance with 690.31(G)(3)	690.31(G)(3)
Cable Assembly	Connectors listed for the purpose.	690.33
Cable Assembly	Electrical connections are properly terminated, have proper polarity, and are weather tight. Hard-wired connections maintain appropriate torque, clearance, creepage, etc.	110.3(B), 110.12(A)
Cable Assembly	Elecrical connections are fully and properly engaged	110.3(B), 112
Disconnect	Interrupting current rating is sized for max circuit current rating per 690.8	690.15, 690.17
Disconnect	Voltage rating is sized for max voltage per 690.7	690.15, 690.17

Sub-System	Description	Reference(s)
Disconnect	Disconnect is identified and listed for the specified purpose	690.15, 690.17
Disconnect	Connectors are appropriately listed for the application	690.33
Disconnect	Electrical connections are properly terminated, have proper polarity, and are weather tight. Hard-wired connections maintain appropriate torque, clearance, creepage, etc.	110.3(B), 110.12(A)
Disconnect	Elecrical connections are fully and properly engaged	110.3(B), 112
Disconnect	Enclosure is firmly secured to the mounting surface, and mounted in compliance with manufacturer specifications	110.3(B), 110.13
Disconnect	For any user-serviceable compartments: verify that the cover is closed and secured correctly	110.12(A)
Disconnect	Exposed metal is bonded to equipment ground conductor though approved means	690.43, 250.110, 690.50
Disconnect	<6 disconnects in a single enclosure; Disconnects from more than one source shall be grouped and identified	690.31
Combiner	DC Combiners have a disconnect in the combiner, or within 1.8m of the combiner	690.15(C)
Combiner	Combiner model # is in accordance with plans	P&P Standard
Combiner	Combiner is listed to UL1741	690.4
Combiner	Voltage rating is sized for max voltage per 690.7	690.7
Combiner	Max current per input circuit is less than <1.25 max input rating per input	690.8
Combiner	Max combined current of paralleled sources is <1.25X max output rating of combiner	690.8
Combiner	Properly sized OCPD protects output	690.9
Combiner	Connectors are appropriately listed for the application	690.33
Combiner	Electrical connections are properly terminated, have proper polarity, and are weather tight. Hard-wired connections maintain appropriate torque, clearance, creepage, etc.	110.3(B), 110.12(A)
Combiner	Elecrical connections are fully and properly engaged	110.3(B), 112
Combiner	Enclosure is firmly secured to the mounting surface, and mounted in compliance with manufacturer specifications	110.3(B), 110.13
Combiner	For any user-serviceable compartments: verify that the cover is closed and secured correctly	110.12(A)
Combiner	Exposed metal is bonded to equipment ground conductor though approved means	690.43, 250.110, 690.50
Supply-Side Premises Interconnection	Premises voltage matches nominal voltage of PV system	P&P Standard
Supply-Side Premises Interconnection	Backfeed overcurrent protection sized appropriately for generation source	690.9
Supply-Side Premises Interconnection	Electrical connections are properly terminated, have proper polarity, and are weather tight. Hard-wired connections maintain appropriate torque, clearance, creepage, etc.	110.3(B), 110.12(A)

Sub-System	Description	Reference(s)
Load-Side Premises Interconnection	Sum of PV breaker and panel main breaker less than 120% of panel rating	NEC
Load-Side Premises Interconnection	Premises voltage matches nominal voltage of PV system	P&P Standard
Load-Side Premises Interconnection	Backfeed overcurrent protection sized appropriately for generation source	690.9
Load-Side Premises Interconnection	Electrical connections are properly terminated, have proper polarity, and are weather tight. Hard-wired connections maintain appropriate torque, clearance, creepage, etc.	110.3(B), 110.12(A)
Production Meter	Connectors are appropriately listed for the application	690.33
Production Meter	Electrical connections are properly terminated, have proper polarity, and are weather tight. Hard-wired connections maintain appropriate torque, clearance, creepage, etc.	110.3(B), 110.12(A)
Production Meter	Elecrical connections are fully and properly engaged	110.3(B), 112
Production Meter	Enclosure is firmly secured to the mounting surface, and mounted in compliance with manufacturer specifications	110.3(B), 110.13
Production Meter	Exposed metal is bonded to equipment ground conductor though approved means	690.43, 250.110, 690.50

© Fraunhofer USA 2016

A1.6 Self Test Data Model Library

Sub-System	Test Item	Units	key name	actual value (d)	Passing condition for Code Compliance Test			passing condition for permit compliance test		
					Lll	Spec	Ull	Lll	Spec	Ull
AC Module PV System Self Test Report	Total # of AC M's	Each	n_acm	Total # of ACM's detected in the system	n/a	n/a	n/a		# of ACM's specified on the permit	n/a
AC Module PV System Self Test Report	Total # of branch circuits	Each	n_branchcircuit	Total # of branch circuits detected in the system	3 (Set by P&P std)	n/a	5 (set by P&P std)	n/a	# of branch circuits specified on the permit	n/a
AC Module PV System Self Test Report	Total per rating	W	ac_rating	Detected AC power rating of the system	0	n/a	10000 (set by P&P std)	Permitted AC rating x 0.90	n/a	Permitted AC rating x 1.00
AC Module PV System Self Test Report	P&P Part Model #	n/a	pnp_model_no	Detected model number of the overall PV System	n/a	n/a	n/a	n/a	P&P System Model # specified on permit	n/a
AC Module PV System Self Test Report	Max Ambient temp	deg C	max_ambient_temp	Max ambient temp for this location.	n/a	n/a	n/a	Max ambient temp specified on the permit	n/a	n/a
AC Module PV System Self Test Report	Ambient temp on rooftop	deg C	rooftop_temp_adj	Rooftop temperature adjustment for this location.	n/a	n/a	n/a	Rooftop temp adjustment specified on permit	n/a	n/a
AC Module PV System Self Test Report	# of Functional Blocks	Each	n_fce_blocks	Total number of functional blocks detected	n/a	n/a	n/a	n/a	# of constituent subsystems specified by the permit	n/a
String Inverter PV System Self Test Report	Total # of PV Modules	Each	n_pvmodules	Total # of PV Modules detected in the system	n/a	n/a	n/a	n/a	# of PV Modules specified on permit	n/a
String Inverter PV System Self Test Report	Total # of PV strings	Each	n_strings	Total # of strings detected in the system	3 (Set by P&P std)	n/a	5 (set by P&P std)	n/a	# of strings specified on permit	n/a
String Inverter PV System Self Test Report	Total per rating	W	ac_rating	Detected AC power rating of the system	0	n/a	10000 (set by P&P std)	Permitted AC rating x 0.90	n/a	Permitted AC rating x 1.00
String Inverter PV System Self Test Report	P&P Part Model #	n/a	pnp_model_no	Detected model number of the overall PV System	n/a	n/a	n/a	n/a	P&P System Model # specified on permit	n/a
String Inverter PV System Self Test Report	Max Ambient temp	deg C	max_ambient_temp	Max ambient temp for this location.	n/a	n/a	n/a	Max ambient temp specified on the permit	n/a	n/a
String Inverter PV System Self Test Report	Ambient temp on rooftop	deg C	rooftop_temp_adj	Rooftop temperature adjustment for this location.	n/a	n/a	n/a	Rooftop temp adjustment specified on permit	n/a	n/a
String Inverter PV System Self Test Report	# of Functional Blocks	Each	n_fce_blocks	Total number of functional blocks detected	n/a	n/a	n/a	n/a	# of constituent subsystems specified by the permit	n/a
AC Module Block Self Test Report	Functional Block Reference #	n/a	fce_block_ref_no	Reference to the functional block in the reference Single Line Diagram represented by this component	n/a	n/a	n/a	n/a	n/a	n/a
AC Module Block Self Test Report	# of ACM's per branch	Each	n_acm_bc	# of ACM's in the branch circuit	0	n/a	max number of ACM's allowed, per mfr spec	n/a	Permitted # of ACM's in the branch circuit	n/a
AC Module Block Self Test Report	ACM Model #	n/a	model_no_acm	Model # of the ACM's in the branch circuit	n/a	n/a	n/a	n/a	Permitted ACM Model #	n/a
AC Module Block Self Test Report	ACM power rating	W	ac_rating_acm	Power rating of the ACM's	n/a	n/a	n/a	n/a	n/a	n/a
AC Module Block Self Test Report	ACM Voltage	V	v_acm	Voltage rating of the ACM	n/a	n/a	n/a	n/a	Permitted premise AC Voltage	n/a
AC Module Block Self Test Report	ACM Max Continuous Current	A	i_max_acm	Max Continuous Current of the ACM	n/a	n/a	n/a	n/a	n/a	n/a
AC Module Block Self Test Report	branch circuit current	A	i_branch_circuit	Max branch circuit current	n/a	n/a	n/a	n/a	n/a	n/a
AC Module Block Self Test Report	Overcurrent protection	A	ocpd_brc ith_circuit	Ampere rating of the circuit breaker or fuse protecting this branch circuit	If required OCPD size, 1.25 x Max branch circuit current _actual	n/a	n/a	n/a	n/a	n/a
AC Module Block Self Test Report	Terminations	Each	terminations_branch_circuit	Total number of mated connections detected in the branch circuit	n/a	Total number of mated connections expected in the branch circuit	n/a	n/a	n/a	n/a
Cable Assembly Self Test Report	Functional Block Reference #	n/a	fce_block_ref_no	Reference to the functional block in the reference Single Line Diagram represented by this component	n/a	n/a	n/a	n/a	n/a	n/a
Cable Assembly Self Test Report	Cable assembly voltage rating	V	v_cable	Voltage rating of the cable assembly	Max Allowable AC Voltage	n/a	Max voltage, based on permit	n/a	n/a	n/a
Cable Assembly Self Test Report	Cable assembly ampacity	A	ampacity_cable	Max ampacity rating, accounting for cable gauge + temp adjustment adj	1.25 x max current of the supply circuits	n/a	n/a	n/a	n/a	n/a
Cable Assembly Self Test Report	Max current from parallel sources	A	max_parallel_current	Maximum backfeed current on to the circuit of all parallel connected sources	n/a	n/a	n/a	n/a	n/a	n/a
Cable Assembly Self Test Report	Cable assembly OCPD	A	ocpd_cable	Ampere rating of the circuit breaker or fuse protecting this cable assembly	IF max current from other sources = 0, then Ll = 0 IF max current from other sources < ampacity_cable_actual, then Ll = 0 IF max current from other sources > ampacity_cable_actual, then Ll = Isc x 1.56	n/a	Actual ampacity of the cable	n/a	n/a	n/a
Cable Assembly Self Test Report	Cable assembly terminations	Each	terminations_cable	Total number of mated connections detected on the cable assembly	n/a	Expected number of mated connections	n/a	n/a	n/a	n/a
Cable Assembly Self Test Report	Cable assembly type	n/a	type_cable	Cable type (e.g., TC-ER, THHN, etc)	n/a	n/a	n/a	n/a	Cable type specified by the permit	n/a
Cable Assembly Self Test Report	Cable Assembly AWG	AWG	awg_cable	Cable AWG	n/a	n/a	n/a	n/a	AWG of conductors specified by the permit	n/a
Cable Assembly Self Test Report	Cable Assembly Max Current @ 90C	A	i_max_90c_cable	Current @ 90C, based on the AWG	n/a	n/a	n/a	n/a	n/a	n/a
Cable Assembly Self Test Report	Cable Assembly # of Conductors	Each	n_conductors_cable	# of conductors in the cable assembly	n/a	n/a	n/a	n/a	Permitted # of conductors in the cable assembly	n/a
Cable Assembly Self Test Report	Cable Assembly temp adjustment	n/a	temp_adj_cable	NEC temperature adjustment factor	n/a	n/a	n/a	n/a	n/a	n/a
Cable Assembly Self Test Report	Cable Assembly Fill Factor Adj	n/a	fill_adj_cable	NEC fill factor adjustment factor	n/a	n/a	n/a	n/a	n/a	n/a
Combiner Self Test Report	Functional Block Reference #	n/a	fce_block_ref_no	Reference to the functional block in the reference Single Line Diagram represented by this component						
Combiner Self Test Report	Combiner Model #	n/a	model_no_combiner	Model # of the Combiner	n/a	n/a	n/a	n/a	Permitted Combiner Model #	n/a
Combiner Self Test Report	Combiner Voltage rating	V	v_combiner	Voltage rating of the combiner	n/a	n/a	n/a	n/a	Permitted premise AC Voltage	n/a
Combiner Self Test Report	Combiner input current rating	A	i_input_combiner	Current rating of combiner input(s)	maximum of (1.25 x Max branch circuit current _actual)	n/a	n/a	n/a	n/a	n/a
Combiner Self Test Report	Combiner output current rating	A	i_output_combiner	Current rating of combiner output	sum of Isc currents (1.25 x Max branch circuit current _actual)	n/a	n/a	n/a	n/a	n/a
Combiner Self Test Report	Combiner terminations	Each	terminations_combiner	Total number of mated connections detected on the combiner	n/a	Expected number of mated connections	n/a	n/a	n/a	n/a
Combiner Self Test Report	Combiner Output OCPD	A	ocpd_combiner_output	Ampere rating of the circuit breaker or fuse protecting the combiner output	sum of Isc currents (1.25 x Max branch circuit current _actual)	n/a	n/a	n/a	n/a	n/a
Combiner Self Test Report	Measured voltage	V	v_meas_combiner	Actual voltage measured at the combiner	ANSI voltage lower limit - 211VAC	n/a	ANSI voltage upper limit - 269VAC	n/a	n/a	n/a
Solar Connection Device Self Test Report	Functional Block Reference #	n/a	fce_block_ref_no	Reference to the functional block in the reference Single Line Diagram represented by this component						
Solar Connection Device Self Test Report	SCD Type	n/a	type_scd	SCD Type	n/a	n/a	n/a	n/a	n/a	n/a
Solar Connection Device Self Test Report	SCD Model #	n/a	model_no_scd	SCD Model #	n/a	n/a	n/a	n/a	SCD model # specified by the permit	n/a
Solar Connection Device Self Test Report	SCD Voltage	V	v_scd	SCD nominal voltage rating	n/a	n/a	n/a	n/a	Permitted premise AC Voltage	n/a
PV Module Block Self Test Report	Functional Block Reference #	n/a	fce_block_ref_no	Reference to the functional block in the reference Single Line Diagram represented by this component	n/a	n/a	n/a	n/a	n/a	n/a
PV Module Block Self Test Report	# of PV Modules in this string	Each	n_pvmodules_blk	# of PV modules detected in this PV string	n/a	n/a	n/a	n/a	# of PV Modules in the string specified by the permit	n/a
PV Module Block Self Test Report	PV Module Model #	n/a	model_no_pvmodule	Model # of the PV Module	n/a	n/a	n/a	n/a	PV Module model # in the block specified by the permit	n/a
PV Module Block Self Test Report	Measured Panel OCV	V dc	v_oc_pvmodule	Measured voltage on the panel in open-circuit state	Datasheet OCV x 0.5	n/a	Datasheet OCV x 1.2	n/a	n/a	n/a
PV Module Block Self Test Report	Max Series Fuse	A	max_series_fuse_pvmodule	Max series fuse rating for the PV module, per the datasheet	n/a	n/a	n/a	n/a	n/a	n/a

© Fraunhofer USA 2016

Sub-System	Test Item	Units	key name	actual value (d)	Passing condition for Code Compliance Test			passing condition for permit compliance test		
					LB	Spec	UB	LB	Spec	UB
PV Module Block Self Test Report	Max current from parallel sources	A	max_parallel_current_pv_string	PV solmum backfeed current on to the PV string of all parallel connected sources	n/a	n/a	n/a	n/a	n/a	n/a
PV Module Block Self Test Report	PV Modules are protected by over current protection devices per 690.9	A	ocpd_pv_module	Size of OCPD protecting the PV Module Block	If max current from other sources = 0, then LB = 0 If max current from other sources = max series fuse, then LB = 0 If max current from other sources > max series fuse, then LB = isc x 1.56	n/a	max_series_fuse_pv_module	n/a	n/a	n/a
PV Module Block Self-Test Report	PV Module Power Rating	W	dc_pv_rating_pv_module	Power rating of the PV Module in this block	n/a	n/a	n/a	n/a	n/a	n/a
PV Module Block Self-Test Report	String Voltage	V dc	v_dc_pv_string	calculated theoretical max voltage of the string, accounting for module OCV x cold temperature effects	n/a	n/a	600V	n/a	n/a	n/a
PV Module Block Self-Test Report	Voltage temperature adjustment factor	n/a	temp_adj_pv_module	Voltage adjustment factor for pv module based on temperature	n/a	n/a	n/a	n/a	n/a	n/a
PV Module Block Self-Test Report	PV Module Open-Circuit Voltage, per specification	V dc	v_oc_pv_module	PV Module open circuit voltage, per specification/datasheet	n/a	n/a	n/a	n/a	n/a	n/a
PV Module Block Self-Test Report	PV Module Short-Circuit Current, per specification	A	i_sc_pv_module	PV Module short circuit current, per specification/datasheet	n/a	n/a	n/a	n/a	n/a	n/a
PV Module Block Self-Test Report	PV string voltage while system is in safe mode	V DC	v_safemode_pv_module	max voltage measured on the DC string prior to energizing dc bus	n/a	n/a	80V	n/a	n/a	n/a
PV Module Block Self-Test Report	Terminations	Each	terminations_pv_string	Total number of mated connections detected in the PV string	n/a	Total number of mated connections expected in the PV String	n/a	n/a	n/a	n/a
Class 2 Power Supply Test Report	Functional Block Reference #	n/a	fcn_block_ref_no	Reference to the functional block in the reference Single Line Diagram represented by this component	n/a	n/a	n/a	n/a	n/a	n/a
Class 2 Power Supply Test Report	Model #	n/a	model_no_class2supply	Model # of the Class 2 supply	n/a	n/a	n/a	n/a	Class2 Supply Model # specified by permit	n/a
Class 2 Power Supply Test Report	Voltage rating of the class 2 power supply	V dc	v_rg_class2supply	Input voltage rating of the Class 2 power supply	1.1 x Total number of mated connections detected on the cable assembly_actual	n/a	n/a	n/a	n/a	n/a
Class 2 Power Supply Test Report	Class 2 supply input current rating	A	i_input_class2supply	Input current rating of Class 2 supply	1.25 x Current @ 30C, based on the AWG_actual	n/a	n/a	n/a	n/a	n/a
Class 2 Power Supply Test Report	Class 2 supply output current rating	A	i_output_class2supply	Current rating of Class 2 supply output	n/a	n/a	n/a	n/a	n/a	n/a
Class 2 Power Supply Test Report	Class 2 supply terminations	Each	terminations_class2supply	Total number of mated connections detected on the Class 2 supply	n/a	Expected number of mated connections	n/a	n/a	n/a	n/a
Class 2 Power Supply Test Report	Class 2 Supply Output OCPD	A	ocpd_output_class2supply	Ampere rating of the circuit breaker or fuse protecting the Class 2 Supply output	If max current from other sources = 0, then LB = 0 If max current from other sources < i_output_class2supply, then LB = 0 If max current from other sources = i_output_class2supply, then LB = isc x 1.56	n/a	i_output_class2supply	n/a	n/a	n/a
DC Cable Assembly Self Test Report	Functional Block Reference #	n/a	fcn_block_ref_no	Reference to the functional block in the reference Single Line Diagram represented by this component	n/a	n/a	n/a	n/a	n/a	n/a
DC Cable Assembly Self Test Report	Cable assembly voltage rating	V	v_cable	Voltage rating of the cable assembly	600VDC	n/a	n/a	n/a	n/a	n/a
DC Cable Assembly Self Test Report	Cable assembly ampacity	A	ampacity_cable	Max ampacity rating, accounting for cable gauge x temp adj x fill factor adj	1.25 x max current of the supply circuit. E.g., for STR output = 1.25 x Current rating of combiner (input)i_actual	n/a	n/a	n/a	n/a	n/a
DC Cable Assembly Self Test Report	Max current from parallel sources	A	max_parallel_current_pv_string	PV solmum backfeed current on to the PV string of all parallel connected sources	n/a	n/a	n/a	n/a	n/a	n/a
DC Cable Assembly Self Test Report	Cable assembly OCPD	A	ocpd_cable	Ampere rating of the circuit breaker or fuse protecting the cable assembly	If max current from other sources = 0, then LB = 0 If max current from other sources < ampacity_cable_actual, then LB = 0 If max current from other sources = ampacity_cable_actual, then LB = isc x 1.56	n/a	ampacity_cable_actual	n/a	n/a	n/a
DC Cable Assembly Self Test Report	Cable assembly terminations	Each	terminations_cable	Total number of mated connections detected on the cable assembly	n/a	Expected number of mated connections	n/a	n/a	n/a	n/a
DC Cable Assembly Self Test Report	Cable assembly type	n/a	type_cable	Cable type (e.g., TC-ER, THHN, etc)	n/a	n/a	n/a	n/a	Cable type specified by the permit	n/a
DC Cable Assembly Self Test Report	Cable Assembly AWG	AWG	awg_cable	Cable AWG	n/a	n/a	n/a	n/a	AWG of conductors specified by the permit	n/a
DC Cable Assembly Self Test Report	Cable Assembly Max Current @ 30C	A	i_max_30c_cable	Current @ 30C, based on the AWG	n/a	n/a	n/a	n/a	n/a	n/a
DC Cable Assembly Self Test Report	Cable Assembly # of Conductors	Each	n_conductors_cable	# of conductors in the cable assembly	n/a	n/a	n/a	n/a	Permitted # of conductors in the cable assembly	n/a
DC Cable Assembly Self Test Report	Cable Assembly temp adjustment	n/a	temp_adj_cable	NEC temperature adjustment factor	n/a	n/a	n/a	n/a	n/a	n/a
DC Cable Assembly Self Test Report	Cable Assembly Fill Factor Adj	n/a	ff_adj_cable	NEC fill factor adjustment factor	n/a	n/a	n/a	n/a	n/a	n/a
String Inverter Self Test Report	Functional Block Reference #	n/a	fcn_block_ref_no	n/a	n/a	n/a	n/a	n/a	n/a	n/a
String Inverter Self Test Report	Inverter Model Number	n/a	model_no_inverter	Model # of the Inverter	n/a	n/a	n/a	n/a	Inverter model # specified by the permit	n/a
String Inverter Self Test Report	Output Power Rating	W AC	ac_rating_inverter	Inverter AC output power rating	n/a	n/a	n/a	n/a	AC rating of the inverter specified by the permit	n/a
String Inverter Self Test Report	Inverter Input Voltage	V dc	v_inverter_dc_input	Calculated max string voltage	Inverter min input operating voltage	n/a	Inverter input voltage rating - max	n/a	n/a	n/a
String Inverter Self Test Report	Inverter Output Voltage	V ac	v_inverter_ac_output	Nominal voltage rating of the inverter	n/a	n/a	n/a	n/a	Permitted premises AC Voltage	n/a
String Inverter Self Test Report	Inverter input current rating, per string	A	i_input_per_string_inverter	Max current rating of inverter string input	1.25 x max of all inputs Current rating of combiner (input)i_actual)	n/a	n/a	n/a	n/a	n/a
String Inverter Self Test Report	Inverter total input current rating	A	i_input_total_inverter	Current rating of combined inverter input	(1.25 x sum of all inputs (Current rating of combiner (input)i_actual)	n/a	n/a	n/a	n/a	n/a
String Inverter Self Test Report	Inverter max continuous output current rating	A	i_output_inverter	Current rating of inverter output	n/a	n/a	n/a	n/a	n/a	n/a
String Inverter Self Test Report	Inverter terminations	Each	terminations_inverter	Total number of mated connections detected on the inverter	n/a	Expected number of mated connections	n/a	n/a	n/a	n/a
String Inverter Self Test Report	Inverter Output OCPD	A	ocpd_inverter_output	Ampere rating of the circuit breaker or fuse protecting the inverter output	1.25 x max output (1.25 x i_output_inverter_actual)	n/a	Inverter max output fuse	n/a	n/a	n/a
String Inverter Self Test Report	Measured voltage	V	v_meas_inverter	Actual voltage measured at the inverter output	ANSI voltage lower limit = 211VAC	n/a	ANSI voltage upper limit = 264VAC	n/a	n/a	n/a
AC microinverter Block Self Test Report	Functional Block Reference #	n/a	fcn_block_ref_no	Reference to the functional block in the reference Single Line Diagram represented by this component	n/a	n/a	n/a	n/a	n/a	n/a
AC microinverter Block Self Test Report	# of M's per branch	Each	n_mi_bc	# of M's in the branch circuit	0	n/a	max number of M's allowed, per mfr spec	n/a	Permitted # of M's in the branch circuit	n/a
AC microinverter Block Self Test Report	M1 Model #	n/a	model_no_mi	Model # of the M's in the branch circuit	n/a	n/a	n/a	n/a	Permitted M1 Model #	n/a
AC microinverter Block Self Test Report	M1 power rating	W	dc_rating_mi	Power rating of the M's	n/a	n/a	n/a	n/a	n/a	n/a
AC microinverter Block Self Test Report	M1 Nominal AC Voltage	V	ac_v_mi	Nominal AC Voltage of the M1	n/a	n/a	n/a	n/a	Permitted premises AC Voltage	n/a

Fraunhofer USA

Sub-System	Test Item	Units	key name	actual value (d)	Passing condition for Code Compliance Test			passing condition for permit compliance test		
					LB	Spec	UB	LB	Spec	UB
Microinverter Block Self Test Report	MI Input Current	A	dc_i_mi	Current rating of MI DC input	1.25 x MI value of connected source circuit	n/a	n/a	n/a	n/a	n/a
Microinverter Block Self Test Report	MI Input Voltage	V	dc_v_mi	Voltage rating of MI DC input	Max OCV of connected source circuit	n/a	n/a	n/a	n/a	n/a
Microinverter Block Self Test Report	MI Max Continuous Current	A	i_ac_max_mi	Max Continuous Current of the MI	n/a	n/a	n/a	n/a	n/a	n/a
Microinverter Block Self Test Report	branch circuit current	A	i_branch_circuit	Max branch circuit current	n/a	n/a	n/a	n/a	n/a	n/a
Microinverter Block Self Test Report	Overcurrent protection	A	ocpd_branch_circuit	Ampere rating of the circuit breaker or fuse protecting this branch circuit	Required OCPD size, 1.25 x Max branch circuit current (actual)	n/a	n/a	n/a	n/a	n/a
Microinverter Block Self Test Report	Terminations	Each	terminations_branch_circuit	Total number of mated connections detected in the branch circuit	n/a	Total number of mated connections expected in the branch circuit	n/a	n/a	n/a	n/a
DC-DC Converter Test Report	Functional Block Reference #	n/a	fbr_block_ref_no	Reference to the functional block in the reference Single Line Diagram represented by this component	n/a	n/a	n/a	n/a	n/a	n/a
DC-DC Converter Test Report	Model #	n/a	model_no_converter	Model # of the Converter	n/a	n/a	n/a	n/a	Converter Model # specified by permit	n/a
DC-DC Converter Test Report	# of Converters	Each	n_converters	# of converters in the branch circuit	n/a	n/a	n/a	n/a	Permitted # of converters in the branch circuit	n/a
DC-DC Converter Test Report	Converter Input Current	A	input_i_converter	Current rating of Converter DC input	1.25 x MI value of connected source circuit	n/a	n/a	n/a	n/a	n/a
DC-DC Converter Test Report	Converter Input Voltage	V	input_v_converter	Voltage rating of Converter DC input	Max OCV of connected source circuit	n/a	n/a	n/a	n/a	n/a
DC-DC Converter Test Report	Converter max output current	A	i_output_converter	Calculated max current from the converter	n/a	n/a	n/a	n/a	n/a	n/a
DC-DC Converter Test Report	Converter terminations	Each	terminations_converter	Total number of mated connections detected on the Converter	n/a	Expected number of mated connections	n/a	n/a	n/a	n/a
DC-DC Converter Test Report	Converter Max Voltage	V dc	v_dc_converter	Calculated theoretical max voltage of the converter block, accounting for module OCV & temperature effects	n/a	n/a	600V	n/a	n/a	n/a
DC-DC Converter Test Report	Circ 2 Supply Output OCPD	A	ocpd_output_circ2supply	Ampere rating of the circuit breaker or fuse protecting the converter output	IF max current from other sources = 0, then LB = 0 IF max current from other sources < i_output_converter, then LB = 0 IF max current from other sources > i_output_converter, then LB = i_output_converter x 1.56	n/a	i_output_converter	n/a	n/a	n/a
Disconnect Test Report	Functional Block Reference #	n/a	fbr_block_ref_no	Reference to the functional block in the reference Single Line Diagram represented by this component	n/a	n/a	n/a	n/a	n/a	n/a
Disconnect Test Report	Model #	n/a	model_no_disconnect	Model # of the Disconnect	n/a	n/a	n/a	n/a	Disconnect Model # specified by permit	n/a
Disconnect Test Report	Listing	n/a	disconnect_type	Type of Disconnect		Req'd disc type				
Disconnect Test Report	Disconnect Voltage Rating	A	i_rtg_disconnect	Current rating of Disconnect	Max current of source circuit	n/a	n/a	n/a	n/a	n/a
Disconnect Test Report	Disconnect Current Rating	V	v_rtg_disconnect	Voltage rating of Disconnect	Max voltage of connected source circuit	n/a	n/a	n/a	n/a	n/a
Main Service Panel Self Test Report	Functional Block Reference #	n/a	fbr_block_ref_no	Reference to the functional block in the reference Single Line Diagram represented by this component	n/a	n/a	n/a	n/a	n/a	n/a
Main Service Panel Self Test Report	PV System OCPD	A	msp_pv_ocpd	Ampere rating of PV system OCPD			n/a			
Main Service Panel Self Test Report	Main OCPD	A	msp_main_ocpd	Ampere rating of Main OCPD			n/a			
Main Service Panel Self Test Report	Max Combined OCPD	A	msp_combined_ocpd	(PV System OCPD + Main OCPD)	n/a	n/a	Busbar rating x 1.2	n/a	n/a	n/a

Fraunhofer USA

A1.7 Miscellaneous Data Models

Listed below are example data models for the Plug and Play ePI&I communication. Additional data model definitions, for any MIME file type, or written using JSON Schema Version 4, may be submitted by any stakeholder using the Plug and Play API. Some datasets collected by the server are in PDF format. The others are in JSON format, as defined for each by a JSON schema as shown below.

Example PDF dataset labels:

- Schedule Z (MA) : Schedule Z (MA) Net Metering Form
- Site Plan
- Contract: Contract between installer and property owner

Example JSON datasets:

Premises Electric Details

Information on the electrical connections on a set of premises

Attributes

Name	Type	Description	Example
Connection Location	*string*	Is the connection on the Supply Side or Load Side of the Main Service panel? **one of:**`"Supply Side"` or `"Load Side"`	`"Supply Side"`
Connection Type	*string*	Wiring type for the premises. **one of:**`"Hard Wired"` or `"Solar Connection Device"`	`"Hard Wired"`
Service Panel:Service Panel OCPD rating	*number*	Amps (Only needed if connection is on the load side)	`42.0`
Service Panel:Service Panel current rating	*number*	Amps (Only needed if connection is on the load side)	`42.0`
Service Panel:Service Panel rating	*number*	Current rating for the main panel (amps)	`42.0`
Service Panel:circuits/current	*number*	current in amperes	`42.0`
Service Panel:circuits/voltage	*number*	AC Voltage	`42.0`
Solar Connection Device:SCD Type	*string*	**one of:**`"Meter Collar"` or `"Meter Socket"` or `"Enclosure / Subpanel"` or `"Main Panel"`	`"Meter Collar"`
Solar Connection Device:ac_current_rating	*number*	Input Current Rating	`42.0`
Solar Connection Device:ac_voltage_rating	*number*	Input Voltage Rating	`42.0`
Solar Connection Device:disconnect_included	*boolean*	Integrated Disconnect?	`true`
Solar Connection Device:install_date	*string*	Installation Date	`"example"`
Solar Connection Device:mfr	*string*	Manufacturer	`"example"`

Solar Connection Device:model	*string*	Model	`"example"`
Solar Connection Device:ocpd_type	*string*	OCPD Type (1 = Breaker; 2 = Fuse) **one of:**`"Breaker"` or `"Fuse"`	`"Breaker"`
Solar Connection Device:pv_ocpd	*string*	PV System OCPD Current Rating	`"example"`
ac_voltage	*number*		`42.0`
ac_voltage_description	*string*		`"1Ph 2Wi 120V L-N – 1-Phase, 2-Wire 120 V Line to Neutral."`
notes	*string*	Any other notes	`"example"`

A2.1 System Plan - Summary

Manufacturer	PV Systems, Inc
Type of System	AC Module
Maximal configuration	Maximum constraints on system size and configuration: Max 2 branch circuits 12 AC Modules per branch 7.848 kW max AC Power rating 240V AC nominal voltage
Grounding System	Rack bonded to ACM frame w/UL2703 hardware. Grounding conductors path is continuous from frame to a 4-wire premises-side Solar Connection Device
Rapid Shutdown	AC Modules provide rapid shutdown, actuated from an AC Combiner outside premises
AFCI description	N/A
GFCI description	N/A
AC Disconnecting Means	Integral disconnect in SCD
DC Disconnecting Means	N/A
Software Commissioning Application	Embedded platform housed in an AC Combiner executes self-test: (1) maps array, (2) detects end-caps, and (3) detects connection to SCD. Mobile app provides an HMI to interface with the embedded platform.

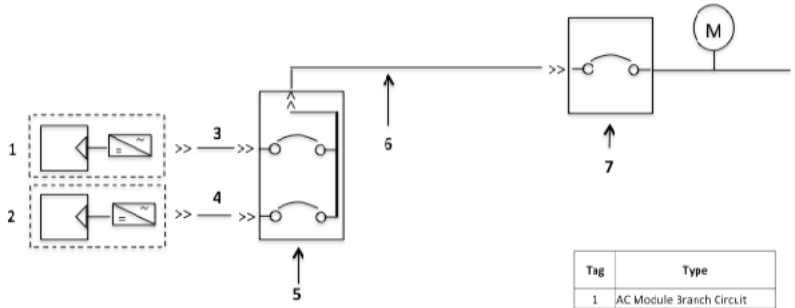

Tag	Type
1	AC Module Branch Circuit
2	AC Module Branch Circuit
3	Cable Assembly
4	Cable Assembly
5	AC Combiner
5	Cable Assembly
7	Solar Connection Device (SCD)

Sub-Systems

Sub-System	Description	Sys Config Diagram Reference	Connectorized? (Y/N)
Array Mounting	Racking system to be identified by installer, UL2703 bonding screws secure rack to frame	N/A	N/A
PV Array - Branch Circuit #1-2	Part #SPR-E20-327-AC Branch circuit terminated with smart end cap Protected by 20A OCPD in AC Combiner	1-2	Y
PV Array to AC Combiner Wiring	Each branch uses a pre-fabricated 10AWG TC-ER 3 conductor cable (L1,L2,PE), length specified by installer. Excess cable secured under rooftop array Conduit schedule defined by installer Conductors protected by 20A OCPD in AC Combiner	3-4	Y
AC Combiner	Part # PL-ACC-XYZ Houses embedded controller Input: 20A smart breaker per branch circuit input, pin & sleeve connector xyz Output: Rated to 50A, standard SCD receptacle. Protected by OCPD in SCD.	5	Y
AC combiner to Premises Connection wiring	Pre-fabricated 2 meter, 4 conductor 6AWG USE wire connects SCD to AC Combiner Housed in flex conduit Conductors protected by OCPD in SCD	6	Y
Premises Connection	Premises connection through Solar Connection Device on load side or supply side SCD incorporates AC disconnect SCD requires 40A breaker	7	Y

© Fraunhofer USA 2016

A2.2 System Specification

Sub-System	Field Label	Description	Type	value
Microinverter/ACM System information	Vendor	Vendor	txt	SunPower
Microinverter/ACM System information	PnP ID	Unique P&P System Reference Identifier - a "model #" for a P&P system	txt	SPWR-EQX-123
Microinverter/ACM System information	Version	System Certification Version	Integer	1
Microinverter/ACM System information	Type	System Type	Enumerated	1 (AC Module)
Microinverter/ACM System information	max_ac_pwr_rating	Maximum allowable AC Power rating of the PV System	Real	7848
Microinverter/ACM System information	max_branch_circuits	Maximum allowable number of branch circuits	Integer	2
Microinverter/ACM System information	n_branch_circuits	Number of branch circuits in the PV System	Integer	<configurable>
Microinverter/ACM System information	ac_pwr_rating	Actual AC Power rating of the PV System	Real	<configurable>
Microinverter/ACM System information	max_ambient_temp	Max expected ambient temperature	Real	<configurable>
Microinverter/ACM System information	max_rooftop_temp	Rooftop temperature adjustment factor	Real	<configurable>
Microinverter/ACM System information	n_fcn_blocks	# of subsystems within the PV System	Integer	7
ACM Block	ref_id	Standard Electrical Plan Functional Block reference		1
ACM Block	mfr	AC Module Manufacturer		SunPower
ACM Block	model	AC Module Model #		SPR-E20-327-AC
ACM Block	max_ACMs	Max ACMs per Branch Circuit		12
ACM Block	n_ACMs	Number of AC Modules in this block		<configurable>
ACM Block	ac_pwr_rating	AC Module AC Power Rating		320
ACM Block	ac_i_rating	AC Module AC Output Current		1.33
ACM Block	ac_v_rating	AC Module Nominal AC Voltage		240
ACM Block	max_ocpd	AC Module Max OCPD Current Rating		20
ACM Block	datasheet	Link to datasheet		http://us.sunpower.com/sites/sunpower/files/media-library/data-sheets/ds-e20-series-327-320-residential-ac-modules.pdf
ACM Block	ref_id	Standard Electrical Plan Functional Block reference		2
ACM Block	mfr	AC Module Manufacturer		SunPower
ACM Block	model	AC Module Model #		SPR-E20-327-AC
ACM Block	max_ACMs	Max ACMs per Branch Circuit		12
ACM Block	n_ACMs	Number of AC Modules in this block		<configurable>
ACM Block	ac_pwr_rating	AC Module AC Power Rating		320
ACM Block	ac_i_rating	AC Module AC Output Current		1.33
ACM Block	ac_v_rating	AC Module Nominal AC Voltage		240
ACM Block	max_ocpd	AC Module Max OCPD Current Rating		20
ACM Block	datasheet	Link to datasheet		http://us.sunpower.com/sites/sunpower/files/media-library/data-sheets/ds-e20-series-327-320-residential-ac-modules.pdf
Cable Assembly	ref_id	Standard Electrical Plan Functional Block reference		3
Cable Assembly	type	Cable/Wire Type	txt	SOOW
Cable Assembly	connector_flag	Connectorized (Y/N)	Enum	1 (Connectorized)
Cable Assembly	mfr	Manufacturer	txt	Cerrowire
Cable Assembly	part_no	Part #	txt	283-3603A
Cable Assembly	n_connections	Number of connection terminals		2
Cable Assembly	v_rating	AC Voltage Rating	Real	600
Cable Assembly	n_conductors	Total # of Conductors	Integer	3

Sub-System	Field Label	Description	Type	value
Cable Assembly	n_current_carrying_pwr_conductors	# of Current Carrying **Power** Conductors (as distinguished from signal conductors)	Integer	2
Cable Assembly	pwr_conductor_awg	Power Conductor Size	Integer	12
Cable Assembly	n_egc	# of Equipment Grounding Conductors	Integer	1
Cable Assembly	egc_awg	EGC Size	Txt	12
Cable Assembly	n_sig_conductors	# of Control/Signal Conductors	Integer	0
Cable Assembly	sig_conductor_awg	Control/Signal Conductor size	Txt	n/a
Cable Assembly	length	Cable Length	Real	<configurable>
Cable Assembly	conduit_tag	cross reference to conduit schedule	txt	<configurable>
Cable Assembly	datasheet	Link to datasheet	txt	http://www.homedepot.com/p/Cerrowire-25-ft-12-3-600-Volt-Black-SOOW-Cord-283-3603A/202564775
Cable Assembly	ref_id	Standard Electrical Plan Functional Block reference		4
Cable Assembly	type	Cable/Wire Type	txt	SOOW
Cable Assembly	connector_flag	Connectorized (Y/N)	Enum	1 (Connectorized)
Cable Assembly	mfr	Manufacturer	txt	Cerrowire
Cable Assembly	part_no	Part #	txt	283-3603A
Cable Assembly	n_connections	Number of connection terminals		2
Cable Assembly	v_rating	AC Voltage Rating	Real	600
Cable Assembly	n_conductors	Total # of Conductors	Integer	3
Cable Assembly	n_current_carrying_pwr_conductors	# of Current Carrying **Power** Conductors (as distinguished from signal conductors)	Integer	2
Cable Assembly	pwr_conductor_awg	Power Conductor Size	Integer	12
Cable Assembly	n_egc	# of Equipment Grounding Conductors	Integer	1
Cable Assembly	egc_awg	EGC Size	Txt	12
Cable Assembly	n_sig_conductors	# of Control/Signal Conductors	Integer	0
Cable Assembly	sig_conductor_awg	Control/Signal Conductor size	Txt	n/a
Cable Assembly	length	Cable Length	Real	<configurable>
Cable Assembly	conduit_tag	cross reference to conduit schedule	txt	<configurable>
Cable Assembly	datasheet	Link to datasheet	txt	http://www.homedepot.com/p/Cerrowire-25-ft-12-3-600-Volt-Black-SOOW-Cord-283-3603A/202564775
Combiner	ref_id	Standard Electrical Plan Functional Block reference	Integer	5
Combiner	mfr	Manufacturer	txt	SunPower
Combiner	model	Model #	txt	PnP-PVSS-001
Combiner	type	AC or DC combiner?	Enumerated	1 (AC Combiner)
Combiner	n_inputs	# of Input Circuits	Integer	2
Combiner	i_rating_per_input	Input current rating per circuit	Real	20
Combiner	output_i_rating	Output current rating / Busbar rating	Real	60
Combiner	v_rating	Voltage rating	Real	1000
Combiner	input_ocpd_type	Input Circuit OCPD Type	Enumerated	Breaker
Combiner	input_ocpd_rating	Input Circuit OCPD Rating	Real	20
Combiner	disconnecting_means	Disconnect type (None, Switch, Blade)	Enumerated	0 (none)
Combiner	max_mount_angle	Maximum Mounting Angle		0
Combiner	min_mount_angle	Minimum Mounting Angle		180

Sub-System	Field Label	Description	Type	value
Combiner	nrtl_ref	NRTL File #	txt	n/a
Combiner	datasheet	Link to datasheet	txt	n/a
Cable Assembly	ref_id	Standard Electrical Plan Functional Block reference		6
Cable Assembly	type	Cable/Wire Type	txt	THHN
Cable Assembly	connector_flag	Connectorized (Y/N)	Enum	1 (Connectorized)
Cable Assembly	mfr	Manufacturer	txt	Phoenix
Cable Assembly	part_no	Part #	txt	PnP-123
Cable Assembly	n_connections	Number of connection terminals		2
Cable Assembly	v_rating	AC Voltage Rating	Real	600V
Cable Assembly	n_conductors	Total # of Conductors	Integer	7
Cable Assembly	n_current_carrying_pwr_conductors	# of Current Carrying **Power** Conductors (as distinguished from signal conductors)	Integer	3
Cable Assembly	pwr_conductor_awg	Power Conductor Size	Integer	6
Cable Assembly	n_egc	# of Equipment Grounding Conductors	Integer	1
Cable Assembly	egc_awg	EGC Size	Txt	6
Cable Assembly	n_sig_conductors	# of Control/Signal Conductors	Integer	4
Cable Assembly	sig_conductor_awg	Control/Signal Conductor size	Txt	18
Cable Assembly	length	Cable Length	Real	<configurable>
Cable Assembly	conduit_tag	cross reference to conduit schedule	txt	<configurable>
Cable Assembly	datasheet	Link to datasheet	txt	n/a
Solar Connection Device	ref_id	Standard Electrical Plan Functional Block reference		7
Solar Connection Device	connector_flag	Connectorized (Y/N)	Enum	1 (Connectorized)
Solar Connection Device	ocpd_min	Min OCPD size		40
Solar Connection Device	ocpd_max	Max OCPD size		60
Conduit Schedule	tag	lettered annotation	txt	A
Conduit Schedule	description	text description of which cables it handles (ref to a ref_id), and other relevant information about the conduit	txt	<configurable>
Conduit Schedule	type	PVC, EMT, etc	txt	<configurable>
Conduit Schedule	size	inner diameter	Real	<configurable>
Conduit Schedule	n_conduit_conductors	# of conductors running in the conduit	Integer	<configurable>
Conduit Schedule	tag	lettered annotation	txt	B
Conduit Schedule	description	text description of which cables it handles (ref to a ref_id), and other relevant information about the conduit	txt	<configurable>
Conduit Schedule	type	PVC, EMT, etc	txt	<configurable>
Conduit Schedule	size	inner diameter	Real	<configurable>
Conduit Schedule	n_conduit_conductors	# of conductors running in the conduit	Integer	<configurable>

© Fraunhofer USA 2016

A2.3 Code Compliance Plan

Sub-System	Description	Reference(s)	Verification Method	Expanded Description of Verification Method	Self test reference	Vis doc reference
ACM/MI System	Total number of PV modules match the approved plans	P&P Standard	Design	AC Modules, pv module count is implied through interrogation of electronics	n/a	n/a
ACM/MI System	Total number of power converters match the approved plans	P&P Standard	Self-Test	Interrogation of AC Modules	1	n/a
ACM/MI System	Total system power rating matches the approved plans	P&P Standard	Self-Test	Calculated: based on AC Modules count x power output referenced from AC Module part #	3	n/a
ACM/MI System	Site layout drawings match the approved plans	P&P Standard	Visual	Digital photograph of PV Array	n/a	1
ACM/MI System	# of AC branch circuits matches plans	P&P Standard	Self-Test	Implied by detected presence of AC Modules on each branch circuit	2	n/a
ACM/MI System	# of series connected DC sources per circuit matches plans	P&P Standard	Design	Not required - System uses listed AC Modules	n/a	n/a
ACM/MI System	Total system power rating is less than applicable P&P limits	P&P Standard	Self-Test	Calculated: based on AC Modules count x power output referenced from AC Module part #	3	n/a
ACM/MI System	Systems with DC voltage > 80V, shall incorporate listed Arc Fault detection	690.11	Design	Not required - System uses listed AC Modules	n/a	n/a
ACM/MI System	Systems with DC voltage > 80V shall incorporate an annunciator to identify if an arc fault has occurred	690.11	Design	Not required - System uses listed AC Modules	n/a	n/a
ACM/MI System	With the exception of AC module systems, ungrounded conductors shall be protected by a listed ground fault detector	690.5, 690.6, 690.35	Design	Not required - System uses listed AC Modules	n/a	n/a
ACM/MI System	GFCI, if required, properly isolates the faulted circuit	690.5, 690.6, 690.35	Design	Not required - System uses listed AC Modules	n/a	n/a
ACM/MI System	System is equipped with an approved rapid shutdown device	690.12	Design	Combiner incorporates rapid shutdown	n/a	n/a
ACM/MI System	PV System has an approved AC disconnecting means located in a readily accessible location outside the building	690.15	Visual	Digital photograph of SCD. Connects to premises through SCD with an integrated breaker located in a readily accessible location.	n/a	2
ACM/MI System	Equipment ground conductor connects at a single point to grounding electrode conductor through accepted means of bonding	690.43(B)	Design	Grounding to premises GEC through SCD install	n/a	n/a
ACM/MI System	Equipment grounding conductor maintains continuity throughout PV system to grounding electrode conductor connection	690.48	Self-Test	Continuous cable assembly w/integrated EGC from rooftop array through SCD. Continuity implied by detection of AC Modules on branch circuits, and by detection of line voltage from SCD	1	n/a
ACM/MI System	Disconnecting means to disconnect fuse from all sources of supply if energized from both directions. For source circuits, it shall be capable of being disconnected independently of other source circuits	690.16	Design	Not applicable, no fuses	n/a	n/a
AC Module Block	Ref ID 1				n/a	n/a
AC Module Block	AC Modules are Listed to UL1703	690.4(B)	Design	Implied by interrogation of AC Modules cross-referencing to a valid model #	n/a	n/a
AC Module Block	AC Module manufacturer and model # is in accordance with plans	690.4, 690.13	Self-Test	Interrogation of AC modules to ascertain that model # is valid	12	n/a
AC Module Block	AC Module is Listed to UL1741	690.4, 690.13	Design	Implied by interrogation of AC Modules cross-referencing to a valid model #	n/a	n/a
AC Module Block	AC Module is labeled in accordance with 690.13, 690.53, 690.56	690.13, 690.53, 690.56	Design	Implied by interrogation of AC Modules cross-referencing to a valid model #	n/a	n/a
AC Module Block	AC Module has an approved means to disconnect from ungrounded conductors of all sources, within or in sight of inverter.	690.13, 690.15	Design	Implied by interrogation of AC Modules cross-referencing to a valid model #	n/a	n/a
AC Module Block	AC output voltage matches the premises connection	P&P Standard	Self-Test	Comparison of AC Module nominal voltage spec to voltage specified in permit	16	n/a
AC Module Block	AC Module output is protected by over current protection device per 690.9	690.9	Self-Test	Implied by branch circuit connection - combiner includes 20A breaker on each branch circuit input	14	n/a
AC Module Block	AC Module is labeled in accordance with NEC 690.51	690.51	Design	Implied by interrogation of AC Modules cross-referencing to a valid model #	n/a	n/a
AC Module Block	AC Modules are mounted in compliance with manufacturer specifications	Oregon, Wisc, IREC, EERE	Visual	Digital photograph of PV Array	n/a	1
AC Module Block	Roof penetrations are secure and weather tight		Visual	Digital photograph of racking system	n/a	3
AC Module Block	Electrical connections are properly terminated, have proper polarity, and are weather tight. Hard-wired connections maintain appropriate torque, clearance, creepage, etc.	110.3(B), 112	Self-Test	Detection of modules within branch circuit ensures terminations of all connections within the branch except for the terminal connection in the branch. Terminal connection in branch is detected using electronic end-cap detection. Fully connectorized.	15	n/a
AC Module Block	Electrical connections are fully and properly engaged	110.3(B), 110.12(A)	Design	Connectors have audible click to become fully engaged	n/a	n/a
AC Module Block	Exposed metal is bonded to equipment ground conductor though approved means	690.43, 250.110, 690.50	Design	Implied by interrogation of AC Modules cross-referencing to a valid model #	n/a	n/a
AC Module Block	Connectors listed to UL6703. Connectors are guarded (690.33(C)), polarized (690.33(B)), Have FMLB Grounding member 690.33(D))	690.33	Design	Implied by interrogation of AC Modules cross-referencing to a valid model #	n/a	n/a
AC Module Block	If not rated for interrupting current, module connectors are labeled with "Do Not Disconnect Under Load" or "Not for Current Interrupting."	690.33(E)	Design	Implied by interrogation of AC Modules cross-referencing to a valid model #	n/a	n/a
AC Module Block	# of paralleled AC sources per branch circuit matches plans	P&P Standard	Self-Test	Branch circuit mapping using controllable relays	11	n/a
AC Module Block	Ref ID 2				n/a	n/a
AC Module Block	AC Modules are Listed to UL1703	690.4(B)	Design	Implied by interrogation of AC Modules cross-referencing to a valid model #	n/a	n/a
AC Module Block	AC Module manufacturer and model # is in accordance with plans	690.4, 690.13	Self-Test	Interrogation of AC modules to ascertain that model # is valid	33	n/a
AC Module Block	AC Module is Listed to UL1741	690.4, 690.13	Design	Implied by interrogation of AC Modules cross-referencing to a valid model #	n/a	n/a
AC Module Block	AC Module is labeled in accordance with 690.13, 690.53, 690.56	690.13, 690.53, 690.56	Design	Implied by interrogation of AC Modules cross-referencing to a valid model #	n/a	n/a
AC Module Block	AC Module has an approved means to disconnect from ungrounded conductors of all sources, within or in sight of inverter.	690.13, 690.15	Design	Implied by interrogation of AC Modules cross-referencing to a valid model #	n/a	n/a
AC Module Block	AC output voltage matches the premises connection	P&P Standard	Self-Test	Comparison of AC Module nominal voltage spec to voltage specified in permit	37	n/a

Sub-System	Description	Reference(s)	Verification Method	Expanded Description of Verification Method	Self test reference	Vis doc reference
AC Module Block	AC Module output is protected by over current protection device per 690.9	690.9	Self-Test	Implied by branch circuit connection - combiner includes 20A breaker on each branch circuit input	35	n/a
AC Module Block	AC Module is labeled in accordance with NEC 690.51	690.51	Design	Implied by interrogation of AC Modules cross-referencing to a valid model #	n/a	n/a
AC Module Block	AC Modules are mounted in compliance with manufacturer specifications	Oregon, Wisc, IREC, EERE	Visual	Digital photograph of PV Array	n/a	1
AC Module Block	Roof penetrations are secure and weather tight		Visual	Digital photograph of racking system	n/a	3
AC Module Block	Electrical connections are properly terminated, have proper polarity, and are weather tight. Hard-wired connections maintain appropriate torque, clearance, creepage, etc.	110.3(B), 112	Self-Test	Detection of modules within branch circuit ensures terminations of all connections within the branch except for the terminal connection in the branch. Terminal connection in branch is detected using electronic end-cap detection. Fully connectorized.	36	n/a
AC Module Block	Electrical connections are fully and properly engaged	110.3(B), 110.12(A)	Design	Connectors have audible click to become fully engaged	n/a	n/a
AC Module Block	Exposed metal is bonded to equipment ground conductor though approved means	690.43, 250.110, 690.50	Design	Implied by interrogation of AC Modules cross-referencing to a valid model #	n/a	n/a
AC Module Block	Connectors listed to UL6703. Connectors are guarded (690.33(C)), polarized (690.33(B)), Have EMLB Grounding member 690.33(D))	690.33	Design	Implied by interrogation of AC Modules cross-referencing to a valid model #	n/a	n/a
AC Module Block	If not rated for interrupting current, module connectors are labeled with ""Do Not Disconnect Under Load" or "Not for Current Interrupting."	690.33(E)	Design	Implied by interrogation of AC Modules cross-referencing to a valid model #	n/a	n/a
AC Module Block	# of paralleled AC sources per branch circuit matches plans	P&P Standard	Self-Test	Branch circuit mapping using controllable relays	32	n/a
Cable Assembly	Ref ID 3				n/a	n/a
Cable Assembly	Conductor ampacity is sufficient for the max current of the connected source(s) per 690.8	690.8	Self-Test	Ampacity calculated based on (1) Cable AWG (implied by use of specialized connector); (2) ambient and rooftop temperature correction factors; and (3) adjustments for conduit conductor count; compared against branch circuit current output calculated from sum of AC Module current	20	n/a
Cable Assembly	Conductor voltage rating is sufficient for the connected source(s) per 690.7	690.7	Self-Test	voltage rating based on referenced cable specification; compared against permitted premises voltage	19	n/a
Cable Assembly	Conductors are protected by over current protection device per 690.9	690.9	Self-Test	calculated ampacity compared against implied connection to 20A breaker in combiner;	22	n/a
Cable Assembly	Cable Assembly is installed using an NEC-approved wiring method (e.g., 690.33, Chapter 3 / Article 300) for the application	690.33, 300, 110.8	Visual, Self-Test	Implied by referenced cable and conductor specification in conjunction with digital photograph of wiring method, showing guarding, etc. Compared against permit submittal	24	4
Cable Assembly	Conductors are appropriately color coded, Conductors of various PV source & output circuits grouped, identified	690.31(B)	Design	Part of cable assembly specification	n/a	n/a
Cable Assembly	Conductors are listed and specified for the application	690.31	Design	Part of cable assembly specification	n/a	n/a
Cable Assembly	Conductors are undamaged	110.12(B)	Visual	Digital photograph of branch circuit cabling	n/a	4
Cable Assembly	Conductor bend radius is within specification, sufficient clearance around connectors	336.24, IREC	Visual	Digital photograph of branch circuit cabling	n/a	4
Cable Assembly	Wiring is installed in a neat & workmanlike manner; Conductor follows the surface of the building	110.12, IREC	Visual	Digital photograph of branch circuit cabling	n/a	4
Cable Assembly	Cable or Raceway is adequately supported at 6' intervals	334.30	Visual	Digital photograph of branch circuit cabling	n/a	4
Cable Assembly	Raceways terminated by adequate fittings or other means	300.12	Visual	Digital photograph of branch circuit cabling	n/a	4
Cable Assembly	Raceways are mechanically continuous	300.12	Visual	Digital photograph of branch circuit cabling	n/a	4
Cable Assembly	Raceway is properly sized for conductors	300.17	Visual, Self-Test	Digital photograph of branch circuit cabling used to show proper conduit sizing, can be compared with permit	27	4
Cable Assembly	PV Source & Output circuits in readily accessible location are suitably guarded 150+VDC in an accessible location	690.31(A), 690.7(D)	Design	No DC circuits	n/a	n/a
Cable Assembly	Cable protected from physical damage by approved means: protected from touching roof or other abrasive surfaces exposing them to physical damage.	334.12, IREC	Visual	Digital photograph of conduit	n/a	n/a
Cable Assembly	PV Source & Output circuit conductors routed in a raceway that does not include conductors from other systems	690.31(B)	Design	No DC circuits	n/a	n/a
Cable Assembly	Equip ground conductor routed in the same raceway as other conductors	690.43, IREC	Design	EGC integrated into branch circuit cable assembly	n/a	n/a
Cable Assembly	Equipment Ground is suitably sized and specified	690.45, 690.46, 250.120(c), EERE, 250.120, 250.122	Design	EGC integrated into branch circuit cable assembly	n/a	n/a
Cable Assembly	Max DC bus voltage of series connected sources <600V	690.7C	Design	No DC circuits	n/a	n/a
Cable Assembly	Raceways, conduit, etc inside building shall be marked in accordance with 690.31(G)(3)	690.31(G)(3)	Visual	Designed for routing outside premises	n/a	4
Cable Assembly	Connectors listed for the purpose.	690.33	Design	Part of cable assembly specification	n/a	n/a
Cable Assembly	Electrical connections are properly terminated, have proper polarity, and are weather tight. Hard-wired connections maintain appropriate torque, clearance, creepage, etc.	110.3(B), 110.12(A)	Self-Test	Implied by detection of branch circuit. Fully connectorized.	23	n/a
Cable Assembly	Electrical connections are fully and properly engaged	110.3(B), 112	Design	Audible click	n/a	n/a
Cable Assembly	Ref ID 4				n/a	n/a

Fraunhofer USA

Sub-System	Description	Reference(s)	Verification Method	Expanded Description of Verification Method	Self test reference	Vis doc reference
Cable Assembly	Conductor ampacity is sufficient for the max current of the connected source(s) per 690.8	690.8	Self-Test	Ampacity calculated based on (1) Cable AWG (implied by use of specialized connector); (2) ambient and rooftop temperature correction factors; and (3) adjustments for conduit conductor count; compared against branch circuit current output calculated from sum of AC Module current	41	n/a
Cable Assembly	Conductor voltage rating is sufficient for the connected source(s) per 690.7	690.7	Self-Test	voltage rating based on referenced cable specification; compared against permitted premises voltage	40	n/a
Cable Assembly	Conductors are protected by over current protection device per 690.9	690.9	Self-Test	calculated ampacity compared against implied connection to 20A breaker in combiner;	43	n/a
Cable Assembly	Cable Assembly is installed using an NEC-approved wiring method (e.g., 690.33, Chapter 3 / Article 300) for the application	690.33, 300, 110.8	Visual, Self-Test	Implied by referenced cable and conductor specification in conjunction with digital photograph of wiring method, showing guarding, etc.	45	4
Cable Assembly	Conductors are appropriately color coded, Conductors of various PV source & output circuits grouped, identified	690.31(B)	Design	Part of cable assembly specification	n/a	n/a
Cable Assembly	Conductors are listed and specified for the application	690.31	Design	Part of cable assembly specification	n/a	n/a
Cable Assembly	Conductors are undamaged	110.12(B)	Visual	Digital photograph of branch circuit cabling	n/a	4
Cable Assembly	Conductor bend radius is within specification, sufficient clearance around connectors	336.24, IREC	Visual	Digital photograph of branch circuit cabling	n/a	4
Cable Assembly	Wiring is installed in a neat & workmanlike manner; Conductor follows the surface of the building	110.12, IREC	Visual	Digital photograph of branch circuit cabling	n/a	4
Cable Assembly	Cable or Raceway is adequately supported at 6' intervals	334.30	Visual	Digital photograph of branch circuit cabling	n/a	4
Cable Assembly	Raceways terminated by adequate fittings or other means	300.12	Visual	Digital photograph of branch circuit cabling	n/a	4
Cable Assembly	Raceways are mechanically continuous	300.12	Visual	Digital photograph of branch circuit cabling	n/a	4
Cable Assembly	Raceway is properly sized for conductors	300.17	Visual, Self-Test	Digital photograph of branch circuit cabling used to show proper conduit sizing, can be compared with permit	48	4
Cable Assembly	PV Source & Output circuits in readily accessible location are suitably guarded 150+VDC in an accessible location	690.31(A), 690.7(D)	Design	No DC circuits	n/a	n/a
Cable Assembly	Cable protected from physical damage by approved means: protected from touching roof or other abrasive surfaces exposing them to physical damage.	334.12, IREC	Visual	Digital photograph of conduit	n/a	n/a
Cable Assembly	PV Source & Output circuit conductors routed in a raceway that does not include conductors from other systems	690.31(B)	Design	No DC circuits	n/a	n/a
Cable Assembly	Equip ground conductor routed in the same raceway as other conductors	690.43, IREC	Design	EGC integrated into branch circuit cable assembly	n/a	n/a
Cable Assembly	Equipment Ground is suitably sized and specified	690.45, 690.46, 250.120(c), EERE, 250.120, 250.122	Design	EGC integrated into branch circuit cable assembly	n/a	n/a
Cable Assembly	Max DC bus voltage of series connected sources <600V	690.7C	Design	No DC circuits	n/a	n/a
Cable Assembly	Raceways, conduit, etc inside building shall be marked in accordance with 690.31(G)(3)	690.31(G)(3)	Visual	Designed for routing outside premises	n/a	4
Cable Assembly	Connectors listed for the purpose.	690.33	Design	Part of cable assembly specification	n/a	n/a
Cable Assembly	Electrical connections are properly terminated, have proper polarity, and are weather tight. Hard-wired connections maintain appropriate torque, clearance, creepage, etc.	110.3(B), 110.12(A)	Self-Test	Implied by detection of branch circuit. Fully connectorized.	44	n/a
Cable Assembly	Electrical connections are fully and properly engaged	110.3(B), 112	Design	Audible click	n/a	n/a
Combiner	Ref ID 5				n/a	n/a
Combiner	DC Combiners have a disconnect in the combiner, or within 1.8m of the combiner	690.15(C)	n/a		n/a	n/a
Combiner	Combiner model # is in accordance with plans	P&P Standard	Self-Test	Comparison of interogated model # to permit	n/a	n/a
Combiner	Combiner is listed to UL1741	690.4	Design	Implied by model #	n/a	n/a
Combiner	Voltage rating is sized for max voltage per 690.7	690.7	Self-Test	Comparison of permitted nominal voltage to voltage rating	53	n/a
Combiner	Max current per input circuit is less than <1.25 max input rating per input	690.8	Self-Test	Comparison of current rating, per spec, to actual max branch circuit current inputs	54	n/a
Combiner	Max combined current of paralleled sources is <1.25X max output rating of combiner	690.8	Self-Test	Comparison of current rating, per spec, to sum of max branch circuit current inputs	55	n/a
Combiner	Properly sized OCPD protects output	690.9	Self-Test	Comparison of OCPD in the SCD, per permit, to output current rating	57	n/a
Combiner	Connectors are appropriately listed for the application	690.33	Design	Based on device specification	n/a	n/a
Combiner	Electrical connections are properly terminated, have proper polarity, and are weather tight. Hard-wired connections maintain appropriate torque, clearance, creepage, etc.	110.3(B), 110.12(A)	Self-Test	Input connections implied based on detection of branch circuits, or suitable terminator on branch circuit input; Output connection implied based on detection of line voltage. Fully connectorized.	56	n/a
Combiner	Electrical connections are fully and properly engaged	110.3(B), 112	Design	Locking connector	n/a	n/a
Combiner	Enclosure is firmly secured to the mounting surface, and mounted in compliance with manufacturer specifications	110.3(B), 110.13	Visual	Digital photograph	n/a	5
Combiner	For any user-serviceable compartments: verify that the cover is closed and secured correctly	110.12(A)	Visual	Digital photograph	n/a	5
Combiner	Exposed metal is bonded to equipment ground conductor though approved means	690.43, 250.110, 690.50	Design	Non-metal enclosure	n/a	n/a
Cable Assembly	Ref ID 6				n/a	n/a

Fraunhofer USA

Sub-System	Description	Reference(s)	Verification Method	Expanded Description of Verification Method	Self test reference	Vis doc reference
Cable Assembly	Conductor ampacity is sufficient for the max current of the connected source(s) per 690.8	690.8	Self-Test	Ampacity calculated based on (1) Cable AWG (implied by use of specialized connector); (2) ambient and rooftop temperature correction factors; and (3) adjustments for conduit conductor count; compared against branch circuit current output calculated from sum of AC Module current	61	n/a
Cable Assembly	Conductor voltage rating is sufficient for the connected source(s) per 690.7	690.7	Self-Test	voltage rating based on referenced cable specification; compared against permitted premises voltage	60	n/a
Cable Assembly	Conductors are protected by over current protection device per 690.9	690.9	Self-Test	calculated ampacity compared against connection to OCPD in SCD	63	n/a
Cable Assembly	Cable assembly is an NEC-approved wiring method (e.g., 690.33, Chapter 3 / Article 300) for the application	690.33, 300, 110.8	Design	Cable routed in flexible conduit	n/a	n/a
Cable Assembly	Conductors are appropriately color coded, Conductors of various PV source & output circuits grouped, identified	690.31(B)	Design	Part of cable assembly specification	n/a	n/a
Cable Assembly	Conductors are listed and specified for the application	690.31	Design	Part of cable assembly specification	n/a	n/a
Cable Assembly	Conductors are undamaged	110.12(B)	Visual	Digital photograph of SCD connector cable	n/a	2
Cable Assembly	Conductor bend radius is within specification, sufficient clearance around connectors	336.24, IREC	Visual	Digital photograph of SCD connector cable	n/a	2
Cable Assembly	Wiring is installed in a neat & workmanlike manner; Conductor follows the surface of the building	110.12, IREC	Visual	Digital photograph of SCD connector cable	n/a	2
Cable Assembly	Cable or Raceway is adequately supported at 6' intervals	334.30	Visual	Digital photograph of SCD connector cable	n/a	2
Cable Assembly	Raceways terminated by adequate fittings or other means	300.12	Visual	Digital photograph of SCD connector cable	n/a	2
Cable Assembly	Raceways are mechanically continuous	300.12	Visual	Digital photograph of SCD connector cable	n/a	2
Cable Assembly	Raceway is properly sized for conductors	300.17	Design	Integral flex conduit	n/a	2
Cable Assembly	PV Source & Output circuits in readily accessible location are suitably guarded 150+VDC in an accessible location	690.31(A), 690.7(D)	Design	No DC circuits	n/a	n/a
Cable Assembly	Cable protected from physical damage by approved means: protected from touching roof or other abrasive surfaces exposing them to physical damage.	334.12, IREC	Visual	Digital photograph of SCD connector cable	n/a	2
Cable Assembly	PV Source & Output circuit conductors routed in a raceway that does not include conductors from other systems	690.31(B)	Design	No DC circuits	n/a	n/a
Cable Assembly	Equip ground conductor routed in the same raceway as other conductors	690.43, IREC	Design	EGC integrated into SCD cable assembly	n/a	n/a
Cable Assembly	Equipment Ground is suitably sized and specified	690.45, 690.46, 250.120(c), EERE, 250.120, 250.122	Design	EGC integrated into SCD cable assembly	n/a	n/a
Cable Assembly	Max DC bus voltage of series connected sources <600V	690.7C	Design	No DC circuits	n/a	n/a
Cable Assembly	Raceways, conduit, etc inside building shall be marked in accordance with 690.31(G)(3)	690.31(G)(3)	Visual	Designed for routing outside premises	n/a	2
Cable Assembly	Connectors listed for the purpose.	690.33	Design	Part of cable assembly specification	n/a	n/a
Cable Assembly	Electrical connections are properly terminated, have proper polarity, and are weather tight. Hard-wired connections maintain appropriate torque, clearance, creepage, etc.	110.3(B), 110.12(A)	Self-Test	Connection implied by detection of line voltage in the Combiner. Fully connectorized.	64	n/a
Cable Assembly	Electrical connections are fully and properly engaged	110.3(B), 112	Design	Audible click	n/a	n/a
Supply-Side Premises Interconnection	Ref ID 7				n/a	n/a
Supply-Side Premises Interconnection	Premises voltage matches nominal voltage of PV system	P&P Standard	Self-test	detected voltage within ANSI spec of nominal permitted voltage	74	n/a
Supply-Side Premises Interconnection	Backfeed overcurrent protection sized appropriately for generation source	690.9	Visual	Digital photograph of OCPD integrated into SCD	n/a	2
Supply-Side Premises Interconnection	Electrical connections are properly terminated, have proper polarity, and are weather tight. Hard-wired connections maintain appropriate torque, clearance, creepage, etc.	110.3(B), 110.12(A)	Design	Premises connection through a Solar Connection Device	n/a	n/a
Load-Side Premises Interconnection	Ref ID 7				n/a	n/a
Load-Side Premises Interconnection	Sum of PV breaker and panel main breaker less than 120% of panel rating	NEC	Visual	Digital photograph of service panel, indicating ratings.	n/a	6
Load-Side Premises Interconnection	Premises voltage matches nominal voltage of PV system	P&P Standard	Self-test	detected voltage within ANSI spec of nominal permitted voltage	74	n/a
Load-Side Premises Interconnection	Backfeed overcurrent protection sized appropriately for generation source	690.9	Visual	Digital photograph of OCPD integrated into SCD	n/a	n/a
Load-Side Premises Interconnection	Electrical connections are properly terminated, have proper polarity, and are weather tight. Hard-wired connections maintain appropriate torque, clearance, creepage, etc.	110.3(B), 110.12(A)	Design	Premises connection through a Solar Connection Device	n/a	n/a

A2.4 Electronic Self-Test Report

Item	Sub-System	Description	key name	actual value (d)	Passing Condition for Code Compliance Test			Passing condition for permit compliance test		
					LB	Spec	UB	LB	Spec	UB
1	PV System	Total # of ACMs	n_acm	Detected - interrogate ACMs in the system	n/a	n/a	n/a		n_acm_permit	n/a
2	PV System	Total # of branch circuits	n_branchcircuit	Use branch circuit detection to identify if ACMs are present on each branch circuit	1	n/a	1	n/a	n_branchcircuit_permit	n/a
3	PV System	Total pwr rating	ac_rating	Calculated = ACMs x pwr rating of each ACM	0	n/a	10000	ac_rating_permit x 0.99	n/a	ac_rating_permit x 1.01
4	PV System	P&P Part Model #	pnp_model_no	Detected - Hard-coded value in the PVSS	n/a	n/a	n/a	n/a	pnp_model_no_permit	n/a
5	PV System	Max Ambient temp	max_ambient_temp	Detected - hard code value for now. Future rev would cross-reference against NWS data based on location	n/a	n/a	n/a	max_ambient_temp_permit	n/a	n/a
6	PV System	Ambient temp on rooftop	rooftop_temp_adj	Detected - hard code value for now. Future rev would cross-reference against NWS data based on location	n/a	n/a	n/a	rooftop_temp_adj_permit	n/a	n/a
7	PV System	# of Functional Blocks	n_fcn_blocks	Detected - hard code - total number of blocks, including ACM branches, cables, SCD, etc	n/a	n/a	n/a	n/a	n_fcn_blocks_permit	n/a
8	AC Module Block	Functional Block Reference #	fcn_block_ref_no	1	n/a	n/a	n/a	n/a	n/a	n/a
9	AC Module Block	Subsystem Tag	tag	AC Module Block	n/a	n/a	n/a	n/a	n/a	n/a
10	AC Module Block	ACM power rating	ac_rating_acm	Reference - look up, based on ACM model #	n/a	n/a	n/a	n/a	n/a	n/a
11	AC Module Block	# of ACMs per branch	n_acm_bc	detected	0	n/a	12	n/a	n_acm_bc1_permit	n/a
12	AC Module Block	ACM Model #	model_no_acm	detected	n/a	n/a	n/a	n/a	model_no_acm1_permit	n/a
13	AC Module Block	branch circuit current	i_branch_circuit	calculated = # of ACMs x max current of ACM (per datasheet)	n/a	n/a	n/a	n/a	n/a	n/a
14	AC Module Block	Overcurrent protection	ocpd_branch_circuit	Circuit breaker size, referenced based on the CCU specification	1.25 x i_branch_circuit_actual	n/a	n/a	n/a	n/a	n/a
15	AC Module Block	Terminations	terminations_branch_circuit	detected - find the end cap. All other terminations are implied by connection of MIs to each other or to the drop cable assembly	n/a	2 x n_acm_bc1_actual	n/a	n/a	n/a	n/a
16	AC Module Block	ACM Voltage	v_acm	referenced (look up, based on ACM model #)	n/a	n/a	n/a	n/a	check the ac_voltage field in the premises electrical dataset	n/a
17	AC Module Block	ACM Max Continuous Current	i_max_acm	Reference, based on ACM model #	n/a	n/a	n/a	n/a	n/a	n/a
18	Cable Assembly	Functional Block Reference #	fcn_block_ref_no	2	n/a	n/a	n/a	n/a	n/a	n/a
19	Cable Assembly	Cable assembly voltage	v_cable	referenced (look up, based on hard-coded cable spec)	n/a	n/a	n/a	n/a	check the ac_voltage field in the premises electrical dataset	n/a
20	Cable Assembly	Cable assembly ampacity	ampacity_cable	calculated - max current based on the cable gauge x temp adj x fill factor adj	1.25 x i_branch_circuit_actual	n/a	n/a	n/a	n/a	n/a
21	Cable Assembly	Max current from parallel sources	max_parallel_current	Maximum backfeed current on to the circuit of all parallel connected sources - max should be the SCD overcurrent protection size + BC#2 OCPD size	n/a	n/a	n/a	n/a	n/a	n/a
22	Cable Assembly	Cable assembly OCPD	ocpd_cable	Circuit Breaker size - referenced based on the Combiner specification	1.25 x i_branch_circuit_actual Determined by - If max current from other parallel sources = 0, then LB = 0 If max current from other parallel sources < ampacity_cable_actual, then LB = 0 If max current from other parallel sources > ampacity_cable_actual, then LB = 1.25 x imax -> this is the applicable case	n/a	ampacity_cable_actual	n/a	n/a	n/a
23	Cable Assembly	Cable assembly terminations	terminations_cable	detected / implied by electrical connection between ACMs and the CCU	n/a	2	n/a	n/a	n/a	n/a
24	Cable Assembly	Cable assembly type	type_cable	Referenced based on combiner connector inlet	n/a	n/a	n/a	n/a	type_cable1_permit	n/a
25	Cable Assembly	Cable Assembly AWG	awg_cable	Referenced based on combiner connector inlet	n/a	n/a	n/a	n/a	awg_cable1_permit	n/a
26	Cable Assembly	Cable Assembly Max Current @ 3	i_max_30c_cable	Referenced based on combiner connector inlet	n/a	n/a	n/a	n/a	n/a	n/a
27	Cable Assembly	Cable Assembly # of Conductors	n_conductors_cable	Referenced based on combiner connector inlet	n/a	n/a	n/a	n/a	n_conductors_cable1_permit	n/a
28	Cable Assembly	Cable Assembly temp adjustment	temp_adj_cable	Reference - look up, based on temp factors	n/a	n/a	n/a	n/a	n/a	n/a
29	Cable Assembly	Cable Assembly fill Factor Adj.	ff_adj_cable	reference look up, based on # of conductors	n/a	n/a	n/a	n/a	n/a	n/a
30	AC Module Block	Functional Block Reference #	fcn_block_ref_no	3	n/a	n/a	n/a	n/a	n/a	n/a
31	AC Module Block	ACM power rating	ac_rating_acm	reference - based on ACM model #	n/a	n/a	n/a	n/a	n/a	n/a
32	AC Module Block	# of ACMs per branch	n_acm	detected	0	n/a	12	n/a	n_acm_bc2_permit	n/a
33	AC Module Block	ACM Model #	model_no_acm	detected	n/a	n/a	n/a	n/a	model_no_acm_bc2_permit	n/a
34	AC Module Block	branch circuit current	i_branch_circuit	calculated = # of ACMs x max current of ACM (per datasheet)	n/a	n/a	n/a	n/a	n/a	n/a
35	AC Module Block	Overcurrent protection	ocpd_branch_circuit	Circuit breaker size, referenced based on the CCU specification	1.25 x i_branch_circuit_actual	n/a	n/a	n/a	n/a	n/a
36	AC Module Block	Terminations	terminations_branch_circuit	detected - find the end cap. All other terminations are implied by connection of MIs to each other or to the drop cable assembly	n/a	2 x n_acm2_actual	n/a	n/a	n/a	n/a
37	AC Module Block	ACM Voltage	v_acm	referenced (look up, based on ACM model #)	n/a	n/a	n/a	n/a	check the ac_voltage field in the premises electrical dataset	n/a
38	AC Module Block	ACM Max Continuous Current	i_max_acm	referenced, based on ACM model #	n/a	n/a	n/a	n/a	n/a	n/a
39	Cable Assembly	Functional Block Reference #	fcn_block_ref_no	4	n/a	n/a	n/a	n/a	n/a	n/a
40	Cable Assembly	Cable assembly voltage	v_cable	referenced (look up, based on hard-coded cable spec)	n/a	n/a	n/a	n/a	check the ac_voltage field in the premises electrical dataset	n/a
41	Cable Assembly	Cable assembly ampacity	ampacity_cable	calculated - max current based on the cable gauge x temp adj x fill factor adj	1.25 x i_branch_circuit_actual	n/a	n/a	n/a	n/a	n/a

Item	Sub-System	Description	key name	actual value (d)	Passing Condition for Code Compliance Test			Passing condition for permit-compliance test		
					LB	Spec	UB	LB	Spec	UB
42	Cable Assembly	Max current from parallel sources	max_parallel_current	Maximum backfeed current on to the circuit of all parallel connected sources - max should be the SCD overcurrent protection size + DC#1 OCPD size	n/a	n/a	n/a	n/a	n/a	n/a
43	Cable Assembly	Cable assembly OCPD	ocpd_cable	Circuit Breaker size - referenced based on the Combiner specification	1.25 x i_branch_circuit_actual Determined by- if max current from other parallel sources = 0, then LB = 0 if max current from other parallel sources < ampacity_cable_actual, then LB = 0 if max current from other parallel sources > ampacity_cable_actual, then LB = 1.25 x imax -> this is the applicable case	n/a	ampacity_cable_actual	n/a	n/a	n/a
44	Cable Assembly	Cable assembly terminations	terminations_cable	detected / implied by electrical connection between ACMs and the CCU	n/a	2	n/a	n/a	n/a	n/a
45	Cable Assembly	Cable assembly type	type_cable	Referenced based on combiner connector inlet	n/a	n/a	n/a	n/a	type_cable2_permit	n/a
46	Cable Assembly	Cable Assembly AWG	awg_cable	Referenced based on combiner connector inlet	n/a	n/a	n/a	n/a	awg_cable2_permit	n/a
47	Cable Assembly	Cable Assembly Max Current @ 3	i_max_3ilc_cable	Referenced based on combiner connector inlet	n/a	n/a	n/a	n/a	n/a	n/a
48	Cable Assembly	Cable Assembly # of Conductors	n_conductors_cable	Referenced based on combiner connector inlet	n/a	n/a	n/a	n/a	n_conductors_cable2_permit	n/a
49	Cable Assembly	Cable Assembly temp adjustment	temp_adj_cable	Reference - look up, based on temp factors	n/a	n/a	n/a	n/a	n/a	n/a
50	Cable Assembly	Cable Assembly Fill Factor Adj.	ff_adj_cable	reference look up, based on # of conductors	n/a	n/a	n/a	n/a	n/a	n/a
51	Combiner	Functional Block Reference #	fcn_block_ref_no	5	n/a	n/a	n/a	n/a	n/a	n/a
52	Combiner	Combiner Model #	model_no_combiner	detected - Combiner spec	n/a	n/a	n/a	n/a	model_no_combiner_permit	n/a
53	Combiner	Combiner (CCU) Voltage rating	v_combiner	referenced (look up, based on Combiner spec)	n/a	n/a	n/a	n/a	check the ac_voltage field in the premises electrical dataset	n/a
54	Combiner	Combiner input current rating	i_input_combiner	referenced (look up, based on Combiner spec)	maximum of (1.25 x i_branch_circuit_actual)	n/a	n/a	n/a	n/a	n/a
55	Combiner	Combiner output current rating	i_output_combiner	referenced (look up, based on Combiner spec)	sum of bc currents (1.25 x i_branch_circuit_actual)	n/a	n/a	n/a	n/a	n/a
56	Combiner	Combiner terminations	terminations_combiner	detected - # of input connections + output connections	n/a	# of branch circuits + output connection	n/a	n/a	n/a	n/a
57	Combiner	Combiner Output OCPD	ocpd_combiner_output	Retrieve from the permit submittal - what is the size of the OCPD on the SCD	sum of bc currents (1.25 x i_branch_circuit_actual)	n/a	n/a	n/a	n/a	n/a
58	Combiner	Combiner voltage above lower bo	v_lb_meas_combiner	detected - actual voltage at CCU	231VAC	n/a	264VAC	n/a	n/a	n/a
59	Cable Assembly	Functional Block Reference #	fcn_block_ref_no	6	n/a	n/a	n/a	n/a	n/a	n/a
60	Cable Assembly	Cable assembly voltage	v_cable	referenced (look up, based on hard-coded cable spec)	n/a	n/a	n/a	n/a	check the ac_voltage field in the premises electrical dataset	n/a
61	Cable Assembly	Cable assembly ampacity	ampacity_cable	calculated - max current based on the cable gauge x temp adj x fill factor adj	n/a	n/a	sum of bc currents (1.25 x i_branch_circuit_actual)	n/a	n/a	n/a
62	Cable Assembly	Max current from parallel sources	max_parallel_current	Maximum backfeed current on to the circuit of all parallel connected sources - max should be the size of the SCD overcurrent protection	n/a	n/a	n/a	n/a	n/a	n/a
63	Cable Assembly	Cable assembly OCPD	ocpd_cable	Circuit Breaker size - referenced based on the Combiner specification	1.25 x sum of max branch circuit current out Determined by- if max current from other parallel sources = 0, then LB = 0 if max current from other parallel sources < ampacity_cable_actual, then LB = 0 if max current from other parallel sources > ampacity_cable_actual, then LB = 1.25 x imax -> this is the applicable case	n/a	ampacity_cable_actual	n/a	n/a	n/a
64	Cable Assembly	Cable assembly terminations	terminations_cable	detected / implied by electrical connection between ACMs and the CCU	n/a	2	n/a	n/a	n/a	n/a
65	Cable Assembly	Cable assembly type	type_cable	Referenced based on combiner connector inlet	n/a	n/a	n/a		type_cableoutput_permit	n/a
66	Cable Assembly	Cable Assembly AWG	awg_cable	Referenced based on combiner connector inlet	n/a	n/a	n/a	n/a	awg_cableoutput_permit	n/a
67	Cable Assembly	Cable Assembly Max Current @ 3	i_max_3ilc_cable	Referenced based on combiner connector inlet	n/a	n/a	n/a	n/a	n/a	n/a
68	Cable Assembly	Cable Assembly # of Conductors	n_conductors_cable	Referenced based on combiner connector inlet	n/a	n/a	n/a	n/a	n_conductors_cableoutput_permit	n/a
69	Cable Assembly	Cable Assembly temp adjustment	temp_adj_cable	Reference - look up, based on temp factors	n/a	n/a	n/a	n/a	n/a	n/a
70	Cable Assembly	Cable Assembly Fill Factor Adj.	ff_adj_cable	reference look up, based on # of conductors	n/a	n/a	n/a	n/a	n/a	n/a
71	Solar Connection Device	Functional Block Reference #	fcn_block_ref_no	7	n/a	n/a	n/a	n/a	n/a	n/a
72	Solar Connection Device	SCD Type	type_scd	detected - modbus polling of the SCD	n/a	n/a	n/a	n/a	n/a	n/a
73	Solar Connection Device	SCD Model #	model_no_scd	detected - modbus polling of the SCD	n/a	n/a	n/a	n/a	model_no_scd_permit	n/a
74	Solar Connection Device	Specified Voltage	v_scd	detected - modbus polling of the SCD	n/a	n/a	n/a	n/a	check the ac_voltage field in the premises electrical dataset	n/a

Fraunhofer USA

A2.5 Visual Documentation Plan

Description of Photograph
PV Array
SCD
Racking
Drop cables
Combiner
Service Panel

Untersuchung der Beeinflussung der Schutzkonzepte von Stromkreisen durch Stecker-Solar-Geräte

PI-Report-Number: 20170520

Client:

DGS - Deutsche Gesellschaft für Sonnenenergie
Landesverband Berlin Brandenburg e.V.
Erich-Steinfurth-Straße 8

Consultants:

PI Photovoltaik-Institut Berlin AG
Wrangelstraße 100
10997 Berlin
Germany

Autor: Marcus Vietzke
Messungen: Marcus Vietzke, Ralf Haselhuhn, Oliver Suchaneck, Prof. Dr.-Ing. Norbert Klaes; Ulrich Angersbach
Simulation: Tjarko Tjaden, Raphael Wedel, Dominik Colmsee, Festus Anyangbe; Marcus Vietzke
Audit: Ralf Haselhuhn, Dr. rer. nat. Paul Grunow, Prof. Dr.-Ing. habil. Stefan Krauter

In Kooperation mit:

Deutsche Gesellschaft für Sonnenenergie
International Solar Energy Society, German Section

Hochschule für Technik und Wirtschaft Berlin
University of Applied Sciences

indielux

Report-Number: 20170520

Client:	DGS - Deutsche Gesellschaft für Sonnenenergie
Address:	PI Photovoltaik-Institut Berlin AG Wrangelstraße 100 Gebäude 43 10997 Berlin Germany
Proposal number:	
Order number:	20170520
Order date:	2017-16-04
Delivery date:	2017-05-20
Test start:	2017-16-04
Test end:	2017-05-20
Responsible project engineer:	Marcus Vietzke

Person in charge
Dr. Paul Grunow

PI Photovoltaik-Institut Berlin AG
Wrangelstr. 100
D - 10997 Berlin
Tel.: +49 (0)30 814 52 64-0
Fax: +49 (0)30 814 52 64-101
www.pi-berlin.com

Checked by
Prof. Dr.-Ing. Stefan Krauter

This report is only valid with signature.

Inhalt

1 Personenschutz 5
1.1 Beeinflussung des Fehlerstrom-Schutzschalters 5
1.1.1 Fragestellung: 5
1.1.2 Hypothesen 5
1.1.3 Testaufbau und Ablauf 5
1.1.4 Messergebnisse 6
1.1.4.1 Spannung 6
1.1.4.2 Auslöseströme ohne Stecker-Solar-Gerät 6
1.1.4.3 Auslöseströme mit Letrika-Wechselrichter 6
1.1.4.4 Auslöseströme mit Steca-Wechselrichter 6
1.1.4.5 Auslöseströme mit AE-Conversion-Wechselrichter 6
1.1.5 Auswertung 6
1.2 Schutz gegen elektrischen Schlag 7
1.3 Empfehlungen 8
2 Leitungsschutz 8
2.1 Belastung der Leitungen 8
2.1.1 Fragestellung 8
2.1.2 Theorie 8
2.1.3 Reserven für Dauerbetrieb 9
2.1.4 Testaufbau und Ablauf 9
2.1.4.1 Verlegebedingung: A2 worst case 9
2.1.4.2 Verlegebedingung: A2 10
2.1.4.3 Verlegebedingung: B2 10
2.1.4.4 Verlegebedingung: E 10
2.1.5 Messergebnisse 11
2.1.5.1 Verlegebedingung: A2 worst case 11
2.1.5.2 Verlegebedingung: A2 11
2.1.5.3 Verlegebedingung: B2 12
2.1.5.4 Verlegebedingung: E 12
2.1.5.5 Zusammenfassung 13
2.1.6 Worst Case Betrachtung 13
2.1.7 Betroffene Leitungen 13
2.1.8 Überführung in Berechnungsformeln 14

2.1.9 Untersuchung der Leiterströme 15
2.1.9.1 Maximale Leiterströme 15
2.1.9.2 Reale Leiterströme 18
2.1.9.3 Kurzschluss 18
2.1.10 Untersuchung der Leitertemperaturen 19
2.1.10.1 Maximale Leitertemperaturen bei verschiedenen Einbausituationen 19
2.1.10.2 Dynamisch auftretende Leitermaximaltemperaturen 21
2.1.10.3 Reale Leitertemperaturen 22
2.1.11 Untersuchung der Alterung der Isolierung 22
2.1.11.1 bei maximalem Strom 23
2.1.11.2 bei Referenzlastprofil H0 23
2.1.12 Normative Einordnung 24
2.2 Belastung der Kontaktstellen 25
2.2.1 Brände und Brandtote in Deutschland 25
2.2.2 Brandwahrscheinlichkeit 26
2.2.3 Betroffene Kontaktstellen 26
2.2.4 Brandwahrscheinlichkeit bei maximalem Leiterstrom (I_n*1,13) 27
2.2.5 Brandwahrscheinlichkeit bei Referenzlastprofil H0 27
2.3 Vergleich mit anderen Kraftwerken 27
2.4 Auswertung 28
2.5 Handlungsempfehlung 28
3 Anhang 29
3.1 Test und Messgeräte 29
3.2 Simulationsparameter 29
3.3 Code 30
3.4 Literaturverzeichnis 37
3.5 Abbildungsverzeichnis 38

1 Personenschutz

1.1 Beeinflussung des Fehlerstrom-Schutzschalters

1.1.1 Fragestellung:

Es soll überprüft werden, ob der Parallelbetrieb eines Stecker-Solar-Gerätes die Funktion von RCD (Fehlerstrom-Schutzschaltern) beeinträchtigt.

1.1.2 Hypothesen

Ein RCD löst beim Parallelbetrieb eines Stecker-Solarmoduls nicht mehr bei 30 mA, sondern erst bei 30 mA plus dem vom Wechselrichter abgegebenem Strom aus.

RCD vom Typ A erfassen nur sinusförmige Wechselströme (AC) und pulsierende Gleichfehlerströme (DC). Es besteht die Befürchtung, dass Gleichfehlerstrom-Fehler durch den Wechselrichter hindurch bis auf die AC-Seite des Wechselrichters übertragen werden. Bei glatten Gleichfehlerströmen findet keine Übertragung, also keine Induktion in der Sekundärwicklung statt - der Fehlerstrom wird nicht erkannt. Ab 150 mA könnten diese Ströme für Personen lebensgefährlich sein.

Bei einer Mischform (glatter Gleichfehlerstrom überlagert durch Wechselfehlerstrom) kann der Wechselfehlerstrom nur geschwächt oder gar nicht übertragen werden, da der Eisenkern teilweise oder sogar komplett durch den glatten Gleichfehlerstrom vormagnetisiert ist. Es besteht die Möglichkeit, dass der RCD geblendet wird, also nicht mehr korrekt bei Wechselstromfehlern auslöst.

1.1.3 Testaufbau und Ablauf

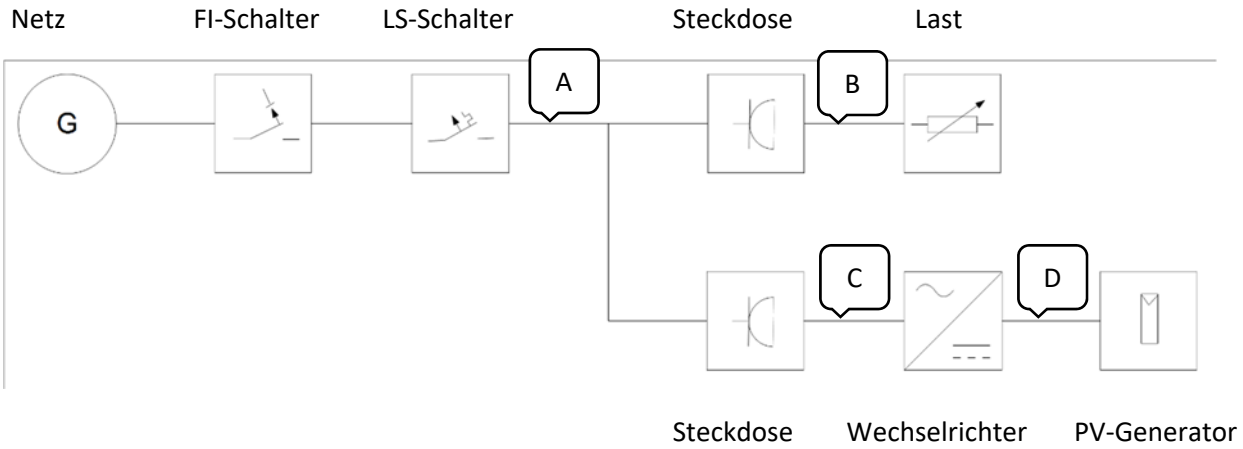

Auf den Einbau von Steckdosen wurde für den Test verzichtet. Das Photovoltaikmodul wurde unter STC-Bedingungen bestrahlt, bis der Wechselrichter im MPP arbeitet. Fehlerstrom zwischen B und Erde wurde bis zum Auslösen des FI erhöht und gemessen. Fehlerströme zwischen D und Erde wurden nicht gemessen, da hier eine Kleinspannung, die die Grenzwerte für den Spannungsbereich I nach IEC 60449 nicht überschreitet, anliegt. Die Grenzwerte sind für Wechselspannung (AC) ≤ 50 V und für Gleichspannung (DC) ≤ 120 V entsprechend der Grenze für die dauernd zulässige Berührungsspannung für Erwachsene und normale Anwendungsfälle nicht lebensbedrohlich.

1.1.4 Messergebnisse

1.1.4.1 Spannung

Netzspannung: 239,5 V

1.1.4.2 Auslöseströme ohne Stecker-Solar-Gerät

	Auslösestrom	Strom zum Verbraucher	Widerstand Erdschluss
	mA	mA	kΩ
1. Versuch	20,5	140	11,6
2. Versuch	21,2	140	11,35
3. Versuch	20,7	140	11,57

1.1.4.3 Auslöseströme mit Letrika-Wechselrichter

	Auslösestrom	Strom zum Verbraucher	Strom vom Wechselrichter	Summenstrom	Widerstand Erdschluss	Strom im DC Kreis
	mA	mA	mA	mA	kΩ	A
1. Versuch	21,5	120				8,2
2. Versuch	20,9	120	760	640	11,4	8,1
3. Versuch	20,7	120	720	590		4,8

1.1.4.4 Auslöseströme mit Steca-Wechselrichter

	Auslösestrom	Strom zum Verbraucher	Strom vom Wechselrichter	Summenstrom	Widerstand Erdschluss	Strom im DC Kreis
	mA	mA	mA	mA	kΩ	A
1. Versuch	21,3	120	780	670	11,34	4,8
2. Versuch	21,1	120	760	640		4,8

1.1.4.5 Auslöseströme mit AE-Conversion-Wechselrichter

	Auslösestrom	Strom zum Verbraucher	Strom vom Wechselrichter	Summenstrom	Widerstand Erdschluss	Strom im DC Kreis
	mA	mA	mA	mA	kΩ	A
1. Versuch	20,9	120	690	580		7,6

1.1.5 Auswertung

Eine Beeinflussung des RCD konnte nicht nachgewiesen werden.

Modulwechselrichter sind typischerweise galvanisch trennend, da ein Trafo benötigt wird, um die Netzspannung nachbilden zu können. Bei diesen Geräten ist eine Übertragung von Gleichstromfehlern auf die AC-Seite bauartbedingt ausgeschlossen.

Jeder Wechselrichter muss der EN 62109-1 und -2 entsprechen. Darin ist gefordert, dass ein RCD Typ A nicht unzulässig beeinflusst werden darf. Sollte diese Anforderung nicht erfüllt werden, muss in der Anleitung auf die Notwendigkeit zur Installation eines RCD Typ B hingewiesen werden.

1.2 Schutz gegen elektrischen Schlag

Es wird immer wieder das Risiko eines Stromschlags am Stecker Typ F (Schukostecker) der Stecker-Solar-Geräte angeführt. Bei Wechselrichtern mit NA-Schutz ist dieses Risiko jedoch ausgeschlossen.

Solange nur ein Wechselrichter mit dem Stecker verbunden ist, trennt der NA-Schutz gemäß VDE-AR-N 4105 die Stromerzeugungseinrichtung einfehlersicher nach maximal 0,2 Sekunden. Einfehlersicherheit bedeutet in diesem Fall: Es sind zwei in Reihe geschaltete, unabhängig angesteuerte Schaltelemente vorhanden. Selbst beim Ausfall eines Schalters bleibt die Funktion erhalten.

Diese Abschaltzeit unterschreitet deutlich die Anforderungen an Fehlerstromschutzschalter nach DIN VDE 0100-410: Die Abschaltzeit für Endstromkreise mit Steckdosen oder mit festem Anschluss für Handgeräte beträgt bei einer Nennspannung von bis zu 230 Volt 0,4 Sekunden.

Sie erfüllen damit vollständig die Anforderungen der EN 60335-1:2012 Abschnitt 22.5:
Geräte, die mit einem Stecker an die Stromversorgung angeschlossen werden, müssen so gebaut sein, dass im sachgemäßen Gebrauch keine Gefahr eines elektrischen Schlags […] besteht, wenn die Stifte des Steckers berührt werden. Prüfung wie folgt: [..] Eine Sekunde nach der Trennung wird die Spannung zwischen den Stiften des Steckers mit einem Messinstrument gemessen, das den zu messenden Wert nicht merklich beeinflusst. Die Spannung darf 34 V nicht überschreiten.

Zudem erfüllen sie die Anforderungen der DIN EN 60204-1 (VDE 0113-1):2007-06 Abschnitt 18.5 Schutz gegen Restspannung:
Bei Steckern muss die Ladung nach dem Herausziehen aus der Steckdose innerhalb eines Zeitraums von 1 s auf 60 V oder weniger reduziert sein. Erst bei längeren Entladungszeiten müssen die Stecker gegen direkte Berührung mindestens nach IP2X geschützt sein. Die in DIN VDE V 0628-2 beschriebene Wieland RST20i3 Steckverbindung mit Schutzart IP6X ist daher überdimensioniert.

Viele Geräte mit Elektromotoren wie beispielsweise Staubsauger werden beim Ziehen des Steckers bis zum Stillstand des Motors zum Generator. Hier wird beispielsweise bei einem Staubsauger die Spannungsfreiheit des Steckers erst nach einer Sekunde gefordert.

Wenn mehrere Wechselrichter oder zusätzliche Verbraucher an einem Stecker-Typ F parallelgeschaltet werden, besteht die Möglichkeit, dass die am Wechselrichtereingang anliegende Spannung und Frequenz nicht die Parameter des NA-Schutzes nach VDE-AR-N 4105 verlässt. In diesem Fall muss der Wechselrichter erst nach 5 Sekunden abschalten.[1] Dies kann aber durch normative Vorgaben, wie beispielsweise die Einschränkung auf einen Wechselrichter pro Stecker unterbunden werden.

Der Stecker-Typ F hat den Praxistest mit 200.000 installierten Stecker-Solar-Geräten in den Niederlanden bereits bestanden und entspricht damit den allgemein anerkannten Regeln der Technik (aaRdT).

Höhere Schutzziele, sind kompatibel mit Typ F-Steckdosen möglich.

[1] Dieser Fall konnte im Labor nicht herbeigeführt werden.

1.3 Empfehlungen

- Für Stecker-Solar-Geräte sollten nur Wechselrichter nach EN 62109-1 und -2, die einen RCD Typ A nicht unzulässig beeinflussen, eingesetzt werden.
- Ggf. sind für Stecker-Solar-Geräte nur Wechselrichter mit Trafo geeignet.
- Stecker-Solar-Geräte mit mehreren Wechselrichtern müssen nachweisen, dass sie schnell genug abschalten, um die Bedingungen der EN 60335-1 und DIN EN 60204-1 einzuhalten.

2 Leitungsschutz

2.1 Belastung der Leitungen

2.1.1 Fragestellung

Es soll untersucht werden, ab welcher Leistung der Parallelbetrieb eines Stecker-Solar-Gerätes eine Gefährdung für die bestehenden Elektroinstallationen darstellt.

2.1.2 Theorie

In der Parallelschaltung summieren sich die Ströme. Der maximale Strom im Leiter B ergibt sich aus der Summe des Prüfstroms (Nennstrom * 1,13) des MCB (Leitungsschutzschalters) im Leiter A plus dem PV-Generatorstrom im Leiter C.

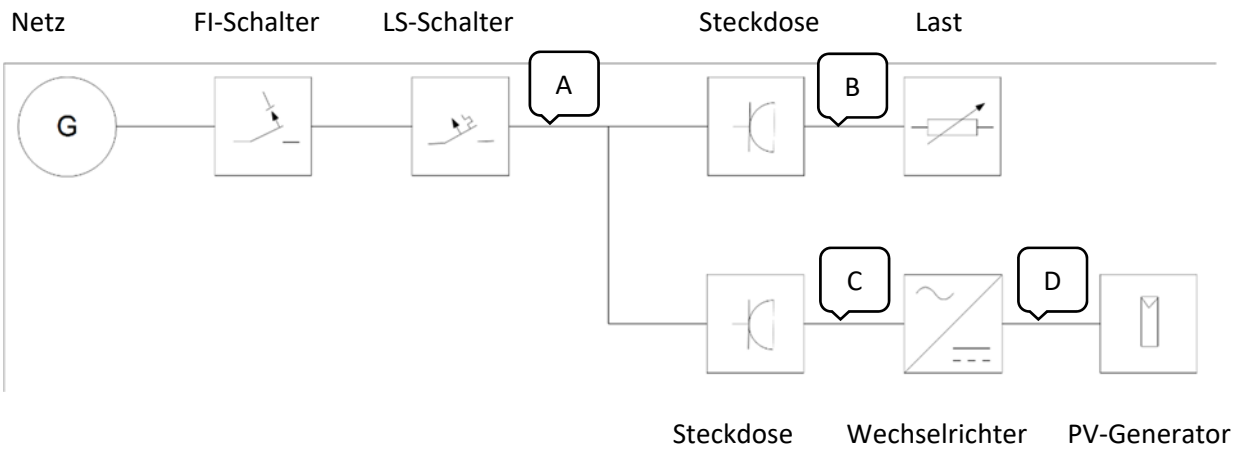

Damit ist es möglich, dass der Leiter B mit höheren Strömen, als durch die Auslegung nach VDE 0298-4 zulässig ist, belastet wird.

2.1.3 Reserven für Dauerbetrieb

Allerdings besteht in den meisten Fällen eine Reserve für Dauerbetrieb nach Tabelle 1

Tabelle 1 Stromreserven bei Dauerbetrieb von Kabeln und Leitungen nach DIN VDE 0298-4 bei 25°C Umgebungstemperatur

Referenz-Verlegeart	A2	B2	C	E
Verlegebedingung	Verlegung in wärmegedämmten Wänden	Verlegung in Elektroinstallationsrohren oder geschlossenen Elektroinstallationskanälen auf oder in Wänden oder in Kanälen für Unterflurverlegung	Direkte Verlegung auf oder in Wänden/Decken oder in ungelochten Kabelrinnen	Verlegung frei in Luft, an Tragseilen sowie auf Kabelleitern und -konsolen oder in ungelochten Kabelrinnen
Anzahl der gleichzeitig belasteten Adern	2	2	2	2
Strombelastbarkeit Iz in A bei Nennquerschnitt 1,5 mm²	16,5	17,5	21	23
maximal zulässiger Bemessungsstrom für Steckdosen Stromkreise In in A	16	16	16	16
Reserve für den Dauerbetrieb in A	0,5	1,5	5	7

Stecker-Solar-Geräte speisen nur zeitweise ein und wenn dann meist mit einem Teil der Nennleistung. Die Grenzwerte der VDE 0298-4 beziehen sich jedoch auf Dauerbetrieb. Kurzfristig sind normativ aber auch höhere Ströme zulässig, so erlaubt die DIN VDE 0100-430 bei Kurzschlussströmen für bis zu 5 Sekunden Temperaturen bis 160 °C. Auch Stecker-Solar-Geräte können kurzfristig eine Heraufsetzung der maximalen Leiterströme verursachen. Dies wird im Folgenden untersucht.

2.1.4 Testaufbau und Ablauf

Eine strominduzierte Aufheizkurve einer NYM-J 3x1,5mm² Mantelleitung wird für folgende Verlegebedingung experimentell bestimmt.

2.1.4.1 Verlegebedingung: A2 worst case

Die Mantelleitung wurde zwischen zwei Styropor EPS 040 WI/DI/DZ 1000 x 500 x 100 mm mit einer Wärmeleitfähigkeit von 0,04 W/(mK) gemäß Abbildung 1: Messaufbau eingebaut.

Abbildung 1: Messaufbau A2 worst case

2.1.4.2 Verlegebedingung: A2

Die Mantelleitung wurde gemäß DIN VDE 0298-4 Anhang C.3.3 (Verlegung in wärmegedämmten Wänden) mit folgendem Wandaufbau eingebaut:

- äußere Beplankung mit 10 mm Holzfaserplatten,
- Wärmedämmung mit 100 mm Mineralfaser,
- innere Beplankung mit 25 mm Holzfaserplatte mit einer spezifischen Wärmeleitfähigkeit von 0,1 W/K·m senkrecht zur Plattenebene und 0,23 W/K·m parallel zur Plattenebene.

Abbildung 2: Messaufbau A2

Dieser Wandaufbau stellt nach Aussage der Studiengemeinschaft für Fertigbau die am stärksten wärmegedämmte Wand im Fertighausbau in Deutschland dar. (DIN VDE 0298-4)

2.1.4.3 Verlegebedingung: B2

Die Mantelleitung wurde in einen geschlossenen Elektroinstallationskanal eingebaut.

2.1.4.4 Verlegebedingung: E

Die Mantelleitung wurde frei in Luft vermessen.

2.1.5 Messergebnisse

2.1.5.1 Verlegebedingung: A2 worst case

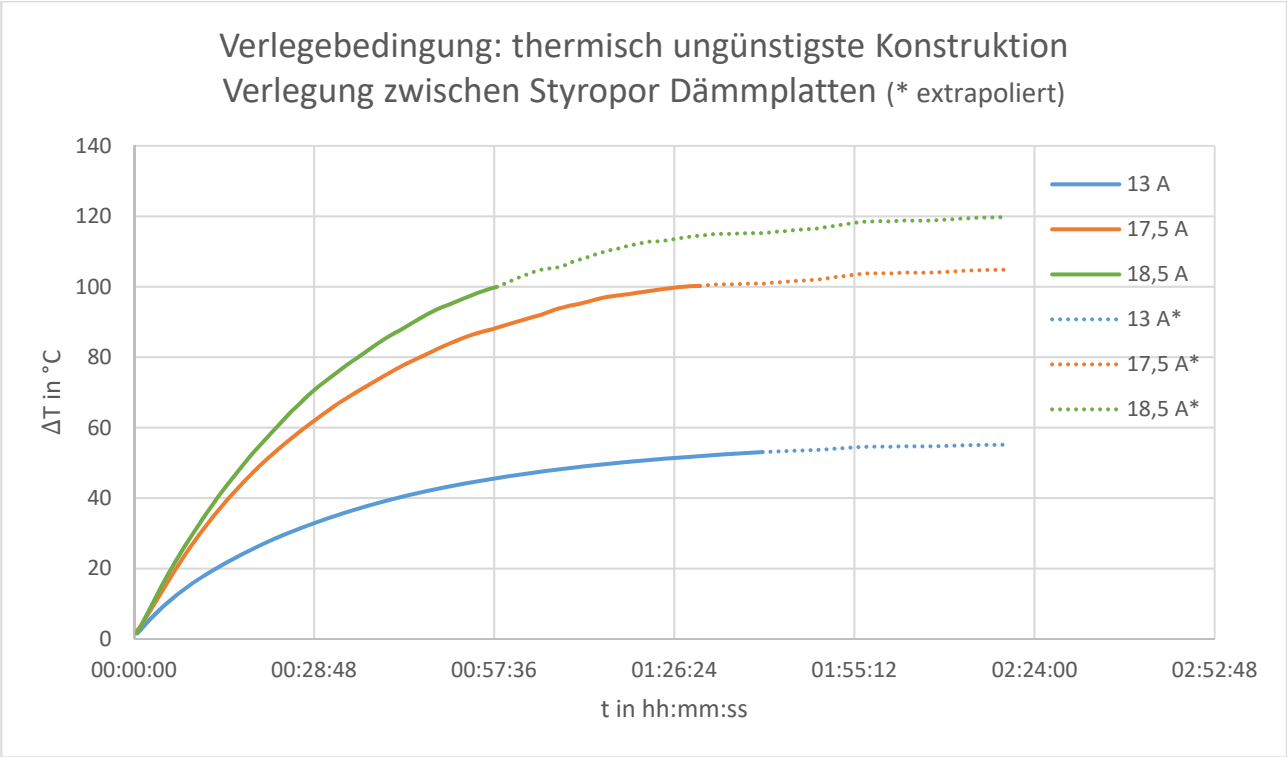

2.1.5.2 Verlegebedingung: A2

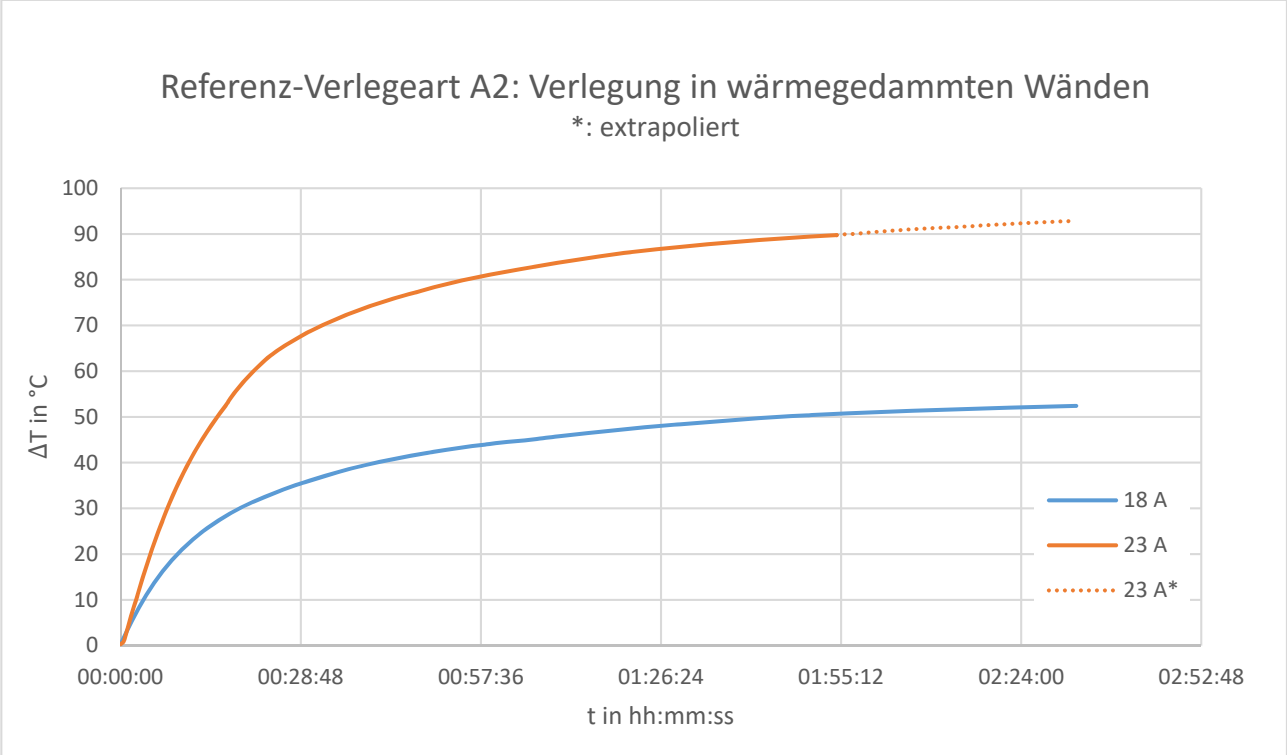

2.1.5.3 Verlegebedingung: B2

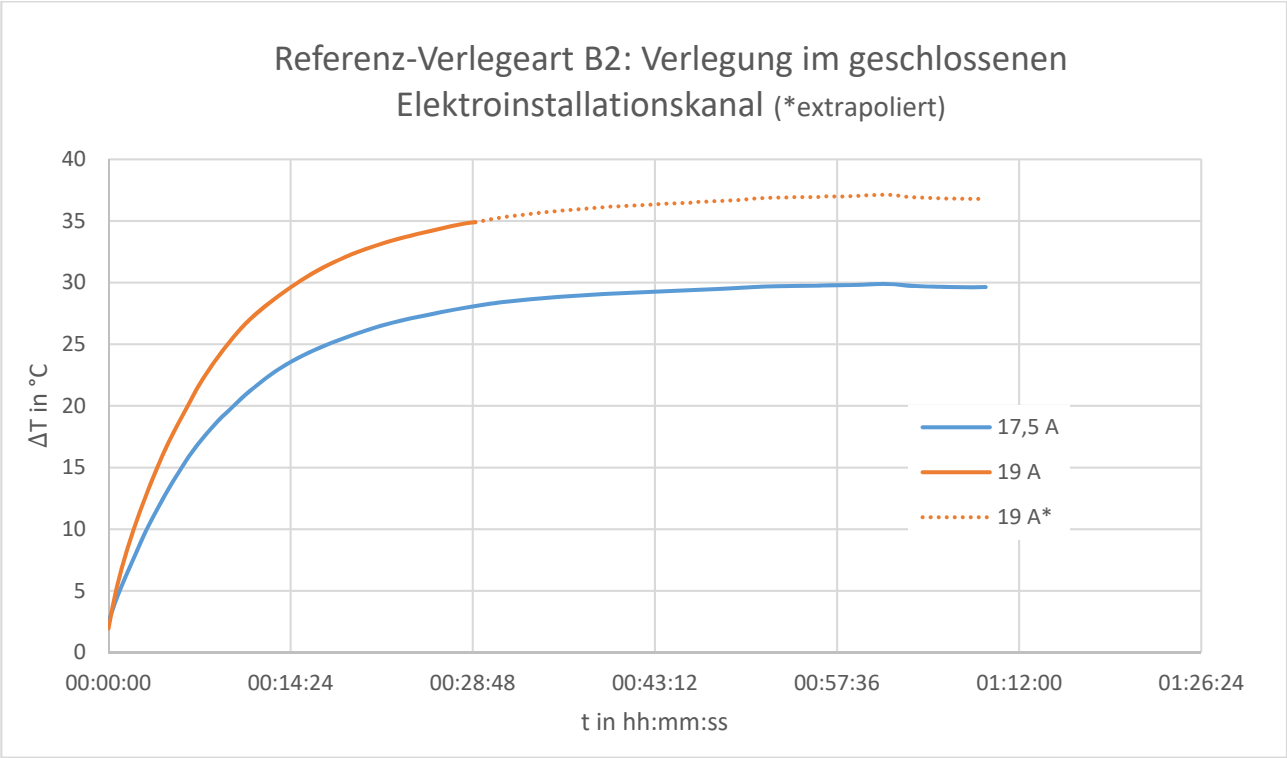

2.1.5.4 Verlegebedingung: E

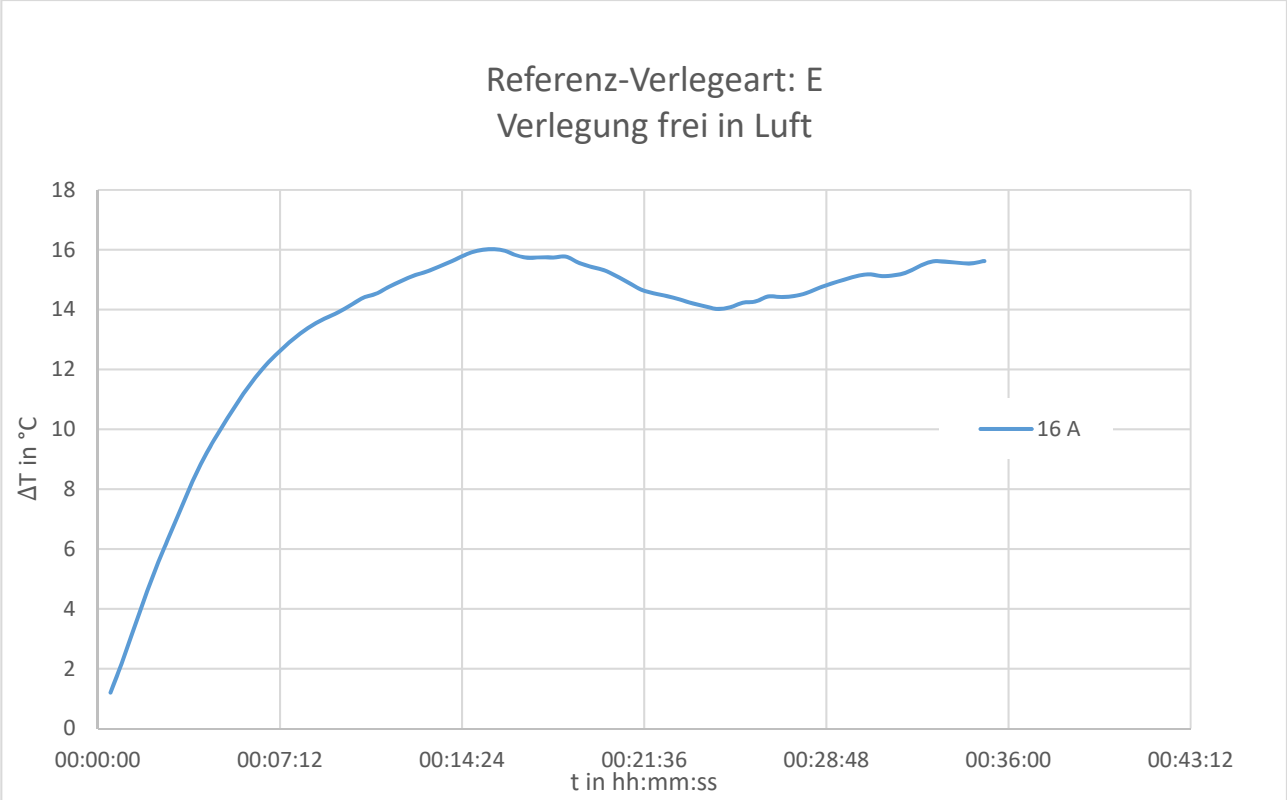

2.1.5.5 Zusammenfassung

Bei schlechterer Wärmeabfuhr steigt die Leiteroberflächentemperatur. Zugleich nimmt aber auch die Dauer bis zum Auftreten der maximalen Temperaturen zu.[2]

2.1.6 Worst Case Betrachtung

Ältere, z.B. stoffummantelte Leitungen, wurden in Steckdosenstromkreisen mit 10 A abgesichert. Zudem treten niedrigere Temperaturen auf, da diese nicht in Dämmung verlegt wurden, C ist hier die thermisch ungünstigste Verlegeart. Die Reserve bei 25°C Umgebungstemperatur beträgt 11 A.

Aluminium-Leitungen (wie sie oft in den neuen Bundesländern eingesetzt wurden) wurden mit 2,5 mm² Querschnitt ausgeführt und mit 10 A abgesichert.[3] Zudem treten niedrigere Temperaturen auf, da diese nicht in Dämmung verlegt wurden, B2 ist hier die thermisch ungünstigste Verlegeart. Die Reserve bei 25°C Umgebungstemperatur beträgt mindestens 5 A.

Bei Verlegebedingungen A2 bei 30°C Umgebungstemperatur treten niedrigere Temperaturen auf, da laut DIN VDE 0298-4 mit max. 13 A abzusichern ist. Die Reserve beträgt 2,5 A.

Bei Verlegebedingungen A2 bei 25°C können die ungünstigsten thermischen Verhältnisse auftreten. Die Reserve beträgt 0,5 A. Diese wurde daher für alle Häufungen und Umgebungstemperaturen näher untersucht.

2.1.7 Betroffene Leitungen

Ein durchschnittlicher deutscher Haushalt hat 42,7 m² Wohnfläche; zwei Zimmer, Küche, Bad, Flur/Diele (Statistisches Bundesamt). Nach RAL-RG678 hat diese Wohnung folgende Mindestausstattungsmerkmale für Stromkreise:

- Anzahl der Beleuchtungs- und Steckdosenstromkreise: 3
- Anzahl der Steckdosen: 19
- Anzahl der Lichtauslässe: 11

Daraus ergibt sich durchschnittlich folgende Situation für den Stromkreis, in dem ein Stecker-Solar-Gerät angeschlossen ist:

---

[2] Mit * gekennzeichnete Werte wurden extrapoliert

[3] Die Verlustleistung eines 2,5 mm² Aluminiumleiters ist kleiner als die Verlustleistung eines 1,5 mm² Kupferleiters

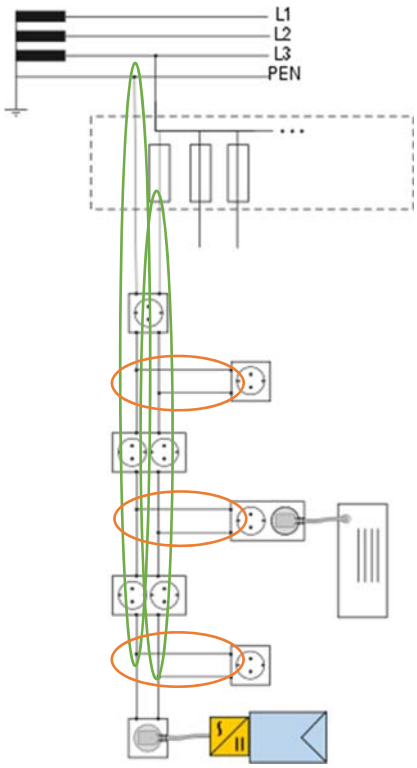

Abbildung 3: Stromkreis mit Stecker-Solar-Gerät

Dabei setzt das Stecker-Solar-Gerät den maximalen Strom auf den rot markierten Leitungen hoch. Im Realbetrieb reduziert es aber die Stromspitzen auf den grün markierten Leitungen. Beide Auswirkungen werden in den folgenden Kapiteln näher untersucht.

2.1.8 Überführung in Berechnungsformeln

Aus den Messungen wurden die folgenden Formeln abgeleitet[4]:

Verlegebedingung	**A2 worst case**	**A2**	**B2**
Leiterendtemperatur	$T_{A2*.max} = 0{,}2022 * I^{2{,}1861}$	$T_{A2.max} = 0{,}0615 * I^{2{,}3347}$	$T_{B2.max} = 0{,}0158 * I^{2{,}6352}$
Leitertemperatur nach 60 min	$T_{A2*.1h} = 0{,}1534 * I^{2{,}2255}$	$T_{A2.1h} = 0{,}0336 * I^{2{,}4855}$	$T_{B2.1h} = 0{,}0158 * I^{2{,}6352}$

Beispielhaft wird in der folgenden Grafik die Leitungserwärmung in Abhängigkeit vom Leiterstrom für A2 dargestellt:

[4] Keine ausreichende Datenlage für Verlegeart E

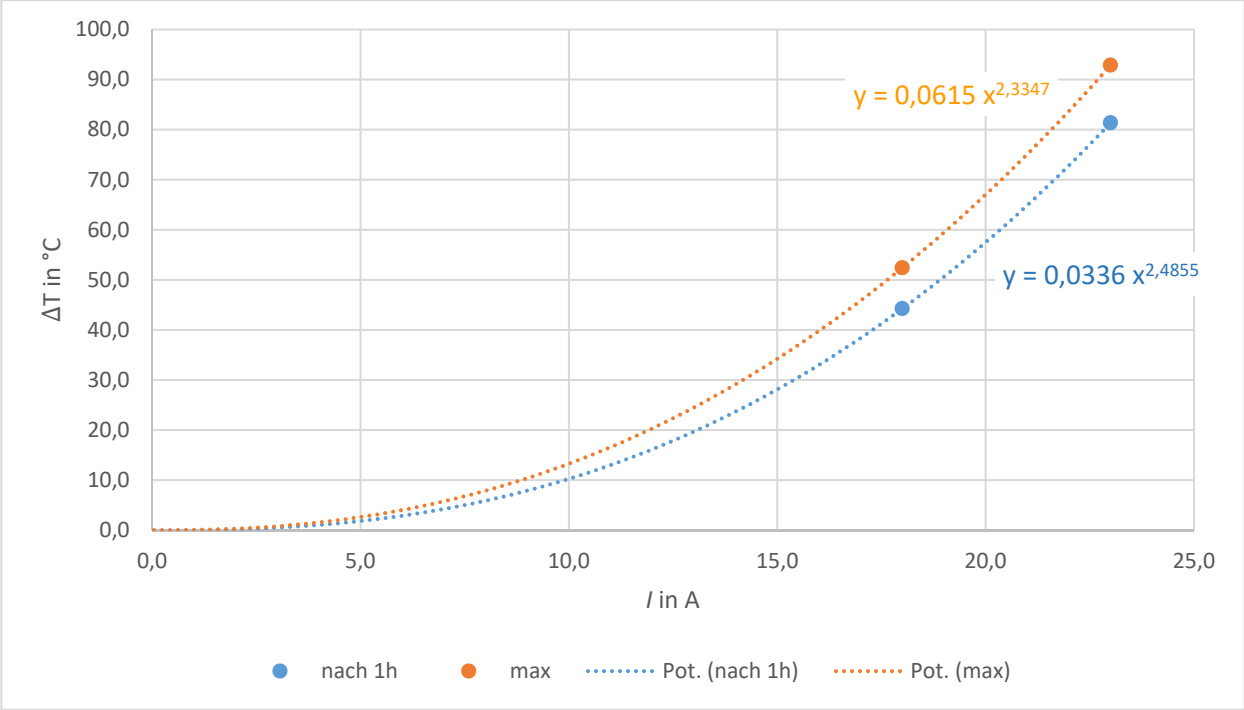

Abbildung 4: ΔT = f (*I*) bei A2 Verlegung in wärmegedämmten Wänden

2.1.9 Untersuchung der Leiterströme

2.1.9.1 Maximale Leiterströme

Für die Betrachtung der Leiterströme sind drei Größen relevant: Der Nennstrom I_n; der kleinere Prüfstrom $I_n \cdot 1{,}13$ und der größere Prüfstrom $I_n \cdot 1{,}45$ (bei dem der MCB gemäß Abbildung 5 nach spätestens einer Stunde auslösen muss).

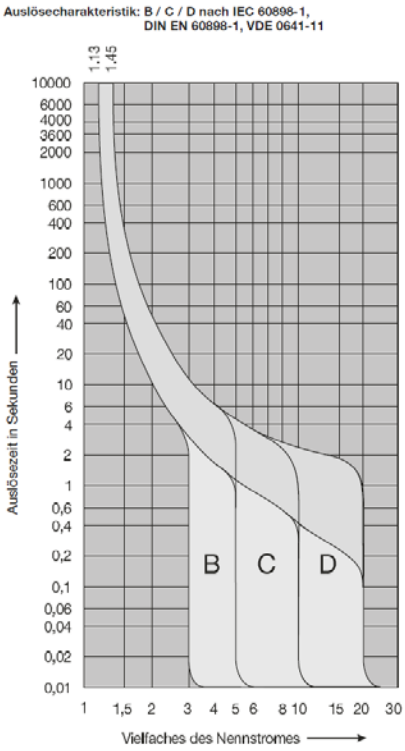

Abbildung 5: Auslösecharakteristik nach DIN EN 60898-1, VDE 0641-11

Mit den Formeln aus Kapitel 2.1.8 wurde die maximale Leiteroberflächentemperatur mit und ohne 2,6 Ampere-Einspeisung für Nenn-, kleinen Prüfstrom und großen Prüfstrom berechnet.

	A2 worst case		**A2**		**B2**		
	ohne Einspeisung	mit 2,6 A Einspeisung	ohne Einspeisung	mit 2,6 A Einspeisung	ohne Einspeisung	mit 2,6 A Einspeisung	
max. Leiterstrom bei MCB Nennstrom	10,0	12,6	16,0	18,6	16,0	18,6	A
max. Leiterstrom bei kleinem Prüfstrom des MCB	11,3	13,9	18,1	20,7	18,1	20,7	A
max. Leiterstrom bei großem Prüfstrom des MCB	14,5	17,1	23,2	25,8	23,2	25,8	A
Temperaturerhöhung bei Nennstrom	31,0	51,4	39,8	56,6	23,5	35,0	°C
Temperaturerhöhung bei kleinem Prüfstrom	40,5	63,8	53,0	72,5	32,5	46,3	°C
Temperaturerhöhung bei großem Prüfstrom	58,9	85,1	83,2	108,4	62,7	82,9	°C
Leitertemperatur bei 25°C bei Nennstrom	56,0	76,4	64,8	81,6	48,5	60,0	°C
Leitertemperatur bei 25°C bei kleinem Prüfstrom	65,5	88,8	78,0	97,5	57,5	71,3	°C
Leitertemperatur bei 25°C bei großem Prüfstrom	83,9	110,1	108,2	133,4	87,7	107,9	°C

Dabei zeigt sich, dass die Leitertemperatur bei A2 ohne Einspeisung bei 25°C Umgebungstemperatur bei kleinem Prüfstrom über 70°C liegt. Zudem liegt die Leitertemperatur bei allen Verlegebedingungen ohne Einspeisung bei 25°C bei großem Prüfstrom über 70°C.[5]

Diese maximalen Temperaturen sind nur in seltensten Fällen zu erreichen. Um dies näher zu untersuchen, wurde eine Simulation mit den Parametern aus Kapitel 3.2 durchgeführt. Beispielhaft ist in Abbildung 6 der maximale Leiter-Strom für Referenzverlegeart A2 an dem Tag maximaler, durchschnittlicher und minimaler Einstrahlung dargestellt:

[5] Nach DIN EN 60898-1, VDE 0641-11 muss der MCB interhalb einer Stunde bei großem Prüfstrom auslösen

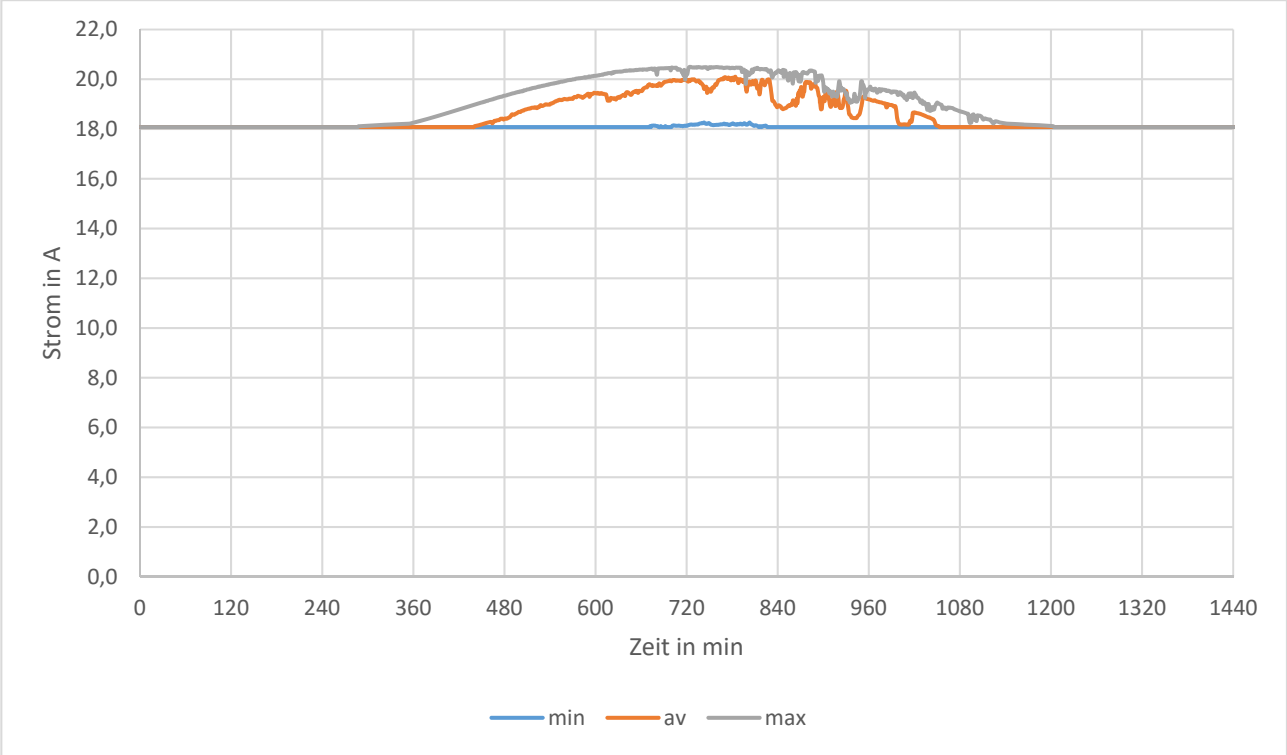

Abbildung 6: Strom (I_n·1,13) mit 2,6 A Stecker-Solar-Gerät

Zudem wurde die Häufigkeitsverteilung der Ströme simuliert:

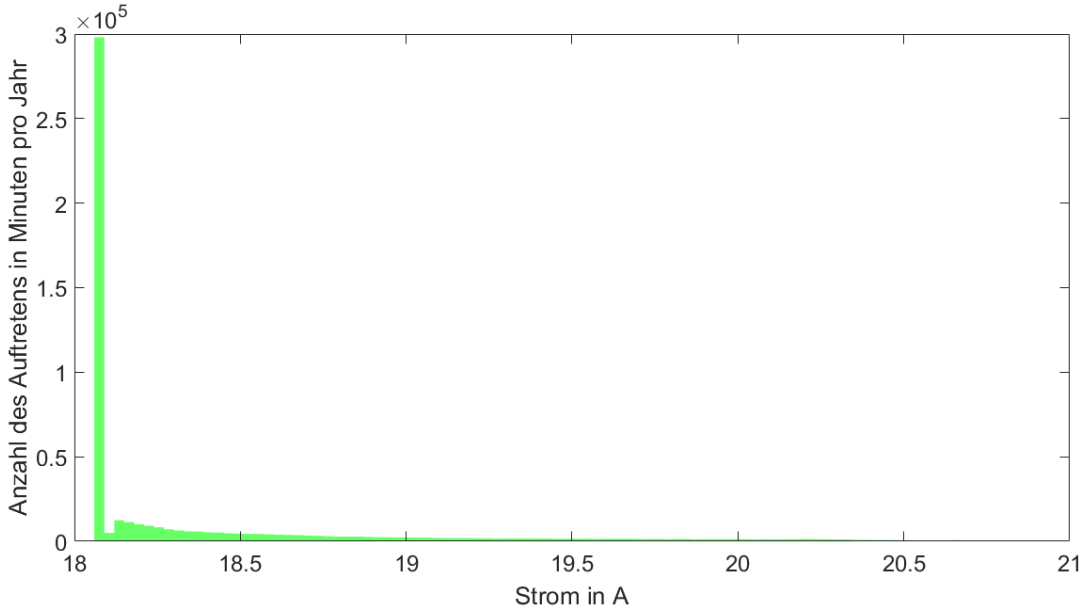

Abbildung 7: Häufigkeitsverteilung der maximalen Ströme

Der mittlere maximale Leiterstrom steigt von 18,1 A um 0,3 A auf 18,4 A.

Damit ein Überlastfall eintritt, der zur Überlastung, nicht aber zur Auslösung des MCB führt, müssen folgende Umstände gleichzeitig auftreten:

1. Der Verbrauch im Steckdosenstromkreis ist genau so groß (20,7 A), dass abzüglich des maximalen Stromflusses des Stecker-Solar-Gerätes (2,6 A) nicht mehr als 18,1 A (16 A · 1,13) über den Leitungsschutzschalter fließen.

2. Der Verbrauch bleibt über längere Zeit konstant, d.h. dass weder mehr Strom fließt (wodurch der Automat auslöst), noch weniger, so dass auf der betroffenen Leitung kein Überlastfall auftreten kann.
3. Die Einstrahlungsverhältnisse sind über längere Zeit so hoch, dass die maximale Einspeisung aus dem Stecker-Solar-Gerät erhalten bleibt. Die Solarmodule erbringen nur ihre maximale Leistung und damit auf der Wechselstromseite 2,6 A, wenn diese bei vollem Sonnenschein senkrecht beschienen werden und ihre Modultemperatur 25°C (sehr kühles Wetter) beträgt.

2.1.9.2 Reale Leiterströme

Dies wird auch anhand der Häufigkeitsverteilung der realen Ströme von 222 Lastprofilen die in ihrer Summe H0 (Referenzlastprofil, siehe Kapitel 2.1.11.2) entsprechen für die in Kapitel 2.1.7 grün markierten Leiter deutlich:

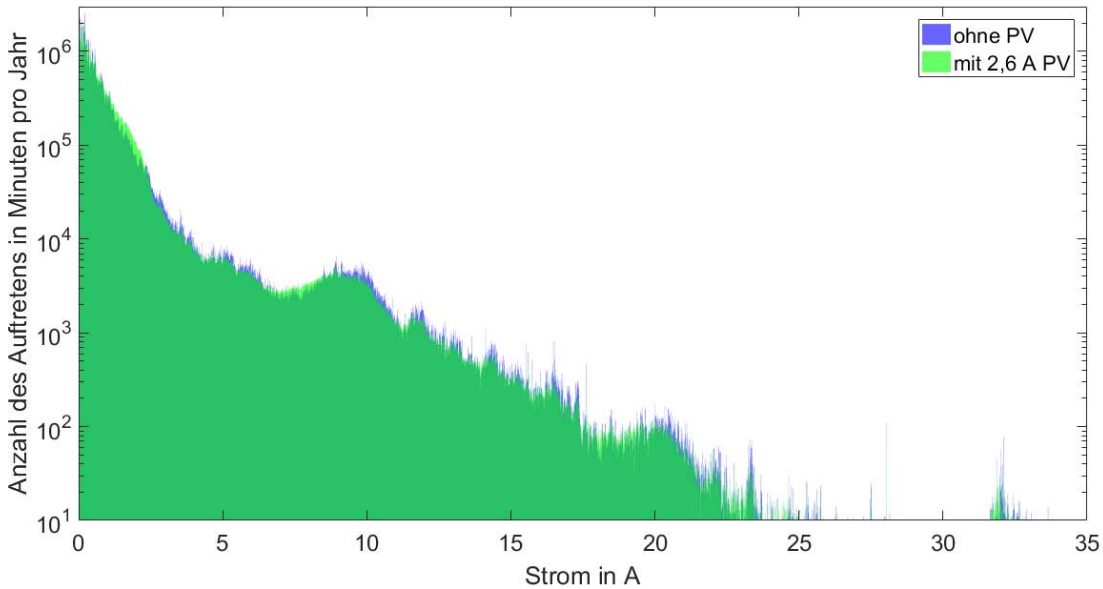

Abbildung 8: Ströme bei H0 (Referenzlastprofil) mit und ohne 2,6 A Stecker-Solar-Gerät

Hier zeigt sich, dass nur die Ströme bis 2,4 A zunehmen. Insbesondere die hohen Ströme nehmen durch ein 2,6 A Stecker-Solar-Gerät ab.

2.1.9.3 Kurzschluss

Eine Beeinträchtigung der LS-Auslösung bei Kurzschluss findet nicht statt, da der Kurzschlussstrom um wenigstens Faktor 10 höher ist als der Auslösestrom des LS-Schalters. Zudem hat die Stromspitze eine Trennung durch den magnetischen Auslöser des LS-Schalters zur Folge.

2.1.10 Untersuchung der Leitertemperaturen

2.1.10.1 Maximale Leitertemperaturen bei verschiedenen Einbausituationen

Laut DIN VDE 0298-4 sind 1,5 mm² Kupferleitungen mit zwei belasteten Adern bei Verlegebedingungen A2 wie folgt abzusichern:

Tabelle 2: Absicherung einer 1,5 mm² Kupferleitung gemäß DIN VDE 0298-4

Häufung \ Umgebungstemperatur in °C	25	30	35	40	45	50	55	60	65
1	16	13	13	13	10	10	6	6	
2	13	10	10	10	6	6	6	6	
3	10	10	10	6	6	6	6		
4	10	10	6	6	6	6	6		
5	6	6	6	6	6	6			
6	6	6	6	6	6	6			
7	6	6	6	6	6	6			
8	6	6	6	6	6				
9	6	6	6	6	6				
10	6	6	6	6					
12	6	6	6	6					
14	6	6	6						
16	6	6	6						
18	6	6							
20	6								

Dabei können bei $I_n \cdot 1{,}13$ folgende Leitertemperaturen erreicht werden:

Tabelle 3: max. Leitertemperaturen ohne Stecker-Solar-Gerät

Häufung \ Umgebungstemperatur in °C	25	30	35	40	45	50	55	60
1	78,0	62,6	67,6	72,6	62,7	67,7	60,4	65,4
2	90,2	65,4	70,4	75,4	55,7	60,7	65,7	70,7
3	78,0	83,0	88,0	56,1	61,1	66,1	71,1	
4	95,7	100,7	56,5	61,5	66,5	71,5	76,5	
5	51,8	56,8	61,8	66,8	71,8	76,8		
6	57,2	62,2	67,2	72,2	77,2	82,2		
7	62,6	67,6	72,6	77,6	82,6	87,6		
8	67,9	72,9	77,9	82,9	87,9			

Bei einer normgerechten Installation laut DIN VDE 0298-4 können bis zu 100,7 °C erreicht werden. Die Reduktionsfaktoren der DIN VDE 0298-4 für Häufung und Umgebungstemperaturen reichen nicht aus, um die Leitungstemperaturen auf dem Niveau ohne Häufung zu betreiben.[6]

Nun wurde auf einer Leitung ein Einspeiser mit 2,6 Ampere hinzugefügt und erneut die Temperaturen für die in Kapitel 2.1.7 rot markierten Leiter berechnet.

[6] Bei der Häufung werden vermutlich Gleichzeitigkeitsfaktoren berücksichtig, da die Wahrscheinlichkeit, dass alle Leitungen gleichzeitig voll belastet werden, mit steigender Häufung rapide sinkt.

Tabelle 4: max. Leitertemperaturen mit 2,6 A Stecker-Solar-Gerät

Häufung	Umgebungstemperatur in °C							
	25	*30*	*35*	*40*	*45*	*50*	*55*	*60*
1	97,5	77,7	82,7	87,7	73,7	78,7	66,4	71,4
2	105,3	76,4	81,4	86,4	61,8	66,8	71,8	76,8
3	89,0	94,0	99,0	62,2	67,2	72,2	77,2	
4	106,7	111,7	62,5	67,5	72,5	77,5	82,5	
5	57,9	62,9	67,9	72,9	77,9	82,9		
6	63,3	68,3	73,3	78,3	83,3	88,3		
7	68,6	73,6	78,6	83,6	88,6	93,6		
8	74,0	79,0	84,0	89,0	94,0			

Mit zusätzlichen 2,6 A auf einer Leitung können bis zu 112 °C erreicht werden. Dabei kann im ungünstigsten Fall die Temperatur um 11 Grad über den Temperaturen ohne Stecker-Solar-Gerät liegen.

In Deutschland sind mit Photovoltaik Systemnutzungsgrade von 14% zu erreichen. Es müssten also theoretisch mehr als sieben Erzeugungsgeräte eingesetzt werden, um die Leitungen mit einer ähnlichen Wahrscheinlichkeit zu nutzen, wie sie bei einer Häufung von 7 möglich ist. Die Wahrscheinlichkeit, dass mit einem 2,6 A Stecker-Solar-Gerät 98 °C erreicht werden ist dabei deutlich kleiner als das ohne dieses Gerät 101 °C auftreten.

Die maximal auftretenden Leitungstemperaturen werden im Abbildung 9 in Abhängigkeit vom Generatorstrom dargestellt.

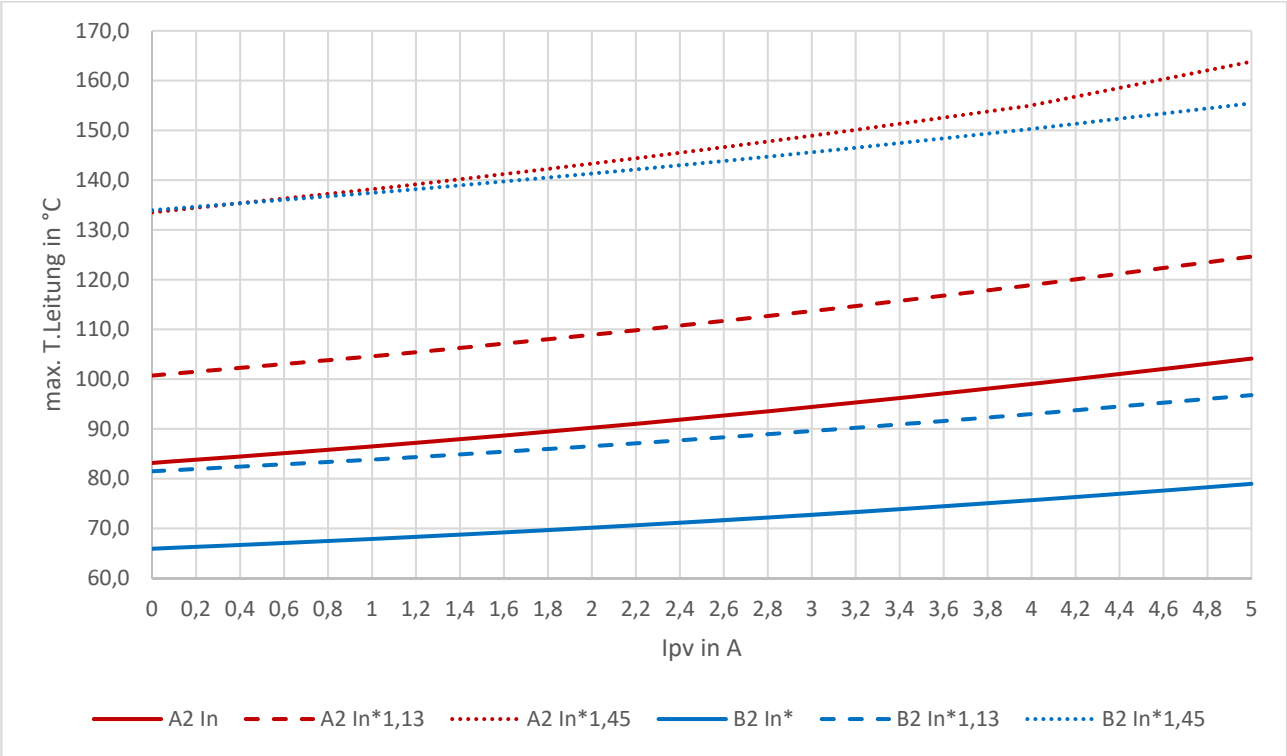

Abbildung 9: max. Leitungstemperatur = f(Generatorstrom) über Umgebungstemperaturen 25°-60 °C und Häufungen 1-8

Es zeigt sich hierbei, dass erst bei einem Stecker-Solar-Gerät mit einem Einspeisestrom ab 3,2 A die ersten kritischen Temperaturen erreicht werden können. Dagegen sind mit einem 2,6 A Stecker-Solar-Gerät bei keiner Einbausituation (über alle Häufungen und Umgebungstemperaturen) brandrelevante Temperaturen erreichbar.

2.1.10.2 Dynamisch auftretende Leitermaximaltemperaturen

Bei der maximalen Strombelastung $I_n \cdot 1{,}13 + I_{PV}$ sind folgende Leiter maximal Temperaturen erreichbar:

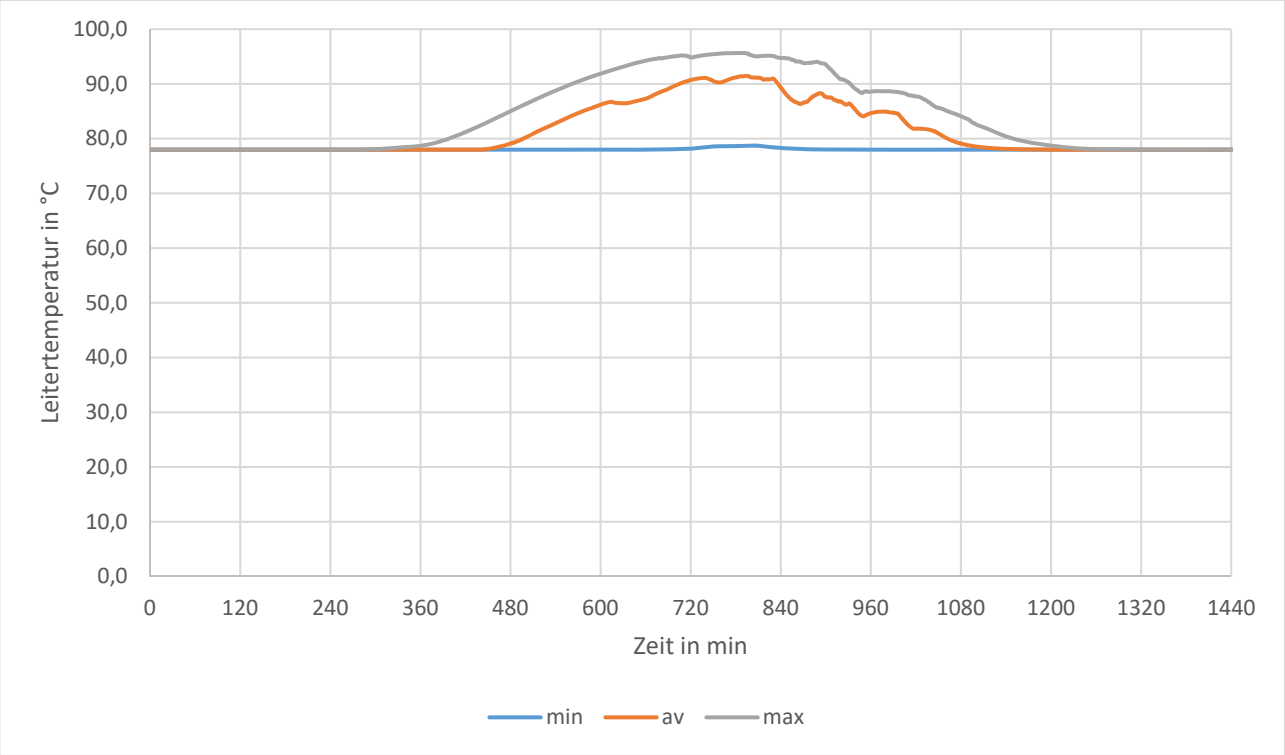

Abbildung 10: maximale Leitertemperatur bei $I_n \cdot 1{,}13 + I_{pv}$

Zudem wurde die Häufigkeitsverteilung der maximalen Leitertemperaturen simuliert:

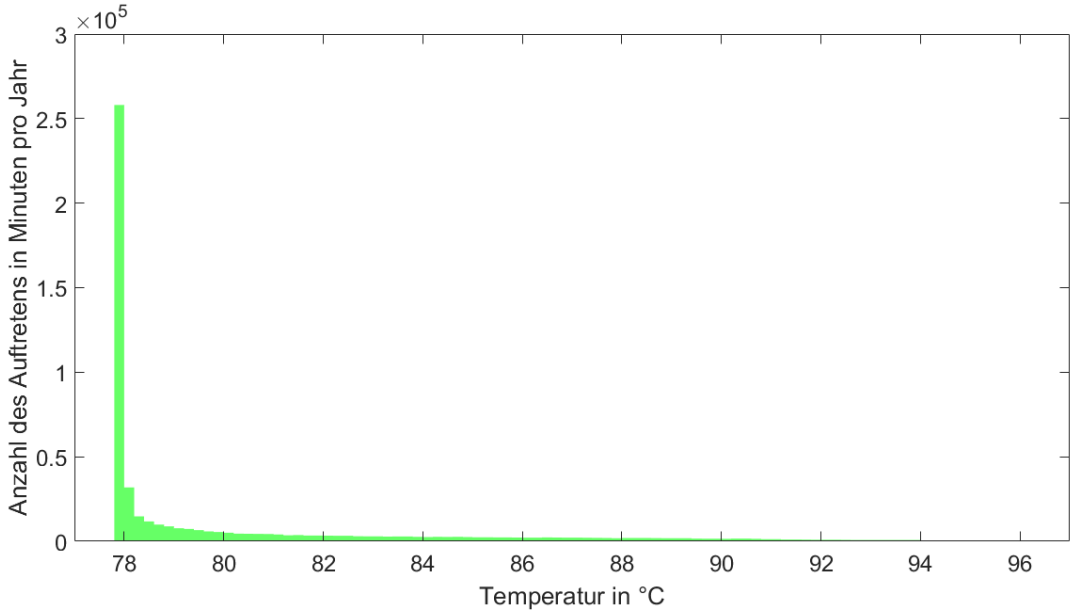

Abbildung 11: Häufigkeit der maximalen Temperaturen mit 2,6 A Stecker-Solar-Gerät

Die mittlere maximale Leitertemperatur steigt von 80 °C um 0,3°C auf 80,3 °C. In keinem der Fälle erreicht die Leitertemperatur brandrelevante Temperaturen.

Tabelle 5: brandrelevante Temperaturen von Baustoffen (Dr. Thomas Erge, 2017)

Temperatur	Eigenschaften/Grenzwerte
150 °C	PVC bildet Chlorwasserstoffgas
160 °C	Maximale Kurzschlusstemperatur
200 °C	Zersetzungstemperatur PVC
200 °C	Min. Flammpunkte von Baustoffen

2.1.10.3 Reale Leitertemperaturen

Dies wird auch anhand der Häufigkeitsverteilung der realen Temperaturen von 222 Lastprofilen, die in ihrer Summe H0 entsprechen für die in Kapitel 2.1.7 grün markierten Leiter deutlich:

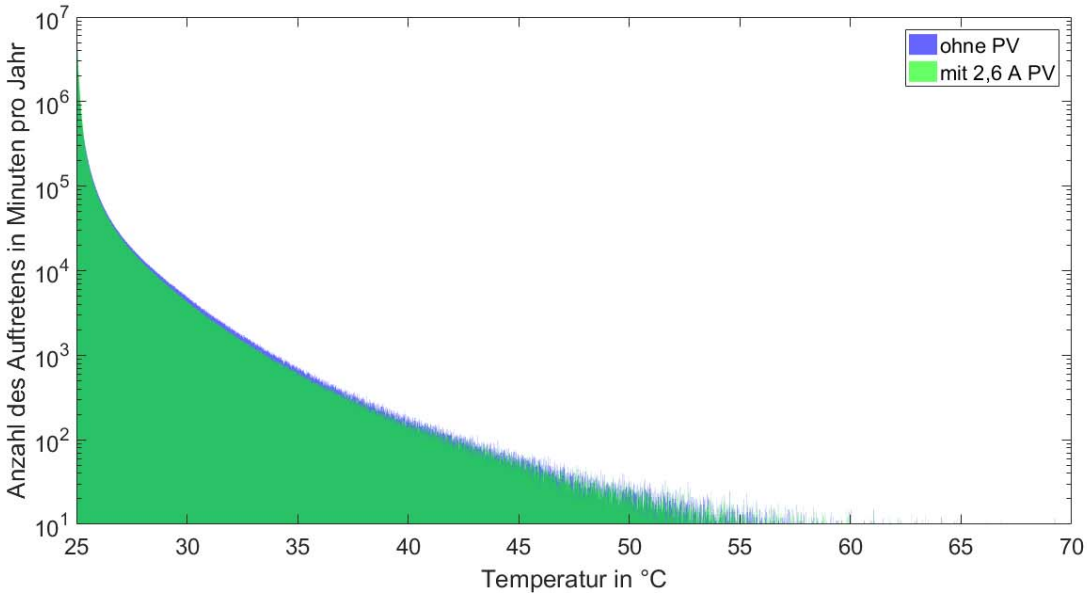

Abbildung 12: Temperaturen bei H0 mit und ohne 2,6 A Stecker-Solar-Gerät

Hier zeigt sich, dass nur Temperaturen bis 25,4 °C häufiger auftreten. Insbesondere die hohen Temperaturen treten hingegen seltener auf.

2.1.11 Untersuchung der Alterung der Isolierung

Neben der Verhinderung von Bränden hat die Strombegrenzung durch den MCB auch die Aufgabe, die Isolierung vor beschleunigter Alterung zu schützen. Die Alterung von Kunststoffen ist eine Funktion der Temperatur. Somit ist davon auszugehen, dass die PV-induzierte Temperaturerhöhung eine beschleunigte Alterung der Kabelisolation zur Folge hat. Dabei verhält sich die Lebenserwartung τ (in Jahren) des Isolationsmaterials (PVC) nach folgender Funktion (ϑ ist die Temperatur in °C):

$$\tau = 29966 \cdot e^{-0,104 \cdot \vartheta}$$

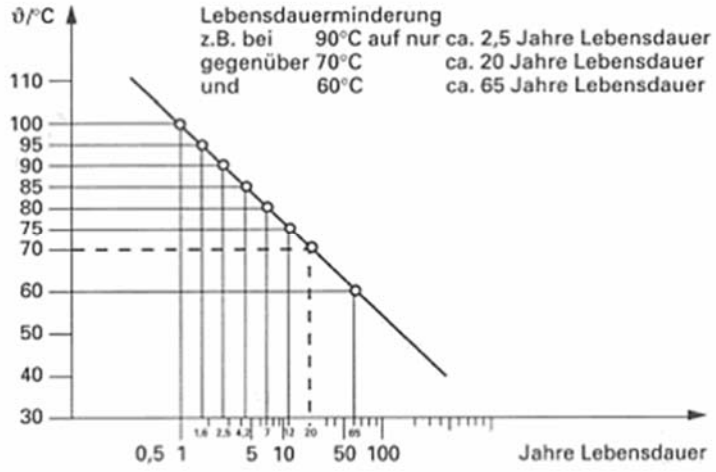

Abbildung 13: Lebensdauer des Isolationsmaterials (PVC) in Abhängigkeit der Temperatur ϑ (HEA Fachgemeinschaft für effiziente Energieanwendung e. V., kein Datum)

2.1.11.1 bei maximalem Strom

Nach dieser Funktion hat eine dauerhaft mit dem maximal zulässigen Strom belastete NYM-J 3x1.5 mm² Mantelleitung bei Referenzverlegeart A2 eine Lebenserwartung von 9 Jahren. Nun wurde ein 2,6 A Stecker-Solar-Gerät hinzugefügt und die Lebenserwartung für ein Jahr simuliert. Die Lebenserwartung sinkt dadurch um 1,4 Jahre auf 7,6 Jahre. Hierbei handelt es sich allerdings um eine rein theoretische Belastung, die erst ab einem Jahresstromverbrauch 31.442 kWh auftreten kann. [7]

2.1.11.2 bei Referenzlastprofil H0

In der Praxis werden Leitungen nicht voll ausgelastet. Im ungünstigsten Fall ist eine Belastung mit einer Phase des Referenzlastprofils H0 möglich. Dabei kommt es durch ein Stecker-Solar-Gerät nicht zu einer Erhöhung der Temperatur. Ganz im Gegenteil: Bei ca. 13 % der Leitungen im Stromkreis reduziert sich sogar der Strom um den PV-Strom. Die Alterung der betroffenen Leitungen wurde mit einem 2,6 A Stecker-Solar-Gerät simuliert. In der Praxis steigt damit die Lebenserwartung eines Teils der Elektroinstallation theoretisch von 2.158 Jahren um 3 Jahre auf 2.161 Jahre.

[7] Anschaulich beschrieben entspricht dieser Fall folgendem Handeln einer Person: Eine Person stimmt die Anzahl und Leistung der Geräte genauso ab, dass Sie im Betrieb dem Maximum entsprechen, was in einem Stromkreis fließen kann, bis zu der Schwelle an der die Sicherung auslöst. Sobald dann die erste Solarstromerzeugung auftritt, steht mehr Leistung zur Verfügung und diese wird dann umgehend durch das Hochregeln bestimmter Geräte ebenfalls komplett verbraucht.

2.1.12 Normative Einordnung

Bei der Auslegung von elektrischen Installationen werden temporäre/potentielle Überlastsituationen in folgenden Fällen berücksichtigt:

1. MCB haben ein Auslöseverhalten nach Abbildung 5. Diese Geräte dürfen beim kleinen Prüfstrom von 1,13*Nennstrom nicht, müssen aber beim großen Prüfstrom von 1,45*Nennstrom nach spätestens 60 min auslösen. Daher kann es vorkommen, dass der große Prüfstrom für 60 min anliegt. Die Norm DIN VDE 0100-430 für Leitungsschutzschalter erlaubt, dass die Grenzwerte der VDE 0298-4 für eine Stunde um das 1,45-fache überschritten werden dürfen. Zum Vergleich: ein 2,6 A Stecker-Solar-Gerät würde den Grenzwert nur um das 1,16-fache überschreiten.
2. Laut DIN VDE 0100-100 dürfen bei der Planung einer elektrischen Anlage Gleichzeitigkeitsfaktoren berücksichtigt werden. Dies berücksichtigt die Tatsache, dass nie alle Geräte einer Elektroanlage gleichzeitig mit voller Leistung betrieben werden.
3. Gleichzeitigkeitsfaktoren bei Leitungshäufung berücksichtigen zudem die Tatsache, dass nie alle Leitungen einer Elektroanlage gleichzeitig mit maximalem Strom betrieben werden.

Die Forderungen nach DIN VDE 0100-430 haben das Ziel, den Betrieb innerhalb der Grenzbelastungskennlinie für PVC-isolierte Leitungen sicherzustellen. Wie zu erkennen ist, erfolgt auch der Betrieb eines 2,6 A Stecker-Solar-Gerätes mit max. 6,5 Tagesvollaststunden innerhalb dieser Kennlinie.

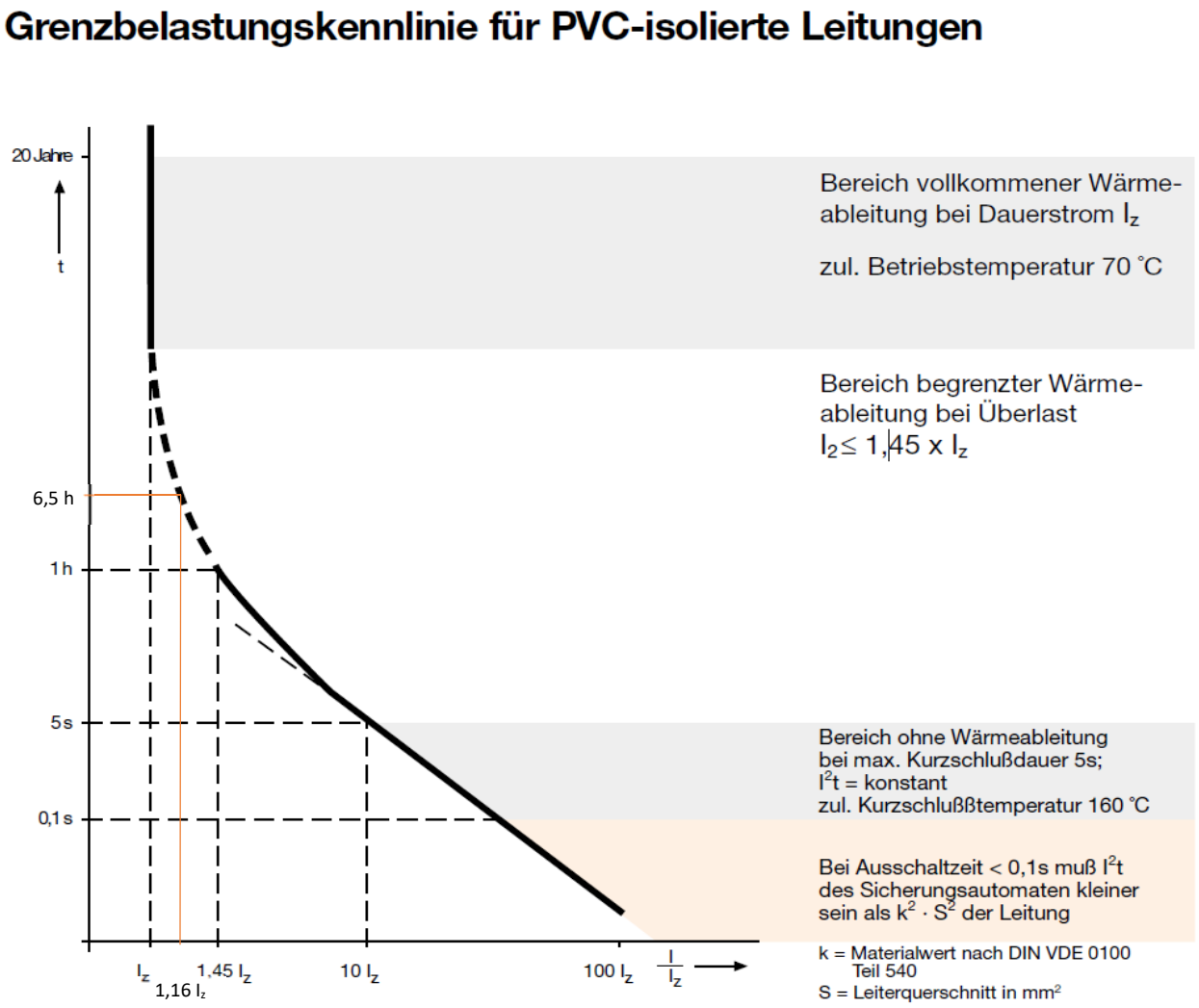

Dabei liegen auch die auftretenden Temperaturen innerhalb der Normvorgabe: Die DIN VDE 0100-430 erlaubt dauerhaft 70 °C und für 5 Sekunden 160 °C.

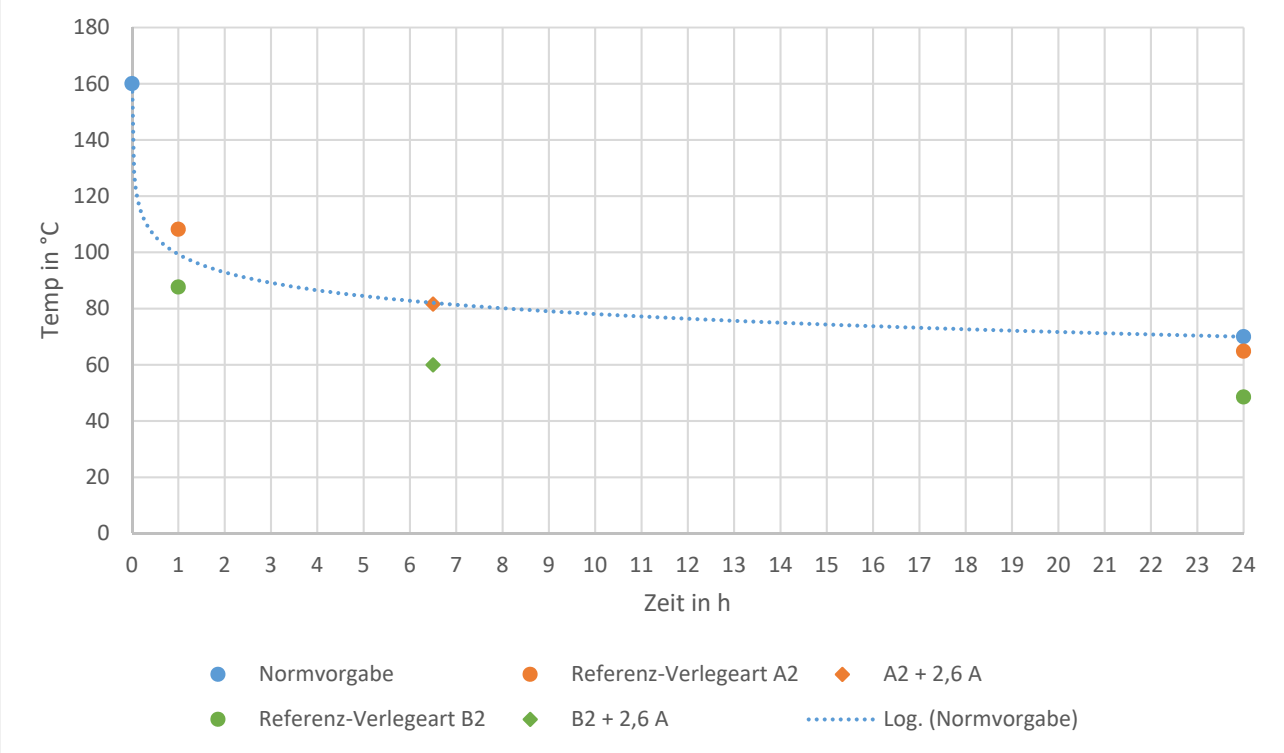

Abbildung 14: Zulässige Temperaturen als Funktion der Zeit

Es zeigt sich, dass die temporäre mögliche Erhöhung der Maximaltemperaturen durch ein 2,6 A Stecker-Solar-Gerät innerhalb der Grenzbelastungsvorgaben der Norm liegt, während ohne Stecker-Solar-Gerät die Grenzen bei Verlegeart A2 überschritten werden.

2.2 Belastung der Kontaktstellen

Verbindungsdosenklemmen sind für einen Bemessungsstrom von 24 A ausgelegt. Daher können mit einem 2,6 A Stecker-Solar-Gerät theoretisch keine Überlastungssituationen hergestellt werden. Dennoch kommt es durch fehlerhafte Installationen und gealterte Kontaktstellen immer wieder zu Bränden. Anders als bei der Untersuchung der Leitertemperaturen ist der Querschnitt der Kontaktflächen nicht bekannt. Daher wird die statistische Brandwahrscheinlichkeit im Folgenden als Funktion des Stromes untersucht.

2.2.1 Brände und Brandtote in Deutschland

In Deutschland kam es in den Jahren 2002 bis 2006 im Mittel zu 184.485 Bränden (Institute für Schadenverhütung und Schadensforschung). Nach der IFS-Brandursachenstatistik 2016 sind 31% (57.190 Brände) auf Elektrizität zurückzuführen. Davon werden 28 % (16.013 Brände) durch fehlerhafte Elektroinstallationen verursacht (Drews, 2012).

Tabelle 6: jährliche Brände und Brandtote

		Brände	Brandtote
in Deutschland		184485	403
durch Elektrizität	31%	57190	125
durch fehlerhafte Elektroinstallationen	9%	16013	35

2.2.2 Brandwahrscheinlichkeit

Im Jahr 2015 gab es in Deutschland 45,7 Mio. Netzanschlüsse (Statista, kein Datum). Nach Kapitel 2.1.7 ergeben sich 124 Kontaktstellen pro Netzanschluss. Es sind also mindestens 5,9 Milliarden Kontaktstellen in deutschen Hausinstallationen vorhanden. Falls alle Brände fehlerhaften Kontaktstellen zuzuordnen sind, ergeben sich folgende Wahrscheinlichkeiten, dass eine Kontaktstelle innerhalb eines Jahres einen Brand auslöst:

Tabelle 7: Brandwahrscheinlichkeit von Elektroinstallationen in Deutschland

		Brandwahrscheinlichkeit	Wahrscheinlichkeit von Brandtoten
Netzanschlüsse	47.700.000	$3{,}357 * 10^{-4}$	$7{,}075 * 10^{-7}$
Kontaktstellen	5.914.800.000	$2{,}71 * 10^{-6}$	$5{,}71 * 10^{-9}$

Anders ausgedrückt: Nach durchschnittlich 2.979 Jahren brennt es an jedem deutschen Netzanschluss.

2.2.3 Betroffene Kontaktstellen

Wenn optimistischerweise 5 Mio. Stecker-Solar-Geräte (Quaschning, 2014) in Deutschland in einem von drei Stromkreisen installiert sein werden, hat das Auswirkungen auf 150 Mio. Kontaktstellen (2,5 %). Dabei käme es in 60 Mio. (1,0 %) der Kontaktstellen (rot markiert) zu einer Anhebung des max. Leiterstroms. Bei mindestens 80 Mio. - also 1,4 % der Kontaktstellen (grün markiert) - käme es dagegen bei unverändertem Nutzungsverhalten zu einer verringerten Spitzenstrombelastung.

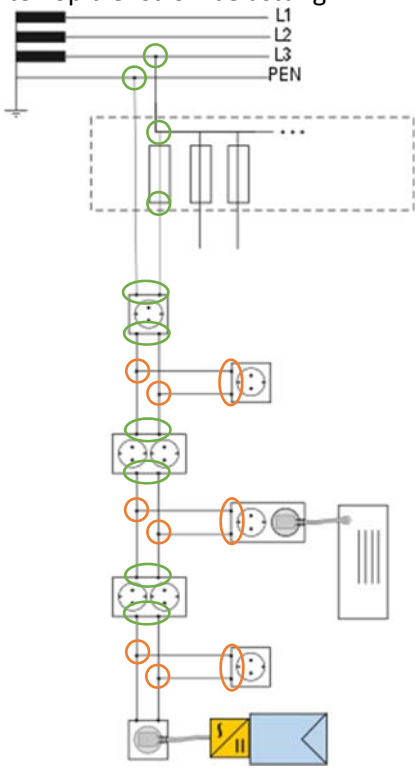

Abbildung 15 Schematischer Aufbau eines im Hausnetz eingebundenen Stecker-Solar-Gerätes

Die Wahrscheinlichkeit eines Brandes an einer Kontaktstelle ist eine Funktion der Temperatur. Die Temperatur einer Kontaktstelle ist eine Funktion des Stromes.

2.2.4 Brandwahrscheinlichkeit bei maximalem Leiterstrom (I_n·1,13)

Im ungünstigsten Fall ist die Leitung mit 10 A abgesichert. Demnach verhält sich die Wahrscheinlichkeit eines Brandes in Abhängigkeit vom maximalen Leiterstrom an einer Kontaktstelle nach:

$$\zeta_{brand.max} = 2{,}1202 \cdot e^{-8} \cdot I^2$$

Auf dieser Grundlage wurde die Brandwahrscheinlichkeit mit einem 2,6 A Stecker-Solar-Gerät ausgerechnet: Danach würde die Brandwahrscheinlichkeit pro Hausanschluss durch stärker belastbare Kontaktstellen bei 2,6 A Einspeisung um $1{,}99 \cdot 10^{-6}$ auf $3.376 \cdot 10^{-4}$ steigen.

Verständlich ausgedrückt:

- Nach durchschnittlich 2.975 Jahren (vier Jahre früher) brennt es an jedem deutschen Netzanschluss mit 2,6 A Stecker-Solar-Gerät.
- Bei diesem Ansatz steigt die Brandwahrscheinlichkeit in deutschen Elektroinstallationen um 0,062%

2.2.5 Brandwahrscheinlichkeit bei Referenzlastprofil H0

In der Praxis ist die Brandwahrscheinlichkeit nicht an den maximal zulässigen Bemessungsstrom I_n gekoppelt, sondern an den momentanen Strom eines Stromkreises. Diese Brandwahrscheinlichkeit für den untersuchten Lastgangsatz verhält sich nach:

$$\zeta_{brand.real} = 5{,}2669 \cdot e^{-7} \cdot I^2$$

Danach würde die Brandwahrscheinlichkeit pro Hausanschluss an den grün markierten Kontaktstellen, durch 2,6 A Einspeisung, um $7{,}342 \cdot 10^{-9}$ auf $3{,}357 \cdot 10^{-4}$ steigen.

Anders ausgedrückt:

- In Deutschland kommt es jährlich zu 0,08 zusätzlichen Bränden pro Jahr.
- Bei diesem Ansatz steigt die Brandwahrscheinlichkeit in deutschen Elektroinstallationen um 0,00023% (die Brandwahrscheinlichkeit ändert sich also praktisch nicht)

2.3 Vergleich mit anderen Kraftwerken

In Deutschland kam es in den Jahren 2010 bis 2014 im Mittel zu 403 Brandtoten (Deutscher Feuerwehrverband e. V. (DFV), kein Datum). Demnach sind 34 Brandtote auf Brände der Elektroinstallation zurückzuführen.[8] Bei 5 Mio. Stecker-Solar-Geräten in Deutschland würden zwischen 0,000077 und 0,020981 (im Mittel 0,010529) Brandtote pro Jahr hinzukommen. (ein Todesfall in 95 Jahren)

Konservativ betrachtet könnten 5 Mio. Stecker-Solar-Geräte mit 500 W_p 1,55 TWh/a produzieren.

Im Jahr 2015 produzierten die deutschen Kohlekraftwerke 260 TWh. Dabei verursachten sie durch die damit verbundene Umweltverschmutzung 3.100 Todesopfer (Philipp Preiss, 2013).[9] Würden 1,55 TWh/a Kohlestrom durch Stecker-Solar-Geräte substituiert, würde das jährlich 18,5 Menschen das Leben retten. (1.756 Todesfälle in 95 Jahren)

Stecker-Solar-Geräte sind damit 1755-mal sicherer als Kohlekraftwerke.

[8] Wobei diese Mehrheitlich durch Rauchgase im Schlaf zurückzuführen sind (Deutscher Feuerwehrverband e. V. (DFV), kein Datum) Da sich die PV-Erzeugung mehrheitlich nicht mit Schlafphasen deckt, ist mit keiner Beeinflussung zu rechnen.

[9] jährlich 11,9 Todesopfer/TWh

2.4 Auswertung

Bei einer Strombegrenzung auf 2,6 A:

- Besteht keine Brandgefahr durch die thermische Überlastung von Leitungen
- Nimmt die Lebensdauer der Isolierung in der Praxis zu
- Tritt keine signifikante Steigerung der Brandwahrscheinlichkeit in Deutschland auf
- Könnten jährlich 18 Todesopfer durch Kohleverstromung vermieden werden

2.5 Handlungsempfehlung

Wie in den Niederlanden mit 500 W und 2,25 A, in Österreich mit 600 VA und in der Schweiz mit 600 W und 2,6 A erprobt, kann mit einer Begrenzung des max. AC-Stroms z.B. auf 2,6 A eine Überlastung von Leitungen ausgeschlossen werden.

Da das Brandrisiko vor allem bei älteren Installationen auftritt, sollte bei Installationen mit Schraubsicherungen der Einbau einer kleineren Sicherung verlangt werden. (z. B. eine Reduzierung von 16 A auf 13 A) .

3 Anhang

3.1 Test und Messgeräte

Die Messungen wurden in den Laboren der HTW-Berlin durchgeführt. Die Messungen für Kapitel 1 wurden im Labor für Solare Energiewandlung am Steady-State-Sonnensimulator Klasse B und die Messungen für Kapitel 2 wurden im Labor für Elektrische Antriebstechnik und Leistungselektronik am Xantrex XKW 55-55 durchgeführt.

Es wurden zwei Wechselrichter mit galvanischer Trennung (AE-Conversion 250 und Letrika 260) und ein Wechselrichter ohne galvanische Trennung (StecaGrid 300) untersucht. Diese wurden passend zu ihren Spezifikationen mit folgenden Photovoltaik-Modulen verschaltet: aleo S_19 mit 245 W (I_{mpp} 8,48 A, U_{mpp} 31,3 V); Ningbo Dragon JGM-220M mit 220 W (I_{mpp} 4,64 A, U_{mpp} 47,5 V); EMMVEE ES 215 P 60 mit 215 W (I_{mpp} 7,39 A, U_{mpp} 28,96 V)

Als RCD wurde ein Hager CDA 225D eingesetzt. Zur Strom- und Spannungsmessung wurden mehrere METRAHIT ONE Plus Multimeter eingesetzt. Es wurde ein Ahlborn AMR ALMEMO 2590-4S Datenlogger mit PCT und TC Sensoren eingesetzt.

3.2 Simulationsparameter

Das System wurde mit Matlab unter Verwendung der PV_LIB Toolbox modelliert und simuliert. Die PV_LIB Tool-box wurde von Sandia National Laboratories herausgegeben und vom Fraunhofer ISE teilweise mitentwickelt.

Das PV-Wechselrichter-System wurde mithilfe der PV_LIB Toolbox simuliert. Die Leistungsberechnung der PV-Module fand mit dem Eindiodenmodell statt. Die Umrechnung der Globalstrahlung in Direkt- und Diffusstrahlung auf eine geneigte Ebene wurde mithilfe des Modells von David King durchgeführt.

Grundlage für die Simulation der Energieerzeugung sind die Wetterdaten für Oldenburg, bestehend aus der Globalbestrahlungsstärke und der Umgebungstemperatur. Die Simulation basiert auf 74 Lastprofilen für Wohngebäude in Deutschland auf 1-sekündiger Datenbasis, die in Summe dem Referenzlastprofil H0 entsprechen (Tjaden, Bergner, Weniger, & Quaschning, 2015). Die Simulation wurde minutengenau mit 3 Phasen (222 Lastgängen) durchgeführt.

Der Aufbau des Systems besteht aus zwei in Reihe geschalteten PV-Modulen und einem Modul-Wechselrichter mit den in Tabelle 8 aufgeführten Parametern. Der maximale AC-Strom wurde auf 2,6 A skaliert. Folgende Systemkomponenten wurden verwendet:

Tabelle 8 Übersicht der Parameter der verwendeten PV-Module und des Wechselrichters

	PV-Module	Wechselrichter
Hersteller	aleo solar GmbH	AE-Conversion GmbH & Co KG
Bezeichnung	Aleo S19H250	INV500-90
Technologie	Monokristallines Si	-
Anzahl	2	1
Verschaltung	seriell	-
Anzahl Zellen	60	-
I_MPP in A	8,02	-
I_DCmax in A	8,46	11
U_MPP in V	31,19	-
U_DCmax in V	38,02 (2 Module: 76,04 V)	90
U_ACnenn in V	-	240
P_DC in W	250 (2 Module: 500 W)	509,72
P_AC in W	-	480,5
MPP-Trackingbereich in V	-	40,0…80,0

Folgende Annahmen wurden getroffen.

- Die Raumtemperatur beträgt 25°C.
- Die Windgeschwindigkeit beträgt 0 m/s.

3.3 Code

```
clear all; %clear memory before running script
close all; %close all files and figures
%% Parameter-Festlegung
%%
%Definition Azimutwinkel: Westen 90 bis Osten - 90
%Definition Azimutwinkel PVLib Intern: Westen 90 bis Osten 270

% FÃ¼r Testlauf
Array.Azimuth=180;
Array.Tilt=35;

% %Variation von Azimut und Neigung 7x9 Matrix
% Array.Azimuth=(90:22.5:270);
% Array.Tilt= (90:-10:0);
```

```
dT = 60; %dT = 1 sekÃ¼ndliche Berechnung
 %dT = 60 minÃ¼tliche Berechnung
%% System Definition
%%
%Pfad einfÃ¼gen notwendig um PVLib zu nutzen

load('CECModuleDatabaseSAM2015.6.30.mat')
% Aleo S19H250 => #431
% 250 Watt Modul, 60 Zellen
Module = CECModuleDB(428);
clear CECModuleDB ModuleNames

load('CECInverterDatabaseSAM2015.6.30.mat')
% Wechselrichter AEconversion Gmbh: INV500-90US-xxxxx (240V) 240V [CEC 2014]
Inverter = CECInverterDB(176);
clear CECInverterDB InverterNames

f_scale = 2.6/2.1;

%Modulverschaltung
Array.Ms = 2; %Anzahl der Module in Reihe
Array.Mp = 1; %Anzahl parallel verschalteter Module

%interne Modulparameter
Array.a = -3.56;
Array.b = -0.075;
%% Wetterdaten, Zeit, Standort
%%
%Wetterdaten in minütlicher Auflösung
load('input_min.mat');

Time = pvl_maketimestruct(time_datenum, 1); % 1 = Zeitzone UTC+1
time = time_datetime;
DNI = G_dn;
DHI = G_dh;
GHI = G_gh;
clear time_datetime time_datenum G_dh G_dn G_gh

%Luftdruck in Pa
PresPa=101325;
%Windgeschwindigkeit in m/s
w_spd=0;

Location = pvl_makelocationstruct(Koordinaten(1),Koordinaten(2),altitude);
%% Berechnung Bestrahlung
%%
[SunAz, SunEl, AppSunEl, SolarTime] = pvl_ephemeris(Time,Location,PresPa,T_amb);
AMa = pvl_absoluteairmass(pvl_relativeairmass(90-AppSunEl),PresPa);
AOI = pvl_getaoi(Array.Tilt,Array.Azimuth, 90-AppSunEl, SunAz);
```

```
Eb = 0*AOI;
Eb(AOI<90) = DNI(AOI<90).*cosd(AOI(AOI<90)); %Only calculate when sun is in view of the plane of array

EdiffSky = pvl_kingdiffuse(Array.Tilt,DHI, GHI, 90-AppSunEl);

Albedo = 0.2;
EdiffGround = pvl_grounddiffuse(Array.Tilt,GHI, Albedo);
% Globale Bestrahlungsstärke in W/m^2
E = Eb + EdiffSky + EdiffGround; %Total incident irradiance (W/m^2)
%diffuse Bestrahlungsstärke in W/m^2
Ediff = EdiffSky + EdiffGround; %Total diffuse incident irradiance (W/m^2)
clear EdiffGround Ediff EdiffSky Eb AOI AMa altitude Albedo DHI DNI SunEl SolarTime Sun Az PresPa
AppSunEl
%% Berechnung des PV-Modul Arrays
%%
deltaT=3;

%STC
E0 = 1000; %Reference irradiance (1000 W/m^2)
celltemp = pvl_sapmcelltemp(E, E0, Array.a, Array.b, w_spd, T_amb, deltaT);

[IL, I0, Rs, Rsh, a] = pvl_calcparams_CEC(E, celltemp, Module);
[IVResult] = pvl_singlediode(IL, I0, Rs, Rsh, a); %11 Sekunden
%% Wechselrichter Ausgangsleistung
% Umrechnung DC zu AC
%%
P_WR_AC = pvl_snlinverter(Inverter, IVResult.Vmp*Array.Ms, IVResult.Pmp*Array.Ms*Array.Mp) .*
f_scale;
I_WR_AC = P_WR_AC ./ 230;
clear deltaT E0 f_scale i j IL In Rs Rsh SunAz T_amb t_stat t_vor time_datenum_MEZ w_spd

%% Simulation der Ströme

%%maximal Ströme
%Bemessungsstrom in Dämmung = 16 A
I_max=16 * 1.13;
I_max_PV = I_max + I_WR_AC;
I_max_PV_av = mean(I_max_PV);

%%real Ströme
%Lastprofile laden
load('ADRES_IZES_74_1min_W_var_v2.mat');
clear time_datennum_MEZ time_datevec_MEZ
IL1 = sqrt(double(PL1).^2 + double(QL1).^2)/230;
IL2 = sqrt(double(PL2).^2 + double(QL2).^2)/230;
IL3 = sqrt(double(PL3).^2 + double(QL3).^2)/230;
clear PL1 PL2 PL3 QL1 QL2 QL3

I_H0 = [IL1,IL2,IL3];
```

```
clear IL1 IL2 IL3
I_H0_PV = abs(I_H0 - I_WR_AC);

%% Darstellungen Strom
figure
plot(I_max_PV)
title('max Ströme')

% maximale Ströme
figure
h1=histogram(I_max_PV);
h1.EdgeAlpha=0;
h1.FaceColor='g';
f=gca;
f.XLim=[18,21];
xlabel('Strom in A');
ylabel('Anzahl des Auftretens in Minuten pro Jahr');

% reale Ströme
figure
h1=histogram(I_H0); hold on;
h2=histogram(I_H0_PV); hold off;
legend('ohne PV','mit 2,6 A PV')
h1.EdgeAlpha=0;
h2.EdgeAlpha=0;
h1.FaceColor='b';
h2.FaceColor='g';
f=gca;
f.XLim=[0,35];
f.YLim=[10,3000000];
f.YScale = 'log';
xlabel('Strom in A');
ylabel('Anzahl des Auftretens in Minuten pro Jahr');

%% Simulation der Temperatur

%Raumtemperatur
T_raum=25;
T_vor=T_raum;

%Temperaturverlauf in Abhängigkeit des Leiterstromes
%gemessene Fitfunktion T = 0,0615 * I.^2,3347
tau=1804/60; %beachte Minutenwert
a= 0.0615; % Koeffizient a Fitfunktion
b= 2.3347; % Koeffizient b Fitfunktion


%%maximal Temperaturen
T_max = T_raum + a .* I_max^b;
```

```
T_max_PV(:,1) = zeros(size(I_max_PV));
for i = 2:length(I_max_PV)
 T_stat = T_raum + a .* I_max_PV(i).^b;
 T_max_PV(i)= T_vor + (T_stat - T_vor) * (1 - exp(-1/tau));
 T_vor=T_max_PV(i);
end
T_max_PV(1,:) = T_stat;
T_max_PV_av = mean(T_max_PV);

%%real Temperaturen
T_H0 = zeros(size(I_H0));
for j = 1:size(I_H0,2)
for i = 2:length(I_H0)
 T_stat = T_raum + a .* I_H0(i,j).^b;
 T_H0(i,j)= T_vor + (T_stat - T_vor) * (1 - exp(-1/tau));
 T_vor=T_H0(i,j);
end
T_H0(1,j) = T_stat;
end
T_H0_av = mean(T_H0);

T_H0_PV = zeros(size(I_H0_PV));
for j = 1:size(I_H0_PV,2)
for i = 2:length(I_H0_PV)
 T_stat = T_raum + a .* I_H0_PV(i,j).^b;
 T_H0_PV(i,j)= T_vor + (T_stat - T_vor) * (1 - exp(-1/tau));
 T_vor=T_H0_PV(i,j);
end
T_H0_PV(1,j) = T_stat;
end
T_H0_PV_av = mean(T_H0_PV);
T_H0_PV_max = max(T_H0_PV_av);

%% Darstellungen Temperaturen

figure
plot(T_max_PV)
title('max Temperaturen')

% maximale Temperaturen
figure
h1=histogram(T_max_PV);
h1.EdgeAlpha=0;
h1.FaceColor='g';
f=gca;
f.XLim=[77,97];
xlabel('Temperatur in °C');
ylabel('Anzahl des Auftretens in Minuten pro Jahr');

% reale Temperaturen
figure
```

```
h1=histogram(T_H0); hold on;
h2=histogram(T_H0_PV); hold off;
legend('ohne PV','mit 2,6 A PV')
h1.EdgeAlpha=0;
h2.EdgeAlpha=0;
h1.FaceColor='b';
h2.FaceColor='g';
f=gca;
f.XLim=[25,70];
f.YLim=[10,1.0E7];
f.YScale = 'log';
xlabel('Temperatur in °C');
ylabel('Anzahl des Auftretens in Minuten pro Jahr');

%% Simulation der Lebensdauer

%%maximal Lebensdauer
%Mittelwert aus der minütlichen Lebensdauer
L_max = 29966*exp(-0.104*T_max);
L_max_PV = mean(29966*exp(-0.104*T_max_PV));

%%real Lebensdauer
L_H0 = mean(mean(29966*exp(-0.104*T_H0)));
L_H0_PV = mean(mean(29966*exp(-0.104*T_H0_PV)));
L_H0_diff = L_H0_PV - L_H0;

%% Simulation der Brandwahrscheinlichkeit
Braende_DE = 184485;
Braende_EL = Braende_DE * 0.31;
Braende_Inst = Braende_EL * 0.28;

n_Anschluss = 47700000;
n_Kontakt_A = 124;
n_Kontakt = n_Anschluss * n_Kontakt_A;
I_brand_max = 10 * 1.13;

%% maximale Brandwahrscheinlichkeit am Leiter
W_brand_L = Braende_Inst / n_Kontakt;

NR_b_max = W_brand_L / I_brand_max.^2;

I_brand_max_PV = I_brand_max + I_WR_AC;
W_brand_L_max_PV = mean(NR_b_max * I_brand_max_PV.^2);

%%reale Brandwahrscheinlichkeit
NR_b_H0= 5.2669e-07;

T_H0 = zeros(size(I_H0));
for j = 1:size(I_H0,2)
for i = 2:length(I_H0)
```

```
 W_brand_L_H0 = NR_b_H0 * I_H0(i,j).^2;
end;
end;

T_H0_PV = zeros(size(I_H0_PV));
for j = 1:size(I_H0_PV,2)
for i = 2:length(I_H0_PV)
 W_brand_L_H0_PV = NR_b_H0 * I_H0_PV(i,j).^2;
end;
end;

%% Brandwahrscheinlichkeit am Hausanschluss

SZ = 1; %Sicherheitszuschlag
n_Kontakt_max = 12;
n_Kontakt_H0 =16;

p_Kontakt_max = n_Kontakt_max * SZ /n_Kontakt_A;
p_Kontakt_H0 = n_Kontakt_H0 * SZ /n_Kontakt_A;

W_brand_H = W_brand_L * n_Kontakt_A;
W_brand_H_max_PV = (W_brand_L * (1 - p_Kontakt_max) + W_brand_L_max_PV * p_Kontakt_max) *
n_Kontakt_A;
W_brand_H_H0_PV = (W_brand_L * (1 - p_Kontakt_H0) + W_brand_L_H0_PV * p_Kontakt_H0) *
n_Kontakt_A;
W_brand_H_max_PV_diff = W_brand_H_max_PV - W_brand_H;
W_brand_H_H0_PV_diff = W_brand_H_H0_PV - W_brand_H;


%% Brandwahrscheinlichkeit in Deutschland
n_PV_DE = 5000000;
p_PV_DE = n_PV_DE /n_Anschluss;

W_brand_DE = W_brand_H * n_Anschluss;
W_brand_DE_max_PV = (W_brand_H * (1 - p_PV_DE) + W_brand_H_max_PV * p_PV_DE) * n_Anschluss;
W_brand_DE_H0_PV = (W_brand_H * (1 - p_PV_DE) + W_brand_H_H0_PV * p_PV_DE) * n_Anschluss;
W_brand_DE_max_PV_diff = W_brand_DE_max_PV - W_brand_DE;
W_brand_DE_H0_PV_diff = W_brand_DE_H0_PV - W_brand_DE;
W_brand_DE_max_PV_prop = W_brand_DE_max_PV_diff / W_brand_DE;
W_brand_DE_H0_PV_prop = W_brand_DE_H0_PV_diff / W_brand_DE;
```

3.4 Literaturverzeichnis

Deutscher Feuerwehrverband e. V. (DFV). (kein Datum). Von http://www.feuerwehrverband.de/statistik.html abgerufen

Dr. Thomas Erge, D.-I. H. (2017). *STECKERFERTIGE, NETZGEKOPPELTE KLEINST-PV-ANLAGEN.* Freiburg: Fraunhofer-Institut für Solare Energiesysteme, ISE.

Drews. (2012).

HEA Fachgemeinschaft für effiziente Energieanwendung e. V. (kein Datum). *HEA Fachgemeinschaft für effiziente Energieanwendung e. V.* Von http://service.hea.de/fachwissen/elektroinstallation/2-3-schutz-von-kabeln-Leitungen-bei-ueberstrom.php abgerufen

Institute für Schadenverhütung und Schadensforschung. (kein Datum). *Brandursachen für Deutschland.*

Philipp Preiss, J. R. (2013). *Assessment of Health Impacts of Coal Fired Power Stations in Germany by Applying EcoSenseWeb.* Institut für Energiewirtschaft und rationelle Energieanwendung (IER) der Universität Stuttgart.

Quaschning, V. (2014). Von https://www.volker-quaschning.de/artikel/2014-06-Mehr-Guerilla/index.php abgerufen

Sandia National Laboratories. (kein Datum). *PVPerformance Modeling Collaborative*. Abgerufen am 8. Februar 2017 von https://pvpmc.sandia.gov/modeling-steps/1-weather-design-inputs/plane-of-array-poa-irradiance/calculating-poa-irradiance/poa-sky-diffuse/simple-sandia-sky-diffuse-model/

Statista. (kein Datum). Von https://de.statista.com/statistik/daten/studie/164153/umfrage/anzahl-der-kunden-von-stromanbietern-seit-1999/) abgerufen

Statistisches Bundesamt. (kein Datum). Von https://www.destatis.de/DE/Methoden/Zensus_/Tabellen/Wohnsituation_HH_Zensus11_Wohnfla eche.html abgerufen

Tjaden, T., Bergner, J., Weniger, J., & Quaschning, V. (2015). *Repräsentative elektrische Lastprofile für Einfamilienhäuser.* Berlin: Hochschule für Technik und Wirtschaft HTW.

3.5 Abbildungsverzeichnis

Abbildung 1: Messaufbau A2 worst case 9
Abbildung 2: Messaufbau A2 10
Abbildung 3: Stromkreis mit Stecker-Solar-Gerät 14
Abbildung 4: ΔT = f (I) bei A2 Verlegung in wärmegedämmten Wänden 15
Abbildung 5: Auslösecharakteristik nach DIN EN 60898-1, VDE 0641-11 15
Abbildung 6: Strom (I_n·1,13) mit 2,6 A Stecker-Solar-Gerät 17
Abbildung 7: Häufigkeitsverteilung der maximalen Ströme 17
Abbildung 8: Ströme bei H0 mit und ohne 2,6 A Stecker-Solar-Gerät 18
Abbildung 9: max. Leitungstemperatur = f(Generatorstrom) über Umgebungstemperaturen 25-60 °C und Häufungen 1-8 20
Abbildung 10: maximale Leitertemperatur bei I_n·1,13 + I_{pv} 21
Abbildung 11: Häufigkeit der maximalen Temperaturen mit 2,6 A Stecker-Solar-Gerät 21
Abbildung 12: Temperaturen bei H0 mit und ohne 2,6 A Stecker-Solar-Gerät 22
Abbildung 13: Lebensdauer des Isolationsmaterials (PVC) in Abhängigkeit der Temperatur (HEA Fachgemeinschaft für effiziente Energieanwendung e. V., kein Datum) 23
Abbildung 14: Zulässige Temperaturen als Funktion der Zeit 25
Abbildung 15 Schematischer Aufbau eines im Hausnetz eingebundenen Stecker-Solar-Gerätes 26

Phase I - Final Technical Report

Gismo Power LLC

Report/Product Number: DOE-GISM-22708

Company: Gismo Power LLC. 3364 Tanglewood Drive Sarasota FL 34239

Principal Investigator: Achim Ginsberg-Klemmt - achim@gismopower.com.

Topic: C56-15. SOLAR ENERGY TECHNOLOGIES

Subtopic: f. Solar Hardware and Software Technologies: Affordability, Reliability, Performance, and Manufacturing

DOE Award Number: DE-SC0022708

Type of Phase II Submission: Initial Phase II

Date: 07/07/2023

Abstract/Summary

Today, Americans can choose between two photovoltaic deployment methods for their residential solar installations: Ground mounted structures, which require large spaces of single-use real estate, and rooftop solar, requiring costly, custom-engineered installations with onerous permitting procedures.

This project explores an affordable technology that fits neither the ground-mount nor rooftop category. GismoPower's Mobile Electricity Generating Appliance ("MEGA") is a carport on wheels that plugs directly into an electrical outlet, integrating a high-power bifacial solar PV system and Class 2 EV-Charger. It can be wheeled into garages and shelters during adverse weather conditions, freeing up garage space, and its portability circumvents setback regulations and HOA covenants. Instead of site-specific permitting, engineering, and customized construction of rooftop or ground mounted structures, this standardized domestic appliance will significantly reduce soft costs. As a "PV-EV Charger," this portable solar carport is ideally suited to making PV and EV ownership more accessible to lower and moderate income communities.

Phase I has focused on UL-certification preparation for the MEGA with Intertek's Initial Design Review, which revealed additional requirements that have influenced further design iterations. Improvements have addressed safety, portability, caster wheel design, usability of the collapsible wing mechanism, weatherproofing of the system and aesthetics. The technical feasibility study deployed the MEGA system with two different grid forming inverter systems with micro-grid capabilities in combination with small backup battery banks. The off-grid capabilities of the system has established the "FIONA", a spin-off system

incorporating a backup battery with deployment potential to prevent power outages in emergency situations.

With an eye to reaching an incremental beachhead market by enabling the established ground-mounted permitting procedures in North Carolina and California, GismoPower has contracted with EEDAS USA Inc. who has approved the structural engineering design for maximum sustained wind speeds up to 130 mph.

Phase II will focus on the establishment of a modification to UL-1741 or a new UL standard for Plug-In, domestic Solar Appliances, of which MEGA will be just the first instance.

Following the milestone of obtaining the UL-Listing as a portable, unmounted and grid-tied electricity generating household appliance will be the establishment of an automated nationwide interconnect agreement with the utilities, exclusively based on thorough grid impact analysis and sound scientific reasoning. This will open the PV and EV market to renters and people on the move, facilitating permitting procedures for other portable grid-tied electricity generating appliances in the future, resulting in a rapid increase of grid-tied and off-grid PV deployment to residential driveways while accelerating the availability of renewable energy for moderate income Americans.

Table of Contents

Abstract / Summary	1
Table of Contents	2
Introduction	2
Phase I Technical Objectives	3
Phase I Accomplishments	3
Conclusions	17
References	19

INTRODUCTION

Imagine a major household appliance that, instead of consuming electricity, generates and feeds renewable solar electricity to the electric vehicle, adjacent buildings and the utility grid, using a 240V plug and outlet. GismoPower®[1] is developing the MEGA®, a Mobile Electricity Generating Appliance, a portable carport on removable wheels integrating a high-power bifacial PV system, which generates electricity for adjacent buildings, EVs, and the connected grid. See **Figure 1**.

[1] https://gismopower.com

It turns out we were not the first to imagine Plug & Play PV. Over 10 years ago, back in 2012, the DOE earmarked 25Million USD to research and develop "Plug and Play PV" solutions through the DE-FOA-0000653 opportunity. The DOE articulated the technology they were looking for: Simple installation, automatic electrical and structural permitting, automated grid interconnection and of course low cost. FREEDM Systems Center, our research partner for the American Made Solar Prize and first paying customer, received one of those two grants back in 2012, but didn't yet have their hands on a MEGA.

Figure 1: GismoPower's mobile electricity generating carport appliance MEGA (US Patent No. 11515833).

GismoPower's photovoltaic deployment technology targets underserved "energy prosumers" in the lower-to-moderate income (LMI) market segments, including renters, small businesses, and modest family homes. The design goals of the MEGA fit neither in the rooftop nor the ground-mounted solar PV categories. Its value is in generating solar power using previously untapped surface areas such as residential and commercial driveways and parking areas. Mobile MEGA racks will enable LMI households and small businesses to generate renewable energy in previously unusable locations for a fraction of the cost of a comparable rooftop or ground-mounted solar system. The MEGA eliminates the delays, costs and paperwork associated with the building and utility permits required by fixed solar installations. According to our business plan, by 2033, GismoPower will install more than 360 MW of residential solar power in the U.S., enabling a significant number of LMI Americans to participate in the distributed renewable energy revolution.

GismoPower's ultimate goal is to market the MEGA as an electricity generating and money-making household appliance. At the end of the proposed DOE SBIR Phase II project, it will be offered as the first commercially available, portable, grid-tied, UL-listed, and permit-free electricity-generating household appliance. At its estimated $27,000 consumer price point for a dual rack, the MEGA will have a 25-30 year life span. The basic version of the system will not be equipped with batteries; instead surplus electricity will be exported to the public utility power grid. Alternative configurations can incorporate batteries to serve as a deployable backup generator during power outages or as dispatchable generating resources (DER) in a Virtual Power Plant (VPP) network. Planned cost reduction activities and economies of scale will allow GismoPower to lower the price of the MEGA to $20,000 by 2033, reaching an estimated 106,000 customers among LMI households, and generating accumulated revenue of $1.98 billion.

Phase I: Technical Objectives

The overall goal of the Phase I project was to conduct a feasibility study of the system for UL-certification with an eye to development of a product design ready for mass manufacturing.

Since the MEGA will ultimately be deployed as a household appliance with one nationwide UL-listing, stringent standards and requirements must be met in order for the product to be widely used by the general public. These requirements include issues with: Safety, mechanical integrity, corrosion resistance, vertical and horizontal loads, electrical shock protection, electrical grounding and last but not least human usability.

Objective 1:
Identify, address and implement requirements to pass UL-Certification

Objective 2:
Upgrade the GismoPower PV module from 460W to 550W

Objective 3:
Explore GismoPower as a portable off-grid power generator

Phase I: Accomplishments

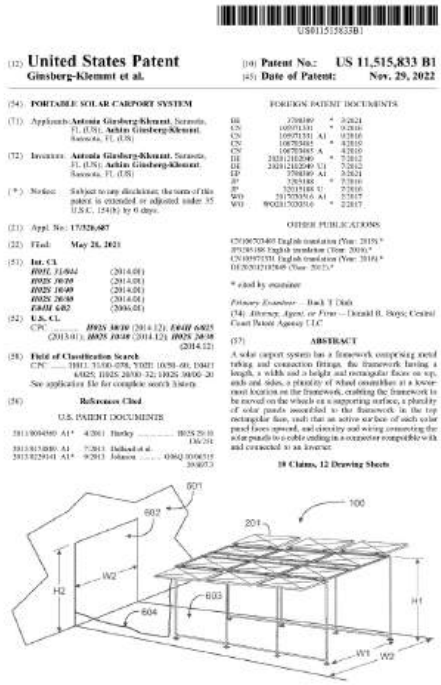
US011515833B1

(12) United States Patent
Ginsberg-Klemmt et al.

(10) Patent No.: US 11,515,833 B1
(45) Date of Patent: Nov. 29, 2022

(54) PORTABLE SOLAR CARPORT SYSTEM

(71) Applicants: Antonia Ginsberg-Klemmt, Sarasota, FL (US); Achim Ginsberg-Klemmt, Sarasota, FL (US)

(72) Inventors: Antonia Ginsberg-Klemmt, Sarasota, FL (US); Achim Ginsberg-Klemmt, Sarasota, FL (US)

(*) Notice: Subject to any disclaimer, the term of this patent is extended or adjusted under 35 U.S.C. 154(b) by 0 days.

(21) Appl. No.: 17/326,687

(22) Filed: May 21, 2021

(51) Int. Cl.
H01C 31/044 (2014.01)
H02S 20/00 (2014.01)
H02S 10/40 (2014.01)
H02S 20/40 (2014.01)
E04H 6/02 (2006.01)

(52) U.S. Cl.
CPC H02S 10/30 (2014.12); E04H 6/02 (2013.01); H02S 10/40 (2014.12); H02S 20/40 (2014.12)

(58) Field of Classification Search
CPC H01C 31/044; E04H 10/50-00; H04H 6/025; H02S 20/00-32; H02S 30/00-20
See application file for complete search history.

(56) References Cited

U.S. PATENT DOCUMENTS

FOREIGN PATENT DOCUMENTS

OTHER PUBLICATIONS

* cited by examiner

Primary Examiner — Buck T Dinh
(74) Attorney, Agent, or Firm — Donald R. Boyce Central Coast Patent Agency LLC

(57) ABSTRACT

A solar carport system has a framework comprising metal tubing and connection fittings, the framework having a length, a width and a height and rectangular faces on top, ends and sides, a plurality of wheel assemblies at a lower-most location on the framework, enabling the framework to be moved on the wheels on a supporting surface, a plurality of solar panels assembled to the framework in the top rectangular face, such that an active surface of each solar panel faces upward, and electric and wiring connecting the solar panels to a cable ending in a connector compatible with and connected to an inverter.

10 Claims, 12 Drawing Sheets

During the SBIR Phase I performance period, the US Patent Office issued patent *US11515833B1 "Portable Solar Carport System"* and published the associated patent extension *US20230053934A1 "Mobile Electricity Generating Carport Appliance"*.

A patent extension for the "Low cost Solar Powered Nanogrid" was also filed timely to assure protection of the associated IP.

As part of the discovery process, GismoPower obtained guidance letters for this novel PV deployment technology from the California Energy Commission (CEC) and the California Building Standards Commission (CBSC). (See embedded links)

Accomplishments towards Objective 1:
Identify, address and implement requirements to pass UL-Certification

Based on the information outlined in Intertek's May 2022 Preliminary Design Review (PDR), numerous design modifications were implemented to mitigate the identified design issues moving forward with the certification process as initially suggested by Intertek. The report identified one particular issue:

5/25/2022: ***"Bonding Path Drawing – The Bonding Path Drawing you provided needs to be revised to reflect the actual path of travel in a fault condition. You can use the following Mega Circuit Diagram to show all grounding and bonding paths provided to the Equipment Grounding Conductor for both the overall Mega system, optimizer, and inverter that will be employed with the Mega system. Please refer to the following drawing, which illustrates the Mega Circuit Diagram."***

During the Phase I performance period, the GismoPower team pursued the scheduled UL certification with tenacity. Staff changes at Intertek in October 2022 and other unknown factors at Intertek must have affected their initial commitment to move forward with the certification process as planned. A personal meeting at the Intertek Lab in Lake Forest in November 2022 resulted in a renewed promise by Intertek to deliver a detailed certification test plan in accordance with the LOC.

The certification test plan was never delivered. Instead GismoPower receive the following meeting protocol on March 7th 2023:

2/22/2023: "I held a meeting with my Team to have a review. It was stated that the feed-to-the-grid option was a hot topic and was well known that there is a lot of funding to support a design of what you are developing. It was noted that the bonding path, between lines 2-3 for the NEMA plug was an item that would be non- compliance. This was stated in the Findings letter issued by Kenny and will need to be revised to reflect the path of travel in a fault condition. In most cases, a findings letter is to let the client know what is non-compliant and in turn what needs to be changed to meet compliance. During that meeting, it was clear that the design needed to change.

It appears that Intertek's certification requirements evolved from the need to revise a drawing to *"it was clear that the design needed to change"* between May 2022 and March 2023,

On March 9th, 2023, it was communicated for the first time that NEMA 6-50 or NEMA 14-50 household appliance connectors, commonly used to connect domestic appliances and power tools to the low-voltage power grid, must comply with the UL-6703 standard for solar connectors. This new requirement was accompanied by a quote for an additional Preliminary Design Review, which amounted to $6,825.

Inverters and connectors in the PV DC circuit can be exposed to significantly higher voltages and lower amperage on the PV side (e.g.~400VDC in SolarEdge based systems) compared to the lower AC voltages encountered on the split-phased power grid side (~240VAC).

It seems reasonable to the GismoPower team to apply the proven standards used for 240V/50A AC grid-tied, domestic appliances to adequately meet the safety requirements for higher currents encountered on the power grid side.

MC4 connectors might be UL-6703 compliant, but they would melt under the high amperages encountered on the electric grid side of the PV Inverters. From a safety perspective it appears to make sense to use PV connectors on the PV side and power-grid connectors on the power-grid-side.

The GismoPower team is open to learning, but at this point they cannot imagine a scientifically founded reason why a Class II EV-Charger combined with a PV-Inverter like the SolarEdge SE7600 would be exposed to different voltage conditions on the AC power grid side than, for example, a Siemens Class II EV-Charger without the PV system attached.

Pivoting from Intertek to Underwriters Laboratory (UL)

On April 10th, 2023, Intertek presented their perspective on the obstacles impeding the MEGA from acquiring an ETL-Mark under the existing standards:

1) ***"[..] there are some inherently unsafe situations that could be created by the use of a PV system attaching to a NEMA receptacle via a plug that would have live prongs exposed if unplugged and the potential to backfeed the electrical grid in a power out situation since there is no automatic transfer with anti islanding protection relay to protect the grid."***

It became clear at this relatively late stage of our Phase I goals that Intertek was not able to see beyond their status quo. Intertek's widely accepted argument is often utilized by critics of Distributed Energy Resources (DER) as a tool to disparage and dismiss the practice of "backfeeding" as a hazardous and undesirable operation that should be circumvented. On the contrary, GismoPower argues that backfeeding, under ordinary conditions, is not only desirable but also a significant contributor to the reduction of greenhouse gas emissions.

GismoPower refrained from continuing with Intertek for the SBIR Phase I Interim report. Intertek refunded $11,700 of $12,000 fees to GismoPower for not conducting the work they had agreed to. Following Intertek's comments, GismoPower proceeded with a thorough investigation and continued pursuing their described objectives.

The team at GismoPower subsequently conducted a meticulous analysis of the voltage drop associated with the condition of "*live prongs exposed if unplugged.*" They utilized a Hantek 6022BE Digital Storage Oscilloscope to quantify the voltage drop of several typical UL-Listed household appliances in conjunction with popular solar inverter systems.

The appliances and equipment used for the measurements were carefully chosen to include a broad spectrum. These included a halogen workshop lamp, a UL-Listed electric drill produced by Central Machinery, a grid-tied SolarEdge SE7600 Class II EV-Charger integrated with a PV inverter (without backup batteries), and a Sol-Ark 8K Hybrid Inverter outfitted with a 5.12kWh LiFePO4 backup battery.

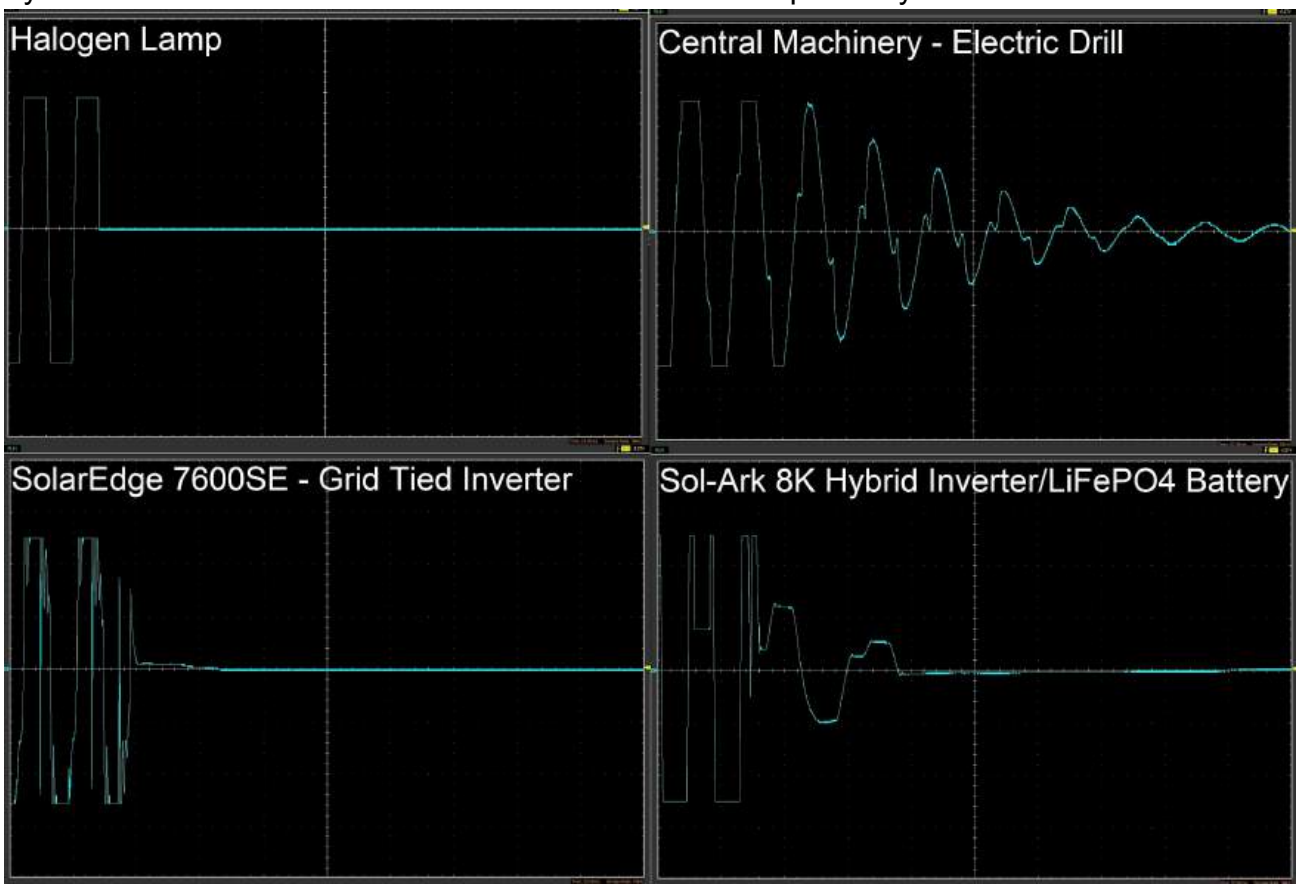

Figure 2: Plug voltage drop at prongs after unplugging from receptacle

Interestingly, the voltage drop seen after unplugging the halogen lamp was nearly instantaneous, which was within our expectations. **However, the voltage drop for the unplugged electric drill appeared not to adhere to the stringent requirements currently applicable to solar inverter systems. Fortuitously, the standards for "backfeeding" are more forgiving for electric drill manufacturers.**

The SolarEdge SE7600 Class II EV-Charger, integrated with a PV inverter, is not engineered to sustain the power supply to the household grid during power

interruptions. Consequently, the unit ceases operation and remains inactive throughout power outages. As anticipated, and in accordance with UL-1741 and IEEE 1547 standards, the prongs at the plug maintain minimal voltage levels.

In contrast, the Sol-Ark 8K Hybrid Inverter is explicitly designed to supply electricity to a domestic circuit during power outages. Counter to Intertek's claim, this model features a disconnect switch that safeguards against backfeeding to the utility grid when grid power is unavailable. This inverter model also demonstrated a reduction in voltage at the unplugged prongs, as expected, aligning with UL-1741 and IEEE 1547 regulations.

The team also connected the Central Machinery drill to the Sol-Ark 8k inverter as an additional load, with the grid power disconnected from the inverter. Even as the voltage at the supply cord prongs diminished almost instantaneously to nearly 0V, the drill continued to function without disruption. This created a detached "Nanogrid", reminiscent of an Uninterruptible Power Supply (UPS) typically found in computer systems.

The described measurements were conducted from May 26th to May 28th, 2023, at the GismoPower research facility located in Sarasota, Florida.

2) ***"NFPA 70, the National Electrical Code (NEC), does not address non-permanent wiring systems for PV module source circuits for inverters."***

Class II EV-Chargers, such as the Siemens Versicharge, are UL-Listed and feature flexible cords that establish a connection between the device, the vehicle, and the grid via a NEMA 6-50 plug-in. Regrettably, the National Electric Code appears to provide no guidance on non-permanent wiring for Class II EV-Chargers integrated with PV inverters, such as the SolarEdge SE7600.

It seems that we now inhabit a world where any technological solution not explicitly permitted is deemed strictly prohibited.

Figure 3: UL-Listing for Siemens CLASS II EV-Charger with NEMA 6-50 Plug-In connector

Unless there is a substantiated technical or scientific rationale that necessitates the inhibition of solar inverters operating with non-permanent wiring, such an operating condition should at least be tolerated if not explicitly permitted. This is due to the fact that it poses no greater risk than a typical Class II EV charger cable.

3) ***"According to the NEC, A dedicated branch-circuit or fusible disconnect is required for all inverters (see Articles 690 and 705), which requires a licensed electrician."***

   GismoPower's MEGA pilot sites boast dedicated branch circuits, installed by licensed electricians in line with building codes and NEC stipulations, encompassing the installation of code-compliant 240V receptacles. At the North Carolina pilot site, a licensed electrician even plugged the MEGA plug into the code-compliant outdoor receptacle, as demonstrated in the video shown on www.gismopower.com

   However, GismoPower posits that plugging electricity-generating household appliances into code-compliant outlets should not necessitate a licensed electrician. This well-established grid interconnection method is currently employed for major household appliances such as electric ranges, electric clothes dryers and for Class II EV-Chargers without integrated PV-Inverters.

4) ***"UL 1741, the safety standard for Inverters, Converters, Controllers and Interconnection System Equipment for Use With Distributed Energy Resources, requires permanent wiring from inverters entering a structure and has no provisions for flexible cord and plug connections of inverter output to a dwelling's distribution panel."***

   Absolutely. MEGA pilot sites are equipped with code-compliant, permanently installed, dedicated circuits that include weather-resistant receptacles located externally to adjacent structures. As such, there's no requirement for flexible cords from the inverter to penetrate the structure to access 240V receptacles installed indoors. This setup streamlines the process, providing a safe and efficient method for managing electricity-generating household appliances.

Just in time before the due date for this Phase I Final Technical Report, the Underwriters Laboratory Engineering team provided GismoPower with their preliminary letter report as part of the N&I New and Innovative program. UL's engineering team outlined in detail the path forward for the MEGA solar appliance to obtain UL-Certification. GismoPower has shared a copy of the preliminary report with their SBIR grant management team.

Accomplishments towards Objective 2:
Upgrade the GismoPower PV module from 460W to 550W

The first pilot sites at FREEDM Systems Center in Raleigh, NC and the one in Sarasota, FL next door to GismoPower's lab were equipped with 460W Jinko solar modules. GismoPower accomplished the goal to increase the maximum generating power per rack in a four step process. First, the two California pilot sites at Livermore and Walnut Creek were upgraded to 490W CSI BiHiKu5 panels.

Then, after the analysis of the mechanical requirements imposed by the UL-2703 standard and the 130 mph wind code rating, the structural engineering plans of the rack were upgraded to withstand the load of nine 540W CSI BiHiKu6 bi-facial modules per rack, enabling the MEGA to reach a maximum wattage per rack of 4.86KW without taking the bi-facial gain into consideration.

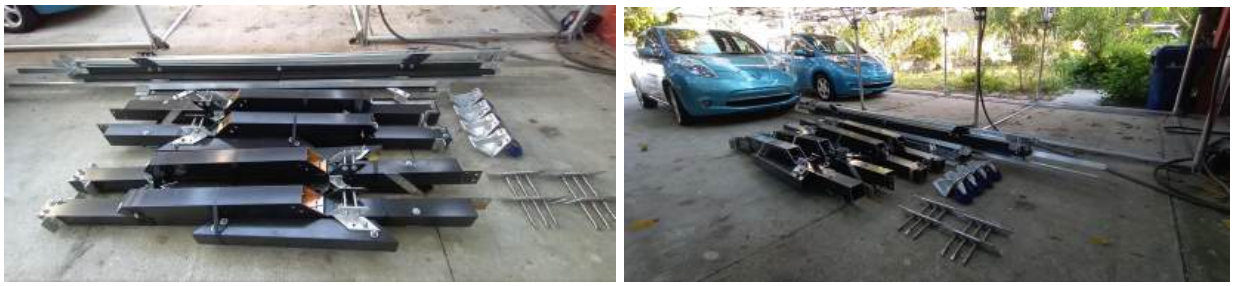

Figure 4: A bare flat packed single MEGA rack without PV modules weighs ~400 lbs

GismoPower reached out to Canadian Solar and Greentech Renewables in San Diego to secure a palette of 24 units of the 540W CSI BiHiKu6 Canadian Solar panels and related UL-1741 certified electronics. Greentech Renewables committed to supporting a substantial increase in demand for the BiHuKu6 modules around September 2023, to enable the establishment of larger or multiple pilot sites and deployment of early sales by GismoPower.

After receiving approval of the upgraded rack design by EEDAS Engineering, GismoPower fabricated two additional MEGA racks, each supporting nine CSI BiHiKu6 540W bifacial PV modules, making up a 9.72KW dual rack MEGA system equipped with 18 x 540W Canadian Solar panels and UL-1741 certified electronic components. The MEGA was classified as a non-building structure and received wind load, snow load and seismic approval for California, and wind code compliance up to 130 mph in North Carolina.

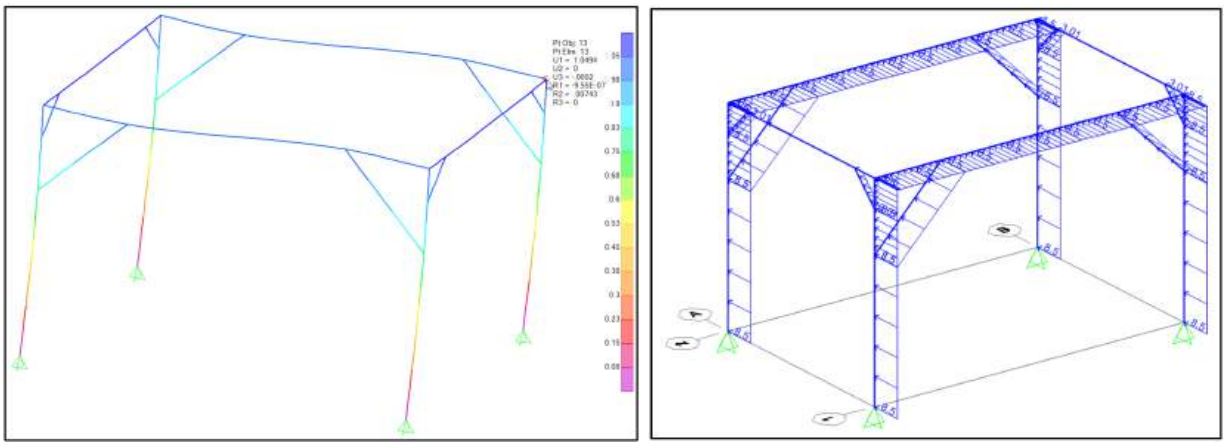

Figure 5: Deflection and Wind Load Diagrams

Upgrading the module wattage to 540 Watt means that an average household in California can cover over 100% of the electric power consumption **with one single 4.86KW MEGA rack alone**. To simulate the expected solar power generation in Los Angeles, a parking lot in downtown Los Angeles was chosen. For this location, we calculated the estimated power generation of a 9.72KW dual rack MEGA equipped with 18 x 540W panels using NREL's PVWatts solar calculator. The estimated solar electricity generation for a dual MEGA is 16.52 MWh/year or 8.26 MWh/year per single rack, which is above the 8.1 MWh annual average electricity consumption of a residential single family home in the Los Angeles area. Considering current prices and electricity rebates in California, the MEGA's economic value proposition for LMI household customers can be summarized as a $18,900 investment that would be recovered in less than 6 years and will generate ~$3,165 yearly savings during the following 19 years.

RESULTS

Print Results

16,520 kWh/Year*

System output may range from 15,739 to 16,886 kWh per year near this location.
Click HERE for more information.

Month	Solar Radiation (kWh / m² / day)	AC Energy (kWh)
January	3.23	858
February	4.02	958
March	5.24	1,362
April	6.55	1,607
May	6.88	1,719
June	7.38	1,759
July	8.03	1,965
August	7.51	1,872
September	6.20	1,519
October	4.74	1,210
November	3.70	929
December	2.89	762
Annual	5.53	16,520

Latitude	34.05° N
Longitude	118.22° W

PV System Specifications

DC System Size	9.72 kW
Module Type	Premium
Array Type	Fixed (open rack)
System Losses	5.87%
Array Tilt	0°
Array Azimuth	180°
DC to AC Size Ratio	1.27
Inverter Efficiency	98%
Ground Coverage Ratio	0.4%
Albedo	*From weather file*
Bifacial	Yes (0.7)

Monthly Irradiance Loss	Jan	Feb	Mar	Apr	May	June	July	Aug	Sept	Oct	Nov	Dec
	0%	0%	0%	0%	0%	0%	0%	0%	0%	0%	0%	0%

Performance Metrics

DC Capacity Factor	19.4%

Figure 6: Projected Annual Electricity Generation after 540W module upgrade

Accomplishments towards Objective 3:
Explore GismoPower as a portable "off-grid" power generator

Figure 7: Off-Grid "Fiona" - Class I EV-Charging diagram (8h - 18h) - Low volume production line

In response to the time delays caused by the unanticipated difficulties with Intertek's UL-Certification procedure, GismoPower decided to advance the "off-grid" investigations and tests which were initially scheduled for May-June 2023 in the Phase I work plan. A Sol-Ark 8K Hybrid inverter and a 5.12KWh EG4-LL LiFePO4 battery were selected as the most suitable components for the first "off-grid" version of the MEGA. The rack incorporates all the Phase I design improvements to fulfill UL-2703 and meet 130 mph wind code compliance. The off-grid Fiona pilot site (See Figure 7) went into live power generation in Sarasota in February 2023.

The product has recently received its own name, the "Fiona," named after Shrek's princess. The "Fiona" continues to deliver electricity as long as the sun is shining. Like Princess Fiona, the MEGA goes into a less attractive mode at night. Of course, depending on the size of the backup battery, the Fiona can continue performing when the grid goes down.

After submitting its SBIR intermediary technical report, the GismoPower team observed noteworthy usability limitations associated with the Class I 1.6KW maximum EV charging capabilities of the Sol-Ark 8K inverter. We pursued an upgrade of the system

to fully support Class II EV charging capability with higher charging power to better accommodate users with higher driven mileages per day.

The approved SBIR Phase I funds to purchase an “Evergrid” prototype system could not be used as initially planned because the prototype system was not available for purchase. GismoPower alternatively acquired with DOE approval an 2023 EG4 18K hybrid inverter with the remaining funds which included a LiFePO4 battery bank with 10KWh capacity.

This grid-forming inverter type also covers the main use case of the “Evergrid” technology to keep a rooftop PV system in operation during power outages and was an adequate replacement to achieve the originally intended research goals.

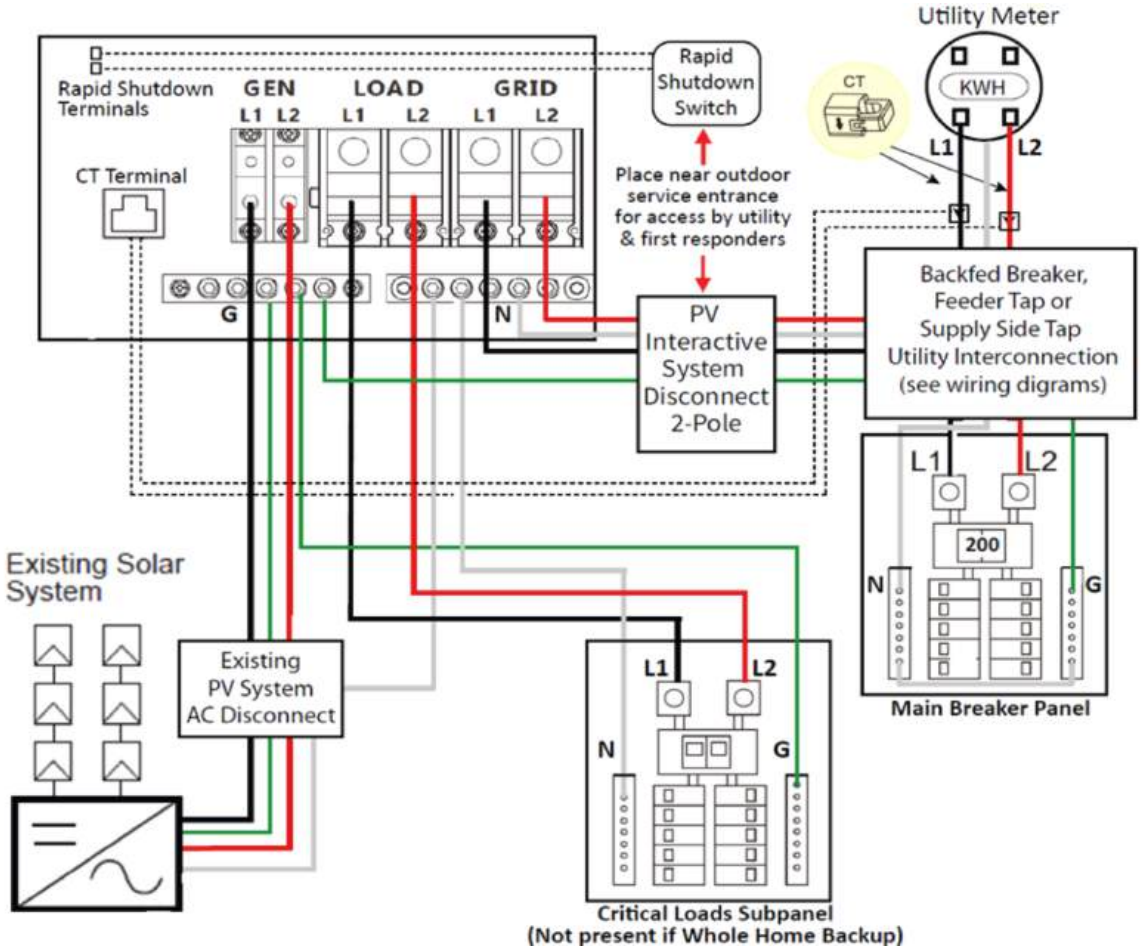

Figure 8: Circuit diagram enabling a continuous power generation of an existing solar array during power outages. (Diagram: EG4 Electronics)

Existing rooftop solar systems without grid-forming inverter capability can be connected to the “Generator” input of this EG4 18K hybrid inverter. In case of a power outage, the EG4 18K will disconnect from the utility grid and activate its grid forming capability, keeping the voltage level at the utility grid connection at a safe level close to 0V.

The EG4 18K hybrid inverter can regulate the power output of a connected inverter at the GEN terminal by slightly adjusting the output frequency. Upon detecting this frequency change, the existing inverter will automatically adjust its power output accordingly.

In the event of a power grid outage, the GEN terminal inside the inverter becomes connected to the LOAD terminal. In this scenario, the hybrid inverter functions as a power source, synchronizing with the grid-interactive inverter to supply power to the nano-grid.

If the solar panels produce more energy than is consumed by the loads, the surplus solar power is stored within the batteries. However, when the solar power production exceeds both the power consumption by the loads and the maximum power the batteries can store (for instance, when the batteries are nearing full capacity), the grid-forming inverter communicates with the grid-following inverter to reduce power output. This is achieved via a frequency-shifting, power-reduction mechanism, ensuring a balanced energy generation and consumption within the micro-grid system.

Inverters that comply with the UL1741SA standard possess the Frequency-Watt feature. This feature mandates that the connected grid-following inverter should decrease its power output in response to an increase in grid frequency. The power output will eventually diminish to zero before the grid frequency exceeds its upper limit.

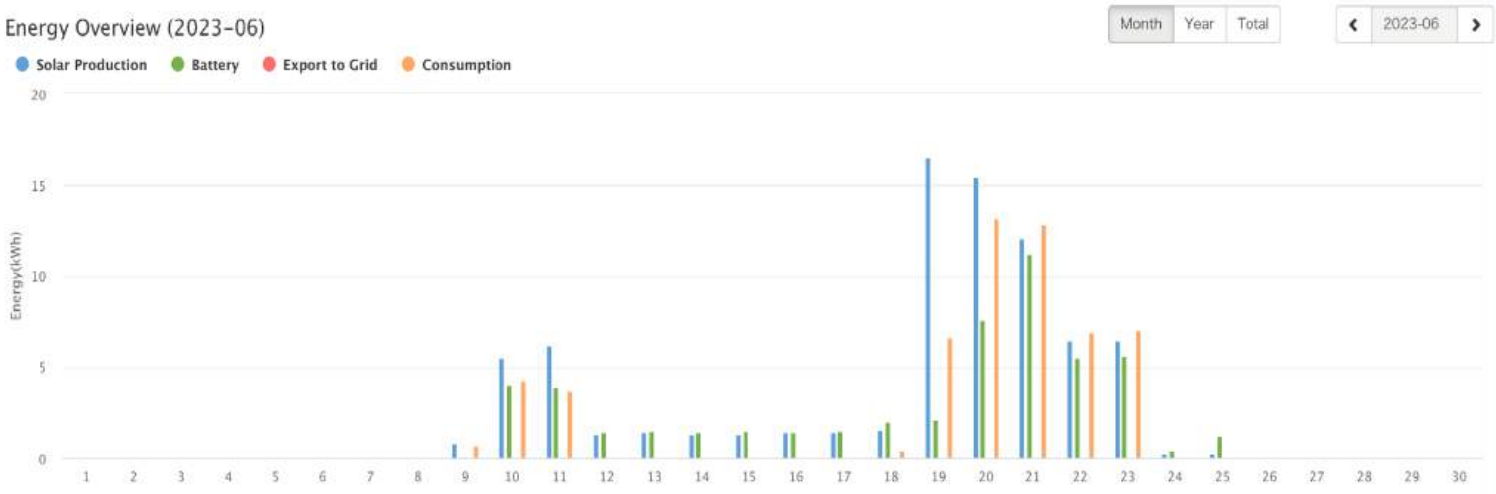

Figure 9: Data collection conducted in June 2023 with the EG4 18K grid forming hybrid inverter

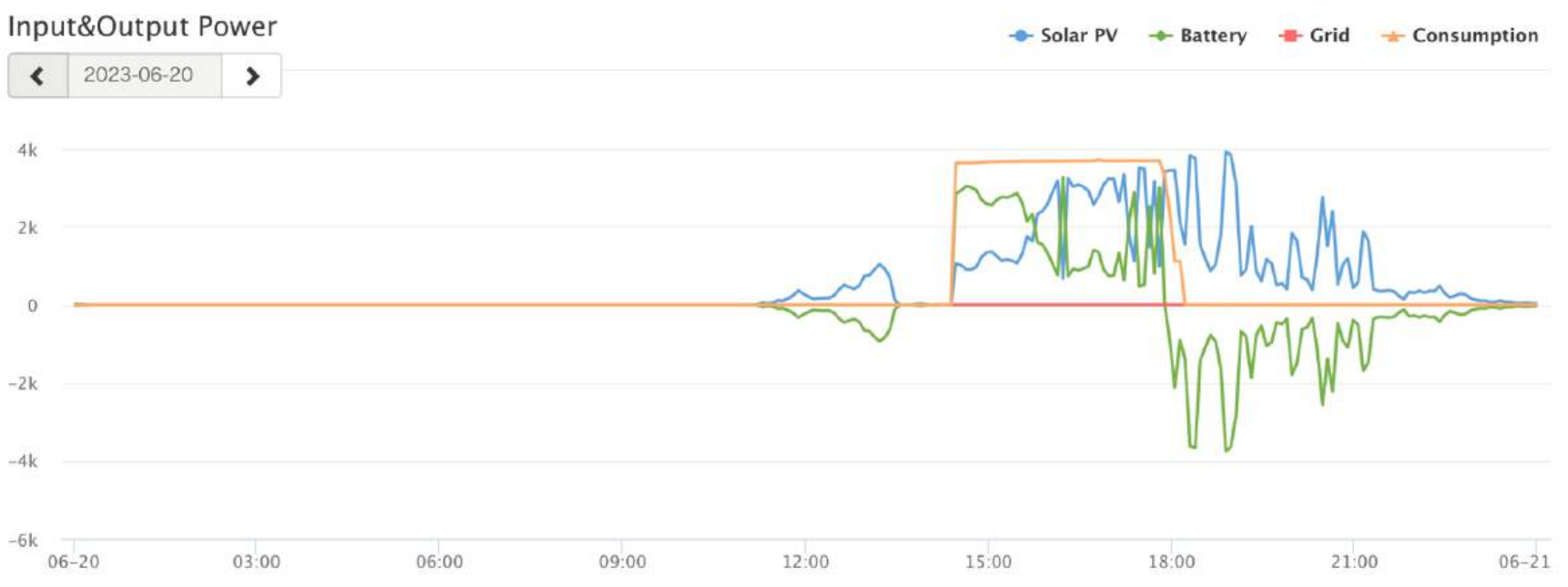

Figure 10: Power & Voltage levels with EV-charger demand during daytime and starting with a full battery in the morning. (Times in UTC

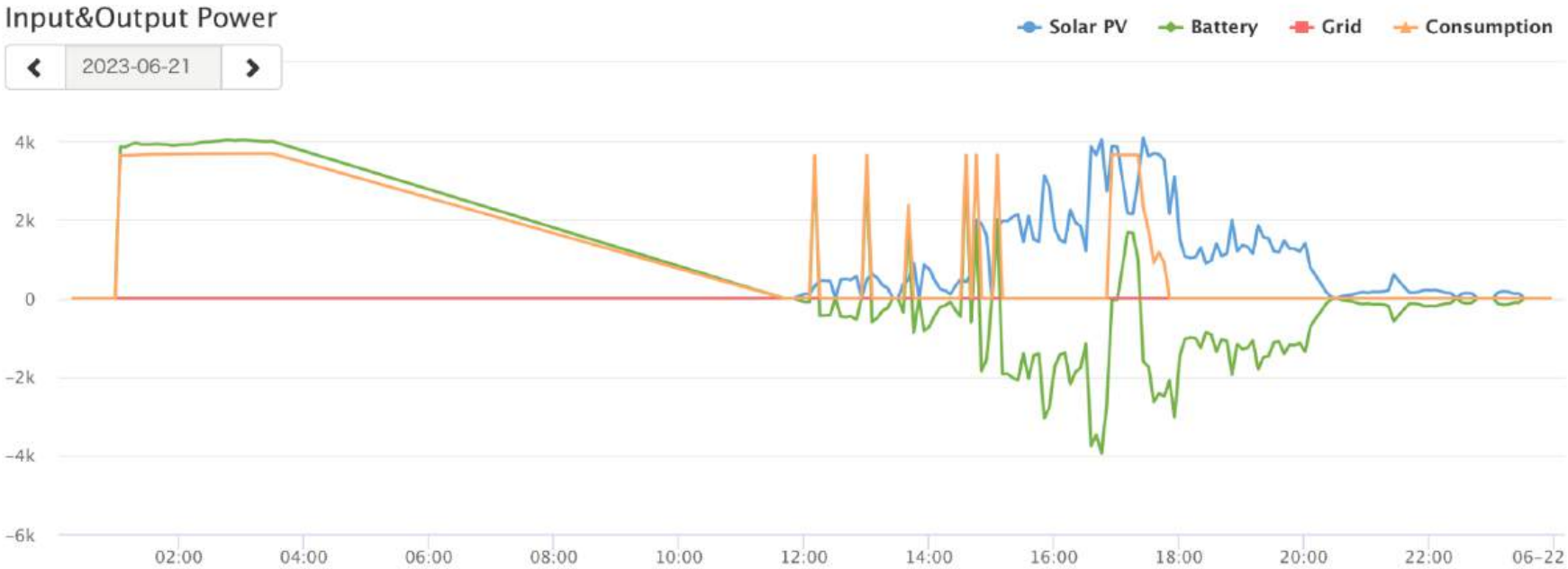

Figure 11: Power & Voltage levels with EV charging demand at night and solar electricity generation starting with an empty battery in the morning. (Times in UTC).

EV-charging started at 1:00 UTC and the 10KWh battery was empty around 3:30 UTC. The inverter system switched to standby mode for ~ 8,5 hours until noon UTC. The slanted lines in between these times are interpolated values and not based on continuous measurements.

Around noon UTC, the inverter woke up due to the beginning solar generation and switched into solar generation mode. Solar power generation remained below the 3.8KW demand from the EV-charger, so the systems switched on and off until 15:00 UTC, when the EV charger was manually disconnected to let the battery charge without intermittent EV charging. At 17:00 UTC the EV charger was reconnected to complete the EV-charge process around 18:00 UTC.

Conclusions

The conducted usability studies with the Sol-Ark 8K inverter combined with a Class I EV charger and the EG4 18K inverter combined with a Class II EV charger revealed that off-grid system operators benefit substantially if they have an awareness of the backup battery's state of charge and the expected solar power generation for the next hours before charging their electric vehicles. This can most likely not be expected from an average user, who might feel frustrated with these limitations.

Writing custom software to better inform average users during off-grid EV charging cycles about the state of the system and the expected performance under individual conditions or a much larger backup battery combined with additional PV generation power would be steps into the right direction for "off-grid" EV-charging operation.

Larger solar installations combined with additional battery capacity will very likely increase the total price beyond the reach of moderate income people, so to focus on facilitating electric grid access for lower & moderate income people as prosumers will be key to making portable plug-in solar affordable.

Including the price of real estate in solar power cost calculations and a simple interconnection process with the electric grid combined with a level economical playing field for commercial and individual prosumers and utilities alike seem indispensable to reach a free and open electricity market and a smooth and worry-free user experience during EV charging with solar energy.

Four out of six MEGA pilot sites currently use common off the shelf SolarEdge SE7600 grid-following PV-Inverter/EV-Chargers as specified in the FSEC 203-17 certification. Pilot Site #5 uses a grid forming Sol-Ark 8K hybrid inverter and Pilot Site #6 a grid forming EG4 18K hybrid inverter, both in off-grid mode.

The power electronics research laboratory at FREEDM System Center at NCSU was GismoPower's first paying customer. With the help of the American Made Solar Prize Voucher funds, NCSU's research team completed their grid impact analysis study based on data collected at the North Carolina pilot site on the NCSU parking deck in February 2023.

In April 2023, the operators of the pilot site in Walnut Creek/CA decided to purchase their MEGA after thorough testing since August 2022. Additional pilot sites in Livermore/CA, Walnut Creek/CA and Sarasota/FL allowed a realistic validation and performance verification of the MEGA system in real-world environments during the Phase I performance period and demonstrated the technical feasibility to receive UL-certification for a reasonably priced domestic appliance which is capable of exporting and selling renewable solar electricity to the electric grid.

The strategy to pursue existing permitting procedures in parallel with the UL-certification process has the additional benefit of enabling the MEGA system to be legally permitted, interconnected and commercialized in California's and North Carolina's beachhead markets as a classic, ground mounted solar carport without a prior completion of the UL-Certification.

GismoPower hired EEDAS Engineering Inc. to recommend structural improvements to reach compliance with wind code requirements up to 130 mph and additional seismic code requirements. EEDAS delivered signed and sealed engineering plans ready for permitting and legally interconnecting as a fixed, ground mounted solar carport. The work plan in cooperation with EEDAS Engineering also included an upgrade to more powerful 540W bifacial PV modules, which was successfully completed.

The substantial progress made in Phase I enables GismoPower to continue NCSU's grid impact analysis studies and to prepare the standardization reform in close cooperation with SLAC National Accelerator Laboratory in Palo Alto.

Keeping a low-volume rack production line on a manual workshop basis seems preferable at this point, because it allows for cost efficient design improvements resulting from the anticipated N&I certification process with Underwriters Laboratory during the pending approval of the SBIR Phase II performance period.

The GismoPower team successfully completed the DeltaClimeVT Cleantech Accelerator in Burlington Vermont by improving their business model, value proposition and their pitch deck presentation with the goal to optimize their dual track go-to market strategy which includes the established permitting and interconnect procedures for ground mounted solar carports and the envisioned nationwide implicit permitting and grid interconnection as a UL-Listed domestic appliance simultaneously.

Figure 12: DeltaClime Vermont Cohort 2023

As the only non-minority prize winner, GismoPower's president Antonia won 4th place ($500) in the 2023 HeroX Parity Prize challenge, which awarded science or technology which helps achieve parity for Black America.

757 Accelerate out of Norfolk/Virginia selected GismoPower and 5 other promising startups out of ~150 applicants for their 2023 cohorte and awarded a $20,000 non-dilutive grant to advance the commercialization of their innovation starting in August 2023.

GismoPower believes that the usage of MEGA racks with grid-tied hybrid inverters combined with small home or electric vehicle batteries will be an ideal configuration for the future, especially in light of the goal to use MEGA household appliances as dispatchable DER peak-power generators in a Virtual Power Plant (VPP) network.

The ongoing collaboration with the SLAC team in Palo Alto has resulted in a potential offer to participate in Stanford's "UGRID" VPP research and meetings are scheduled to advance the physical integration of a MEGA rack at the UGRID research site in Half Moon Bay/CA. The GismoPower team has received the assurance that the collected performance data sets would be publicly available.

Just in time before the due date for this Final Technical Report, the Underwriters Laboratory engineering team provided GismoPower with their letter report as part of the N&I New and Innovative program. UL outlined their vision of the viable path forward for the MEGA solar appliance to obtain UL-Certification in great detail.

GismoPower has shared a copy of the preliminary letter report from UL with their SBIR grant management team and is hopeful that the DOE performance review team feels comfortable approving the funding for Phase II of the commercialization for the Mobile Electricity Generating Appliance MEGA.

References

Pertinent documents to the objectives, accomplishments and the encountered difficulties during the Phase I performance period can be found in this public folder:

https://drive.google.com/drive/folders/1mXQoJ2kqX1YJ0bzK1Zq4hZiO2NPheEGl?usp=share_link

RE: [External] Re: Assurance & Certification Teams - Zoom Meeting

1 message

Matt Snyder Intertek <matt.snyder@intertek.com>
To: Erika Ginsberg-Klement <erika@gamepower.com>, Achim Ginsberg-Klement <achim@gamepower.com>
Cc: Brandon Baque Intertek <brandon.baque@intertek.com>, Teresa Peck Intertek <teresa.peck@intertek.com>, Christopher Flueckiger <christopher.flueckiger@intertek.com>, Kenny Villegas Intertek <kenny.villegas@intertek.com>, Lalane Brackett <lbrackett@pentelloswing.org>, Sam Doshi Intertek <samantha.doshi@intertek.com>, James Deacher Intertek <james.deacher@intertek.com>

Achim,

After internally discussing your product design and theory of operation as it pertains to the installation codes present in the United States at this time, it has been determined that your product is not eligible for Certification and use of the ETL mark. References to some of the issues with the codes are bulet pointed below. In addition to the points mentioned, there are some inherently unsafe situations that could be created by the use of a PV system attaching to a NEMA receptacle via a plug that would have line pinups exposed if unplugged and the potential to backfeed the electrical grid in a power out situation since there is no automatic transfer with anti islanding protection relay to protect the grid. Sic based on all of these points, I have made the decision that this product design is not open for product certification.

- NFPA 70, the National Electrical Code (NEC), does not address non-permanent wiring systems for PV module source circuits for inverters.
- NEC article 690 covers the requirements for permanently installed photovoltaic (PV) systems and does not address PV systems that are not a licensed electrician.
- NEC article 100 requires the use of transfer switches to switch from grid interactive mode to standalone mode to create a local microgrid for backup power in the event of a grid outage. This also requires installation by a licensed electrician.
- UL 1741, the safety standard for Inverters, Converters, Controllers and Interconnection System Equipment for Use With Distributed Energy Resources, requires permanent wiring from inverters entering a structure and has no provisions for flexible cord and plug connections of inverter output to a dwelling's distribution panel.

L. Matthew Snyder
Certification Sr. Director
Electrical

Direct: +1 607 758 6624
Mobile: +1 315 565 5127
Office: +1 800 345 3851
Skype: matt.snyder77
www.intertek.com

intertek
Intertek, 3933 US Route 11 Cortland NY 13045

From: Erika Ginsberg-Klement <erika@gamepower.com>
Sent: Monday, April 3, 2023 1:22 PM
To: Matt Snyder Intertek <matt.snyder@intertek.com>
Cc: Brandon Baque Intertek <brandon.baque@intertek.com>, Teresa Peck Intertek <teresa.peck@intertek.com>, Christopher Flueckiger <christopher.flueckiger@intertek.com>, Kenny Villegas Intertek <kenny.villegas@intertek.com>, Lalane Brackett <lbrackett@pentelloswing.org>
Subject: Re: [External] Re: Assurance & Certification Teams - Zoom Meeting

Matthew,

Thank you for trying to get to the bottom of this, but I am still as confused as I was before about the path forward for our certification.

5/25/2022

Bonding Path Drawing – The Bonding Path Drawing you provided needs to be revised to reflect the bonding path that we have described. The bonding path should be shown as a dashed line to show all grounding and bonding paths provided to the Equipment Grounding Conductor for both the overall Mega system (pictured) and inverter that will be employed with the Mega system. Please refer to the following drawing, which illustrates the Mega Circuit Diagram:

2/23/2023 - *I held a meeting with my Team to have a review. It was stated that the feed-to-the-grid option was a hot topic and was well known that there is a lot of funding to support a design of what you are developing. It was noted that the bonding path, between lines 2-3 for the NEMA plug was an item that would be non-compliance. The bonding path, lines 2-3 for the NEMA plug would need to be changed. It was noted that the bonding path of lines 2-3 is fault condition. In most cases, a Bonding After is to be the client know what is non-compliant and what is required to be changed to meet compliance. During that meeting, it was clear that the design needed to change.*

Between May 2022 and February 2023, it appears that our certification requirements have evolved from the need to revise a drawing to:

"*It was clear that the design needed to change*".

The apparent necessity for NEMA 5-20 or NEMA 14-50 household appliance connectors designed for connecting domestic household appliances and power

tools to the low voltage power grid to comply with the UL 6703 standard for solar connectors was notively communicated for the first time on March 6th 2023

in the quote for the additional Preliminary Design Review ($6,825).

PV inverters and connectors in the PV circuit are exposed to significantly higher voltages and lower amperage on the PV side (e.g.~600VDC in SolarEdge based systems)

compared to the lower voltages encountered on the split-phased power grid side (~240VAC).

Applying the proven standards used for 240V/208VAC grid-tied, domestic appliances to adequately serve the safety requirements for the higher currents encountered

on the power grid side. MC4 connectors might be UL 6703 compliant, but they would melt under the high amperages encountered on the electric grid side of the PV inverters.

From a safety perspective it appears to make sense to use PV connectors on the PV side and power-grid connectors on the power-grid side.

Maybe one of the subject matter experts can help correct me here, but I believe NEMA 5-20 or 14-50 domestic appliance connectors were not designed to comply with UL 6703.

We do not have a UL 6703 certification for a NEMA 5-20 plug and might never be able to find one.

The contained EV-Charger/PV-Inverter specified in the FSEC 2013-17 certification (See attached) uses the same NEMA 6-50 connector used for other UL Listed and certified Class 3 EV-Chargers

on the market today. I am open to learning, but at this point I can honestly not imagine a scientifically founded reason why a Class 6 EV-Charger combined with a PV-Inverter like

the SolarEdge SE7600 would be exposed to different electrical conditions at the AC power grid side than a Siemens Class 6 EV-Charger without the PV system attached.

Having received multiple conflicting opinions from various parties at different ETL accredited certification laboratories about applicable standards for grid-tied,

electrically generating household appliances, I still believe in the laws described by Chen and Kirchhoff.

Do you agree with the Assurance Team's suggestion to explore modification of existing UL Standards or the establishment of a new UL standard as a path forward?

We are also open to using approved connectors which are certified to operate on the power-grid side and in the solar circuit, but I do not know of any.

Please advise,

Achim

---------- Forwarded message ---------
From: **Matt Snyder Intertek** <matt.snyder@intertek.com>
Date: Wmn, Apr 3, 2023, 4:02 PM
Subject: Re: [External] Re: Assurance & Certification Teams - Zoom Meeting
To: Brandon Baque Intertek <brandon.baque@intertek.com>, Brandon Baque Intertek <brandon.baque@intertek.com>
Cc: Teresa Peck Intertek <teresa.peck@intertek.com>, Christopher Flueckiger <christopher.flueckiger@intertek.com>, Kenny Villegas Intertek <kenny.villegas@intertek.com>

Achim,

Can you attach the certification for the plug your using. I want to see if you carry the UL 6703 approval. Components need to be certified for their intended usage, that certification showing approval to UL 6703 will likely clear up some of the confusion.

L. Matthew Snyder
Certification Sr. Director
Electrical

Direct: +1 607 758 6624
Mobile: +1 315 565 5127
Office: +1 800 345 3851
Skype: matt.snyder77
www.intertek.com

intertek
Intertek, 3933 US Route 11 Cortland NY 13045

From: Achim Ginsberg-Klement <achim@gamepower.com>
Sent: Monday, March 27, 2023 9:47 PM
To: Brandon Baque Intertek <brandon.baque@intertek.com>
Cc: Teresa Peck Intertek <teresa.peck@intertek.com>, Matt Snyder Intertek <matt.snyder@intertek.com>, Christopher Flueckiger <christopher.flueckiger@intertek.com>, Kenny Villegas Intertek <kenny.villegas@intertek.com>
Subject: Re: [External] Re: Assurance & Certification Teams - Zoom Meeting

Hello Brandon,

I have attached the email dated March 7th with the critical statement for us, which needs clarification from the certification team:

"It was noted that the bonding path, between lines 2-3 for the NEMA plug was an item that would be non-compliance."

The Preliminary Design Review from May 2022 pointed out an issue with the **drawing** of the plug, but not with the cage of the NEMA plug itself.

but on March 20th we received an email with the statement that the certification team is unable to make that determination.

As you know, we all made tenacious attempts to bring the assurance team and the certification team together in a joint meeting to discuss this,

but our attempts remained null.

Facing an issue with a drawing as outlined in the PDR or a general issue with the plug constitutes a substantial difference for us

and we believe that the certification team had or should have had full knowledge about our NEMA plug connector for over a year.

We would be delighted to continue to work with the assurance team on resolving the issue outlined in the PDR report, but we need the clear confirmation

in advance that the **drawing** of the plug is the core issue and that using the plug-in connection will not prevent us from obtaining the UL Listing

for our electrically generating appliance.

We remain open to discuss potential solutions jointly with the assurance and the certification teams following Chris Flueckiger's guidance,

but we see little value in continuing on a path where all solutions will be overridden by the higher formal authority of Intertek's certification team.

Please advise.

Kind regards,
Achim Ginsberg-Klement

On Thu, Mar 30, 2023 at 3:51 PM Brandon Baque Intertek <brandon.baque@intertek.com> wrote:

Hello Achim,

Thank you for your time and partnership thus far, we are appreciative of your efforts.

At this point, the only way we can proceed is with your response on how you plan to address the non-conformances, which were outlined during the PDR that our Assurance team has provided. Of course an option for compiling that response would be to further utilize our Assurance group to assist.

Attached for your reference again is the letter report that was provided, which outlines those non-conformances.

Brandon Baque
Sr. Engineer, Electrical & Wireless
Mobile: 607-592-9417
LinkedIn: Link [linkedin.com]
www.intertek.com [name02.safelinks.protection.outlook.com]

intertek
25800 Commerzentre Drive
Lake Forest, CA 92630

JOIN BBEB.COM TO BUILD BACK AN EVER BETTER WORLD!
[bbeb.com]

From: Achim Ginsberg-Klement <achim@gamepower.com>
Sent: Monday, March 20, 2023 6:05 AM
To: Brandon Baque Intertek <brandon.baque@intertek.com>, Brandon Baque Intertek <brandon.baque@intertek.com>
Cc: Kenny Villegas Intertek <kenny.villegas@intertek.com>, Christopher Flueckiger <christopher.flueckiger@intertek.com>, Stefapoulos, Georgios (CONTR) <georgios.stefapoulos@ee.doe.gov>
Subject: Re: [External] Re: Assurance & Certification Teams - Zoom Meeting

Good morning Sam and Brandon,

At our last meeting you mentioned that we should arrange a meeting to talk about when and how to move forward.

Can you please give us an update?

Kind regards,
Achim

On Thu, Mar 9, 2023 at 8:08 PM Sam Doshi Intertek <samantha.doshi@intertek.com> wrote:

Achim,

Please see below in **black bold**.

> Please confirm that the plug connection depicted in the first Initial Design Review by the Intertek Assurance Team will be acceptable for the Intertek Compliance Team to pass final inspection. **I am unable to answer this question because only Assurance has gone through the technical documentation you have provided. Kenny Villegas Intertek can speak better to this. It is likely some changes are required. Kenny please correct me if I'm wrong. Additionally, this would be a question that is answered on the Compliance side after Compliance PDR has been completed.**
>
> In November we were promised an updated itemized list of all tests and line items including price quotes that are needed to pass the final certification. Please provide an updated itemized quote. **The list of itemized tests and cost is a deliverable after the Compliance PDR has finished. As a budgetary number, PV racking system testing is roughly $25 – 30k. This is only one portion of your product.**

Cheers,
Sam

From: Achim Ginsberg-Klement <achim@gamepower.com>
Sent: Thursday, March 9, 2023 4:17 PM
To: Sam Doshi Intertek <samantha.doshi@intertek.com>
Cc: Kenny Villegas Intertek <kenny.villegas@intertek.com>, Brandon Baque Intertek <brandon.baque@intertek.com>, Christopher Flueckiger <christopher.flueckiger@intertek.com>, Stefapoulos, Georgios (CONTR) <georgios.stefapoulos@ee.doe.gov>
Subject: [External] Re: Assurance & Certification Teams - Zoom Meeting

Samantha,

Thank you for clarifying some items for us today. We enjoyed communicating with you directly and hope that we can continue to avoid future misunderstandings

by keeping this direct line open.

We received Brandon's quote for a second Preliminary Design Review a few hours ago and would appreciate if you could provide the following clarification

before we move forward:

> Please confirm that the plug connection depicted in the first Initial Design Review by the Intertek Assurance Team will be acceptable for the
> Intertek Compliance Team to pass final inspection.
>
> In November we were promised an updated itemized list of all tests and line items including price quotes that are needed to pass the final certification.
> Please provide an updated itemized quote.

Sincerely,

Achim & Erika

On Thu, Mar 9, 2023 at 2:14 PM Sam Doshi Intertek <samantha.doshi@intertek.com> wrote:

Achim,

Thank you for the call today. I really appreciate you sharing your feedback.

As a summary:

- Brandon to set up a meeting with our Assurance team to review all open items on your project and send updated deliverables.
- Brandon to provide financial incentives
- After all open items have been closed with Assurance, the project moves to Compliance (Q-01340358)

@Brandon Baque Intertek, did I miss anything?

Cheers,
Sam Doshi
Engineering Manager
Electrical & Wireless

Direct: +1 (949) 393- 3526
www.intertek.com [name02.safelinks.protection.outlook.com]

intertek
25800 Commerzentre Dr, Lake Forest, CA 92630

---Original Appointment---
From: gogreenpower@gmail.com <ryan@sunpower@gmail.com>
Sent: Wednesday, March 8, 2023 10:30 AM
To: gogreenpower@gmail.com; Sam Doshi Intertek; Kenny Villegas Intertek; Christopher Flueckiger
Cc: Brandon Baque Intertek; Brandon Baque Intertek; Matt Snyder Intertek
When: Thursday, March 9, 2023 10:30 AM-10:31 AM America/Los_Angeles.
Where: https://us05web.zoom.us/j/89738623273?pwd=YERTVDBOKdQyNSQxNVJ8Zy3ZOOBdUT09 [us05web.zoom.us]

Achim Ginsberg-Klement is inviting you to a scheduled Zoom meeting.

Join Zoom Meeting
https://us05web.zoom.us/j/89738623273?pwd=YERTVDBOKdQyNSQxNVJ8Zy3ZOOBdUT09 [google.com]

Meeting ID: 897 3862 3273
Passcode: v2ad9M

When

Thursday Mar 9, 2023 - 3:30pm - 4:15pm (Eastern Time - New York)

Location

https://us05web.zoom.us/j/89738623273?pwd=YERTVDBOKdQyNSQxNVJ8Zy3ZOOBdUT09 [us05web.zoom.us]
View map [google.com]

Guests

gogreenpower@gmail.com - **organizer**
samantha.doshi@intertek.com
kenny.villegas@intertek.com
christopher.flueckiger@intertek.com
View all guest info [calendar.google.com]

Reply for samantha.doshi@intertek.com

[calendar.google.com [calendar.google.com]]Reply [calendar.google.com] [calendar.google.com [calendar.google.com]]Yes [calendar.google.com] [calendar.google.com [calendar.google.com]]Maybe [calendar.google.com]

[calendar.google.com [calendar.google.com]]More options [calendar.google.com]

Invitation from Google Calendar [calendar.google.com]

You are receiving this email because you are an attendee on the event. To stop receiving future updates for this event, decline this event.

Forwarding this invitation could allow any recipient to send a response to the organizer, be added to the guest list, invite others regardless of their own invitation status, or modify your RSVP. Learn more [support.google.com]

This message is from an EXTERNAL SENDER - please be CAUTIOUS, particularly with links and attachments.

JOIN BBEB.COM TO BUILD BACK AN EVER BETTER WORLD!
[bbeb.com]

Note Quality Assured

CONFIDENTIALITY NOTICE

This email may contain confidential or privileged information. If you are not the intended recipient, or the person responsible for delivering the message to the intended recipient then please notify us by return email immediately. Should you have received this email in error then you should not copy this for any purpose nor disclose its contents to any other person.

http://www.intertek.com [name02.safelinks.protection.outlook.com]

This message is from an EXTERNAL SENDER - please be CAUTIOUS, particularly with links and attachments.

Gmail

Erika Ginsberg-Klemmt <gogismopower@gmail.com>

Re: FSEC PV Systems Review Committee Findings

1 message

Jim Fenton <jfenton@fsec.ucf.edu> Mon, Apr 29, 2024 at 4:01 PM
To: Erika Ginsberg-Klemmt <erika@gismopower.com>, Achim Ginsberg-Klemmt <achim@gismopower.com>
Cc: Sandra Sovinski <sandra.sovinski@ucf.edu>, Colleen Kettles <ckettles@fsec.ucf.edu>, Philip Fairey <pfairey@fsec.ucf.edu>, Winston Schoenfeld <winston@ucf.edu>

Erika Ginsberg-Klemmt and Achim Ginsberg-Klemmt,

This email is to confirm the revocation of prior certification #702107 and the denial of the second application #702326 by FSEC, having been affirmed by the Review Committee, is the final FSEC decision and final agency action.

James M Fenton


```
James M. Fenton
Director, FSEC Energy Research Center
Professor, Materials Science and Engineering
Vice President of The Electrochemical Society
Fellow of the Electrochemical Society
University of Central Florida
1679 Clearlake Road
Cocoa, Florida 32922-5703
Voice:  321/638-1002
Fax:    321/638-1010
mailto: JFenton@fsec.ucf.edu

Visit FSEC at:  https://energyresearch.ucf.edu/
```


On 4/24/2024 1:19 AM, Erika Ginsberg-Klemmt wrote:

> Dear Ms. Sovinski and Dr. Fenton,
>
> I am writing to formally appeal the decision by the Florida Solar Energy Center (FSEC) to "deny" the certification previously granted to GismoPower's Mobile Electric Generating Appliance (MEGA) under certificate #702107.
>
> We believe this action was taken without adequate justification or adherence to the established procedural guidelines outlined in FSEC Standard 203-17. Granted certifications can only be revoked and cannot be denied retroactively according to the applicable standard.
>
> ***Concerns Regarding Procedural Adherence:***
> 1. Lack of Specific Discrepancies: According to FSEC Standard 203-17, section 10.5.2.2, revocation should occur only under specific conditions, including failure to correct a discrepancy after it has been identified by FSEC. In our case, no specific discrepancies were communicated to us prior to the revocation, nor were we given the opportunity to correct such discrepancies, which contradicts the requirement that the supplier must be given 30 days to make corrections.
>
> 2. Absence of Misrepresentation: The revocation notice did not allege any deliberate misrepresentation or misuse of the certification by GismoPower. As such, the basis for revocation remains unclear and appears to be inconsistent with the guidelines that govern FSEC-initiated revocation.
>
> ***Request for Detailed Justification and Reinstatement:***
> - We respectfully request a detailed written explanation outlining the specific reasons for the revocation,

including any discrepancies noted by the FSEC Review Committee. Understanding these reasons is crucial for us to address any issues and comply with FSEC standards.
- We seek immediate reinstatement of our certification during the review period as per the due process outlined in the FSEC regulations, ensuring that our operations can continue without undue disruption.

Commitment to Compliance:
GismoPower is committed to adhering to all relevant codes and standards. We have always strived to maintain open and transparent communications with FSEC and have acted in good faith to ensure our systems meet all required guidelines and regulations.

We believe that a constructive review of this matter will affirm that the initial certification was merited based on the compliance of our product at the time of certification. A reversal or modification of the revocation decision would allow us to continue contributing to Florida's solar energy landscape safely and effectively.

For your convenience, we have attached a second Single Line Diagram depicting the MEGA's plug-in grid connection stamped by a different licensed engineering firm to confirm compliance with the National Electric Code once again.

We appreciate your attention to this appeal and look forward to your prompt response. Please let us know if there are any further details or discussions needed to expedite this process.

Sincerely,

Achim Ginsberg-Klemmt
GismoPower LLC

On Mon, Apr 15, 2024, 3:43 PM Jim Fenton <jfenton@fsec.ucf.edu> wrote:

> Achim Ginsberg-Klemmt:
>
> Based upon the Review Committee's findings FSEC affirms the initial decision to deny approval of PV system certification applications #702107 and #702326. The Review Committee voted unanimously to affirm the decision to deny the certification of these two system applications due to their violation of NFPA 70 National Electric Code (NEC) 2017, specifically section 705.12.
>
> James Fenton
>
> --
> James M. Fenton
> Director, FSEC Energy Research Center
> Professor, Materials Science and Engineering
> Vice President of The Electrochemical Society
> Fellow of the Electrochemical Society
> University of Central Florida
> 1679 Clearlake Road
> Cocoa, Florida 32922-5703
> Voice: 321/638-1002
> Fax: 321/638-1010
> mailto: JFenton@fsec.ucf.edu
>
> Visit FSEC at: https://energyresearch.ucf.edu/

energies

IMPACT FACTOR 3.9

CITESCORE 8.3

Article

Barriers to Balcony Solar and Plug-In Distributed Energy Resources in the United States

Daniel L. Gerber, Achim Ginsberg-Klemmt, Lyn Stoler, Jordan Shackelford and Alan Meier

Special Issue
Electronics for Energy Conversion and Renewables

Edited by
Dr. Andrea Toscani, Dr. Nicola Delmonte and Dr. Danilo Santoro

MDPI

https://doi.org/10.3390/en18082132

energies

MDPI

Article

Barriers to Balcony Solar and Plug-In Distributed Energy Resources in the United States

Daniel L. Gerber [1,*], Achim Ginsberg-Klemmt [2], Lyn Stoler [3], Jordan Shackelford [1] and Alan Meier [1]

[1] Lawrence Berkeley National Laboratory, Building Technologies Urban Systems Department, Berkeley, CA 94720, USA
[2] GismoPower LLC, Sarasota, FL 34239, USA
[3] Impulse Labs, San Francisco, CA 94103, USA
* Correspondence: dgerb@lbl.gov

Abstract: Plug-in distributed energy resources (DERs), such as balcony solar, backfeed power to the home through a standard plug. These systems may represent the future of residential solar and storage, particularly as recent net metering policies have reduced the economic appeal of rooftop solar. While plug-in DERs have seen widespread success in Europe, their U.S. market is stagnant. This paper reviews the technical, interconnection, and regulatory barriers hindering the adoption of plug-in DERs. We first discuss the technical barriers, which include touch safety, breaker masking, and bidirectional ground-fault circuit interrupters. We then examine utility perspectives on plug-in DERs and strategies for navigating interconnection challenges. Finally, we discuss regulatory hurdles related to UL standards and the National Electrical Code.

Keywords: balcony solar; plug-in; distributed energy resources; battery storage; National Electrical Code; utility

check for updates

Academic Editors: Nicola Delmonte, Andrea Toscani and Danilo Santoro

Received: 21 March 2025
Revised: 10 April 2025
Accepted: 15 April 2025
Published: 21 April 2025

Citation: Gerber, D.L.; Ginsberg-Klemmt, A.; Stoler, L.; Shackelford, J.; Meier, A. Barriers to Balcony Solar and Plug-In Distributed Energy Resources in the United States. *Energies* **2025**, *18*, 2132. https://doi.org/10.3390/en18082132

Copyright: © 2025 by the authors. Licensee MDPI, Basel, Switzerland. This article is an open access article distributed under the terms and conditions of the Creative Commons Attribution (CC BY) license (https://creativecommons.org/licenses/by/4.0/).

1. Introduction

1.1. Background and Motivation for Plug-In Distributed Energy Resources

For decades, U.S. homeowners have benefited from residential-scale distributed energy resources (DERs). Rooftop solar can reduce electricity bills, with payback periods as short as five years under optimal conditions [1,2]. Residential energy storage systems (ESSs) have also grown in popularity, enabling load shifting, grid services, and multi-day resilience when paired with solar. However, despite recent battery price declines [3], adding storage increases system costs and extends the payback period.

Solar adoption has surged in recent years, with many individuals generating their own electricity and exporting excess power during peak solar hours. To address challenges in balancing grid-side supply and demand, public utility commissions have introduced new policies and tariff structures. In 2023, the California Public Utilities Commission implemented Net Energy Metering (NEM) 3.0 [4], significantly reducing compensation for new solar producers' energy exports. While NEM 3.0 helps utilities manage costs and incentivizes home energy storage, it greatly reduces the financial benefits of solar ownership. As a result, the payback period for rooftop solar in California has risen to as much as 15 years [1]. NEM 3.0 has reportedly led to a 77–85% decline in rooftop solar sales, dealing a severe blow to the industry [5].

The residential solar market primarily serves homeowners, with limited access for renters. Studies highlight the potential for rooftop solar to simultaneously lower renters' total expenses and increase landlords' rental income [6,7]. However, these benefits remain

largely unknown to both parties [6]. Renters often struggle to assess whether reduced electricity bills would offset higher rent, while landlords view solar as an investment that only benefits tenants. As a result, renter participation in the solar market remains low.

Over the past decade, material costs have dropped as photovoltaic (PV) modules and batteries have become commodities. Today, residential rooftop solar [8] and storage [9] are largely driven by soft costs, including engineering, permitting, procurement, overhead, and profit. Rooftop installations also include the costs of labor, truck rolls, and electrical balance-of-system (BOS) equipment. Together, these costs can double the capital cost of smaller systems. The U.S. Department of Energy (DOE) is actively exploring ways to reduce installation, BOS, and soft costs. One promising approach is a transition to plug-in DERs, which could eliminate these costs by transforming residential solar into a simple cord-and-plug solution.

We define plug-in DERs by their ability to backfeed power into the home through an AC plug. They include emerging technologies like balcony solar, plug-in solar carports, bidirectional UPS batteries, and bidirectional appliances with integrated batteries. Figure 1 illustrates a common setup for connecting balcony solar and storage to a building. Plug-in DERs are classified as cord-and-plug devices, and sold as retail hardware. While bidirectional EV chargers could eventually qualify as plug-in DERs, they currently require a hardwired connection.

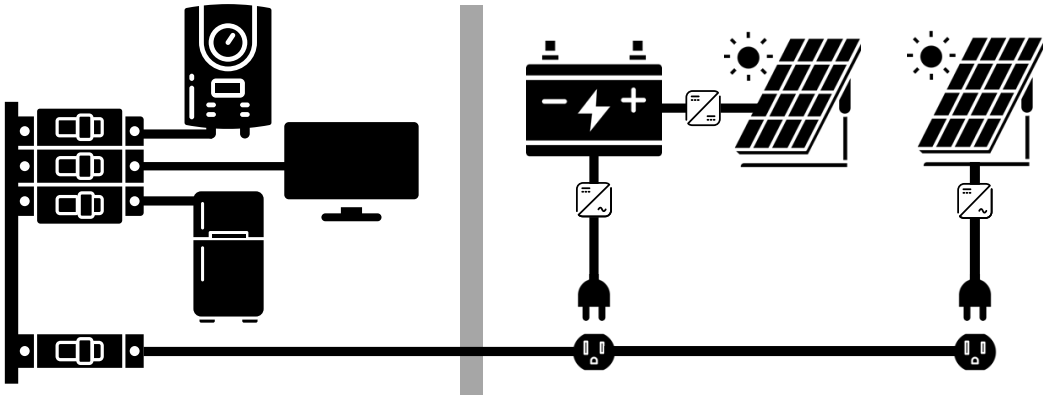

Figure 1. Balcony solar kits contain a PV module and inverter that plugs into a balcony receptacle. Typical balcony solar/storage kits plug in from the battery inverter. Both technologies backfeed through a plug to power other loads in the home. White boxes indicate DC/AC inverters or DC/DC converters.

Plug-in DERs, such as balcony solar, have gained popularity across Europe, primarily due to their potential for upfront cost savings. By eliminating BOS, installation, and soft costs, these systems offer a more affordable alternative. Most knowledge on balcony solar's payback period has been compiled using the European Photovoltaic Geographical Information System (PVGIS) toolset [10]. A continent-wide study [11] found payback periods as short as three years in the Netherlands. Payback periods vary significantly based on the electricity rate, with estimates of 3.5 years in Germany and 5.5 years in France. In Slovenia, the payback period is estimated at 6.7 years, aligning with one of the few independent studies on this topic [12]. One of the only studies on the U.S. market estimates a 5-year payback period, based on 2015 costs and solar irradiance models for upper Michigan [13]. Given these figures, we would expect today's payback periods to be even shorter in most of the U.S.

Beyond upfront cost savings, plug-in DERs offer several key advantages. They provide renters with a unique option to participate in the solar and storage markets that can be easily moved between homes and apartments. Their portability enables flexible resilience,

allowing users to relocate units as needed. Additionally, they serve as a viable solution for homes with heavily loaded electrical panels, which would otherwise require costly upgrades to support solar or storage integration.

While the European market is thriving, plug-in DERs face significant barriers to sales and adoption in the U.S. This paper examines the technical, regulatory, and utility interconnection challenges hindering their adoption, drawing insights from stakeholder interviews and independent standards research.

1.2. Adoption of Plug-In DERs

The most successful examples of plug-in DER adoption have been seen in European markets. By the end of 2024, over 1 million units had been sold in Germany [14,15], with no safety incidents reported, aside from cases of tampering. According to our German industry consultant interviewee, Germany's success took over half a decade to achieve.

The effort began in 2017, when the German certification body Verband der Elektrotechnik (VDE) released the testing standard VDE V 0100-551-1 [16]. This standard addressed the safety requirements and integration of plug-in PV systems, such as balcony solar, into low-voltage electrical installations. In 2018, VDE released VDE AR N 4105 [17], which further outlined the technical requirements for connecting power-generating devices. This regulation established a 600 W limit for connection without an electrician's signature, and was based on a 2016 Fraunhofer report [18] showing that 600 W of backfeed was safe even in worst-case scenarios. The limit was later raised to 800 W to align with the lower limit of regulation under the European Network Code [19]. Today, Germans can purchase, register, and plug in up to 800 W of balcony solar.

German utilities initially had mixed reactions, with concerns focused on liability, safety, fire risks, and potential damage to their public image. Much of the dialogue to alleviate liability concerns involved technical explanations and reasoning. Surprisingly, profit was of secondary concern, and many German utilities even expressed interest in using balcony solar for public relations purposes. The creation in 2019 of a universal online registration form for plug-in PV was a key turning point in these discussions and played a crucial role in gaining utility acceptance of the technology.

The German political climate also played a significant role in the widespread adoption of balcony solar. Since 2018, activists, media, and eventually politicians advocated for broad acceptance. While legislation like the 2022 German Easter Package initially created unfavorable conditions for balcony solar, these provisions were eventually removed following active lobbying and media pressure. Ultimately, the Russo-Ukrainian War in 2022 and Germany's subsequent move away from Russian gas became the most influential political factor driving the adoption of balcony solar.

Recent technical reports highlight the market growth of balcony solar and outline the remaining regulatory barriers across European Union member states [20]. As of today, plug-in solar is permitted with proper registration or notification in several European countries, including Germany, the Netherlands, Belgium, Spain, Portugal, Switzerland, Austria, Italy, Slovenia, Slovakia, Poland, and Lithuania [11]. France allows balcony solar but prohibits power export. In Great Britain and Greece, balcony solar must comply with building codes, while Croatia and Bulgaria apply rooftop PV regulations to balcony systems—often to their detriment. Plug-in solar is currently banned in Denmark, Sweden, and Hungary. Other European countries do not have specific regulations governing plug-in DERs. Among the limited research on the U.S. regulatory environment, a pioneering 2016 study examines how plug-in DERs align with the National Electrical Code (NEC) [21]. It also proposes an early concept for a device registration form to streamline interconnection agreements. Since that study, the U.S. has seen little progress toward achieving regulatory compliance.

Many parties in the U.S. are now aware of the success plug-in DERs have achieved in Europe, and many smaller vendors are eager to enter the U.S. market. However, as previously mentioned, the technology faces technical, regulatory, and utility interconnection barriers. The recent Utah bill HB340 [22] may help remove some of these barriers, particularly regarding utility interconnection within the state. It permits up to 1200 W of backfeed, though it requires devices to be tested and certified by a recognized lab such as Underwriter Laboratories (UL). Despite this state law, technical and regulatory challenges will still need to be addressed. Nonetheless, HB340 received a unanimous vote by Utah's state legislation, highlighting a bipartisan excitement for legalizing plug-in DERs [23].

Beyond Utah, few other jurisdictions have officially approved plug-in DERs, and none at the state level. We are only aware of two other utilities that have approved interconnection agreements with plug-in DERs: Lacreek Electric at the Oglala Lakota Reservation in South Dakota (October 2024), and NV Energy in Nevada (December 2024).

Despite these barriers, several companies and organizations have found foothold markets for installation in the U.S. Our nonprofit installer interviewee has developed a subscription-based business model, allowing occupants to rent plug-in DERs at a fraction of the expected energy-cost offset. The rental also includes technical support and installation. Some systems require basic electrical skills, such as opening a breaker panel or replacing an outlet. The plug-in industry may well create an "electrician-lite" job class for low-cost basic electrical work (also referred to as a qualified electrical worker).

1.3. Scope, Contributions, and Overview of Paper

This paper provides an overview of the technical, regulatory, and utility-related barriers to the adoption of plug-in DERs in the U.S. Rather than presenting exhaustive simulations, experimental analysis, or detailed code development, our goal is to motivate future work in those areas. Specifically, this paper's contributions are as follows:

- Identifying key technical barriers that could pose safety risks if left unaddressed;
- Outlining utility concerns, interconnection challenges, and potential mitigation strategies;
- Detailing regulatory hurdles, including relevant testing standards and restrictive building codes.

Our study was largely informed by twelve stakeholder interviews. Some interviewees wish to remain anonymous. In this paper, the interviewees will be referred to as follows:

- Plug-in solar company—Zoltux;
- Plug-in solar/storage company—Craftstrom;
- Plug-in solar carport company—GismoPower;
- Plug-in battery company—Mana Energy;
- Battery-integrated cooktop company—Impulse Labs;
- Non-export solar/storage company—Raya Power;
- Electrical safety officer—Lawrence Berkeley National Laboratory;
- German industry consultant—Empower Source;
- Nonprofit installer—Brightsaver;
- Eastern utility—Dominion Energy;
- Western utility—(anonymous);
- Underwriter Laboratories (UL).

The paper's sections are organized by barrier type. Section 2 details the technical barriers, including touch safety, breaker masking, and bidirectional ground-fault circuit interrupters (GFCIs). Section 3 describes the utility interconnection barriers, including device registration and power export. Finally, Section 4 details regulatory barriers associated with UL standards and the National Electrical Code (NEC).

2. Technical Barriers to Adoption of Plug-In DERs

While plug-in technology has been proven in the European market, there are several technical challenges in transitioning to the U.S. market. Three concerns, in particular, have been repeatedly highlighted as potential fire or safety risks:

- Touch-safe plugs;
- Breaker masking;
- Bidirectional GFCIs.

2.1. Touch-Safe Plugs

Touch-safe devices prevent accidental contact with energized parts or circuits, thereby minimizing the risk of electric shock. The exposed prongs of the plug could cause a shock hazard if improperly energized. Two mitigation strategies were discussed in the interviews.

First, the inverter must rapidly cut power to the AC prongs when the detected voltage deviates from the nominal range, such as when unplugged. UL 1741-compliant inverters already meet this requirement through anti-islanding, a safety feature designed to protect linemen. While the specified clearing time of two seconds ensures linemen's safety, it may be too long, allowing users to potentially touch the energized prongs after unplugging.

The U.S. standard NEMA 5-15 plugs and receptacles, shown in Figure 2, are not fully touch safe, even for loads. Figure 3 illustrates how the prongs can be energized while partially exposed, posing a shock hazard, especially for small fingers. In contrast, European Schuko receptacles, shown in Figure 2, are recessed, preventing contact with the prongs while energized. Regardless, U.S. society still considers NEMA 5-15 to be sufficiently touch-safe for household plug loads.

For NEMA 5-15 plug-in DERs to be considered touch-safe, standards bodies must define a time period after decoupling (shown in Figure 3) during which the inverter must shut off. Previous inverter testing indicates anti-islanding disconnection times typically range from 100 ms to 300 ms [24,25], though they can be as low as 40 ms [26]. The latter is more common in countries like Japan, where anti-islanding requirements are less than 0.2 s [27]. For comparison, UL 943 [28] defines trip-time requirements for ground-fault circuit interrupters (GFCIs) using the formula $T = (20/\text{mA})^{1.43}$. According to this, GFCIs must trip within 7 s for 5 mA of ground current (startling shock), 1 s for 20 mA (painful shock), and 270 ms for 50 mA (deadly shock).

Figure 2. The NEMA 5-15 receptacle (**left**), and Schuko receptacle (**right**). The Schuko receptacle is recessed into the wall, making it considerably more touch safe.

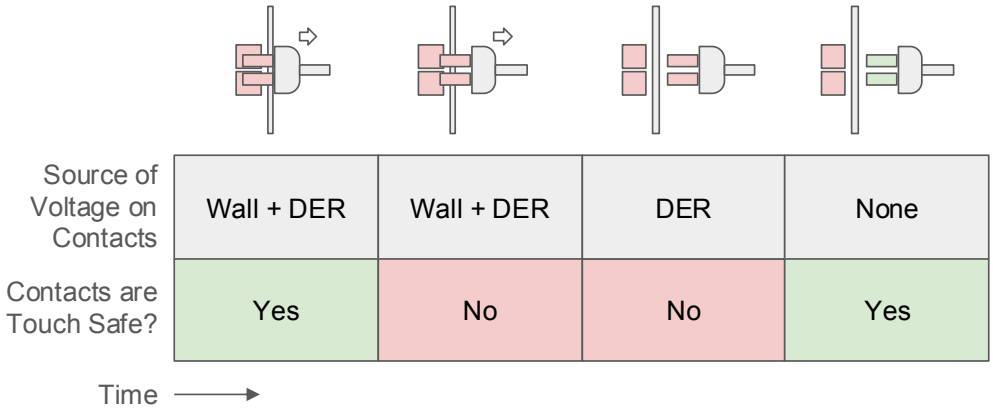

Figure 3. Timeline of unplugging. Standards will have to define the acceptable duration for the third block, when the prongs are powered only by the DER.

The second mitigation strategy involves using a sheathed and touch-safe design for the inverter plug and receptacle interface. Interviewees proposed the Wieland, Betteri, and Neutrik plugs, shown in Figure 4. With these, users would need to replace their NEMA 5-15 outlets with a compatible receptacle, an easy task for an electrician-lite. An alternative is to develop a screw-on adapter faceplate, as shown in Figure 5. While faceplate replacement technically requires an electrician, it is simple enough for most customers to handle themselves. The final alternative is to create a spring-loaded NEMA 5-15 plug, where prong sleeves extend upon unplugging. Currently, such plugs are only available in Europe and are still quite rare.

Figure 4. Several touch-safe plug options: Wieland (**left**), Betteri (**middle**), and Neutrik powerCON 32 (**right**).

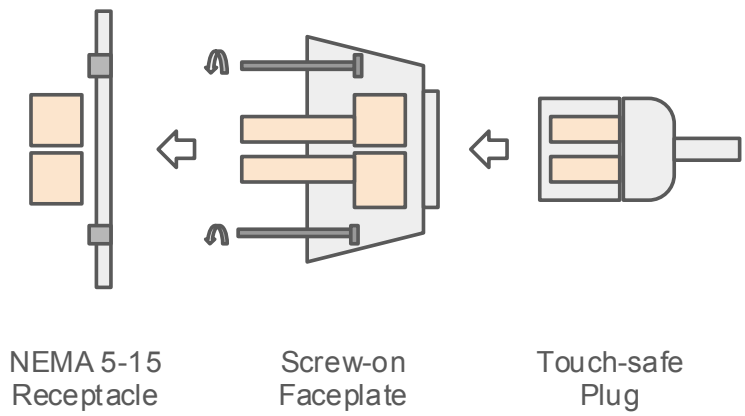

Figure 5. The non-standard plugs in Figure 4 could use a screw-on receptacle faceplate as an adapter for NEMA 5-15. Arrows indicate how devices push together (white) and screw in (grey).

2.2. Breaker Masking

Most U.S. plug-in DERs are designed for 120 V NEMA 5-15 receptacles, which are often connected in parallel on non-dedicated circuits. Backfeeding onto non-dedicated circuits can cause a technical issue known as breaker masking, where the current on a circuit can exceed the rating of the circuit's breaker. Breakers are designed to trip above a rated current as seen at the panel. When only loads are present, the breaker current is the sum of the load currents. However, plug-in DERs can effectively cancel out load current as seen by the breaker. Figure 6 illustrates a worst-case scenario, where two 14 A hair dryers operate on a 20 A circuit. In this case, 28 A flows through a section of the circuit, rapidly overheating the wire. The breaker only detects 18 A and will not trip.

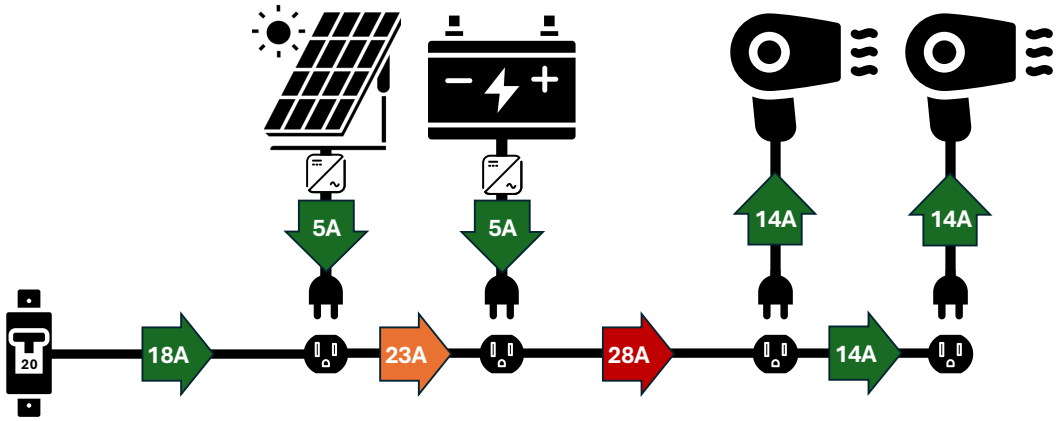

Figure 6. An illustration of the breaker masking problem. Here, the breaker does not trip despite there being 28 A on a section of the 20 A circuit.

Not all circuit configurations are problematic. As shown in Figure 7, plug-in DERs at the end of a circuit may be safe. However, we cannot expect occupants to have knowledge of their home's internal wiring.

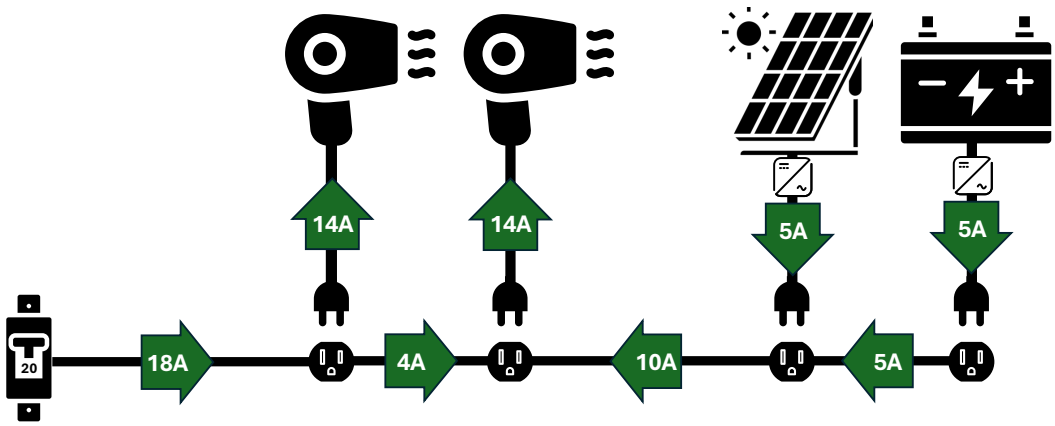

Figure 7. Plug-in DERs at the end of a branch could be acceptable, but this requires precise knowledge of the circuit.

The previously mentioned Fraunhofer study [18] suggests that overloading a circuit by 2.6 A is acceptable, setting a 600 W limit for European 230 V plug-in DERs. German experts argue that an 800 W limit is still acceptable on a 16 A residential circuit. Here, the rare worst-case scenario of a 3.5 A (i.e., 20%) overload might cause slightly faster wire degradation but would never start a fire. However, these limits are less applicable to U.S. 120 V circuits, where the same 3.5 A buffer would allow only 420 W of plug-in DERs per household.

The breaker masking issue is similar to the 120% rule for rooftop solar, outlined in NEC 705.12(B) [29]. This rule limits the sum of solar and load to 120% of the breaker panel's busbar rating. In other words, the worst-case scenario would only overload the busbar by 20%. Many argue that proper positioning of the solar breaker can prevent masking of the main breaker, safely allowing for more solar capacity. However, code-making officials established the 120% rule as a catch-all: even electricians are not expected to understand breaker masking when adding solar circuits.

The interviewees mentioned several potential technical solutions for breaker masking. The plug-in solar/storage company developed a smart outlet that disconnects attached DERs upon detecting a breaker-masking event. It precisely measures wall voltage and can detect voltage droop due to downstream loading. The German industry consultant mentioned two other solutions currently being explored in Germany. One uses a smart metering circuit breaker that communicates with the plug-in DERs. The DERs will curtail power if the sum of the metered and generated power exceeds the circuit's rating. This approach could allow up to 1800 W of generation on a lightly used 120 V, 15 A circuit. The other solution employs time-domain reflectometry to measure the load on a circuit. It sends a pulse down the line and calculates load based on the amplitude and delay of the reflection. While all three solutions could potentially resolve the breaker masking issue, they would likely require certification before gaining widespread acceptance in the U.S.

2.3. Bidirectional GFCIs

Ground-fault circuit interrupters (GFCIs) are breakers or outlets that disconnect a downstream circuit when they detect a ground fault. They typically use a Rogowski coil to sense the differential current between the hot and neutral wires. GFCIs have specific markings indicating how the line (upstream) and load (downstream) terminals should be wired. As explained in Section 4.2, the NEC has strict requirements regarding GFCI markings.

None of today's GFCIs are officially rated for bidirectional power flow, nor is there an official UL testing procedure for bidirectional GFCIs. Our UL interviewee recently conducted a series of informal backfeed tests. While most of the GFCIs functioned properly, a few samples were reportedly damaged due to backfeed. There are no other reports on the effects of backfeeding a GFCI. Future research may uncover the technical causes of the reported damage and inform GFCI designs on how to better handle backfeed. Nevertheless, the potential for GFCI damage presents a significant technical barrier to adoption in the U.S., as damaged GFCIs would fail to protect the occupant's plug-in DER and could pose a shock hazard to future occupants.

Currently, there are no officially marked bidirectional GFCIs on the market, which may require the development of a new product for the plug-in power industry to progress. An electrician-lite could easily replace a home's existing GFCI with a bidirectional one.

3. Utility Interconnection Barriers to Adoption

Utility and interconnection barriers relate to rules or regulations that may impede the installation of plug-in DERs. Ratepayers sign an electrical service agreement outlining the conditions for receiving electrical service from the grid. This agreement allows utilities to regulate what occupants connect behind the meter, leveraging the possibility of disconnecting electrical service. While debates continue over whether utilities should have authority behind the meter, most U.S. public utilities currently have such authority. Many agreements technically require notifying the utility of any changes in connected load or DERs. In practice, occupants rarely comply, and utilities typically do not enforce it.

However, many utilities reserve the right to investigate significant changes in a customer's load profile.

Ratepayers with the ability to export power must sign an interconnection agreement, which can be a lengthy and complex process, typically requiring an electrical permit. Figure 8 shows how the permitting process invokes the NEC, and Section 4.2 explains how the 2023 NEC may be unfavorable to plug-in DERs. Additionally, obtaining a permit requires the landlord's permission, adding another barrier for renters. Regardless of city approval, utilities can deny interconnection agreements that may cause technical issues. Depending on the state's public utilities commission, violating the NEC could qualify as a technical issue.

Our interviewees described several concerns utilities have regarding plug-in DERs. According to our German consultant interviewee, European utilities mainly worried about fire, safety, and liability for accidents behind the meter. Our U.S. utility interviewees expressed two very different concerns.

The interviewee from the eastern utility described their primary concern as economic. Previously, under NEM 2.0, rooftop solar could eliminate a home's electric bill, while the utility remained responsible for maintaining its service. Even with policies like NEM 3.0, the eastern utility remained uneasy about the economic impact of widespread offsetting of electrical load, particularly if plug-in solar gains popularity. Plug-in storage could help alleviate this concern. Interestingly, the western utility interviewee expressed little concern over the economic effects of plug-in DERs, especially as states transition to policies that resemble NEM 3.0.

The western utility's primary concern centers on the mobility of plug-in generation and storage. They are already facing challenges in planning for the integration of bidirectional vehicles. Their concerns include operational visibility, infrastructure planning, and the unknown impacts of mobile assets on the grid. Many large utilities grew through the acquisition of smaller municipal utilities, each with varying development practices, equipment, and voltage levels. As a result, these larger utilities tend to take a more conservative approach when planning significant changes to their networks.

It is also worth noting that neither utility interviewee was outright dismissive of plug-in DERs; both acknowledged that plug-in DERs could offer an opportunity to reduce or defer future infrastructure upgrade costs. Plug-in solar has a similar grid impact to utility-scale solar but offers the advantage of being closer to the point of use. Several studies have simulated this impact and found that widespread plug-in solar can be managed effectively with storage and smart load shifting [30,31]. Our German industry consultant noted that the marketing departments of early-adopter German utilities were excited about the business prospects and incentives for on-site generation. If plug-in batteries become widespread, utilities may see tremendous benefit through incentivized grid services and dynamic pricing.

Our non-utility interviewees collectively determined several solutions to reduce or eliminate today's interconnection barriers for plug-in DERs:

- Zero export;
- Device registration;
- State legislation;
- Interstate regulation.

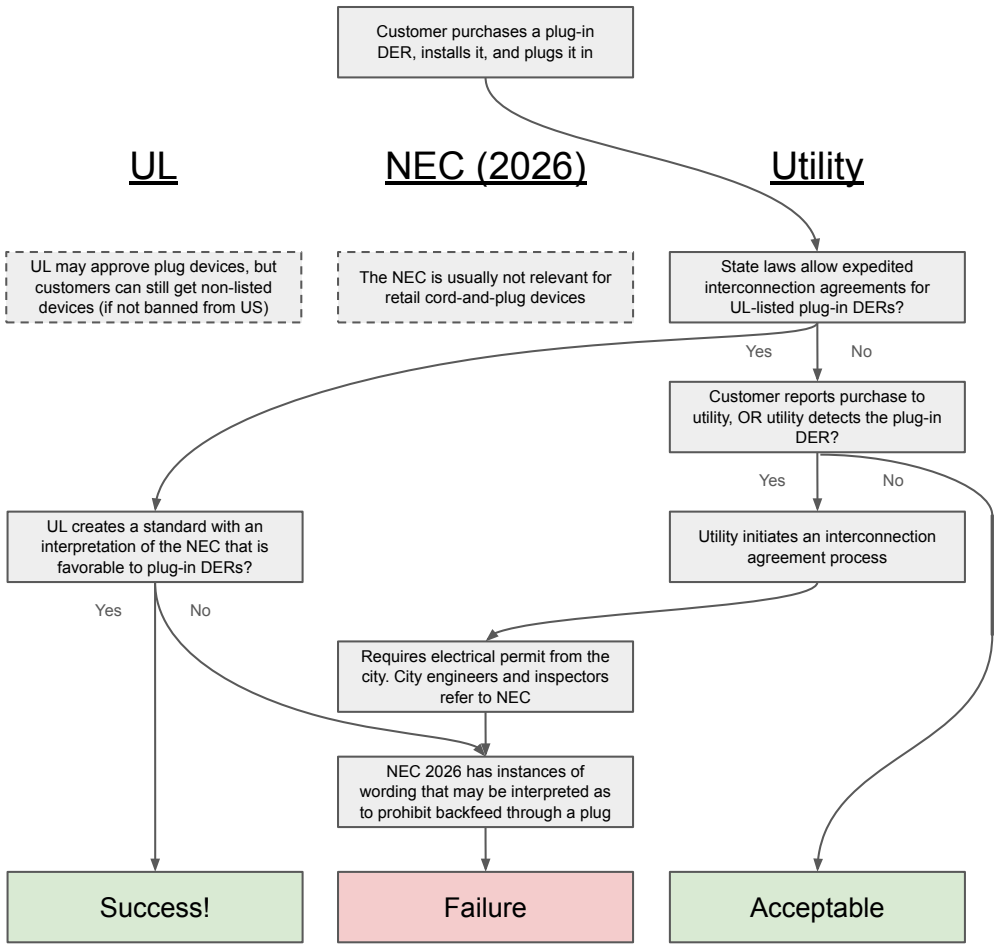

Figure 8. Regulatory flow chart illustrating the relationships between UL, the NEC, and the utility. There are several pathways to successful deployment of plug-in DERs. As of today, the NEC must be avoided.

3.1. Zero Export

Inadvertent export occurs when a building or home without an interconnection agreement exports power to the grid for more than 1 s. Rules vary by utility—some allow up to two seconds, while others permit occasional occurrences without penalty. Anecdotes from the interviews suggest that penalties also differ; some utilities are indifferent, others initiate an interconnection agreement, and some have even disconnected power without warning. Without utility approval, plug-in DERs must likely avoid export entirely.

Zero-export solutions offer a discreet workaround, enabling customers to generate and use power without exporting it. Among our interviewees, the plug-in solar/storage and battery-integrated cooktop companies described their zero-export power meters, installed behind the panel with CTs that clamp to the main feeder. The meter wirelessly communicates with plug-in DERs, typically using a long-range peer-to-peer protocol. If the feeder current drops below a set threshold, the DERs stop backfeeding within milliseconds—well under the 1 s rule. They also cease backfeeding if communication with the meter is lost.

3.2. Device Registration

The western utility raised particular concerns about mobile generation assets. Lineman safety is no longer a concern: today's anti-islanding requirements guarantee lines are not

energized during an outage. Instead, the interviewee was concerned about the challenge of understanding and modeling how mobile generation may impact their networks.

In Germany, device registration was key to utility acceptance of plug-in DERs. Today, Germany's Federal Network Agency offers a simple online form [32,33], allowing users to register devices to a specific address. This process limits legal balcony PV to 800 W, preventing the breaker masking issues in Section 2.2 and providing valuable locational data for utility network modeling. Adopting a similar system in the U.S. would likely increase utility confidence in plug-in DERs, but in return, registration should guarantee customers a free and expedited interconnection agreement.

3.3. State Legislation

Utah's HB340 [22] highlights state legislation as a potential pathway for plug-in DER adoption. As shown in Figure 8, state laws could enable customers to bypass standard utility regulations. Alternatively, state public utility commissions could rule on the inclusion of plug-in DERs, though legislation provides a stronger foundation. HB340 specifically requires applicable plug-in DERs to be UL-listed (or equivalent), making this approach dependent on a UL standard for plug-in DERs.

3.4. Interstate Regulation

The U.S. Federal Energy Regulatory Commission (FERC) regulates interstate electricity transmission and may have some authority over utilities operating across multiple states. Recent FERC orders have been favorable to small-scale DERs. FERC Order 2222 [34] allows small-scale DERs to aggregate and meet minimum requirements for participation in wholesale energy markets [35]. It also highlights several critical issues, one of which is the lack of systems and standards for two-way power flow [36]. FERC Order 2023-A [37] streamlines interconnection procedures and reduces administrative burdens for integrating DERs into grid operations [38]. Both orders aim to expand market access and participation opportunities. Although their direct impact on plug-in DERs remains uncertain, FERC orders represent a promising pathway worthy of continued investigation.

4. Regulatory Barriers to Adoption for Plug-In DERs

Codes and standards determine whether electrical devices and practices are approved by local authorities having jurisdiction (AHJs). Since AHJs can interpret them differently, it is crucial that codes and standards are written with precision. The most relevant codes and standards are the following:

- Underwriter Laboratories (UL) Standards;
- National Electrical Code (NEC);
- International Residential Code (IRC).

While AHJs regulate everything behind the outlet, they have little authority over the plug loads consumers purchase. The primary regulation for plug-in DERs comes from Nationally Recognized Testing Laboratories (NRTLs) like UL, which certify hardware through official safety listings. NRTLs test devices based on UL standards, many of which are derived from the NEC and IRC. Therefore, all three regulatory components must be considered in a barrier assessment.

4.1. UL Standards

Based on our interviews, we found several reasons companies would pursue an NRTL listing. Electricians and many non-electrician customers often look for the NRTL label on the hardware's plastic enclosure, as it indicates successful third-party safety testing by a reputable lab. This label is considered more credible than the CE marking, which only

reflects manufacturer self-testing. In addition to boosting customer confidence, the NRTL label simplifies obtaining liability insurance for a product. Finally, emerging state legislation such as HB340 [22] may only protect NRTL-listed products. Despite these benefits, some emerging plug-in DER companies are successfully selling their products without a listing, though they assume greater risk in doing so. The NRTL testing process can cost tens of thousands of dollars and may significantly delay products' time to market [39].

UL consists of three entities: the NRTL, UL Solutions; the research group, UL Research Institutes; and the body responsible for creating safety testing standards followed by many NRTLs, UL Standards and Engagement. UL Solutions offers several pathways for developing safety requirements for new technology. Their New and Innovative (N&I) process enables early certification and listing of emerging technologies, creating an Outline of Investigation (OOI), which provides interim technical requirements for products lacking an established standard and can evolve into a full standard over time. UL Standards and Engagement will publish those UL standards based on the UL Solutions OOI. As a product family matures, UL Solutions can issue a Certification Requirement Decision (CRD) to clarify or supplement existing standards relevant to that family of products. A CRD cannot change consensus requirements in a UL Standards and Engagement standard, but it can add requirements associated with the N&I process or clarifications of existing requirements. All CRDs will be simultaneously added into the consensus process to be incorporated into an existing standard or developed into a new standalone standard, both of which require a consensus vote by a standards committee. UL standards can obtain supplements, which clarify or expand specific aspects of the standard, ensuring that products are evaluated according to the most current and relevant requirements.

Based on our interviews, we have identified several UL standards that may be broadly relevant to plug-in DERs:

- UL 1741—Inverters, Converters, Controllers and Interconnection System Equipment for Use With Distributed Energy Resources. This standard outlines requirements for all inverters, including those integrated into plug-in DERs. It includes rapid shut-off requirements in Supplement B, and upcoming requirements for movable inverters and bidirectional vehicle chargers in Supplement C. UL 1741 might need to be updated with provisions for flexible cord and plug connections.
- UL 943—Ground-Fault Circuit-Interrupters. This standard outlines the technical and testing requirements for GFCIs, and will need to be updated with guidelines for testing and marking bidirectional GFCI breakers and outlets.
- UL 3141—Power Control Systems. This standard is relevant to plug-in DERs that involve meters and utility export control. Zero-export systems can be listed under this standard.
- UL 3741—ANSI/CAN/UL Photovoltaic Hazard Control. This standard outlines rapid shutdown requirements for the DC side of a PV inverter. While rapid shutdown is typically required for rooftop solar to ensure firefighter safety, its necessity for balcony solar is yet to be determined.
- UL 9540—Energy Storage Systems (ESS) and Equipment. This system-level listing applies only to stationary energy storage systems like the Powerwall. However, the IRC and NEC currently classify any battery-containing device as an ESS, imposing strict usage restrictions. Thus, plug-in DERs with storage must avoid UL 9540 as their system-level listing.
- UL 1973—Batteries for Use in Stationary and Motive Auxiliary Power Applications. This is an alternative system-level standard for stationary battery products that would not classify them as an ESS.

We also list several UL standards that were highly relevant to several of our interviewees:

- UL 858—Household Electric Ranges. This system-level standard defines requirements and testing procedures for stoves, ovens, and ranges. The proposed Supplement C would permit these appliances to include a battery and allow their classification as appliances rather than ESSs under the NEC and IRC.
- UL 2595—General Requirements for Battery-Powered Appliances. This standard will be referenced in the proposed UL 858 SC, and is completely detached from UL 9540.
- UL 9741—Electric Vehicle Power Export Equipment (EVPE). This system-level listing is necessary for bidirectional EV chargers. It currently requires a hardwired connection, thus disqualifying the bidirectional charging of a plug-in DER.
- UL 414—Meter Sockets. A standard for meter sockets, which is one of the first to allow plug-in DERs.

This list is not exhaustive but generally provides information on what may form the basis of an eventual plug-in DER standard.

4.2. National Electrical Code

The NEC is Code 70 of the National Fire Protection Agency (NFPA) and governs the rules and regulations for power distribution in homes and buildings [29]. It serves as the foundation for each state's electrical codes, which electricians and inspectors refer to when designing and inspecting electrical work. The NEC is updated every three years and includes a process where an appointed code-making panel accepts or rejects public input. Electrical codes play a critical role in fire and shock safety, thus changes tend to be slow and conservative.

While the NEC generally does not regulate plug loads, its rules can significantly impact the ability of plug-in DERs to source or sink power. As shown in Figure 8, interconnection agreements often require permits and inspections, during which the NEC is referenced. UL standards also frequently reference the NEC. We have listed several 2023 NEC articles that are highly relevant to the plug-in DER industry. Many NEC barriers arise from vague wording or informal notes, which AHJs may interpret at their discretion. While UL standards almost never contradict the NEC, they can definitely help clarify vague or ambiguous language.

NEC Articles 690 and 705 govern the connection of an inverter's AC side to a home. These articles are largely similar, and our solar carport interviewee described several instances of rejection due to their application [40]. Article 690's scope broadly covers "solar PV systems", while Article 705 applies broadly to grid-following inverter systems. Though these articles are intended for rooftop solar installations, AHJs will quite likely apply them to plug-in DERs. For instance, our electrical safety officer interviewee highlighted NEC 705.12, which governs load-side source connections, as lacking any provisions for connection via plug and receptacle. In general, the lack of explicit provisions often leads to rejection by default. Both articles define acceptable means for disconnecting AC power (690.13 and 705.20); unplugging is not mentioned, giving grounds for denial. Additionally, both articles require installation by "qualified persons" (690.4 and 705.8). Although Article 100 does not explicitly define "qualified persons" as licensed electricians, our interviewee's experience indicates it is often interpreted this way.

Article 406 covers receptacles, cord connectors, and attachment plugs, with a focus on receptacles. Our electrical safety officer interviewee mentioned that NEC 406.7(B) prohibits receptacles that require an energized plug as their source of power. While this provision should not apply to plug-in DERs, AHJs may interpret it as prohibiting energized plugs altogether.

Article 400 of the NEC governs the use of flexible cords and cables and is one of the few sections that directly relates to plug loads. Flexible cord or cable is generally defined

as having a stranded wire core. NEC 400.10(A) outlines permissible uses, which includes appliances. However, whether plug-in DERs qualify as appliances is subject to the AHJ. NEC 400.10(B) requires appliances to be energized via an outlet or a cord connector body, the latter of which might apply to plug-in DERs. However, NEC 400.12 prohibits flexible cords from running through windows, walls, being attached to the building, or routed in areas prone to physical damage. These prohibitions may cause interpretation challenges.

It is also important to note that NEC 110.3(B) generally requires equipment to be used in accordance with its labeling and instructions. Our solar carport interviewee pointed out that this could pose a problem for plug-in DERs utilizing off-the-shelf inverters, as these inverters often lack explicit instructions permitting use with backfeeding plugs.

Article 210.8 introduces GFCIs and specifies where GFCI protection is required. In general, GFCI breakers or outlets must protect accessible circuits in wet locations, where ground faults are particularly dangerous. Plug-in DERs may use outdoor, kitchen, or garage outlets, all of which require GFCI protection per Article 210. Therefore, the lack of bidirectional GFCIs is a significant barrier to code compliance and the safety of plug-in DERs. Article 625.54 states that cord-and-plug electric vehicle service equipment (EVSE) must be supplied through a GFCI-protected outlet. Without bidirectional GFCIs, cord-and-plug bidirectional vehicle chargers may never be possible.

Article 422.5 specifies which appliances require GFCI protection, including both hard-wired and cord-and-plug types. Several types of GFCIs are allowed, including breakers, outlets, and even device-integrated models. While 422.5 does not require GFCIs for cooking appliances, 210.8(D) does. The NEC correlating committee is currently investigating this contradiction and will determine which of the lists in 210.8 or 422.5 will take priority.

Our solar carport interviewee proposed bidirectional EVSE as a potential pathway for plug-in DERs, backfeeding via an automotive plug. We have identified two NEC barriers to this strategy. First, the NEC defines vehicles in Article 100 explicitly as automotive vehicles and includes an informal note stating that other vehicles, such as forklifts, are excluded from the guidelines for bidirectional vehicles. Ultimately, it is up to UL to decide whether "non-vehicles" can backfeed through "vehicle" plug formats.

Another EVSE barrier lies in the wording of Article 625.44 on EVSE connections. It states that "fixed in place" equipment must be hardwired, and Article 100 defines "fixed in place" as anything that requires a tool for removal. Many cord-and-plug EVSE models are mounted with a tool, as are most plug-in solar panels. The NEC allows plugs on equipment that uses (less-secure) hand fasteners, which it considers as "fastened-in-place". Additionally, 625.44 explicitly specifies that only "non-locking" receptacles are permitted for fastened-in-place equipment. Such language technically prohibits connectors such as Wieland, Betteri, or Neutrik on the receptacle side of an EVSE.

4.3. International Residential Code

The International Residential Code (IRC) is a set of building codes for residential structures, including electrical systems [41]. The relationship between the NEC and the electrical chapters of the IRC can be confusing. Technically, inspectors are supposed to defer to the IRC in the event of an explicit discrepancy. More often than not, the IRC and NEC do not conflict, and inspectors follow the NEC due to its stricter guidelines. The electrical sections of the IRC are written by the NFPA but are often a decade behind the NEC. States often have their own electrical codes, which are based on a combination of the NEC and IRC.

The International Fire Code (IFC) [42] is a sister code to the IRC and International Building Code (IBC). State electrical codes often defer to the IFC in the same way they do the IRC. IFC 1207 is the only article that addresses energy storage in multifamily housing.

According to our battery-integrated cooktop interviewee, no codes govern storage of <20 kWh per fire area. As a result, inspectors must refer to the guidelines in IFC 1207 for >20 kWh of battery storage, which in turn references NFPA 855's rules and regulations on the installation and operation of an ESS. While these strict rules ensure safety for an ESS of any size, they make no distinction between an ESS and a regular battery. Batteries are being integrated into a wide variety of non-ESS products, and the regulations in NFPA 855 make installing these products prohibitively burdensome. In response, code officials are developing NFPA 800, which will regulate non-ESS devices with smaller batteries, such as battery-integrated induction stoves. Eventually, IFC 1207 could refer to NFPA 800 for <20 kWh of storage. Until then, deployment of non-ESS devices may need to rely on certain exceptions within NFPA 855, possibly using UL 9540 certification or limiting the energy capacity installed per defined fire area.

The IRC also presents a major challenge for battery-integrated plug loads, as IRC 330 prohibits ESSs in habitable spaces, including kitchens, where cooktops and ranges with integrated batteries would be installed. The IRC also fails to distinguish between a battery and an ESS. Most AHJs recognize that this rule is outdated; banning laptops from indoor spaces simply because they contain a battery would be unreasonable. As a result, many AHJs defer to the NFPA on how to regulate battery-integrated appliances. These products should ideally fall under the scopes of NFPA 800 and UL 1973 (for batteries), rather than NFPA 855 and UL 9540 (for ESSs). However, if the latter applies, there is a vague exception that allows devices in accordance with UL 9540 and marked "for use in residential dwelling units". Since UL 9540 does not actually define such a marking, the exact meaning or intent of this exception remains unclear. In general, such ambiguities are less than ideal, as they encourage arbitrary interpretation by AHJs.

5. Conclusions and Future Work

While plug-in DERs have demonstrated significant economic benefits for European homeowners and renters, their adoption in the U.S. has faced several barriers. In this paper, we outline key technical challenges, including touch safety, breaker masking, and the lack of bidirectional GFCIs. We then discuss utility concerns and strategies companies have used to navigate interconnection. Finally, we examine regulatory pathways involving UL standards and the NEC.

We find plug-in DERs to have several viable market pathways today, including approaches that use zero-export technology to enable installation without an interconnection agreement. However, key technical issues remain that could pose fire and safety risks, highlighting the need for a new UL standard to test plug-in DERs. While UL standards cannot override the NEC, the most problematic NEC provisions appear to stem from interpretation rather than explicit prohibitions, suggesting that a new UL standard is feasible.

Future work should target the barriers outlined in this paper. Touch safety may be resolved through rigorous testing and a standardized inverter shut-off duration. Breaker masking solutions will require worst-case scenario testing and eventual inclusion in a UL standard. An eventual UL standard for bidirectional GFCIs will enable manufacturers to produce compliant devices. While it is possible to navigate interconnection barriers today, Germany has shown that persistent education and outreach can lead to widespread utility acceptance. Ultimately, a UL standard tailored to plug-in DERs will be essential to overcoming many of the remaining regulatory hurdles.

Author Contributions: Conceptualization, D.L.G.; methodology, D.L.G. and J.S.; formal analysis, D.L.G., A.G.-K. and L.S.; investigation, D.L.G., J.S., A.G.-K., L.S. and A.M.; resources, D.L.G. and A.M.; data curation, D.L.G., J.S. and A.M.; writing—original draft preparation, D.L.G.; writing—review and editing, A.G.-K., L.S., J.S. and A.M.; visualization, D.L.G.; supervision, A.M.; project administration, D.L.G. and A.M.; funding acquisition, A.M. All authors have read and agreed to the published version of the manuscript.

Funding: This research and the APC was funded by U.S. Department of Energy (DOE) grant number DE-AC02-05CH11231.

Data Availability Statement: The original contributions presented in the study are included in the article, further inquiries can be directed to the corresponding author.

Acknowledgments: This work was authored by Lawrence Berkeley National Laboratory, operated for the U.S. Department of Energy (DOE) under Contract No. DE-AC02-05CH11231. Funding was provided by the DOE Assistant Secretary for Energy Efficiency and Renewable Energy Building Technologies Office Emerging Technologies Program. Research funding to GismoPower was provided under DOE contract DE-SC0022708 by the DOE Solar Energy Technologies Office (SETO). The views expressed in the article do not necessarily represent the views of the DOE or the U.S. Government. The authors would like to offer their gratitude to the stakeholder interviewees whose knowledge and expertise made this article possible. In particular, special thanks to Christian Ofenheusle for all the information and updates on the European front. The authors would like to thank other team members and collaborators who have participated in related work to further the industry. Finally, the authors give thanks to the journal editor and reviewers.

Conflicts of Interest: Author Achim Ginsberg-Klemmt was employed by the company GismoPower LLC. The remaining authors declare that the research was conducted in the absence of any commercial or financial relationships that could be construed as a potential conflict of interest.

References

1. Wood Mackenzie. New NEM 3.0 Provisions 'Will Cut California Solar Market in Half by 2024'. Available online: https://www.woodmac.com/press-releases/nem-3.0-pd-will-cut-california-solar-market-in-half-by-2024/ (accessed on 5 March 2025).
2. Feldman, D.; Zuboy, J.; Dummit, K.; Stright, D.; Heine, M.; Mirletz, H.; Margolis, R. *Winter 2024 Solar Industry Update*; Technical Report; National Renewable Energy Laboratory (NREL): Golden, CO, USA, 2024.
3. Lithium-Ion Battery Pack Prices Rise for First Time to an Average of $151/kWh. BloombergNEF. Available online: https://about.bnef.com/blog/lithium-ion-battery-pack-prices-rise-for-first-time-to-anaverage-of-151-kwh/ (accessed on 9 February 2023).
4. California Public Utilities Commission. Decision Adopting Net Energy Metering Successor Program and Tariff. 2022. Available online: https://www.cpuc.ca.gov/industries-and-topics/electrical-energy/renewable-energy/Net-Energy-Metering (accessed on 5 March 2025).
5. California Solar & Storage Association. *Impact of NEM-3 on California's Renewable Energy Progress and Solar Jobs*; Technical Report; California Solar & Storage Association: Sacramento, CA, USA, 2023.
6. Hammerle, M.; White, L.V.; Sturmberg, B. Solar for renters: Investigating investor perspectives of barriers and policies. *Energy Policy* **2023**, *174*, 113417. [CrossRef]
7. Keslinke, A.G. Cocreating Property Value and Energy Justice: A Framework to Leverage Investor Self-Interest to Overcome the Renewable Energy Split-Incentive in Rental Property. Master's Thesis, Harvard University, Cambridge, MA, USA, 2024.
8. Ramasamy, V.; Zuboy, J.; Woodhouse, M.; O'Shaughnessy, E.; Feldman, D.; Desai, J.; Walker, A.; Margolis, R.; Basore, P. *Us Solar Photovoltaic System and Energy Storage Cost Benchmarks, with Minimum Sustainable Price Analysis: Q1 2023*; Technical Report, National Renewable Energy Laboratory (NREL): Golden, CO, USA, 2023.
9. Gerber, D.L.; Nordman, B.; Brown, R.; Poon, J. Cost analysis of distributed storage in AC and DC microgrids. *Appl. Energy* **2023**, *344*, 121218. [CrossRef]
10. European Commission. Photovoltaic Geographical Information System (PVGIS). 2025. Available online: https://ec.europa.eu/jrc/en/pvgis (accessed on 5 March 2025).
11. Plugin Solar. Available online: https://plugin-solar.eu/ (accessed on 5 March 2025).
12. Seme, S.; Strojanšek, L.; Simonič, E.; Sredenšek, K. Balcony Solar Photovoltaic Plug-And-Play Systems. Available online: https://www.icrepq.com/icrepq24/422-24-seme.pdf (accessed on 13 March 2025).

13. Mundada, A.S.; Prehoda, E.W.; Pearce, J.M. US market for solar photovoltaic plug-and-play systems. *Renew. Energy* **2017**, *103*, 255–264. [CrossRef]
14. The Guardian. 'If 1.5 m Germans Have Them There Must Be Something in It': How Balcony Solar Is Taking Off. 2024. Available online: https://www.theguardian.com/environment/2024/dec/18/if-a-million-germans-have-them-there-must-be-something-in-it-how-balcony-solar-is-taking-off (accessed on 6 March 2025).
15. Hanley, S. Germany Embraces Balkonkraftwerke—Balcony Solar For Apartments—CleanTechnica. 2024. Available online: https://cleantechnica.com/2024/12/21/germany-embraces-balkonkraftwerke-balcony-solar-for-apartments/ (accessed on 6 March 2025).
16. *VDE V 0100-551-1*; Low-Voltage Electrical Installations—Part 5-51: Selection and Erection of Electrical Equipment—Common Rules. VDE Verlag: Berlin, Germany, 2023.
17. *VDE-AR-N 4105:2018-11*; Technical Requirements for the Connection and Operation of Customer Installations to the Low Voltage Network. VDE–Verband der Elektrotechnik Elektronik Informationstechnik e.V.: Berlin, Germany, 2018.
18. Erge, T.; Laukamp, H.; Diazgranados, L.M.; Armbruster, A.; Fischer, D. *Steckerfertige, Netzgekoppelte Kleinst-PV-Anlagen: Studie für E-Control Austria*; Technical Report; Fraunhofer-Institut für Solare Energiesysteme ISE: Freiburg im Breisgau, Germany, 2016.
19. European Commission. Commission Regulation (EU) 2016/631 of 14 April 2016 Establishing a Network Code on Requirements for Generators. *Off. J. Eur. Union* **2016**, *L 112*, 1–68. Available online: https://eur-lex.europa.eu/legal-content/EN/TXT/?uri=CELEX%3A32016R0631 (accessed on 7 March 2025).
20. SolarPower Europe. *Plug-In Solar PV: Solar for All—A Deep-Dive on a Fast-Emerging PV Segment*; Technical Report; SolarPower Europe: Brussels, Belgium, 2025.
21. Mundada, A.S.; Nilsiam, Y.; Pearce, J.M. A review of technical requirements for plug-and-play solar photovoltaic microinverter systems in the United States. *Sol. Energy* **2016**, *135*, 455–470. [CrossRef]
22. HB0340. Available online: https://le.utah.gov/~2025/bills/static/HB0340.html (accessed on 6 March 2025).
23. Weaver, J.F. Balcony Solar Gains Unanimous Bipartisan Support in Utah—pv Magazine USA, 2025. Available online: https://pv-magazine-usa.com/2025/03/05/balcony-solar-gains-unanimous-bipartisan-support-in-utah/ (accessed on 7 April 2025).
24. Jeykishan Kumar, K. Automated Disconnection Time for Inverter Island Testing. Available online: https://dewesoft.com/blog/automated-disconnection-time-for-inverter-island-testing (accessed on 7 March 2025).
25. Hoke, A.; Nelson, A.; Miller, B.; Chakraborty, S.; Bell, F.; McCarty, M. *Experimental Evaluation Oo Pv Inverter Anti-Islanding with Grid Support Functions in Multi-Inverter Island Scenarios*; Technical Report; National Renewable Energy Lab. (NREL): Golden, CO, USA, 2016.
26. Ellis, A.; Gonzalez, S.; Miyamoto, Y.; Ropp, M.; Schutz, D.; Sato, T. Comparative analysis of anti-islanding requirements and test procedures in the United States and Japan. In Proceedings of the 2013 IEEE 39th Photovoltaic Specialists Conference (PVSC), Tampa, FL, USA, 16–21 June 2013; IEEE: Piscataway, NJ, USA, 2013; pp. 3134–3140.
27. *Individual Test Method of Grid-connected Protective Equipment etc., for Multi-Unit Grid-Xonnected PV Power Generating Systems*; Technical Report JETGR0003-4-1.0; Japan Electrical Safety & Environment Technology Laboratories (JET): Tokyo, Japan, 2011. (In Japanese)
28. Underwriters Laboratories. *UL 943*; Standard for Ground-Fault Circuit Interrupters; Underwriters Laboratories: Northbrook, IL, USA, 2017.
29. National Fire Protection Association (NFPA). *NFPA 70: National Electrical Code (NEC)*, 2023 ed.; National Fire Protection Association: Quincy, MA, USA, 2023.
30. Ye, K.; Kim, H.; Lu, N. Mobile Electric Generating Appliance (MEGA) Impact Analysis, 2023. Available online: https://drive.google.com/file/d/1xeYstAGyeK_6htZRUaLdWus5Uo--vofE/view?usp=sharing (accessed on 10 March 2025).
31. Teyber, A.; Cezar, G.V. Gismo Power Impact Analysis, 2025. Available online: https://drive.google.com/file/d/1WAno_YiIrHRt_LD5md3Oz_url8VLJpW7/view?usp=sharing (accessed on 10 March 2025).
32. MaStR. Welcome to the Market Data Register. Available online: https://www.marktstammdatenregister.de/MaStR (accessed on 12 March 2025).
33. Zurie, Q. Germany's Simplified Balcony Solar System Registration Process Explain—SUNSHARE. 2024. Available online: https://sunsharetek.com/blogs/government-policies/germany-s-simplified-balcony-solar-system-registration-process-explained (accessed on 12 March 2025).
34. Federal Energy Regulatory Commission. Participation of Distributed Energy Resource Aggregations in Markets Operated by Regional Transmission Organizations and Independent System Operators. 2020. Available online: https://www.federalregister.gov/documents/2021/03/30/2021-06089/participation-of-distributed-energy-resource-aggregations-in-markets-operated-by-regional (accessed on 17 March 2025).
35. Federal Energy Regulatory Commission. FERC Order No. 2222: Fact Sheet. Available online: https://www.ferc.gov/media/ferc-order-no-2222-fact-sheet (accessed on 17 March 2025).

36. Electricity Advisory Committee. FERC Order 2222 Recommendations for the U.S. Department of Energy—Outline. 2021. Available online: https://www.energy.gov/sites/default/files/2021-04EAC%20FERC%20Order%202222%20Recommendations%202021-04-15_finalDraft.pdf (accessed on 19 March 2025).
37. Federal Energy Regulatory Commission. Order No. 2023-A: Revisions to Generator Interconnection Procedures and Agreements. 2024. Available online: https://www.ferc.gov/electric-transmission/generator-interconnection/final-rules-establishing-and-revising-standard (accessed on 17 March 2025).
38. Federal Energy Regulatory Commission. Explainer on the Interconnection Final Rule. Available online: https://www.ferc.gov/explainer-interconnection-final-rule (accessed on 17 March 2025).
39. IEEE USA Board of Directors. Testing Reciprocity by National Recognized Testing Laboratories (NRTLs). Available online: https://globalpolicy.ieee.org/wp-content/uploads/2018/03/IEEE18004.pdf (accessed on 17 March 2025).
40. Ginsberg-Klemmt, A. *Research Performance Progress Report 1: The MEGA: Cost-Effective Plug-in Portable Solar Electricity for Lower to-Moderate Income Homes and Small Businesses*; Technical Report DE-SC0022708; U.S. Department of Energy: Washington, DC, USA, 2023.
41. International Code Council. *2021 International Residential Code for One- and Two-Family Dwellings*; International Code Council: Washington, DC, USA, 2021.
42. International Code Council. *2021 International Fire Code*; International Code Council: Washington, DC, USA, 2021.

Disclaimer/Publisher's Note: The statements, opinions and data contained in all publications are solely those of the individual author(s) and contributor(s) and not of MDPI and/or the editor(s). MDPI and/or the editor(s) disclaim responsibility for any injury to people or property resulting from any ideas, methods, instructions or products referred to in the content.

POLICY AND SAFETY ANALYSIS

DISPROPORTIONATE REGULATION OF RESIDENTIAL PLUG-IN SOLAR

A comparative risk analysis of plug-in solar units with certified microinverters vs. portable gas or diesel generators for lineworker safety

Southern Alliance for Clean Energy (SACE)
By Dr. Stephen A. Smith and Amanda Arthur

V.7.1 | June 2026

EXECUTIVE SUMMARY

This white paper examines the scientific and regulatory basis for the differential treatment of residential plug-in solar photovoltaic (PIPV) units and portable gas/diesel generators with respect to lineworker safety. Drawing on documented fatality records from the Occupational Safety and Health Administration (OSHA) and the National Institute for Occupational Safety and Health (NIOSH), peer-reviewed electrical injury science, utility industry safety publications, applicable federal inverter safety standards, a U.S. Department of Energy (DOE) funded national laboratory barrier analysis, and the emerging bipartisan legislative consensus in multiple states, this analysis reaches the following central conclusions:

- **A DOE-funded Lawrence Berkeley National Laboratory study (2025) systematically catalogued the technical, interconnection, and regulatory barriers** to plug-in solar adoption in the United States, confirming that interconnection requirements—not technical safety limitations—are the primary barrier to deployment [1].
- **Anti-islanding protection mandated for inverters by UL 1741 (Clause 9.3) and IEEE 1547-2018 provides automatic disconnection within 2 seconds when grid power fails**—a protection that portable generators entirely lack. This protection operates independently of homeowner knowledge, behavior, or compliance. In practice, modern microinverters used in plug-in solar systems disconnect well within this 2-second ceiling: international standards already require shutdown times as fast as 0.2 seconds, and most microinverters on the market today disengage in under one second, significantly outperforming the UL 1741 standard [2], [3].
- **Peer-reviewed risk quantification studies place the annual probability of lineworker electric shock from residential solar islanding at less than one in one billion per year** under worst-case scenarios. An International Energy Agency study concluded this risk is three orders of magnitude lower than the baseline electrical hazards already present in utility operations. The study is often cited as evidence that anti-islanding protections built into PV inverters limit risk [4], [5].
- **Documented lineworker fatalities from backfeed are attributable exclusively to portable generators.** OSHA and NIOSH case records confirm multiple deaths, and the specific kill mechanism—transformer voltage step-up from sustained generator backfeed—has been directly observed and documented in the field [6], [7], [8], [9].
- **No lineworker has ever been killed or injured by backfeed from a UL 1741-certified grid-tied solar inverter.** The utility industry's own trade safety publication, *Incident Prevention*, confirms this record explicitly, stating that certified inverters have been "virtually 100 percent reliable" with no known lineworker injuries from inverter-failure-associated backfeed [10].
- **Bipartisan legislative momentum to exempt plug-in solar from utility interconnection requirements is accelerating.** Utah enacted HB 340 unanimously in March 2025, becoming the first state to adopt plug-in solar legislation [11]. Virginia's General Assembly passed SB 250/HB 395 with overwhelming bipartisan support in March 2026 [12]. As of June 1, 2026, 35 states and Washington, D.C. have introduced plug-in solar

legislation, including nine states that have passed legislation: Colorado, Connecticut, Maine, Maryland, New Hampshire, New York, Utah, Vermont, and Virginia [13].

- **Policy recommendations:**
  (1) a risk-tiered interconnection framework based on system size and certification status:
  (1a) **Sub-420W with UL 1741-certified microinverters**: exempt from all interconnection requirements, utility agreements, fees, and inspections. At 420 watts, a plug-in solar system produces no more than 3.5 amps at 120 volts—the same safety buffer used in Germany for 800W systems on 230V circuits—which eliminates any breaker-masking risk on standard 15- or 20-amp household circuits, even in worst-case wiring configuration.
  (1b) **420W–2,400W with UL 1741-certified microinverters**: system registration with the utility; no physical inspection required. Systems in this range remain within the rated capacity of standard 20-amp household circuits but may require breaker-masking protections (such as a UL 3141-certified Power Control System, a panel-installed circuit-monitoring device, or installation on a dedicated circuit) depending on the wiring configuration.
  (1c) **Over 2,400W, or any system without UL 1741-certified microinverters**: may warrant more robust interconnection review consistent with current rules.
  (2) **Equivalent regulatory treatment of portable generators** if lineworker safety is asserted as the basis for solar interconnection requirements.
  (3) **Evidence-based regulatory review** by state public utility commissions, including evaluation of whether external disconnect switch requirements remain justified for certified systems.
  (4) **Transparency in rulemaking**, requiring utilities to provide specific, technically documented safety justifications for any plug-in solar interconnection requirements.

The core finding: Plug-in solar—the technology with zero documented lineworker deaths—faces heavier regulation than the technology with confirmed fatalities. This regulatory inversion demands correction.

A critical clarification: This paper does not argue that plug-in solar presents zero theoretical risk to lineworkers. Any source of electrical energy connected to a distribution system has the potential, however remote, to contribute to hazardous conditions. The evidence demonstrates that:

(1) UL 1741-certified inverters provide automatic, hardware-based protections that reduce the practical risk to levels indistinguishable from zero;

(2) portable generators lack any equivalent automatic protection and have a confirmed lethal track record; and

(3) the current regulatory framework imposes greater burdens on the technology with superior safety performance, an inversion that cannot be justified on safety grounds.

1. BACKGROUND: THE REGULATORY DISPARITY

KEY DEFINITIONS: BACKFEEDING VS. SHARING

Throughout this paper, the term **backfeeding** refers specifically to the flow of electric power from a residence back onto the utility distribution grid **during a grid outage**, when utility workers may be performing maintenance or repair on lines they expect to be de-energized. This is the condition that creates a lineworker safety hazard: power flowing onto a line that is assumed to be dead. The backfeed risk is determined by whether a generation source can sustain energization of the distribution line through the service transformer during an outage, and whether the source disconnects automatically when grid power is lost.

When a grid-tied solar system sends excess power back to the utility while the grid is operating normally, in our definition, that is not backfeeding in the safety-relevant sense used in this paper. In normal grid operation, the grid sets the voltage and frequency, and any power exported by a residential system flows onto an energized, regulated network where lineworkers are already protected by standard live-line procedures. SACE refers to this normal-operation power export as **sharing**.

Sharing is distinct from **net metering** or other utility compensation arrangements. A homeowner who has a contractual agreement with their utility to receive credit or payment for exported power is participating in a formal interconnection program, not simply sharing. This paper's use of the term sharing refers specifically to the incidental export of power by a grid-tied solar system that is not in a contractual relationship with the utility to receive compensation for that power. The safety analysis in this paper addresses only the outage-condition backfeed scenario, which is the basis for lineworker safety concerns about distributed generation.

Note on certification references: Throughout this paper, references to "UL 1741" denote the technical standard itself—not exclusively products bearing the UL mark. Any product certified to UL 1741 by an OSHA-recognized Nationally Recognized Testing Laboratory (NRTL), including Intertek (ETL), CSA Group, TÜV Rheinland, and others, meets the same safety requirements. Unless otherwise noted, "UL 1741-certified" should be read as "certified to UL 1741 by any recognized NRTL" (see Section 6.3).

1.1 HOW PORTABLE GENERATORS ARE REGULATED

Portable gas and diesel generators are sold freely at hardware and home improvement stores across the United States without any pre-purchase utility notification, permit requirement, or interconnection agreement. A homeowner may purchase a generator of any wattage—commonly 2,000 to 7,500 watts for residential use—and operate it with minimal regulatory oversight. The principal safety requirement governing residential generator use is that the unit must not be connected to household wiring without an approved transfer switch or other approved interconnection equipment, per the National Electrical Code (NEC) Article 702.5(A) (NFPA 70-2023, Chapter 7). Article 702 specifically requires transfer equipment to prevent simultaneous

connection of the utility service and the standby source—a provision designed to prevent hazardous backfeed conditions that could energize utility lines during outages and to protect lineworkers from backfeed [14].

However, enforcement of this requirement is largely reactive—violations are investigated only after an incident occurs, and many homeowners routinely bypass transfer switches using direct-plug "suicide cords." A "suicide cord" (also called a backfeed cord or cheater cord) is a power cord with male prongs on both ends, used to connect a portable generator directly to a wall outlet—bypassing the transfer switch required by the NEC—and thereby energizing the entire household circuit and potentially the distribution line.

Critically, NEC Article 702 contains no requirement for automatic anti-islanding protection equivalent to what UL 1741 mandates for solar inverters. Generator safety depends on correct installation and user compliance with transfer equipment requirements [14].

The Electrical Safety Foundation International (ESFI), compiling U.S. Bureau of Labor Statistics and OSHA data from 2011 through 2023, reports an average of approximately 150 electrical fatalities per year across all industries; contact with or exposure to electricity remaining one of the leading causes of workplace fatalities in the United States [15].

Despite this record, the regulatory framework governing portable generator use at the residential level is characterized by minimal pre-installation oversight and limited utility involvement.

1.2 HOW PLUG-IN SOLAR IS REGULATED

In contrast, small plug-in solar photovoltaic (PIPV) units—including balcony-mounted panels, window units, and plug-in microinverter systems typically ranging from 200 to 2,400 watts—are subject to a substantially heavier regulatory environment in most U.S. jurisdictions. At the national code level, grid-interactive power sources such as rooftop and plug-in solar must comply with NEC Article 705, which governs electric power sources operating in parallel with the utility grid. Article 705.2 requires such equipment be listed and evaluated for safe interconnection, typically through certification to UL 1741, which mandates automatic anti-islanding protection that disconnects generation when grid power is lost—without requiring any action from the homeowner—preventing the re-energization of utility lines and protecting lineworkers during outages [14].

A 2025 DOE-funded study by Lawrence Berkeley National Laboratory (LBNL) systematically documented the regulatory barriers facing plug-in solar in the United States, finding that regulatory and interconnection requirements—not technical safety issues—represent the primary obstacle to deployment [1]. The report further notes that these requirements are often identical to those applied to multi-kilowatt rooftop PV systems, despite plug-in units typically producing only a few hundred watts.

In many utility territories in the U.S., connecting such a unit to a residential outlet or household circuit requires:

- A formal interconnection application to the serving utility
- Utility technical review, which may take weeks to months
- A signed interconnection agreement
- In some cases, an electrical inspection and permit
- In some cases, installation of an external disconnect switch
- Ongoing utility approval that can be denied, delayed, or conditioned without clear technical justification

This framework mirrors the requirements applied to large-scale rooftop solar systems of 5 to 20 kilowatts or more, despite the fact that a 400-watt plug-in unit produces roughly one-quarter the power of a single hair dryer on its lowest setting (a typical hair dryer draws 1,500 to 1,875 watts) and is a fraction of the wattage of gasoline or diesel generators sold without any such requirements. (It is worth noting that solar generation is a continuous load under NEC definitions, running for more than three hours, and therefore subject to the 80% derating rule under NEC Article 210. A 400-watt continuous solar load is well within this derated capacity on any standard 15- or 20-amp household circuit.)

1.3 THE REGULATORY QUESTION

The central question this paper addresses is whether the safety evidence supports this regulatory disparity. Specifically: **do sub-2,400-watt plug-in solar units with UL 1741-certified microinverters present a comparable or greater lineworker safety risk than portable generators of equivalent or greater wattage?**

As the evidence below demonstrates, the answer is clearly no.

2. ELECTRICAL INJURY SCIENCE: HOW ELECTRICITY KILLS

2.1 CURRENT DETERMINES INJURY

Understanding the relative risks of different power sources requires grounding the analysis in the basic physiology of electrical injury. Injury severity is determined by the amount of electrical current flowing through the body—measured in milliamps (mA)—not by the wattage of the source. The threshold values established by decades of research are shown in Table 1.

Table 1. Physiology of electrical injury. Source: NIOSH Publication No. 2009-113, "Electrical Safety: Safety and Health for Electrical Trades Student Manual," p. 7 [16].

Current Level	Physiological Effect
Below 1 mA	Generally not perceptible
1 mA	Faint tingle
5 mA	Mild shock; not painful but disturbing. Generally harmless
6–25 mA (women) 9–30 mA (men)	Painful shock; possible loss of muscle control ('let-go' threshold). Individual cannot let go, but can be thrown away from the circuit if extensor muscles are stimulated
50–150 mA	Extreme pain; breathing stops. Severe muscular contractions. Potentially fatal
1,000–4,300 mA	Rhythmic pumping action of the heart ceases. Muscular contraction and nerve damage; death likely.
10,000 mA	Severe burns, cardiac arrest; almost certainly fatal
15,000 mA	Lowest overcurrent at which a typical fuse or circuit breaker opens a circuit

Important context: These thresholds apply to direct body contact with an energized conductor. In the lineworker safety scenario under discussion, the relevant question is not merely whether a source can theoretically produce dangerous current levels, but whether that current can be delivered through the distribution system—including transformer impedance, line losses, and load absorption—to a worker at a given point on the line. As explained in the following sections, this delivery pathway introduces substantial additional barriers that further reduce the already-minimal risk from small residential sources.

2.2 SOURCE IMPEDANCE AND THE LIMITS OF SMALL SOURCES

A 2022 National Renewable Energy Laboratory* (NREL) primer on IEEE 1547 islanding protection explains that sustained islanding requires a near-perfect balance between generation and load on the islanded section—an inherently unstable condition that inverter protection systems are specifically designed to detect and terminate. However, even without inverter protection, sustained islanding becomes increasingly unlikely as the generation source becomes smaller relative to the connected load, because small sources cannot maintain voltage and frequency stability across a typical distribution circuit [5].

Under ideal conditions, the maximum current available from a source can be approximated as Watts ÷ Volts. However, this theoretical maximum is never achieved in real-world fault conditions because distribution lines present substantial impedance to current flowing from a small residential source.

For small sources, the physical limits of power delivery further constrain the risk. A 400-watt source operating at 120 volts AC can deliver only about 3.5 amps under ideal conditions, and real distribution networks introduce substantial impedance through transformers, conductors, and connected loads. In addition, residential distribution transformers present significant impedance between the customer service and the primary distribution line, further limiting the ability of small sources to drive meaningful current back onto the utility system. These factors make sustained hazardous current flow from small sources extremely difficult to achieve in practice.

Typical residential distribution transformers are commonly rated between 15 and 50 kVA (kilovolt-amperes, a measure of transformer capacity), with 25-kVA and 50-kVA units widely used in utility distribution systems serving homes [17]. A 1,200–1,600-watt plug-in solar system (referring to inverter AC output, the actual power delivered to the grid) therefore represents only 2–6% of the transformer's capacity, further illustrating the limited ability of such small sources to drive sustained current onto a primary distribution line.

These physical constraints apply to plug-in solar generally, though they are most pronounced at the smallest system sizes. Even at 1,200–1,600 watts, a 120-volt source producing roughly 10–13 amps remains severely limited by transformer and line impedance, load mismatch, and voltage collapse under abnormal conditions.

2.3 THE TRANSFORMER STEP-UP MECHANISM: WHY WATTAGE TIER MATTERS

The critical danger mechanism in documented lineworker fatalities from generator backfeed is not direct 120-volt household current—it is the step-up transformation of that current through distribution transformers operating in reverse. A distribution transformer designed to step down 7,200 volts to 120 volts will, when energized from the secondary side by a sufficiently powerful generator, step that 120-volt source up to approximately 7,200 volts on the distribution line

* Note that NREL is now the National Laboratory of the Rockies (NLR). This paper uses the former name, NREL, for historical accuracy of the documents cited.

side. This mechanism is what creates the hazardous condition for lineworkers. The Polk County, Florida incident described in Section 4.1 documents precisely this mechanism: a homeowner's generator energized the distribution transformer in reverse, stepping 120 volts up to distribution-level voltage and seriously injuring an apprentice lineman [7]. Distribution transformers are not isolation devices; when energized from the secondary side they behave according to the same voltage ratio as in normal operation.

The key threshold is whether the backfeed source can sustain sufficient voltage and current under load to maintain energization through the transformer and the connected distribution circuit. Very small sources cannot maintain this condition. A 400-watt plug-in solar unit has extremely limited power available to energize the transformer and supply connected loads, and voltage quickly collapses when even modest loads are present on the circuit. By contrast, multi-kilowatt gasoline or diesel generators commonly used during outages can supply significantly greater power and can sustain transformer energization and load simultaneously. Indiana Electric Cooperatives and Middle Tennessee Electric have both issued public safety advisories warning specifically about the dangers of generator backfeed through distribution transformers, confirming that the utility industry itself recognizes generators as the primary backfeed hazard [18], [19].

It is worth distinguishing between plug-in solar systems in the 1,200–2,400-watt range discussed in this paper and the multi-kilowatt generators referenced above. While both may technically be described as "multi-kilowatt," a 2,400-watt plug-in solar system with UL 1741-certified anti-islanding protection is fundamentally different from a 3,000–5,000-watt portable generator with no automatic disconnection capability. The anti-islanding protection ensures that even at the upper end of the plug-in solar range, the system will cease energizing the circuit within 2 seconds of grid failure—a protection generators entirely lack.

The additional solar safety factor: An additional safety layer applies to solar generation. Even before these physical limitations come into play, a UL 1741-certified inverter will detect the loss of grid voltage and automatically disconnect from the circuit. The physical limits of low-wattage sources and automatic anti-islanding protection therefore operate as independent, redundant safety layers—either one alone substantially reduces the hazard. Portable generators provide neither automatic disconnection nor inverter-based anti-islanding protection.

3. WATTAGE-TIERED RISK ANALYSIS

For the lineworker backfeed hazard that is the subject of this analysis, the primary safety variable is protection architecture—specifically, whether automatic anti-islanding disconnection is present. Wattage is a secondary variable that determines the scale of the potential hazard only in the absence of that protection. (A separate, non-backfeed consideration—branch-circuit overcurrent, or "breaker masking"—does scale with wattage and is addressed through circuit sizing and overcurrent protection, discussed in Section 3.4.) The safety implications of backfeed depend strongly on source wattage because available current increases directly with power output. Table 2 examines actual lineworker risk across the wattage range relevant to residential plug-in solar and portable generators, integrating source impedance limitations, the transformer step-up mechanism, and the presence or absence of automatic safety protections. Generator risk assessments are informed by NIOSH fatality documentation [6] and utility industry safety warnings [18], [19]. Solar risk assessments are informed by the International Energy Agency (IEA) Photovoltaic Power Systems Programme (PVPS) IEA-PVPS risk analysis [4] and the NREL islanding protection primer [5].

Table 2. Wattage-tiered risk comparison of plug-in solar vs. portable gas or diesel generators [4], [5], [6], [18], [19].

Wattage	Max Current at 120V	Generator Risk (no auto protection)	Plug-in Solar Risk (UL 1741)	Solar Anti-Islanding
400W	3.5A max	Theoretical only	Minimal—source collapses + auto shutdown	Active (auto shutdown)
800W	6.7A max	Very low	Very low—impedance limits + auto shutdown	Active (auto shutdown)
1,200W	10A max	Low-moderate without protection	Negligible—auto shutdown eliminates sustained exposure	Active (auto shutdown)
2,000W	16.7A max	Real and documented	Very low—auto shutdown prevents sustained energization	Active (auto shutdown)
2,400W	20A max	Real and documented	Very low—auto shutdown prevents sustained energization	Active (auto shutdown)
3,000W–5,000W	25–42A max	Documented fatalities	Plug-in solar typically <2kW	Active (auto shutdown for solar, not generators)

Utility distribution protection systems are designed to detect and interrupt large fault currents on distribution feeders, typically far above normal load levels. By comparison, even a 1,600-watt plug-in solar system can supply only about 13 amps at 120 volts, two to three orders of magnitude smaller than the currents associated with distribution faults. In addition, inverter-based distributed energy resources certified under IEEE 1547 and UL 1741 are required to cease energizing the circuit under abnormal grid conditions, further limiting their ability to sustain hazardous conditions [3].

3.1 MULTIPLE PLUG-IN SOLAR UNITS ON A SINGLE DISTRIBUTION CIRCUIT

A natural question arises when considering the deployment of multiple plug-in solar units within a neighborhood or building: could the aggregate generation from many small systems create an islanding risk that individual systems do not? The technical evidence indicates that this concern is addressed by existing standards. Each UL 1741-certified microinverter operates its anti-islanding detection independently. A 2016 NREL study tested multiple inverters from different manufacturers simultaneously deployed on the same simulated distribution feeder. In 244 multi-inverter tests, the maximum run-on time observed was 632 milliseconds—well within the 2-second IEEE 1547 requirement [5].

The NREL primer on islanding further notes that while the speed of anti-islanding detection could theoretically decrease as the number of inverters increases, run-on times in all cases tested remained within the 2-second limit [5]. Moreover, sustained islanding requires a near-perfect balance between total generation and total load—a condition that becomes increasingly unlikely on a typical residential distribution circuit with diverse loads. In practice, even a building with 20 apartments each running 800-watt plug-in solar systems would collectively produce only 16 kW—a fraction of the 25–50 kVA capacity of the distribution transformer serving those units.

Germany's experience supports this: with over a million plug-in solar units deployed, no safety incidents attributable to aggregated systems have been reported [1].

A 2024 study by the Berlin University of Applied Sciences (HTW Berlin) found that plug-in solar systems may actually improve fire safety in residential electrical installations [20]. Because plug-in solar reduces the net load on building wiring, the study concluded that the number of electrical fires in German homes could decrease slightly with widespread adoption. Even under worst-case assumptions, the study found no statistically significant increase in fire risk [20].

3.2 SAFE HARBOR: SUB-420W PLUG-IN SOLAR

At 420 watts, maximum theoretical current delivery at 120V is 3.5 amps—well within the safety buffer of a standard 15-amp household circuit, and equivalent to the margin that Germany's regulatory framework applies to 800-watt systems on its 230V/16-amp circuits. The combination of source impedance limitations and the automatic anti-islanding shutdown required by UL 1741 makes meaningful sustained fault current delivery to a lineworker at the

distribution level physically implausible in practice. A UL-certified microinverter at this wattage will disconnect from the circuit within 2 seconds per UL 1741 Clause 9.3—and in many modern implementations within milliseconds—well before a lineworker could physically approach a downed conductor [2], [3].

3.3 PLUG-IN SOLAR AT 420W–1,200W

Given the limited available current, distribution system impedance, and the automatic cease-to-energize requirement of UL 1741-certified inverters, the practical risk to lineworkers from a sub-1,200-watt plug-in solar unit is, for all practical regulatory purposes, functionally negligible. This is the wattage tier addressed by Utah's law governing plug-in solar, HB 340 (1,200W cap) and Virginia's SB 250/HB 395 (1,200W cap), both of which exempt these systems from utility interconnection requirements [11], [12].

3.4 PLUG-IN SOLAR AT 1,200W–2,400W

As source wattage increases toward 2,400 watts, the theoretical current availability (up to 20 amps at 120V) begins to approach levels that could be dangerous if delivered efficiently and sustained. However, UL 1741-certified microinverters continue to provide automatic islanding protection at all wattages, making the practical risk for solar at this level comparable to the sub-1,200-watt range. The anti-islanding protection does not become less effective as wattage increases—it remains mandatory and automatic regardless of system size [2].

While anti-islanding protection remains equally effective across all wattages, systems above 420 watts do introduce a separate consideration: breaker masking. On a shared branch circuit, a plug-in solar system producing more than 3.5 amps can offset load current as seen by the circuit breaker, potentially allowing total current on a section of wiring to exceed the breaker's rating without tripping it. This is not an islanding or lineworker safety issue—it is an overcurrent protection issue addressed by pairing the system with a UL 3141-certified Power Control System, a panel-installed circuit-monitoring device, or installation on a dedicated circuit. The need for these additional protections is the basis for the notification requirement in the 420–2,400W policy tier (see Section 9).

Acknowledging the higher-wattage context: At 2,400 watts, a source without anti-islanding protection would present a meaningful hazard. This is precisely why UL 1741 certification is critical at this tier, and why this paper's policy recommendations distinguish between sub-1,200W systems (which should require no notification or interconnection process) and 1,200–2,400W systems (which should require notification but no interconnection process).

3.5 PORTABLE GENERATORS AT THE SAME WATTAGE TIERS

The risk profile of portable generators at identical wattage tiers is dramatically different. A 2,400-watt portable generator has no automatic anti-islanding protection—by design, generators are intended to provide power independently of the grid, which is precisely why they lack this safeguard. NEC Article 702 requires a transfer switch but imposes no automatic shutoff mechanism equivalent to UL 1741 [14]. When improperly connected without a transfer switch—

a common occurrence documented extensively in OSHA records—the generator can sustain line energization as it continues running through a grid outage. At 3,000–5,000W, available current output (25–42A at 120V) is sufficient to energize a distribution transformer in reverse and sustain hazardous conditions that have directly caused documented worker fatalities [6], [7], [8], [9].

4. DOCUMENTED SAFETY RECORD: THE EVIDENCE

4.1 OSHA- AND NIOSH-DOCUMENTED LINEWORKER FATALITIES FROM GENERATOR BACKFEED

The NIOSH Fatality Assessment and Control Evaluation (FACE) program and OSHA incident reporting systems contain specific documented cases of lineworker deaths directly attributable to portable generator backfeed. The NIOSH comprehensive monograph, *Worker Deaths by Electrocution* (Publication No. 98-131, 1998), summarizes 224 FACE electrocution investigative reports and remains the most comprehensive federal compilation of occupational electrocution data. While the publication date is 1998, the OSHA Electric Power Generation, Transmission, and Distribution industry hazards page continues to reference it as an authoritative resource, and the incident patterns it documents—generator backfeed during storm restoration—remain current and recurring [6], [21].

NIOSH FACE Case 90-05: A lineman was electrocuted while attaching a 2,400-volt powerline to a pole-mounted insulator. The victim was assured by his supervisor that the line was de-energized. It had in fact been re-energized by a nearby portable generator [6].

NIOSH FACE Case 90-02: A leader of a tree-trimming crew was electrocuted during hurricane cleanup when he contacted a downed powerline he believed to be de-energized. Electric current from a portable generator operating at a nearby gas station had re-energized the powerline [6].

Polk County, Florida, 2009: An apprentice lineman was grasping a conductor while wearing leather gloves, repairing a line downed by a falling tree. When a homeowner whose house was served by the line started a generator, the electricity passed through the distribution transformer, stepping up from 120 volts to 7,200 volts—the full distribution voltage. The lineman survived with serious injuries [7].

Flomaton, Alabama: An electric lineman employed by Pike Electric, Inc. was killed when he came into contact with a power line energized by a generator that had been hooked up improperly. The worker was transported by LifeFlight to hospital where he was pronounced dead. Alabama authorities investigated the improper connection [8].

In each case, the energization occurred because a portable generator remained connected to household wiring during a grid outage, allowing current to flow backward through the distribution service transformer and re-energize the distribution line. These cases are representative, not exhaustive. Informal industry discussions also reflect this risk. In online forums used by electrical workers, lineworkers describe close calls and incidents involving generator backfeed during outage restoration, reinforcing the safety concerns documented in formal investigations [9].

The NIOSH FACE database contains additional cases involving generator-induced line energization across multiple states and weather events. The utility industry itself recognizes this pattern: Indiana Electric Cooperatives published a specific safety advisory titled "Generator Backfeed is Dangerous and Potentially Deadly," and Middle Tennessee Electric's "Beware of Backfeed" advisory specifically identifies improperly connected generators as the primary backfeed threat [18], [19].

4.2 DOCUMENTED LINEWORKER INJURIES FROM UL 1741-CERTIFIED SOLAR INVERTERS

The inverters for plug-in solar are certified to the same UL 1741 standard as inverters used for rooftop solar, which have been in use for decades and have an impeccable safety record.

The documented number of lineworker fatalities or injuries caused by backfeed from a UL 1741-certified grid-tied solar inverter is: ZERO.

This conclusion is supported by statements from within the utility safety community itself. *Incident Prevention*, a trade publication written by and for electrical utility workers, states explicitly in its 2014 article on distributed generation (DG) safety by Mike Caro, CUSP*, that certified inverters protect lineworkers. "These inverters have been shown to be virtually 100 percent reliable. There has never been a known injury to a lineworker from backfeed onto a line from a DG facility associated with an inverter failure" [10].

This statement—from a publication whose entire editorial purpose is worker safety, not solar promotion—is perhaps the single most powerful piece of evidence in this analysis. The technology that utilities are subjecting to the heaviest regulatory scrutiny has never harmed a lineworker through the mechanism that scrutiny is designed to prevent.

A second *Incident Prevention* article from April 2024, "Solar Backfeed Safety on Distribution and Secondary Circuits," reaffirms this framework. The article emphasizes that lineworkers must protect themselves from all potential backfeed sources, including improperly installed solar systems—that is, systems installed *without* UL-certified inverters. This distinction is critical: the safety concern is not with certified equipment performing as designed, but with non-certified or improperly installed equipment. The article further confirms that UL-labeled grid-tied inverters

* Certified Utility Safety Professional

are required to shut off when grid power fails or AC frequency deviates, preventing the customer's system from becoming an island [22].

This analysis has been reviewed by a former utility lineworker with direct field experience in both solar installation and the utility grid power lines. The reviewer confirmed that this paper accurately represents lineworker safety protocols and addresses all relevant ways that behind-the-meter generation systems affect linework. They noted that the fear of backfeed is a constant concern during storm restoration, and that in their own practice, lineworkers treated solar and generator systems identically when mitigating hazards—making no operational distinction between the two. When they shared the paper's findings with colleagues still working as lineworkers, they were unaware that the regulatory standards for solar and generators differed so significantly and could not identify a safety-based rationale for the disparity.

4.3 QUANTIFIED RISK: THE IEA ISLANDING STUDY AND NREL CONFIRMATION

A formal risk analysis conducted under the International Energy Agency Photovoltaic Power Systems Programme (IEA-PVPS) applied standard fault-tree analysis techniques to the probability of lineworker injury from residential solar islanding. The study concluded that the annual risk of electric shock from islanding of PV systems under worst-case PV penetration scenarios is less than one in one billion [4].

Subsequent technical reviews, including a 2022 National Renewable Energy Laboratory (NREL) primer on IEEE 1547 islanding protection, cite this work as evidence that islanding risk from modern inverter-based PV systems is three orders of magnitude lower than the baseline electrical hazards already present in utility operations [5].

A companion IEA-PVPS study (Verhoeven, IEA-PVPS T5-07:2002), based on extensive real-world measurements over two years in a representative Dutch residential network, concluded that the probability of islanding itself is "virtually zero" [23].

A risk of less than one in one billion per person per year is, under any standard risk-tiering framework, effectively indistinguishable from zero. For comparison, the annual risk of being struck by lightning in the United States is approximately 1 in 1,000,000—roughly three orders of magnitude (1,000 times) greater than the upper-bound islanding risk from residential solar.

Taken together, the incident record, the operational experience of utilities, and formal probabilistic risk analyses all converge on the same conclusion: modern inverter-based residential solar systems present an extremely low islanding risk to lineworkers.

4.4 INTERNATIONAL SAFETY RECORD: THE EUROPEAN EXPERIENCE

The European experience with plug-in solar provides additional real-world confirmation of these safety conclusions. Germany, which has the most mature plug-in solar market in the world, had deployed over one million balcony solar units (Balkonkraftwerk) with no reported lineworker safety incidents aside from cases involving deliberate tampering [1]. Germany's regulatory framework permits systems up to 800 watts to be registered and connected without an

electrician, a threshold established based on a 2016 Fraunhofer Institute report showing that 600 watts of backfeed was safe even under worst-case scenarios, later raised to 800 watts to align with European Network Code standards [1].

Other European countries permitting plug-in solar with registration or notification include the Netherlands, Belgium, Spain, Portugal, Switzerland, Austria, Italy, and several others [1]. The German Association of Fire Chiefs (AGBF) has stated that it is unaware of fire safety issues from balcony power plants and has confirmed that the systems are insulated and touch-safe. The German and U.S. electrical systems differ significantly: Germany uses 400V three-phase service delivering 230V at standard outlets, while the U.S. uses 240V split-phase service delivering 120V at standard outlets. These differences mean that wattage-based safety thresholds do not translate directly between the two systems. However, the fundamental conclusion—that certified plug-in solar inverters with anti-islanding protection do not create meaningful lineworker safety risks—is consistent across both regulatory environments.

5. LINEWORKER PROTECTIVE PRACTICES AND THEIR IMPLICATIONS

5.1 STANDARD LINEWORKER SAFETY PROTOCOLS

Professional electrical lineworkers do not rely on the de-energization of lines as their sole protection. OSHA Standard 1910.269(m) requires employers to ensure that all sources of electric energy are identified and controlled through de-energization, isolation, or protective work practices before employees contact conductors [21]. Additionally, the National Rural Electric Cooperative Association (NRECA) and Federated Rural Electric Insurance Exchange (FREIE) identify several "life-saving rules" for field personnel in the Commitment to Zero Contacts initiative [24] including:

- Use rubber gloves and sleeves
- Apply proper insulating material or cover-up to adjacent conductors
- Use proper clearance procedures and Lockout/Tagout (LOTO)
- Test lines as de-energized and apply Personal Protective Grounds (PPGs) before contact.

5.2 PERSONAL PROTECTIVE GROUNDS: THE CRITICAL DEFENSE

Personal Protective Grounds (PPGs) are grounding cables attached to de-energized conductors before work begins, bonding the conductor to earth. If the line becomes energized from any source, the fault current routes to the ground rather than through the worker. PPGs are designed to carry momentary fault currents of tens of thousands of amps, allowing upstream protective devices to clear the fault before worker exposure occurs in accordance with American Society for Testing and Materials* (ASTM) F855 grounding equipment ratings [25]. Against a 400-watt plug-in solar source capable of delivering a maximum of 3.5 amps at 120 volts, a properly installed PPG represents an overwhelming margin of safety.

Critical context on PPGs and generators: The *Incident Prevention* article on distributed generation safety notes that generators may not trip standard protective devices when only the primary side is grounded due to transformer impedance. This means generators can present a backfeed hazard when only the primary side is grounded, because transformer impedance may limit fault current and prevent upstream protective devices from operating—lineworkers must also ground or isolate the secondary side to ensure generators cannot backfeed the line. This additional procedural burden exists specifically because generators lack automatic anti-islanding protection. Certified solar inverters, by contrast, have already disconnected before grounding procedures even begin [10].

Modern lineworker safety relies on multiple independent protection layers—including testing, grounding, protective equipment, and system protection—so that no single failure mode should expose workers to hazardous voltage.

* Now ASTM International

5.3 LINEWORKER PERSPECTIVE ON RELATIVE RISK

The *Incident Prevention* articles provide the most authoritative professional perspective on this question. The 2014 article by Mike Caro, CUSP, makes clear that personal generators are "the most common type of DG [distributed generation] you will come into contact with in the field" and that backfeed from customer generators during storm work is "one of the primary safety concerns for lineworkers." The article does not identify certified solar inverters as a comparable concern—to the contrary, it notes their "virtually 100 percent" reliability [10].

The 2024 *Incident Prevention* article reinforces this by focusing its backfeed concern specifically on non-UL-certified installations and battery storage systems connected without proper anti-islanding protections—not on UL 1741-certified grid-tied inverters operating as designed [22].

This professional perspective matters: When the utility industry's own safety publications identify generators as the primary backfeed concern and affirm the reliability of certified solar inverters, the regulatory asymmetry becomes impossible to justify on worker safety grounds.

6. TECHNICAL STANDARDS: UL 1741 AND IEEE 1547

6.1 WHAT UL 1741 REQUIRES: THE BASE STANDARD AND ITS SUPPLEMENTS

UL 1741, the *Standard for Inverters, Converters, Controllers and Interconnection System Equipment for Use with Distributed Energy Resources* (3rd Edition, 2021, updated March 10, 2026), is the primary U.S. safety certification standard for grid-tied solar inverters. In its current form, it is aligned with IEEE 1547-2018 and IEEE 1547.1-2020 and covers electrical safety, abnormal operation, and anti-islanding protection [2], [3].

The critical lineworker safety protection—automatic anti-islanding—is a requirement of the base UL 1741 standard. UL 1741 Clause 9.3 requires testing to verify that the inverter detects an island condition and ceases to energize the area electric power system within 2 seconds of island formation. This two-second disconnection requirement applies to all UL 1741-certified inverters regardless of supplement level [2], [3], [26].

Since 2017, two major supplements have been added to the UL 1741 standard. It is essential for policymakers to understand that these supplements add grid-management capabilities—they do not address deficiencies in the base standard's lineworker safety protections:

UL 1741 (Base Standard): Tests for electrical safety, fire hazards, abnormal operation, and anti-islanding protection. It requires the inverter to detect loss of grid conditions and cease energizing the area electric power system within two seconds. This requirement forms the foundational lineworker safety protection for inverter-based distributed generation. Every UL 1741-certified inverter—whether base, SA, or SB—must satisfy this anti-islanding requirement [2], [3], [26].

UL 1741 Supplement A (SA), published 2016: Adds "smart inverter" grid-support functions including voltage and frequency ride-through, volt-var control, and frequency-watt response. These functions allow inverters to remain connected during certain grid disturbances while supporting system stability. SA was developed in conjunction with California Rule 21 Phase 1 requirements. These are grid-management capabilities rather than additional lineworker safety protections—the base UL 1741 anti-islanding protection already addresses lineworker safety [2], [27].

UL 1741 Supplement B (SB), published 2021 (3rd Edition): Aligns advanced-function testing with IEEE 1547-2018 and IEEE 1547.1-2020. SB includes interoperability and communications testing using protocols such as IEEE 2030.5, SunSpec Modbus, or IEEE 1815 DNP3 (Distributed Network Protocol 3), enabling monitoring and control of distributed energy resources. SB became the certification pathway used in California Rule 21 for distributed energy resource (DER) compliance with IEEE 1547-2018. These capabilities support high-penetration DER grid management rather than adding new lineworker safety protections beyond the base anti-islanding requirement [2], [27], [28].

The key implication for this analysis: If a utility rejects a plug-in solar system certified to base UL 1741 solely because it lacks SA or SB certification, it is not making a lineworker safety argument—it is making a grid-management or interoperability argument. The anti-islanding protection that prevents lineworker injury from backfeed is identical across all three certification levels. Requiring SA or SB for a sub-1,200-watt plug-in system that will never provide grid services is regulatory overreach that uses technical standards language to accomplish what is functionally a barrier to entry.

IEEE 1547-2018, the *Standard for Interconnection and Interoperability of Distributed Energy Resources with Associated Electric Power Systems Interfaces*, establishes the broader technical requirements for connecting distributed energy sources to the utility grid, including requirements for islanding detection and cease-to-energize behavior. UL 1741 provides the product certification testing framework used to verify inverter compliance with these requirements, while UL 1741 SB incorporates the additional interoperability and advanced-function testing associated with the IEEE 1547-2018 revision [2], [3], [28].

6.2 THE FUNDAMENTAL DIFFERENCE FROM GENERATORS

Unlike inverter-based distributed energy resources, portable generators are not subject to a mandatory automatic cease-to-energize requirement. Portable generators have no equivalent automatic safety feature at any certification level. NEC Article 702 requires transfer equipment to prevent simultaneous connection of utility service and standby power, but this is a manual or semi-automatic requirement that depends entirely on proper installation and use [14]. The entire generator safety framework depends on: (1) the homeowner knowing that a transfer switch is required, (2) the homeowner having purchased and installed one correctly, and (3) the homeowner using it properly under the stress of a power outage. All three conditions must be met. When any one fails—as documented repeatedly in OSHA records—the line can become energized [6].

For UL 1741-certified solar inverters, dependence upon resident adherence to these behavior-dependent mechanisms is not a factor in achieving safety. The safety mechanism is built into the hardware and operates independently of user knowledge, training, or stress-of-the-moment decision making. This represents a categorically superior safety architecture, not a merely equivalent one.

It is important to acknowledge that no manufactured product is immune to malfunction. A UL 1741-certified inverter could theoretically fail to disconnect properly, just as any safety-critical component in any industry can experience a failure. However, the certification testing process under UL 1741 Clause 9.3—which tests anti-islanding at 33%, 66%, and 100% of rated output power—is specifically designed to verify reliable disconnection under a range of operating conditions [26]. The absence of any documented lineworker injury from a certified inverter failure across decades of deployment constitutes strong empirical evidence that the certification testing regime is effective. By contrast, generator safety depends entirely on human compliance with transfer switch requirements—a far more failure-prone protection mechanism than hardware-based automatic disconnection.

6.3 NRTL EQUIVALENCY: THE STANDARD VS. THE TESTING LABORATORY

An additional barrier that some utilities have imposed is requiring that inverters be certified specifically by UL Solutions (UL), formerly Underwriters Laboratories, rather than accepting certification to the UL 1741 standard by any NRTL. This conflation of the *standard* (UL 1741) with the *testing laboratory* is unsupported by federal law and creates an unjustified barrier to entry.

The Occupational Safety and Health Administration (OSHA) operates the NRTL Program under Code of Federal Regulations (CFR) 29 CFR 1910.7. Multiple NRTLs are authorized to certify products to UL 1741, including Intertek (ETL mark), CSA Group, TÜV Rheinland, and MET Laboratories. OSHA's position on equivalency is unambiguous: "OSHA considers all NRTLs recognized under 29 CFR 1910.7 to be equivalent in their 'capability' to certify to the standards in their scope of recognition. OSHA does not dictate to manufacturers which NRTL they must use" [29].

The California Energy Commission—which oversees interconnection for the largest solar market in the nation—requires certification "from a NRTL whose OSHA Scope of Recognition includes UL 1741," explicitly accepting any OSHA-recognized NRTL rather than requiring UL specifically [28]. The International Association of Electrical Inspectors (IAEI) likewise lists multiple NRTLs as authorized for UL 1741 certification without distinguishing between them [30].

A utility that requires certification by UL specifically, rather than certification to UL 1741 by any OSHA-recognized NRTL, is imposing a requirement that has no basis in federal regulation, no basis in the safety standard itself, and no technical justification. This practice functions as an additional barrier to plug-in solar adoption that does not promote lineworker safety.

6.4 THE NON-CERTIFIED EQUIPMENT CAVEAT

Safety: DIY systems that are not certified do pose a major risk to lineworkers. Passing legislation that requires UL 1741 or equivalent NRTL certification is itself a critical safety measure, because it establishes a minimum safety standard that prevents the sale and installation of uncertified equipment—the only category of inverter-based distributed generation identified as a genuine backfeed concern. Such legislation will also lead to broader requirements for certification of units for sale in the U.S., further improving the safety baseline.

It is important to acknowledge—as the 2024 *Incident Prevention* article does—that non-UL-certified inverters, battery storage systems connected without proper anti-islanding protections, or do-it-yourself installations that bypass certification standards can present genuine backfeed hazards [22]. The LBNL barrier study notes that the NRTL label is considered far more credible than self-certification and that authorities having jurisdiction (AHJ) appropriately look for this certification [1].

This paper's analysis and policy recommendations apply specifically to systems equipped with UL 1741-certified microinverters. The distinction between certified and non-certified equipment illustrates why the regulatory gatekeeping mechanism should be product certification to UL 1741, not burdensome interconnection processes that add cost and delay without improving safety beyond what the certification already requires.

7. SIDE-BY-SIDE COMPARISON

Table 3. Comparison of plug-in solar and gas or diesel generators by safety factors [3], [5], [6], [8], [9], [10].

Safety Factor	Plug-in Solar (with UL 1741-certified microinverter)	Portable Generator (any wattage)
Anti-islanding protection	YES—automatic, mandatory per UL 1741 Clause 9.3 [3]	NO—NEC Art. 702 requires transfer switch only [6]
Shuts down when grid fails	YES—within 2 seconds (often milliseconds)	N/A—backup generator would not be running when connected to operational grid
Documented lineworker fatalities	ZERO—confirmed by *Incident Prevention* [10]	YES—multiple OSHA/NIOSH-documented [8]
Transformer step-up risk	None—shuts down before energizing	YES—documented 120V→7,200V [9]
Carbon monoxide hazard	None	Kills dozens of users annually
Safety depends on user behavior	NO—hardware-based, automatic	YES—transfer switch install & use required
Quantified annual risk (IEA)	Less than one in one billion per year [5]	Not quantified—multiple confirmed fatalities
Current regulatory burden	High—interconnection agreements, permits	Low—hardware store purchase, minimal oversight

8. LEGISLATIVE MOMENTUM: THE EMERGING BIPARTISAN CONSENSUS

The regulatory disparity documented in this paper is not merely a theoretical concern—it has become the focus of a rapidly growing bipartisan legislative movement across the United States.

8.1 UTAH: FIRST-IN-THE-NATION LEGISLATION

In March 2025, Utah Governor Spencer Cox signed HB 340 (Solar Power Amendments) into law, making Utah the first state in the nation to exempt plug-in solar from utility interconnection requirements. The bill passed unanimously through both chambers, with the Utah House 72-0 and the Senate 27-0. Sponsored by Republican Representative Raymond Ward, HB 340 defines a "portable solar generation device" as a movable PV system with a maximum power output of 1,200W that connects through a standard 120V outlet and includes anti-islanding protection. The law exempts these devices from interconnection applications and utility fees while requiring UL and NEC compliance [11].

8.2 VIRGINIA: SOUTHEASTERN BREAKTHROUGH

In March 2026, Virginia's SB 250 and HB 395 passed the General Assembly with overwhelming bipartisan support, with final votes of 93-4 in the House and 29-11 in the Senate. Governor Abigail Spanberger signed the bill into law on April 22, 2026. The legislation allows portable solar devices up to 1,200W, prohibits utilities from imposing interconnection requirements or charging fees related to the devices, and prevents landlords with more than four rental units from prohibiting their use. Virginia's passage is particularly significant as the first southeastern state to advance plug-in solar legislation [12].

8.3 NATIONAL MOVEMENT

As of June 2026, legislators in 35 states and Washington, D.C. have introduced plug-in solar legislation, including 9 states that have passed legislation (Table 4). This bipartisan momentum reflects a growing recognition that existing interconnection requirements for small-scale solar are disproportionate to the actual safety risk [13]. Most legislation caps plug-in solar systems at 1,200–1,600W, although some states' proposed legislation accommodates 240-volt connections, higher wattage, and battery storage. Real-world AC output from these systems is lower than the DC panel rating due to conversion losses, panel orientation, and available sunlight—for example, an 800-watt DC system may deliver roughly 560–640 watts of AC power in practice.

Table 4. States that have introduced plug-in solar legislation as of June 1, 2026, and legislative status [13]

State	Status	State	Status
Alaska	*Deferred until 2027*	New Hampshire	*Passed*
Arizona	*Deferred until 2027*	New Jersey	*Passed one chamber*
California	*Passed one chamber*	New Mexico	*Deferred until 2027*
Colorado	*Passed*	New York	*Passed*
Connecticut	*Passed*	North Carolina	*Active*
Delaware	*Deferred until 2027*	Ohio	*Active*
Georgia	*Deferred until 2027*	Oklahoma	*Deferred until 2027*
Hawaii	*Deferred until 2027*	Oregon	*Deferred until 2027*
Idaho	*Deferred until 2027*	Pennsylvania	*Active*
Illinois	*Deferred until 2027*	Rhode Island	*Active*
Indiana	*Deferred until 2027*	South Carolina	*Deferred until 2027*
Iowa	*Deferred until 2027*	Utah	*Passed*
Maine	*Passed*	Vermont	*Passed*
Maryland	*Passed*	Virginia	*Passed*
Massachusetts	*Passed one chamber*	Washington	*Deferred until 2027*
Michigan	*Active*	Washington, D.C.	*Active*
Minnesota	*Passed one chamber*	Wyoming	*Deferred until 2027*
Missouri	*Deferred until 2027*		

Legend

Passed | Passed one chamber | Active | Deferred until 2027

8.4 DEVELOPING STANDARDS

The existing UL 1741 certification standard has served as the primary safety certification for grid-tied solar inverters for over two decades and has been the foundation for the safe deployment of millions of rooftop solar installations across the United States. Its anti-islanding protection requirement (Clause 9.3) applies identically to rooftop and plug-in solar inverters, and the safety record documented in this paper—zero lineworker injuries from certified inverter backfeed—reflects the effectiveness of UL 1741 across all deployment contexts. Multiple OSHA-recognized NRTLs are authorized to certify products to UL 1741, providing competitive certification pathways (see Section 6.3). The success of UL 1741 in protecting lineworker safety should not be overlooked while the newer UL 3700 framework develops.

UL Solutions released preliminary certification criteria (UL-3700) for plug-in PV systems in December 2025, establishing a pathway for product safety certification specifically designed for plug-in solar devices [31]. Lawrence Berkeley National Laboratory and GismoPower, with DOE Solar Energy Technologies Office funding, are actively collaborating on developing standards and resolving the technical barriers identified in the LBNL study [1].

However, UL 3700 remains in its early stages. Industry participants have characterized it as an Outline of Investigation rather than a fully developed standard—essentially a system-level framework that evaluates how all components of a plug-in solar system work together, in addition to existing component certifications such as UL 1741 for inverters [31]. Certification costs are expected to be substantial—potentially in the hundreds of thousands of dollars—creating a significant barrier to market entry for smaller manufacturers. As of May 2026, no products have yet received UL 3700 certification, and companies are unlikely to obtain certification until late 2026 at the earliest.

Policymakers should not condition plug-in solar deployment on UL 3700 availability when UL 1741 already provides the critical lineworker safety protection—anti-islanding—that is the focus of this paper. Legislation should reference “UL 1741 or equivalent NRTL certification” as the baseline safety requirement, with UL 3700 recognized as a complementary system-level standard as it matures.

9. POLICY RECOMMENDATIONS

Based on the evidence reviewed in this analysis, and informed by the legislative frameworks already enacted or advancing in multiple states, the Southern Alliance for Clean Energy recommends the following policy positions for state utility commissions, investor-owned utilities, cooperative governing boards, and municipal utility authorities in the southeastern United States:

9.1 RECOMMENDATION 1: RISK-TIERED INTERCONNECTION FRAMEWORK

Interconnection requirements should be explicitly tiered by wattage and by the presence or absence of certified anti-islanding protection, consistent with the approach taken by several states with signed legislation:

- **Sub-420 watts with UL 1741-certified microinverter:** No interconnection application, no utility agreement, no fees, and no inspection required—equivalent to the plug-and-play treatment of other appliances. Colorado enacted a similar exemption, set at a 391W threshold. At 420W, a plug-in solar system produces no more than 3.5A at 120V—the same safety buffer used in Germany for 800W systems on 230V circuits—which eliminates any breaker-masking risk on standard 15- or 20-amp household circuits, even in worst-case wiring configuration. No breaker-masking protection is required.
- **420–2,400 watts with UL 1741-certified microinverter:** System registration with the utility; no physical inspection requirement. Systems in this range remain within the rated capacity of standard 20-amp household circuits but may require breaker-masking protections (such as a UL 3141-certified Power Control System, a panel-installed circuit-monitoring device, or installation on a dedicated circuit) depending on the wiring configuration.
- **Over 2,400 watts, or any system without UL-certified microinverter:** May warrant a more robust interconnection review consistent with current rules.

The National Electrical Code (NEC) already establishes the safe capacity limits for residential circuits. A standard 20-amp household circuit at 120 volts has a total capacity of 2,400W. The NEC's 80% derating rule for continuous loads (1,920W on a 20A circuit; 1,440W on a 15A circuit) applies specifically to loads "expected to continue for 3 hours or more" under NEC Article 100 [14]. Plug-in solar units do not meet this definition in practice: even a 2,400W system reaches its rated output only briefly around solar noon under ideal conditions. As a result, the 80% derating does not bind plug-in solar at its rated wattage, and the full 2,400W capacity of a 20A circuit can be safely utilized when paired with appropriate breaker-masking protections such as a UL3141-certified Power Control System, a panel-installed circuit-monitoring device, or when plugged onto a dedicated circuit. Legislation that caps plug-in solar at 1,200 watts is therefore substantially more restrictive than what the NEC itself requires for safety. For households seeking higher capacities, hiring a licensed electrician to install a dedicated circuit or upgrade to a 240-volt outlet—typically costing a few hundred dollars—provides a pathway under existing NEC and UL frameworks. Restricting all plug-in solar to 1,200 watts without offering a

pathway for higher capacities through proper electrical work may unnecessarily limit solar deployment.

The NEC also does not impose a household level cap on the number of plug-in solar systems a homeowner may install. Each system must independently meet branch circuit and overcurrent protection requirements under NEC Articles 210 and 240, but a homeowner who installs multiple dedicated circuits—for example, two separate 20-amp circuits each serving a 2,000W system—is operating entirely within the framework the NEC already provides. Service-panel-level capacity provisions under NEC Article 705 may apply to the combined system size, particularly for installations approaching the service entrance rating [14]. Legislation that caps households at one system per service address is therefore more restrictive than existing electrical code requirements and unnecessarily limits the deployment of a technology that households are otherwise free to install.

9.2 RECOMMENDATION 2: EQUIVALENT GENERATOR STANDARDS

If utilities or any other organization assert lineworker safety as a basis for solar interconnection requirements, the same regulatory logic must be applied consistently to portable generators. NEC Article 702 requires transfer switches but imposes no automatic anti-islanding protection and no utility notification or approval process [14]. Any utility requiring a solar interconnection agreement for sub-2,400-watt systems should be required to demonstrate why portable generators at equivalent or greater wattage do not trigger equivalent requirements.

9.3 RECOMMENDATION 3: EVIDENCE-BASED REGULATORY REVIEW

State public utility commissions may initiate a formal review of residential distributed generation interconnection rules, with specific direction to assess whether current requirements for sub-2,400-watt plug-in solar systems are proportionate to documented safety risks. This review should incorporate: OSHA and NIOSH fatality data [6]; UL 1741 [2] and IEEE 1547-2018 certification requirements [3]; the IEA-PVPS islanding risk quantification study [4]; the LBNL barrier analysis [1]; and legislative frameworks enacted.

As part of this review, commissions should specifically evaluate whether requirements for external disconnect switches remain justified for systems equipped with UL 1741-certified or equivalent NRTL-certified inverters. The evidence reviewed in this paper demonstrates that certified inverters provide automatic disconnection within 2 seconds of grid failure—a hardware-based protection that renders an external manual disconnect switch redundant for lineworker safety purposes. Removing external disconnect switch requirements from interconnection tariffs for certified systems would eliminate an unnecessary cost and installation barrier without compromising safety.

More broadly, the safety of plug-in solar—like the safety of any household appliance—is established and continuously updated by independent certification bodies (UL, ETL, and other NRTLs), by the National Electrical Code and by IEEE standards. These bodies have the technical expertise, the testing infrastructure, and the institutional incentives to set safety requirements that reflect current engineering knowledge. Legislation works best when it respects this division

of labor: certification and code bodies establish what is safe, and legislation establishes the administrative pathway by which homeowners can use safe, certified products on their own property without unnecessary regulatory burden.

9.4 RECOMMENDATION 4: TRANSPARENCY IN RULEMAKING

Any utility seeking to impose or maintain interconnection requirements on plug-in solar systems should be required to provide specific, verifiable, technically-documented safety justifications—not generic safety language—and to address directly the differential regulatory treatment of generators with equivalent or greater power output and no automatic safety protections.

CONCLUSION

The evidence is unambiguous. Portable gas and diesel generators have a documented, confirmed record of causing lineworker fatalities through the specific mechanism—transformer-stepped backfeed onto distribution lines assumed to be de-energized—that utility interconnection rules are designed to prevent. Plug-in solar units with UL 1741-certified microinverters have never caused a lineworker injury through this or any other mechanism, a record confirmed by the utility safety industry's own publications, by peer-reviewed risk quantification studies conducted under the International Energy Agency and reviewed by the U.S. National Renewable Energy Laboratory, and by a DOE-funded barrier analysis from Lawrence Berkeley National Laboratory.

The anti-islanding protection built into certified solar inverters is automatic, hardware-based, and independent of user behavior—making it categorically superior to the transfer switch requirements applied to generators, which depend entirely on homeowner knowledge, installation, and behavior under stress.

This paper has been careful to acknowledge that no electrical source is entirely without theoretical risk, and that non-certified or malfunctioning certified equipment can present genuine hazards. But the regulatory question is not whether risk is theoretically conceivable—it is whether the level of risk justifies the level of regulation imposed. By every available metric—documented fatalities, peer-reviewed risk quantification, industry safety publications, DOE-funded national laboratory research, and the bipartisan legislative consensus now emerging across the country—the answer for UL 1741-certified plug-in solar under 2,400 watts is clearly no.

No scientifically credible safety rationale supports the current regulatory environment in which a 400-watt plug-in solar unit with a certified microinverter faces heavier regulatory scrutiny than a 5,000-watt gasoline generator. The asymmetry does not reflect safety evidence, and should be corrected through risk-tiered, evidence-based regulatory reform.

Finally, plug-in solar is not inherently limited to 120-volt systems. Dedicated 240-volt circuit configurations supporting significantly higher output are technically feasible under existing NEC and UL frameworks. The case for their equitable regulation falls outside the scope of this analysis, which addresses 120-volt systems, and will be addressed in a forthcoming SACE whitepaper.

ACKNOWLEDGEMENTS

We would like to thank the following individuals for their review and feedback on this paper: Achim Ginsberg-Klemmt (GismoPower); Erika Ginsberg-Klemmt (GismoPower); Mark Leidlein (Solar120); Nathan Phelps (Vote Solar); Stephan Scherer (CraftStrom Solar); Cora Stryker (Bright Saver); Dan Terpstra, Ph.D.; and Eric Wigginton (Efficient Power & Light, LLC). We also thank several additional reviewers who wished to remain anonymous.

ACRONYMS

AC	Alternating Current
AGBF	German Association of Fire Chiefs
ASTM	American Society for Testing and Materials (now ASTM International)
CFOI	Census of Fatal Occupational Injuries
CFR	Code of Federal Regulations
CSA	Canadian Standards Association (now CSA Group)
CUSP	Certified Utility Safety Professional
DC	Direct Current
DER	Distributed Energy Resource
DG	Distributed Generation
DHHS	Department of Health and Human Services
DOE	Department of Energy
ESFI	Electrical Safety Foundation International
FACE	Fatality Assessment and Control Evaluation
FREIE	Federated Rural Electric Insurance Exchange
HTW	Hochschule für Technik und Wirtschaft (HTW Berlin)
IAEI	International Association of Electrical Inspectors
IEA	International Energy Agency
IEEE	Institute of Electrical and Electronics Engineers
KTL	Korea Testing Laboratory
LBNL	Lawrence Berkeley National Laboratory
LOTO	Lockout/Tagout
NEC	National Electrical Code
NFPA	National Fire Protection Association
NIOSH	National Institute for Occupational Safety and Health
NLR	National Laboratory of the Rockies
NRECA	National Rural Electric Cooperative Association
NREL	National Renewable Energy Laboratory (now NLR)
NRTL	Nationally Recognized Testing Laboratory
OSHA	Occupational Safety and Health Administration
OSHRC	Occupational Safety and Health Review Commission
PIPV	Plug-in Photovoltaic
PV	Photovoltaic
PVPS	Photovoltaic Power Systems Programme
PPGs	Personal Protective Grounds
SA	Supplement A (UL 1741)
SACE	Southern Alliance for Clean Energy
SB	Supplement B (UL 1741)
UL	UL Solutions (formerly Underwriters Laboratories)

CITATIONS AND SOURCES

[1] Gerber, Daniel L.; Ginsberg-Klemmt, Achim; et al. "Barriers to Balcony Solar and Plug-In Distributed Energy Resources in the United States." *Energies* 2025, 18(8), 2132. Funded by Lawrence Berkeley National Laboratory (LBNL) and U.S. DOE. https://doi.org/10.3390/en18082132

[2] UL Solutions. *UL 1741: Standard for Inverters, Converters, Controllers and Interconnection System Equipment for Use With Distributed Energy Resources* (3rd Edition, 2021; updated March 10, 2026). Clause 9.3 mandates anti-islanding testing with 2-second disconnection requirement. https://www.shopulstandards.com/ProductDetail.aspx?productId=UL1741

[3] Institute of Electrical and Electronics Engineers (IEEE) Standards Association. *IEEE Std 1547-2018: Standard for Interconnection and Interoperability of Distributed Energy Resources with Associated Electric Power Systems Interfaces*. April 6, 2018. Establishes technical interconnection requirements including anti-islanding protection. https://standards.ieee.org/ieee/1547/5915/

[4] Cullen, Neil; Thornycroft, Jim; and Collinson, Alan. *Risk Analysis of Islanding of Photovoltaic Power Systems Within Low Voltage Distribution Networks*. International Energy Agency Photovoltaic Power Systems Programme (IEA-PVPS), Report T5-08:2002. March 2002. Formal fault-tree analysis concluding islanding shock risk is less than one in one billion per year. https://iea-pvps.org/key-topics/risk-analysis-of-islanding-of-photovoltaic-power-systems-within-low-voltage-distribution-networks-2002/

[5] Narang, David; Gonzalez, Sigifredo; and Ingram, Michael. *A Primer on the Unintentional Islanding Protection Requirement in IEEE Std 1547-2018*. National Renewable Energy Laboratory, NREL/TP-5D00-77782. April 2022. Cites IEA-PVPS risk findings. https://docs.nrel.gov/docs/fy22osti/77782.pdf

[6] National Institute for Occupational Safety and Health (NIOSH). *Worker Deaths by Electrocution: A Summary of NIOSH Surveillance and Investigative Findings*. Department of Health and Human Services (DHHS) Publication No. 98-131. May 1998. Contains 224 FACE electrocution investigative reports including Cases 90-02 and 90-05 (generator backfeed fatalities). https://www.cdc.gov/niosh/docs/98-131/

[7] Rossetter, Shelley. *Improperly Connected Generators Put Emergency Workers at Risk*. The Ledger. October 2, 2009. https://www.theledger.com/story/news/2009/10/03/improperly-connected-generators-put-emergency-workers-at-risk/26213670007/

[8] U.S. Occupational Safety and Health Review Commission (OSHRC). *OSHRC Docket No. 06-0166: Secretary of Labor, Complainant v. Pike Electric, Inc., Respondent.* February 5, 2007. https://www.oshrc.gov/wp-content/uploads/06-0166.pdf

[9] "Backfed Generator Kills Lineman." *Homesteading Today*, September 2009. Linemen discuss their close calls and firsthand eyewitness accounts of hazardous events related to generators. https://www.homesteadingtoday.com/threads/back-fed-generator-kills-line-man.226280/

[10] Caro, Mike, CUSP. "Distributed Generation Safety for Lineworkers." *Incident Prevention*, July 15, 2014. https://incident-prevention.com/blog/distributed-generation-safety-for-lineworkers/

[11] Utah State Legislature. HB 340: Solar Power Amendments. https://le.utah.gov/~2025/bills/static/HB0340.html

[12] Virginia General Assembly. SB 250 / HB 395. Passed Senate and House of Delegates, April 2026. https://lis.virginia.gov/bill-details/20261/HB395

[13] "States with Plug-in Solar Legislation." Bright Saver, June 1, 2026. Reports 35 states and DC with introduced plug-in solar legislation as of June 2026. https://www.brightsaver.org/publicly-filed-states

[14] National Fire Protection Association (NFPA). *NFPA 70: National Electrical Code* (2023). Articles 702 (Optional Standby Systems) and 705 (Interconnected Electric Power Production Sources). https://www.nfpa.org/codes-and-standards/nfpa-70-standard-development/70

[15] Electrical Safety Foundation International (ESFI). *Workplace Electrical Fatalities: 2011–2023*. Compiled from U.S. Bureau of Labor Statistics Census of Fatal Occupational Injuries (CFOI) and U.S. Department of Labor Occupational Safety and Health Administration (OSHA) 170 reports. Data shows an average of approximately 150 workplace electrical fatalities per year. https://www.esfi.org/electrical-fatalities-in-the-workplace-2011-2023/

[16] National Institute for Occupational Safety and Health (NIOSH). *Electrical Safety: Safety and Health for Electrical Trades Student Manual*. DHHS Publication No. 2009-113. April 2009. https://www.cdc.gov/niosh/docs/2009-113/

[17] Short, T. A. *Electric Power Distribution Handbook*. CRC Press, 2004. ISBN 978-0849317910.

[18] Indiana Electric Cooperatives. "Generator Backfeed is Dangerous and Potentially Deadly." May 31, 2014. https://www.indianaec.org/2014/05/31/generator-backfeed-dangerous-potentially-deadly/

[19] Middle Tennessee Electric. "Beware of Backfeed." Utility acknowledgment that generators are the primary source of dangerous backfeed incidents. https://mte.com/beware-backfeed

[20] Bergner, J. *Brief Report: Plug-In Solar Panel 800W*. Berlin University of Applied Sciences (HTW Berlin), February 2025. https://solar.htw-berlin.de/publikationen/kurzbericht-steckersolar-800-w/.

[21] Occupational Safety and Health Administration (OSHA). *Electric Power Generation, Transmission, and Distribution: Industry Hazards*. References NIOSH FACE reports, OSHA 1910.269, and electrical safety standards. https://www.osha.gov/power-generation/industry-hazards

[22] Mabe, Jerone. "Solar Backfeed Safety on Distribution and Secondary Circuits." *Incident Prevention*, April 14, 2024. https://incident-prevention.com/blog/solar-backfeed-safety-on-distribution-and-secondary-circuits/

[23] Verhoeven, Bas. *Probability of Islanding in Utility Networks Due to Grid-Connected Photovoltaic Power Systems*. International Energy Agency Photovoltaic Power Systems Programme (IEA-PVPS), Report T5-07:2002. September 2002. https://iea-pvps.org/key-topics/probability-of-islanding-in-utility-networks-due-to-grid-connected-photovoltaic-power-systems-2002/

[24] National Rural Electric Cooperative Association (NRECA) and Federated Rural Electric Insurance Exchange (FREIE). *Commitment to Zero Contacts: Implementation Guide for Field Personnel*. https://www.cooperative.com/programs-services/safety-resap/commitment-to-zero/

[25] ASTM International. *ASTM F855-20: Standard Specifications for Temporary Protective Grounds to Be Used on De-Energized Electric Power Lines and Equipment.* February 28, 2023. https://store.astm.org/f0855-20.html

[26] MET Laboratories (Eurofins). "UL 1741: The Standard for Anti-Islanding Protection." August 3, 2023. Describes Clause 9.3 anti-islanding test procedure: 2-second disconnection requirement, tested at 33%, 66%, and 100% rated output power. https://metlabs.com/product-safety/ul-1741-safety-testing-of-inverters-includes-anti-islanding-requirement/

[27] Solar Builder Magazine. "Smart PV Inverter Overview: IEEE 1547-2018 and UL 1741 Explained." Technical Bulletin, March 6, 2023. Details UL 1741 base standard, Supplement A (SA), and Supplement B (SB) testing requirements and their relationship to IEEE 1547-2018 grid-support functions. https://solarbuildermag.com/inverters/smart-pv-inverter-overview-ieee-1547-2018-and-ul-1741-explained/

[28] California Energy Commission. "Changes to the Inverter and Energy Storage System Lists: UL 1741 3rd Edition Inclusive of Supplement SB." Requires certification "from a NRTL whose OSHA Scope of Recognition includes UL 1741"—explicitly accepting any OSHA-recognized NRTL. https://www.energy.ca.gov/sites/default/files/2022-03/Addition_of_UL_1741_3rd_Ed_Supplement_SB_to_the_Solar_Equipment_Lists_ADA.pdf

[29] Occupational Safety and Health Administration (OSHA). *Nationally Recognized Testing Laboratory (NRTL) Program*, *29 CFR 1910.7*. OSHA states: "OSHA considers all NRTLs recognized under 29 CFR 1910.7 to be equivalent in their 'capability' to certify to the standards in their scope of recognition. OSHA does not dictate to manufacturers which NRTL they must use." https://www.osha.gov/nationally-recognized-testing-laboratory-program

[30] International Association of Electrical Inspectors (IAEI). "The NEC, Standards, OSHA, NRTLs, and Beyond." November 2021. Lists Intertek (ETL), CSA Group, MET Laboratories, and TÜV Rheinland as OSHA-recognized NRTLs for UL 1741, confirming federal equivalency of all recognized testing laboratories. https://iaeimagazine.org/columns/photovoltaic/the-nec-standards-osha-nrtls-and-beyond/

[31] UL Solutions. *UL Solutions Debuts Testing and Certification Framework for Safer Plug-In Solar Across the United States.* January 8, 2026. https://www.ul.com/news/ul-solutions-debuts-testing-and-certification-framework-safer-plug-solar-across-united-states

---

Southern Alliance for Clean Energy (SACE)

cleanenergy.org

© 2026 Southern Alliance for Clean Energy. Permission granted to reproduce with attribution.

Our final technical report for DOE award DE-SC0022708 was published by the Office of Scientific and Technical Information (OSTI ID 3011045) two weeks ago and is available at the following link: https://doi.org/10.2172/3011045

Best regards

Achim Ginsberg-Klemmt
Principal Investigator (DE-SC0022708)
GismoPower LLC
Patented Mobile Solar Carport Appliance