AGENDA

NEC Code-Making Panel 3 (NEC P03)
NFPA 70 Second Draft Meeting (Annual 2025)

October 14 - 17, 2024
8:00 a.m. – 5:00 p.m. (PT)

Torrance Marriott Redondo Beach, CA

1. **Call to order.** Robert Jones.
2. **Introductions.** See committee roster attached.
3. **Chair Report.** Robert Jones.
4. **Staff liaison report/presentation.** Barry Chase.
5. **Previous meeting minutes.** January 2024, Charleston, SC. See attached.
6. **NFPA 70 Second Draft.**
   a. **Review of Public Comments.** See attached.
      i. **Task group report(s).**
   b. **Extract updates (if applicable)**
7. **Other Business.**
8. **Future meetings.**
9. **Adjournment.**

Address List No Phone

09/27/2024
Jeffrey S. Sargent
NEC-P03

Code-Making Panel 3
National Electrical Code®

Robert A. Jones **IM** 04/04/2017
Chair **NEC-P03**
Independent Electrical Contractors, Inc.
IEC Texas Gulf Coast
1960 West Lamar
Houston, TX 77019
Independent Electrical Contractors, Inc.
Alternate: Adam D. Corbin

Richard S. Anderson **M** 7/28/2006
Principal **NEC-P03**
RTKL Associates Inc.
5860 Egdehill Drive
Alexandria, VA 22303
Building Industry Consulting Services International
Alternate: Ward Judson

Douglas P. Bassett **IM** 10/18/2011
Principal **NEC-P03**
Xfinity Home
12461 Teak Circle
Fort Myers, FL 33913
Electronic Security Association
Alternate: Tyler W. McCurdy

Steven D. Burlison **UT** 1/10/2008
Principal **NEC-P03**
Duke Energy
2801 West State Road 426
Oviedo, FL 32765-7526
Electric Light & Power Group/EEI
Alternate: Scott Lewis

Shane M. Clary **M** 10/3/2002
Principal **NEC-P03**
Bay Alarm Company
5130 Commercial Circle
Concord, CA 94520-8522
Automatic Fire Alarm Association, Inc.
Alternate: Thomas J. Parrish

Michael Cogbill **IM** 4/2/2020
Principal **NEC-P03**
REV2 Consulting
532 Ebbtide Drive
North Palm Beach, FL 33408
Custom Electronic Design & Installation Association (CEDIA)
Alternate: Ken Erdmann

Dale Crawford **M** 08/29/2024
Principal **NEC-P03**
Steel Tube Institute
221 Historic 25th Street
Ogden, UT 84401-2301
Steel Tube Institute of North America
Alternate: Ryan Jackson

Raymond W. Horner **M** 11/30/2016
Principal **NEC-P03**
Atkore International
Allied Tube & Conduit
16100 South Lathrop Avenue
Harvey, IL 60426-6021
National Electrical Manufacturers Association
Alternate: James S. Conrad

Donald R. Iverson **M** 08/11/2020
Principal **NEC-P03**
Schneider Electric
Manager of Industry Code
421 N. Waverly Road
Eaton Rapids, MI 48827
Alternate: Keith Waters

Chad M. Jones **M** 08/17/2017
Principal **NEC-P03**
Cisco Systems
4125 Highlander Parkway
Richfield, OH 44286
Alternate: Morgan E. McCandless

Address List No Phone

09/27/2024
Jeffrey S. Sargent
NEC-P03

Code-Making Panel 3

National Electrical Code®

Kyle Krueger **IM** 11/30/2016
Principal **NEC-P03**
National Electrical Contractor Association (NECA)
Executive Director, Codes and Standards
1201 Pennsylvania Ave Nw
Suite 1200
Washington, DC 20004
National Electrical Contractor Association (NECA)
Alternate: David J. Hendershot

Patrick Mahoney **E** 11/29/2023
Principal **NEC-P03**
Town of Fairfield Building Department
725 Old Post Road
Fairfield, CT 06824
NFPA Electrical Inspection Section (EIS)

Timothy J. Mikloiche **E** 04/04/2017
Principal **NEC-P03**
Town of West Hartford
Electrical Inspector, Building Department
50 South Main Street
West Hartford, CT 06107
International Association of Electrical Inspectors
Alternate: Mohinder P. Sood

Steven J. Owen **IM** 12/1/1996
Principal **NEC-P03**
Steven J. Owen, Inc.
253 Oak Forest Trail
Pelham, AL 35124-2523
Associated Builders & Contractors
Alternate: John Lupacchino

David A. Pace **U** 1/1/1994
Principal **NEC-P03**
Olin Corporation
1638 Industrial Road
McIntosh, AL 36553
American Chemistry Council

Samuel Rokowski **IM** 12/06/2019
Principal **NEC-P03**
Maddox Electric Company, Inc.
1527 Shorewood Drive
Auburndale, FL 33823
Alternate: Chad Austin Maddox

William C. Schaumann **U** 04/17/2024
Principal **NEC-P03**
Burns and McDonnell
200 W. Adams Street
Suite 2700
Chicago, IL 60606
IEEE-IAS/PES JTCC
Alternate: Atul Shenoy

Anthony Tassone **RT** 12/07/2022
Principal **NEC-P03**
UL LLC
1285 Walt Whitman Road
Melville, NY 11747-3085
UL Solutions
Alternate: Paul Z. Vanderlaan

Ronald Tellas **M** 04/02/2020
Principal **NEC-P03**
Belden
110 Fox Water Trail
St. Augustine, FL 32086
Communications Cable & Connectivity Association (CCCA)
Alternate: Stephen Eaves

Daniel Raymond Van Sickle, III **L** 03/20/2023
Principal **NEC-P03**
Electrical Training Alliance of Jacksonville
Training Director
4951 Richard Street
Jacksonville, FL 32207
International Brotherhood of Electrical Workers
Alternate: Louis Alvarez

George Allan Zimmerman **SE** 04/11/2018
Principal **NEC-P03**
CME Consulting, Inc.
1430 9th Street
Manhattan Beach, CA 90266
Ethernet Alliance

Address List No Phone

09/27/2024
Jeffrey S. Sargent
NEC-P03

Code-Making Panel 3
National Electrical Code®

Louis Alvarez **L** 12/02/2020
Alternate **NEC-P03**
Local 3 IBEW
110 Scudders Lane
Glenwood Landing, NY 11547
International Brotherhood of Electrical Workers
Principal: Daniel Raymond Van Sickle, III

James S. Conrad **M** 12/02/2020
Alternate **NEC-P03**
RSCC Wire & Cable dba Marmon IEI
66 Mountain Laurel Drive
Tolland, CT 06084-2276
National Electrical Manufacturers Association
Principal: Raymond W. Horner

Adam D. Corbin **IM** 4/3/2003
Alternate **NEC-P03**
Corbin Electrical Services, Inc.
35 Vanderburg Road
Marlboro, NJ 07746
Independent Electrical Contractors, Inc.
Principal: Robert A. Jones

Stephen Eaves **M** 04/17/2024
Alternate **NEC-P03**
VoltServer, Inc.
42 Ladd Street, Unit 227
East Greenwich, RI 02818
Communications Cable & Connectivity Association (CCCA)
Principal: Ronald Tellas

Ken Erdmann **IM** 04/02/2020
Alternate **NEC-P03**
Erdmann Electric Inc.
270 N 300 W
Springville, UT 84663
Custom Electronic Design & Installation Association (CEDIA)
Principal: Michael Cogbill

David J. Hendershot **IM** 04/03/2019
Alternate **NEC-P03**
Main Electric Construction Inc.
2626 Valley Street
Minot, ND 58701
National Electrical Contractor Association (NECA)
Principal: Kyle Krueger

Ryan Jackson **M** 12/07/2022
Alternate **NEC-P03**
Self-employed
5930 West Fox River Lane
West Valley City, UT 84118
Steel Tube Institute of North America
Principal: Dale Crawford

Ward Judson **M** 04/04/2017
Alternate **NEC-P03**
nVent
34600 Solon Road
Solon, OH 44139-2631
Building Industry Consulting Services International
Principal: Richard S. Anderson

Scott Lewis **UT** 08/23/2023
Alternate **NEC-P03**
Florida Power & Light
4253 Wicks Branch Road
Saint Augustine, FL 32086
Electric Light & Power Group/EEI
Principal: Steven D. Burlison

John Lupacchino **IM** 11/30/2016
Alternate **NEC-P03**
Gaylor Electric Incorporated
17225 Kraft Court
Noblesville, IN 46060
Associated Builders & Contractors
Principal: Steven J. Owen

Chad Austin Maddox **IM** 03/20/2023
Alternate **NEC-P03**
Maddox Electric Company, Inc.
9280 Chandler Drive
Groveland, FL 34736
Principal: Samuel Rokowski

Morgan E. McCandless **M** 08/29/2024
Alternate **NEC-P03**
Cisco Systems, Inc.
3901 Lick Mill Boulevard
Apartment 305
Santa Clara, CA 95054
Principal: Chad M. Jones

Address List No Phone

09/27/2024
Jeffrey S. Sargent
NEC-P03

Code-Making Panel 3
National Electrical Code®

Tyler W. McCurdy **IM** 08/29/2024
Alternate **NEC-P03**
Amazon/Ring Protect, Inc.
888 Sage Drive
Suite 1A
Cedar City, UT 84720
Electronic Security Association
Principal: Douglas P. Bassett

Thomas J. Parrish **M** 08/10/2022
Alternate **NEC-P03**
Telgian Corporation
15771 Twin Ponds
Pinckney, MI 48169-9717
Automatic Fire Alarm Association, Inc.
Principal: Shane M. Clary

Atul Shenoy **U** 08/29/2024
Alternate **NEC-P03**
Burns & McDonnell
9201 Stateline Road
Kansas City, MO 64114
IEEE-IAS/PES JTCC
Principal: William C. Schaumann

Mohinder P. Sood **E** 03/20/2023
Alternate **NEC-P03**
Core Engineers
Electrical Plans Examiner
5427 Castle Bar Lane
Alexandria, VA 22315-5521
International Association of Electrical Inspectors
Principal: Timothy J. Mikloiche

Paul Z. Vanderlaan **RT** 12/07/2022
Alternate **NEC-P03**
UL LLC
1285 Walt Whitman Road
Melville, NY 11747
UL Solutions
Principal: Anthony Tassone

Keith Waters **M** 08/11/2020
Alternate **NEC-P03**
Schneider Electric
1601 Mercer Road
Lexington, KY 40511
Principal: Donald R. Iverson

Jeffrey S. Sargent 08/31/2019
Staff Liaison **NEC-P03**
National Fire Protection Association
1 Batterymarch Park
Quincy, MA 02169-7471

MINUTES

NFPA 70 Code-Making Panel 3
NFPA 70 First Draft Meeting (Annual 2025)

January 21-24, 2024
8:00 AM – 5:00 PM (ET)

Charleston, South Carolina

1. **Call to order.** Robert Jones, chair, called the meeting to order at 8:00 AM on 1/21/2024.
2. **Introductions.** Attendees introduced themselves and identified their affiliation an attendance sheet was circulated by NFPA.
3. **Chair report.** Robert Jones welcomed attendees and provided an overview of the meeting.
4. **Staff liaison report.** Barry Chase provided an overview of the standards development process and the revision cycle schedule.
   a. No members declared that they had been retained to represent the interest of an entity that would be classified in an interest category different from their own with respect to a specific issue or issues that were being addressed by the committee.
5. **Previous meeting minutes.** The minutes from October 2021 virtual meeting were approved without revision.
6. **NFPA 70 First Draft.**
   a. **Review of Public Inputs.** The Technical Committee reviewed the Public Inputs and developed First Revisions and Committee Inputs as necessary. These will be available in the First Draft Report at www.nfpa.org/70.
   b. **Task group reports.** The following task groups provided their reports and recommendations.
      i. **CMP-3 Task Group 1**. Samuel Rokowski, Chair. The task group provided a report and revisions were made. The task group was reconstituted to continue work. See attached.
      ii. **CMP-3 Task Group 2**. Chad Jones, Chair. The task group provided a report and revisions were made. The task group was reconstituted to continue work. See attached.
   c. **Presentation(s).** The committee heard presentations from the following individuals.
      i. **Damaged Conductors and Wiring Methods.** Christel Hunter. 15 minutes. Verbal presentation only.

ii. **Proposed Reorganization of NEC®.** Larry Ayer. Approximately 30 minutes including Q&A. Presentation attached.

7. **Other Business.** There was no other business taken up by the CMP.

8. **Future meetings.** The next committee meeting will be October 14-26/2024. A meeting notification will be posted at www.nfpa.org/70next when the meeting is scheduled.

9. **Adjournment.** The meeting was adjourned at 4:13 PM on 1/24/2024.

Attendees

Committee Members:

✓	**Robert Jones**	Chair	IEC, Inc.
	Richard Anderson	Principal	Building Industry Consulting Services
	Douglas Bassett	Principal	Electronic Security Association
	James Broussard	Principal	Steel Tube Institute of America
✓	**Steven Burlison**	Principal	Electric Light & Power Group/EEI
✓	**Shane Clarey**	Principal	Automatic Fire Alarm Association, Inc.
✓	**Michael Cogbill**	Principal	Custom Electronic Design & Installation
✓	**Raymond Horner**	Principal	NEMA
✓	**Donald Iverson**	Principal	Schneider Electric
✓	**Chad Jones**	Principal	Cisco Systems
✓	**Kyle Krueger**	Principal	NECA
✓	**Patrick Mahoney**	Principal	NFPA Electrical Inspection Section
✓	**Timothy Mikloiche**	Principal	IAEI
	Steven Owen	Principal	Associated Builders & Contractors
✓	**David Pace**	Principal	American Chemistry Council
✓	**Samuel Rowkowski**	Principal	Maddox Electric Company, Inc.
	William Szeto	Principal	IEEE-IAS/PES JTCC
✓	**Anthony Tassone**	Principal	UL Solutions
✓	**Ronald Tellas**	Principal	Communications Cable & Connectivity
✓	**Daniel Van Sickle**	Principal	IBEW
✓	**George Zimmerman**	Principal	Ethernet Alliance
✓	**Louis Alvarez**	Alternate	IBEW
	James Conrad	Alternate	NEMA
✓	**Adam Corbin**	Alternate	IEC, Inc.

✓	**Ken Erdmann**	Alternate	Custom Electronic Design & Installation
✓	**Joel Goergen**	Alternate	Cisco Systems
✓	**David Hendershot**	Alternate	NECA
✓	**Ryan Jackson**	Alternate	Steel Tube Institute of North America
✓	**Ward Judson**	Alternate	Building Industry Consulting Services
✓	**Scott Lewis**	Alternate	Electric Light & Power Group/EEI
✓	**John Lupacchino**	Alternate	Associated Builders and Contractors
	Chad Maddox	Alternate	Maddox Electric Company, Inc.
✓	**Thomas Parrish**	Alternate	Automatic Fire Alarm Association
✓	**Mohinder Sood**	Alternate	IAEI
✓	**Paul Vanderlann**	Alternate	UL Solutions
✓	**Keith Waters**	Alternate	Schneider Electric
	Carl Wetterhan	Alternate	Communications Cable & Connectivity
✓	**Barry Chase**	Staff	NFPA

Guests

1. Trevor Bowmer — Alliance for Telecommunications Industry Solutions (ATIS)
2. Brian Deacy — Atkore
3. Brian House — Mike Holt Enterprises
4. Jeff Beaver — NECA
5. John McCamish — Eaton
6. Erik Hohengasser — NFPA staff
7. William Schaumann — Burns & McDonnell
8. Bryan Holland — NEMA
9. Mike Weaver — NECA
10. George Bish — RPI
11. Tim McClintock — NFPA
12. Glenn Liubakka — EZ Electrical
13. Casey Granata — NEMA
14. Larry Ayer — IEC, Inc.
15. Jacob Riddle — Self
16. Gabe Smith — IBEW
17. Stephen Lipster — SNAG
18. Kim Cervantes — NFPA staff
19. Jenna Vittorioso — NFPA staff
20. Christel Hunter — Cerrowire
21. Randy Hunter — Hunter Technical Services
22. Eddie Rodriguez — IEC, Inc.
23. Gilbert Soliz — IEC, Inc. Gulf Coast Chapter
24. Morgan McCandless — Cisco Systems

Total number in attendance: 54

NEC® Code-Making Panel _3__ First Draft Chair Report

Signature: Robert A. Jones

Date of Meeting: January 21, 2024, though January 24, 2024

1. List names of NEC® Code-Making Panel Members in Attendance:
   See Attendance Roster

2. List names of Guests in Attendance:
   See Attendance Roster

3. List names of Guests who addressed the Panel, the subject of their presentation and the length of time they spoke:
   Larry Ayer - Restructuring of the NEC - 30 minutes

   Christel Hunter - Damaged conductors and Wiring Methods - 15 minutes

4. Number of Public Inputs/Comments acted upon: **295**

5. Number of First/Second Revisions Created: **115**

6. List any Task Groups appointed to work subsequent to the First/Second Draft Meeting, along with the names of Task Group Chair/members:
   Same Task Groups for Public Comments

7. List any Public Input/Comment or First/Second Revision that may need to be referred to another Panel for information or correlation:
   CMP 11 may need to look at PI 1429 and PI 4257 for possible conflict.

8. List any Public Input/Comment that requires NEC® Correlating Committee attention:
   PIs 1690,1694, 1695, 1698, 1701 were Resolved and the consensus of the panel was that "qualified person" should be addressed in Chapter 1 and apply to all installations.

   Global PI 3099 needs to be addressed by The NEC Correlating Committee to provide clear instructions to the CMPs.

   Global PI 4050 needs to be addressed by The NEC Correlating Committee to provide clear instructions to the CMPs.

9. List any general requests for information or assistance from the NEC® Correlating Committee:
   Microphones would be very helpful during the panel meeting.

10. List any issues that should be brought to the attention of the NFPA Research Foundation:

11. List any additional information that would be helpful to the NEC® Correlating Committee, NFPA Staff, or process in general:
Barry Chase did an outstanding job working with CMP 3. He was able to keep the meeting on track while juggling multiple screens and documents. I do not know how he did it and his effort was very impressive.

CMP 3 again had a very heavy workload for this First Draft meeting. Thank you to all Panel 3 members for participating in the task groups and recommending actions to be taken on the Public Inputs. I am deeply grateful for Chad Jones and Samuel Rokowski for putting in the extra effort necessary to chair the CMP 3 Task Groups.

Jeffery Sargent has always been very supportive and willing to discuss issues. It has been a pleasure to work with Jeff and he is a great asset to NFPA.

Thanks to the Correlating Committee, particularly Chairman Larry Ayer, for presenting very clear information regarding the restructuring of the NEC. The presentation of information to individual panels and task groups was very beneficial during this revision process.

2026 NEC® Public Input Task Group Report

CMP #	Code Making Panel 3
TG#	Task Group #1, Article
TG Chair	Samuel Rokowski
TG Members	Anthony Tassone, Chad Maddox, Christopher Pavese, David Pace, Donald Iverson, Douglas Bassett, George Zimmerman, James Broussard, John Lupacchino, Kyle Krueger, Mohinder P. Sood, Raymond Horner, Rebecca Templet, Richard Anderson, Robert Jones, Ron Tellas, Ryan Jackson, Shane Clary, Steve Burlison, Steven Owen, Thomas J. Parrish, Ward Judson, William Szeto

Article/Section	**Public Input #**	**PI Report Page #**	**TG Recommendation & Statement**
Global	3085		First Revision. Panel statement: Renumber Articles for the purpose of reserving section .2 for listing and section .3 for refurbished equipment.
Global	3086		Resolve. Panel Statement: This is an issue that needs to be addressed by The NEC Correlating Committee to provide clear instructions to the CMPs.
Global	3099		No action taken by CMP3 on this preferred Global.
Global	4050		No action taken by CMP3 on this preferred Global.
Global	4075		No action taken by CMP3 on this preferred Global.
Global	4287		No action taken by CMP3 on this preferred Global.
Global	3085	1	FR. Article 335
Global	4389		Resolved.

Important Notice: This document has been provided in Microsoft Word format for the purpose of NEC® Code-Making Panel Task Group work. This document is the property of the National Fire Protection Association (NFPA), and may not be used for any other purpose or distributed to any other persons or parties outside of the NEC® Code-Making Panels.

2026 NEC® Public Input Task Group Report

CMP #	Code Making Panel 3
TG#	Task Group #1
TG Chair	Samuel Rokowski
TG Members	Anthony Tassone, Chad Maddox, Christopher Pavese, David Pace, Donald Iverson, Douglas Bassett, George Zimmerman, James Broussard, John Lupacchino, Kyle Krueger, Mohinder P. Sood, Raymond Horner, Rebecca Templet, Richard Anderson, Robert Jones, Ron Tellas, Ryan Jackson, Shane Clary, Steve Burlison, Steven Owen, Thomas J. Parrish, Ward Judson, William Szeto

Article/Section	**Public Input #**	**PI Report Page #**	**TG Recommendation & Statement**
Definition	3400	78	FR TG 1-1. Cable Tie. A band or length of material, employing a locking device, used for bundling, securing, and/or supporting cable, flexible conduit, or flexible tubing. ~~Informational Note No. 1: See ANSI/UL 62275, Cable Management Systems-Cable Ties for Electrical Installations, for Type designations and additional information.~~ Informational Note No. 1: The following are cable tie and cable tie fixing device Type designations. Type(s) 1, 11, 2, 21, 2S, or 21S are evaluated for use in cable management applications. Type(s) 2S or 21S are also evaluated for securing and supporting cable, flexible conduit, and flexible tubing. The increased usage of cables due to limited energy systems necessitates a clear understanding of terms used for cable support. FR TG 1-2. The first informational note was relocated to Annex A, in accordance with Section 2.1.10.5 of the 2023 NEC Style Manual, which states "General standard references for listing or certification shall only be included in Annex A."

Important Notice: This document has been provided in Microsoft Word format for the purpose of NEC® Code-Making Panel Task Group work. This document is the property of the National Fire Protection Association (NFPA), and may not be used for any other purpose or distributed to any other persons or parties outside of the NEC® Code-Making Panels.

			The first draft definition may not be sufficiently clear, for example, to determine whether Velcro ties fit the definition, or, some specific locking device may be needed.
Definition	3401	79	FR TG 1-3. Cable Tie Fixing Device. A component such as a block or bracket, specifically designed to secure cable tie(s) to a mounting surface. Informational Note No 1~~2~~: The following are cable tie and cable tie fixing device Type designations. Type(s) 1, 11, 2, 21, 2S, or 21S are evaluated for use in cable management applications. Type(s) 2S or 21S are also evaluated for securing and supporting cable, flexible conduit, and flexible tubing. The increased usage of cables due to limited energy systems necessitate a clear understanding of terms used for cable support. Informational note #1 is not accepted because a FR has been made already to move it to Annex A.
Definition	3402	81	FR TG 1-4. Cable Tie Integral Device. A single component, as produced, incorporating a cable tie and a cable tie fixing device that are not separable. ~~Informational Note No. 1: See ANSI/UL 62275, Cable Management Systems-Cable Ties for Electrical Installations, for Type designations and additional information.~~ ~~Informational~~ Note No. 1 ~~2~~: The following are cable tie and cable tie fixing device Type designations. Type(s) 1, 11, 2, 21, 2S, or 21S are evaluated for use in cable management applications. Type(s) 2S or 21S are also evaluated for securing and supporting cable, flexible conduit, and flexible tubing. Panel Statement: The increased usage of cables due to limited energy systems necessitates a clear understanding of terms used for cable support. Informational note #1 is not accepted because a FR has been made already to move it to Annex A.
Definition	1396	83	Resolve. The definition refers to an installation technique, not wiring method. Panel Statement: The definition is not needed. The scope of Article 100 states that it is "not intended to include commonly defined general terms..." The 11th Edition of Webster's Collegiate Dictionary defines the transitive verb

Important Notice: This document has been provided in Microsoft Word format for the purpose of NEC® Code-Making Panel Task Group work. This document is the property of the National Fire Protection Association (NFPA), and may not be used for any other purpose or distributed to any other persons or parties outside of the NEC® Code-Making Panels.

			"fish" as "to pull or draw as if fishing" and specifically uses the example of "fish wires through a conduit." Section 300.4 addresses the matter of concealed spaces finished surfaces adequately.
Definition	4195	87	Resolve. Panel Statement: PI 4195 Resolve Panel statement – Installers and inspectors are aware of the meaning of the term “sleeve”. Chapter 9 Table 1 Notes (2) and (4) are very clear in describing a sleeve and a nipple. Section 90.1 clearly states “This Code is not intended as a design specification or an instruction manual for untrained persons”. This definition would not define “sleeve” when used in conjunction with receptacles such as in sections 555.33(A)(4) and 626.31(C).

Important Notice: This document has been provided in Microsoft Word format for the purpose of NEC® Code-Making Panel Task Group work. This document is the property of the National Fire Protection Association (NFPA), and may not be used for any other purpose or distributed to any other persons or parties outside of the NEC® Code-Making Panels.

2026 NEC® Public Input Task Group Report

CMP#	Code Making Panel 3			
TG#	Task Group #1			
TG Chair	Samuel Rokowski			
TG Members	Anthony Tassone, Chad Maddox, Christopher Pavese, David Pace, Donald Iverson, Douglas Bassett, George Zimmerman, James Broussard, John Lupacchino, Kyle Krueger, Mohinder P. Sood, Raymond Horner, Rebecca Templet, Richard Anderson, Robert Jones, Ron Tellas, Ryan Jackson, Shane Clary, Steve Burlison, Steven Owen, Thomas J. Parrish, Ward Judson, William Szeto			
Article/Section	**Public Input #**	**PI Report Page #**	**TG Recommendation & Statement**	
300.1(A)	2242	88	Resolve. Panel Statement: Many of the requirements in Article 300 and in Chapter 3 apply to subject matter outside of Chapter 3. For example, Chapter 7 and 8 requirements often require compliance with Article 300.	
300.1(A)	713	89	Resolve. Panel Statement: The section is not in conflict with section 90.3. Section 90.3 does not prohibit Chapter 3 requirements from being modified by other Articles in Chapter 3. The text here in no way changes that. Chapter 3 contains many Articles specific to material and installations. For example, Article 398 “Open Wiring on Insulators” is specific to this installation method and could modify general requirements in Article 300.	
300.1(A)	717	90	Resolve.	

Important Notice: This document has been provided in Microsoft Word format for the purpose of NEC® Code-Making Panel Task Group work. This document is the property of the National Fire Protection Association (NFPA), and may not be used for any other purpose or distributed to any other persons or parties outside of the NEC® Code-Making Panels.

			Panel statement: Section 4.1.4 of the 2023 NEC Style Manual prohibits reference to entire articles, certainly referring to the entirety of the rest of the book falls within the spirit of that prohibition. Furthermore, the submitter is incorrect in stating that this contradicts 90.2(D). If 90.2(D) exempts an installation from complying with the NEC, there is no reason to read anything else in the NEC, including this section, because none of it applies.	
300.1(C)	1862	91	FR TG 1-1. Statement: Limiting conduit to trade sizes 6" max is restrictive for electrical installations. Electrical installation 8” inch conduit is commercially available. Contingent on if 8” conduit is listed in for the industry.	
300.3(B)(1)	1066	93	Resolve. Panel statement: Tap conductors are not required to be in parallel. The requirement is for the tap conductor to connect to all of the conductors in the parallel set. Article 300 does not have purview over Article 310. Article 310 covers sizing conductors and outside of the prevue of CMP-3. Conductors being tapped off of tapped conductors do not automatically become paralleled.	
300.3(B)(4)	791	94	FR TG 1-2~~6~~. (4) Column-Width Enclosed ~~Panelboard Enclosures~~ Panelboards. Where an auxiliary gutter runs between a column-width enclosed	

Important Notice: This document has been provided in Microsoft Word format for the purpose of NEC® Code-Making Panel Task Group work. This document is the property of the National Fire Protection Association (NFPA), and may not be used for any other purpose or distributed to any other persons or parties outside of the NEC® Code-Making Panels.

			panelboard ~~enclosures~~ and a pull box, and the pull box includes neutral terminations, the neutral conductors of circuits supplied from the panelboard shall be permitted to originate in the pull box Panel Statement: The auxiliary gutter is an extension of the panelboard's enclosure, not the panelboard itself (the guts). Editorial revisions were made for accuracy.	
300.3(C)	2520	95	First revision. Remote signaling circuits are allowed to occupy the same raceways, enclosures, etc. as class 1 circuits. Panel statement: 300.3(D) is added to allow Remote control and Signaling circuits to occupy the same raceways, enclosures, etc. same manner as Class 1 circuits are permitted by 724.48.	
300.3(C)(1)	3007	97	~~First Revision~~FR TG 1-3. See PIs 3007, 3911, 4143 (1) 1000 Volts ac, 1500 volts dc, Nominal, or Less. (a) Insulation Voltage Rating. Conductors of ac and dc circuits rated 1000 volts ac, 1500 volts dc, nominal, or less shall be permitted to occupy the same equipment wiring enclosure, cable, or raceway. All conductors shall have an insulation rating equal to at least the maximum circuit voltage applied to any conductor within the enclosure, cable, or	

Important Notice: This document has been provided in Microsoft Word format for the purpose of NEC® Code-Making Panel Task Group work. This document is the property of the National Fire Protection Association (NFPA), and may not be used for any other purpose or distributed to any other persons or parties outside of the NEC® Code-Making Panels.

			raceway. (b) Electric-Discharge Lamps. Secondary wiring to electric-discharge lamps of 1000 volts ac, 1500 volts dc, or less, if insulated for the secondary voltage involved, shall be permitted to occupy the same luminaire, sign, or outline lighting enclosure as the branch-circuit conductors. Informational Note No. 1: See 725.136(A) for Class 2 and Class 3 circuit conductors. Informational Note No. 2: See 726.136(A) for Class 4 circuit conductors Informational Note No. 3: See 690.31(B) for photovoltaic source and output circuits.	
300.3(C)(1)	3911	98	See comments on PI 3007.	
300.3(C)(1)	4143	99	See comments on PI 3007.	
300.4	871	100	~~Assign to separate TG with TG1 to look further into the data.~~	
300.4(A)	2220	157	~~Return to.~~FR TG 1-4. Panel Statement. The likelihood of passing through cables and raceways being subject to this physical damage is the same for both wood and metal framing members. There is no requirement to protect a cable or raceway passes through a hole in a metal framing member	
300.4(A)(1)	2218	158	~~Return to.~~ FR TG 1-5.	

Formatted: Not Highlight

Formatted: Not Highlight

Important Notice: This document has been provided in Microsoft Word format for the purpose of NEC® Code-Making Panel Task Group work. This document is the property of the National Fire Protection Association (NFPA), and may not be used for any other purpose or distributed to any other persons or parties outside of the NEC® Code-Making Panels.

			Panel Statement: A cable and raceway passing through a punched-out hole in metal members is subject to penetration by screws or nails and should be protected by a steel plate(s) or bushing(s) at least 1.6 mm (1⁄16 in.) thick.	
300.4(A)(2)	2219	159	~~Return to.~~FR TG 1-6. Panel Statement. A cable and raceway passing through notches in metal members is subject to penetration by screws or nails and should be protected by a steel plate(s) or bushing(s) at least 1.6 mm (1⁄16 in.) thick.	
300.4(D)	1027	160	Resolve. Panel statement – Nails or screws are likely to penetrate cable or raceways within 6 inches either above or below a device box if the 1 ¼" spacing from the nearest edge of the framing member is not maintained. Where this distance cannot be maintained, the cable or raceway shall be protected from penetration by nails or screws by a steel plate, sleeve, or equivalent at least 1.6 mm (1⁄16 in.) thick.	
300.4(D)	1098	161	Resolve. Panel Statement – 300.4(A) addresses cables and raceways through wood members.	
300.4(E)	1422 1830	162	FR TG 1-7~~9~~. (E) ~~Cables, Raceways, or Boxes Installed in or Under Metal-Corrugated~~ Wiring Methods and Materials Beneath Roof Decking.	

Formatted: Not Highlight

Important Notice: This document has been provided in Microsoft Word format for the purpose of NEC® Code-Making Panel Task Group work. This document is the property of the National Fire Protection Association (NFPA), and may not be used for any other purpose or distributed to any other persons or parties outside of the NEC® Code-Making Panels.

			If subject to physical damage, a ~~A~~ cable, raceway, conduit body, or box, installed in exposed or concealed locations under ~~metal-corrugated sheet~~ roof decking, shall be installed to maintain ~~and supported so there is~~ not less than 38 mm (1 1⁄2 in.) separation ~~measured~~ from the lowest surface of the roof decking. ~~to the top of the cable, raceway, or box. A cable, raceway, or box~~ Wiring methods and materials shall not be installed in concealed locations in metal-corrugated, sheet decking–type roof. Informational Note: Roof decking material is often repaired or replaced after the initial raceway or cabling and roofing installation and might be penetrated by screws or other mechanical devices designed to provide “hold down” strength of the waterproof membrane or roof insulating material. Panel Statement for 300.4(E): Wiring methods and materials beneath any roof deck can be damaged by screws used for roofing materials, PV equipment, or other applications, so the types of roof deck that this rule applies to were increased. The language regarding cables, raceways, conduit bodies, etc. were condensed to “wiring methods and materials” to ensure that all components of the installation are afforded the protection required by this section.	

Important Notice: This document has been provided in Microsoft Word format for the purpose of NEC® Code-Making Panel Task Group work. This document is the property of the National Fire Protection Association (NFPA), and may not be used for any other purpose or distributed to any other persons or parties outside of the NEC® Code-Making Panels.

			Exception three was added to address raceways with 2" of concrete encasement. Such an installation is not likely to experience physical damage.	
300.4(E)	1830	163	Resolve. Panel Statement: Addressed both PIs 1422 and 1830 as a first revision.	
300.4(F)	1044	170	Resolve. Panel statement – Article 300 covers general requirements for wiring methods and material. For specific requirements for exposed work, go to the specific Article addressing the material in question. For example, NM Cable is addressed in 334.15 (B) titled "Protection from Physical Damage".	
300.4(G)	2691	171	Resolve. Panel statement – The requirement for bushings to be installed prior to the installation of conductors is to protect the conductors during installation. Damage to conductors can occur while the conductors are being installed. While the wire puller is installed, it acts as a bushing to protect the conductors during installation.	
New Section after 300.4(H)	3471	172	Resolve Panel Statement: The prescriptive requirements submitted for running boards were not substantiated and could result in requirements that are not necessary for every installation. This is best left to the AHJ to decide on a case-by-case basis.	

Commented [CS1]: Task Group recommend to Resolve with Panel Statement

Important Notice: This document has been provided in Microsoft Word format for the purpose of NEC® Code-Making Panel Task Group work. This document is the property of the National Fire Protection Association (NFPA), and may not be used for any other purpose or distributed to any other persons or parties outside of the NEC® Code-Making Panels.

			~~Resolve? See Associated PI 3864. Running board is not a current definition and it's difficult to place requirements for wiring installation on running boards. Seems defining the running board is the first step. Leave to the TG.~~	
New Section after 300.4(H)	4146	173	Resolve. Panel statement – Seismic bracing requirements are important but are best left to the building codes and standards like ASCE 7. ~~Resolve.~~ ~~Panel statement – This requirement would be part of the installation instructions for listed seismic equipment and already addressed by the NEC in 110.3(B).~~	
300.4(H)	1043	182	~~Re~~ Resolve. Panel statement – The PI does not comply with the requirements in 4.3.4(c) of NFPA's *Regulations Governing the Development of NFPA Standards* as it does not include legislative text.~~solve.~~ ~~Panel statement – No changes to existing text have been submitted.~~	
300.4(H)	1423	183	Resolve. Panel statement – Listed expansion/deflection fittings are required therefore they must be installed in accordance with 110.3(B).	
300.5(A)	1616	184	Resolve. ~~The PI requests to remove locations of wire methods for clarity. I think it adds work and has no safety value. Ex. 18 trench or encased concrete under a building? The burial depth has always been based on asphalt, pavement, and~~	

Commented [CS2]: Task Group recommend to Resolve with Panel statement

Commented [CS3]: Task Group recommend to resolve with Panel statement.

Formatted: Not Highlight

Important Notice: This document has been provided in Microsoft Word format for the purpose of NEC® Code-Making Panel Task Group work. This document is the property of the National Fire Protection Association (NFPA), and may not be used for any other purpose or distributed to any other persons or parties outside of the NEC® Code-Making Panels.

			~~concrete repair equipment to ensure conduits are not destroyed in the process from my understanding.~~ Panel Statement: The submitter's concerns regarding depth beneath an airport runway are typically addressed by the engineering of the runway itself. The remainder of this PI does not add clarity.	
300.5(A)	2268	189	Resolve. Panel statement: Concrete slabs are not typically repaired or redone on a scheduled basis. If they are, it's typically not with heavy equipment. If the building is removed, power would be de-energized prior to demolition.	
300.5(A)	3078	193	Resolve. ~~EMT is listed to provide protection from physical damage but remains in column with nonmetallic raceways. I'd say nonmetallic raceways cover schedule 40 and 80.~~ Panel Statement: Although Schedule 80 PVC and RTRC-XW are permitted for physical damage protection, they are not equivalent to RMC or IMC. EMT is listed to provide protection from physical damage but remains in column with nonmetallic raceways.	
300.5(D)(3)	1858 And 2193 - Tabled	197	TG FR 1-8. ~~First revision.~~ (See PI 2193) TG to decide. (3) Service Conductors and ~~Service~~ Raceways . Underground service conductors and ~~service~~ raceways that are not encased in concrete and that are buried 450 mm (18 in.) or more below grade shall have their location	Tabled until future meeting

Formatted: Font: (Default) +Body (Calibri)

Important Notice: This document has been provided in Microsoft Word format for the purpose of NEC® Code-Making Panel Task Group work. This document is the property of the National Fire Protection Association (NFPA), and may not be used for any other purpose or distributed to any other persons or parties outside of the NEC® Code-Making Panels.

			identified by a warning ribbon that is placed in the trench at least 300 mm (12 in.) above the underground installation. Comment: The second "service" is not needed IMO. Makes it more readable.	
300.5(D)(3)	2193 See Above	198	(See PI 1858) TG to make motion on recommendation between the two. (3) Service Conductors. Underground direct buried service conductors or underground raceways containing service conductors that are not encased in concrete and that are buried 450 mm (18 in.) or more below grade shall have their location identified by a warning ribbon that is placed in the trench at least 300 mm (12 in.) above the underground installation.	See Above*
300.5(G)	2052	199	FR TG 1-9 First Revision Raceways through which moisture might contact live parts shall be sealed or plugged at either or both ends. Spare or unused raceways shall also be sealed. Sealants shall be identified for use with the cable insulation, conductor insulation, bare conductor, shield, or other components. Panel Statement: A conduit is a raceway. Extra terminology isn't required.~~Resolve. A conduit is a raceway. Extra terminology isn't required.~~	
300.5(J)	1268	200	Resolve	

Commented [CS4]: Task Group recommend to create a First Revision

Important Notice: This document has been provided in Microsoft Word format for the purpose of NEC® Code-Making Panel Task Group work. This document is the property of the National Fire Protection Association (NFPA), and may not be used for any other purpose or distributed to any other persons or parties outside of the NEC® Code-Making Panels.

			Panel statement – "see" is not an enforceable term and cannot be used in this section.	
300.5(J)	1999	201	~~First Revision~~FR TG 1-10 **(J) Earth Movement.** Where direct-buried conductors, raceways, or cables are subject to movement by settlement or frost, direct-buried conductors, raceways, or cables shall be arranged so as to prevent damage to the enclosed conductors, raceways, or to equipment connected to the raceways. Informational Note: This section recognizes "S" loops in underground direct burial cables and conductors to raceway transitions, expansion fittings in raceway risers to fixed equipment, and, generally, the provision of flexible connections to equipment subject to settlement or frost heaves. Panel statement – The revised text makes it clear that raceways shall be protected from damage due to earth movement.	
300.6	1045	202	Resolve. Panel statement – Protection of concrete encased electrodes is under the purview of CMP 5. The submitter is encouraged to pursue this in Article 250 if they desire.	
300.7(A)	3942	204	~~First Revision.~~FR TG 1-11 (A) Condensation. Where portions of a raceway or sleeve are known to be subjected to	

Formatted: Underline

Important Notice: This document has been provided in Microsoft Word format for the purpose of NEC® Code-Making Panel Task Group work. This document is the property of the National Fire Protection Association (NFPA), and may not be used for any other purpose or distributed to any other persons or parties outside of the NEC® Code-Making Panels.

			different temperatures, and where condensation is known to be a problem, as in cold storage areas of buildings or where passing from the interior to the exterior of a building, the raceway or sleeve shall be one of the following (1) Sealed to prevent the circulation of warm air to a colder section of the raceway or sleeve. Sealants shall be identified for use with cable insulation, conductor insulation, a bare conductor, a shield, or other components. An explosionproof seal shall not be required for this purpose, or (2) **Other Approved Means.** The use of a fitting or other approved means identified for the purpose of preventing condensation shall be permitted. Informational Note: An example of a fitting identified for the prevention of condensation could be a thermal break coupling. Panel statement – List item two is added to recognize another method for preventing the buildup of condensation on the inside and the outside of the conduit especially in food processing facilities.	
300.7(B)	1424	205	Resolve. Panel Statement - Listed expansion/deflection fittings are required therefore they must be	

Formatted: Indent: Left: 0.42", Space Before: Auto, After: 6 pt

Formatted: Font: (Default) +Headings (Calibri Light)

Important Notice: This document has been provided in Microsoft Word format for the purpose of NEC® Code-Making Panel Task Group work. This document is the property of the National Fire Protection Association (NFPA), and may not be used for any other purpose or distributed to any other persons or parties outside of the NEC® Code-Making Panels.

			installed in accordance with 110.3(B).	
300.8	2028	206	~~First Revision~~FR TG 1-12 300.8 Installation of Conductors With Other Systems. Raceways or cable trays containing electrical conductors or cables shall not contain any pipe, tube, or equal other means for steam, water, air, gas, drainage, or any service other than electrical. Panel statement – Adding "or cables" makes it clear the no other foreign equipment can be in a raceway or cable tray with electrical conductors or cables.	
300.9	2051	207	Resolve. Panel statement - Requirements such as 225.22 and 312.2 address this issue adequately.	
300.9	3658	208	Resolve. Panel Statement: This issue is adequately covered in other sections of the code, such as 225.22.	
300.10	187	209	Resolve. The added language adds no value. When conduits pass through enclosures, they do no terminate to them, they only require support, not to be secured. A conduit passing through an enclosure is supported.	
300.10	3080	210	First revision TG 1-13~~14~~. Panel Statement: The term "effective ground fault current path" is defined in Article 100 and is the appropriate term here. The reference to 250.4(A)(5), however, is not necessary.	

Important Notice: This document has been provided in Microsoft Word format for the purpose of NEC® Code-Making Panel Task Group work. This document is the property of the National Fire Protection Association (NFPA), and may not be used for any other purpose or distributed to any other persons or parties outside of the NEC® Code-Making Panels.

			The proposed deletion of "short sections" of raceways is not accepted, as unlimited lengths of raceways that are not bonded could prove to be a safety hazard. 300.10 Electrical Continuity of Metal Raceways, Cable Armor, and Enclosures. Metal raceways, cable armor, and other metal enclosures for conductors shall be metallically joined together into a continuous electrical conductor and shall be connected to all boxes, fittings, and cabinets to provide ~~effective electrical continuity~~ <u>an effective ground-fault current path</u> Unless specifically permitted elsewhere in this Code, raceways and cable assemblies shall be mechanically secured to boxes, fittings, cabinets, and other enclosures. Exception No. 1: Short sections of raceways used to provide support or protection of cable assemblies from physical damage shall not be required to be made electrically continuous. Exception No. 2: Equipment enclosures to be isolated, as permitted by 250.96(B), shall not be required to be metallically joined to the metal raceway.	
300.10	3081	211	Resolve Panel Statement: As the submitter indicates, a wireway is a raceway. It is therefore not necessary to add "wireway" to the items in the	

Important Notice: This document has been provided in Microsoft Word format for the purpose of NEC® Code-Making Panel Task Group work. This document is the property of the National Fire Protection Association (NFPA), and may not be used for any other purpose or distributed to any other persons or parties outside of the NEC® Code-Making Panels.

			section because it is already included.	
300.10	665	212	First Revision TG1-14~~15~~ Panel statement – The second sentence is relocated to 300.12 because this is a requirement for mechanical continuity and should be addressed in 300.12. **300.10 Electrical Continuity of Metal Raceways, Cable Armor, and Enclosures.** Metal raceways, cable armor, and other metal enclosures for conductors shall be metallically joined together into a continuous electrical conductor and shall be connected to all boxes, fittings, and cabinets to provide effective electrical continuity. ~~Unless specifically permitted elsewhere in this *Code*, raceways and cable assemblies shall be mechanically secured to boxes, fittings, cabinets, and other enclosures.~~ *Exception No. 1: Short sections of raceways used to provide support or protection of cable assemblies from physical damage shall not be required to be made electrically continuous.* *Exception No. 2: Equipment enclosures to be isolated, as permitted by 250.96(B), shall not be required to be metallically joined to the metal raceway.*	

Important Notice: This document has been provided in Microsoft Word format for the purpose of NEC® Code-Making Panel Task Group work. This document is the property of the National Fire Protection Association (NFPA), and may not be used for any other purpose or distributed to any other persons or parties outside of the NEC® Code-Making Panels.

300.11	1516	213	Resolve. Panel statement – Article 300 establishes general requirements for electrical installations. Specific securing and supporting requirements for various types of raceways are contained within the specific article for that type of raceway.	
300.11	1355	214	Resolve. See PI 552.	
300.11	4516	216	Resolve Panel statement – The concerns of the submitter are better addressed by the appropriate Building Codes.	
300.11(A)	1083	218	Resolve. Panel statement – Article 300 establishes general requirements for electrical installations. Specific securing and supporting requirements for various types of raceways are contained within the specific article for that type of raceway.	
300.11(A)	1297 And 2880	220	Resolve. Panel Statement – All support hardware is not listed, the AHJ makes the determination that an electrical installation complies with the NEC. Section 110.3 does not require listing or labeling of equipment, but it does require considerable evaluation for approval.	
300.11(A)	2880	221	Resolve. See 1297.	See 1297
300.11(B)	552 and 1355	222 And 214	First Revision TG 1-15~~16~~ (B) Wiring Systems Installed Above Suspended Ceilings. **Suspended Ceilings.**	

Important Notice: This document has been provided in Microsoft Word format for the purpose of NEC® Code-Making Panel Task Group work. This document is the property of the National Fire Protection Association (NFPA), and may not be used for any other purpose or distributed to any other persons or parties outside of the NEC® Code-Making Panels.

			Wiring shall not be secured to, or be supported by, the ceiling assembly, including the ceiling support wires. Support wires and associated fittings that provide secure support and that are installed in addition to the ceiling grid support wires shall be permitted as the sole support. If independent support wires are used, they shall be secured at both ends. If independent support wires are used, they shall be distinguishable by color, tagging, or other effective means from those that are part of the fire-resistance-rated design. *Exception No 1: A fire-resistance-rated ceiling system shall be permitted to support wiring and equipment that have been tested as part of the fire- resistance-rated assembly.* Informational Note: See ASTM E119, Standard Test Methods for Fire Tests of Building Construction and Materials, for one method of testing to determine fire-resistance rating. *Exception No 2:* *The ceiling system shall be permitted to support branch-circuit wiring and associated equipment if installed in accordance with the ceiling system manufacturer's instructions.* Panel Statement – The requirements for ceilings with a fire-resistance	
300.11(C)	188	223	First Revision TG1-16~~17~~* Panel Statement – The addition of item (4) aligns with 250.102(E) which allows bonding jumpers or	

Important Notice: This document has been provided in Microsoft Word format for the purpose of NEC® Code-Making Panel Task Group work. This document is the property of the National Fire Protection Association (NFPA), and may not be used for any other purpose or distributed to any other persons or parties outside of the NEC® Code-Making Panels.

			conductors and equipment bonding jumpers to be installed inside or outside of a raceway or an enclosure. Furthermore, the word "where" was changed to "if" in multiple locations to comply with the 2023 *NEC Style Manual* section 3.5.4. **(C) Raceways Used as Means of Support.** Raceways shall be used only as a means of support for other raceways, cables, or nonelectrical equipment under any of the following conditions: (1) If the raceway or means of support is identified as a means of support (2) If the raceway contains power supply conductors for electrically controlled equipment and is used to support Class 2 or Class 3 circuit conductors or cables that are solely for the purpose of connection to the equipment control circuits (3) If the raceway is used to support boxes or conduit bodies in accordance with 314.23 or to support luminaires in accordance with 410.36(E)	

Important Notice: This document has been provided in Microsoft Word format for the purpose of NEC® Code-Making Panel Task Group work. This document is the property of the National Fire Protection Association (NFPA), and may not be used for any other purpose or distributed to any other persons or parties outside of the NEC® Code-Making Panels.

			(4) If the raceway is used to support an equipment bonding jumper that is associated with the circuit conductors within the raceway.	
300.11(C)	3896	224	Resolve Panel Statement: The text of 300.11(C)(2) refers to equipment control circuits. Including Class 4 in this list would be inappropriate as they are not generally control circuits. The existing language is self-limiting in the number of cables that can be supported by the raceway because the control circuit must be associated with the power circuit contained in the raceway. By extending this concept to Class 4 circuits, this limiting factor is lost.	
300.11(D)	3409	225	Resolve Panel Statement - Article 300 establishes general requirements for electrical installations. Specific securing and supporting requirements for various types of raceways cable assemblies, boxes, cabinets, and fittings are contained within the specific article for that type of raceway. For instance, refer to 320.30(A) for securing and supporting Type AC cable.	
300.11(D)	2325	226	First Revision TG 1-17~~18~~ (D) Cables and ~~Single~~ Conductors Not Used as Means of Support. Cable and single conductor wiring methods shall not be used as a means of support for other cables,	

Important Notice: This document has been provided in Microsoft Word format for the purpose of NEC® Code-Making Panel Task Group work. This document is the property of the National Fire Protection Association (NFPA), and may not be used for any other purpose or distributed to any other persons or parties outside of the NEC® Code-Making Panels.

			~~single~~ conductors, raceways, or nonelectrical equipment. Panel Statement - Just like cables, single conductors must not be used as a means of support. The word single was deleted from the proposed text to ensure the rule applies to multiple conductors as well.	
300.12	2447	227	Resolve Panel Statement – The proposed exception is too broad. Wireways can be installed in many different locations, and this would give permission for an installer to remove the bottom of a wireway simply because it would be easier than terminating the conduits to the wireway. In many instances the wireway with an open bottom would no longer be an effective enclosure.	
300.12	3038	228	First Revision TG 1-18~~19~~ Panel Statement – Adding "wireway" makes it clear that raceways and cables must secured to a wireway. Adding the second sentence to this section relocates this requirement to this section to recognize this requirement is for mechanical continuity.	
300.12	666	229	Resolve. See PI 3083	See PI 3083
300.13	2195	230	Resolve. Panel Statement – CMP 3 cannot delete this requirement until it is duplicated in another section of the NEC.	
300.13(B)	274	231	Resolve Panel Statement – Duplex Receptacles are required to meet	

Important Notice: This document has been provided in Microsoft Word format for the purpose of NEC® Code-Making Panel Task Group work. This document is the property of the National Fire Protection Association (NFPA), and may not be used for any other purpose or distributed to any other persons or parties outside of the NEC® Code-Making Panels.

			the requirements in UL 498 which is the Standard for Safety for Attachment Plugs and Receptacles. A 15-amp receptacle is evaluated in accordance with its electrical rating which anticipates the installation on a 20-amp branch circuit and the related downstream loads.~~Panel Statement – Receptales are required to meet UL 498 which is the Standard for Safety Attachment Plugs and Receptacles. A 15-amp receptacle will not be damaged by downstream loads when installed on a 20-amp branch circuit.~~	
300.14	2050	232	Resolve Panel Statement – The requirement applies to all conductors and there is no exception for equipment grounding conductors. ~~Enforcement of the Code is the responsibility of the AHJ.~~	
300.14	2054	233	Resolve. Panel statement: "Where the opening to an outlet, junction, or switch point is less than 200 mm (8 in.) in any dimension, each conductor shall be long enough to extend at least 75 mm (3 in.) outside the opening" covers the concern of the PI.	
300.14	3936	234	First Revision TG 1-19~~20~~ 1. **General.** At least 150 mm (6 in.) of free conductor, measured from the point in the box where it emerges from its raceway or cable sheath, shall be left at each outlet, junction, and switch point for splices or the	

Formatted: Outline numbered + Level: 1 + Numbering Style: 1, 2, 3, … + Start at: 1 + Alignment: Left + Aligned at: 0.25" + Tab after: 0.5" + Indent at: 0.5"

Important Notice: This document has been provided in Microsoft Word format for the purpose of NEC® Code-Making Panel Task Group work. This document is the property of the National Fire Protection Association (NFPA), and may not be used for any other purpose or distributed to any other persons or parties outside of the NEC® Code-Making Panels.

			connection of luminaires or devices. The 150 mm (6 in.) free conductor shall be permitted to be spliced or unspliced. 1. **Openings Smaller Than 200 mm (8 in.)**. If the opening to an outlet, junction, or switch point is less than 200 mm (8 in.) in any dimension, each conductor shall comply with the all of the following: 1. Shall have free conductor in accordance with Section 300.14(A). 2. Shall be long enough to extend at least 75 mm (3 in.) outside the opening. Panel Statement – Breaking up 300.14 into a list format will be more user friendly and conform to NEC Style Manual. Breaking up 300.14 into a list item format to facilitate understanding for Code users. In accordance with NFPA Style Manual section 3.5.1.2 additional subdivisions shall be used where multiple requirements can be broken into independent requirements. Additionally, the panel adjusted the title of each new sub-section to reflect when each requirement will be applicable.	
300.15(F)	2690	235	Resolve. See PI 4317.	
300.15(F)	3179	236	Resolve. See PI 4317.	
300.15(F)	4317, 2690,	237	First revision TG 1-20~~21~~	

Formatted: Font: (Default) Times New Roman, Ligatures: None

Formatted: Space After: Auto, Outline numbered + Level: 1 + Numbering Style: 1, 2, 3, … + Start at: 1 + Alignment: Left + Aligned at: 0.25" + Tab after: 0.5" + Indent at: 0.5"

Formatted: Outline numbered + Level: 1 + Numbering Style: 1, 2, 3, … + Start at: 1 + Alignment: Left + Aligned at: 0.25" + Tab after: 0.5" + Indent at: 0.5"

Formatted: List Paragraph, Space Before: Auto, After: Auto, Outline numbered + Level: 1 + Numbering Style: 1, 2, 3, … + Start at: 1 + Alignment: Left + Aligned at: 0.25" + Tab after: 0.5" + Indent at: 0.5"

Formatted: Font: (Default) +Body (Calibri)

Important Notice: This document has been provided in Microsoft Word format for the purpose of NEC® Code-Making Panel Task Group work. This document is the property of the National Fire Protection Association (NFPA), and may not be used for any other purpose or distributed to any other persons or parties outside of the NEC® Code-Making Panels.

	and 3179.		Panel Statement: Clearly identifying that fittings that are used as a pull point shall be accessible after installation clarifies the intent. Removing unless listed for concealment meets the current listing standards. Reiterating the definition for accessibility to wiring methods isn't needed.	
300.15(L)	2654	238	First Revision TG 1-21~~22~~ Panel statement: The change m~~M~~eets the ~~manual of style~~style manual requirement in section 4.1.4.	
300.17	2399	239	~~Resolve.~~First revision TG 1-22~~23~~ 300.17 Number of ~~size of~~ Conductors and Cables in Raceway. The number of conductors and cables in a complete raceway run shall not exceed the allowable percentage fill specified in Table 1, Chapter 9. ~~(A) General. The number and size of conductors and cables in any raceway shall not be more than will permit dissipation of the heat and ready installation or withdrawal of the conductors or cables without damage to the conductors or cables, or to their insulation.~~ ~~(B) Percentage Fill. The number of conductors and cables in a complete raceway run shall not exceed the allowable percentage fill specified in Table 1, Chapter 9.~~ ~~Informational Note: See the following sections of this Code: intermediate metal conduit, 342.22; rigid metal conduit, 344.22; flexible~~	

Formatted: Strikethrough

Formatted: Strikethrough

Formatted: Strikethrough

Important Notice: This document has been provided in Microsoft Word format for the purpose of NEC® Code-Making Panel Task Group work. This document is the property of the National Fire Protection Association (NFPA), and may not be used for any other purpose or distributed to any other persons or parties outside of the NEC® Code-Making Panels.

			~~metal conduit, 348.22; liquidtight flexible metal conduit, 350.22; PVC conduit, 352.22; HDPE conduit, 353.22; RTRC, 355.22; liquidtight nonmetallic flexible conduit, 356.22; electrical metallic tubing, 358.22; flexible metallic tubing, 360.22; electrical nonmetallic tubing, 362.22; cellular concrete floor raceways, 372.22; cellular metal floor raceways, 374.22; metal wireways, 376.22; nonmetallic wireways, 378.22; surface metal raceways, 386.22; surface nonmetallic raceways, 388.22; underfloor raceways, 390.22; fixture wire, 402.7; theaters, 520.6; signs, 600.31(C); elevators, 620.33; audio signal processing, amplification, and reproduction equipment, 640.23(A) and 640.24; Class 1 circuits, 724.3(A); Class 2, Class 3, Class 4, and power-limited fire alarm (PLFA) circuits, 722.3(A); non-power-limited fire alarm (NPLFA) circuits, 760.3(H); and optical fiber cables and raceways, 770.110(B).~~ Panel statement - The reference to Table 1 Chapter 9 is added because 90.3 requires tables to be referenced in order to be enforceable. The Informational Note is deleted because all sections referenced refer back to Table 1 Chapter 9. "Size" is deleted because the size of the conductor is determined by the load being served, not the conduit fill. Panel statement: The code making panel agrees with the public input. The general requirement to make	

Important Notice: This document has been provided in Microsoft Word format for the purpose of NEC® Code-Making Panel Task Group work. This document is the property of the National Fire Protection Association (NFPA), and may not be used for any other purpose or distributed to any other persons or parties outside of the NEC® Code-Making Panels.

			sure the percentage fills in Table 1, Chapter 9 are enforceable and not just an informational note." Revisions to this section satisfy that concern.~~Section 90.3 clarifies that Chapter 9 – Tables are applicable as referenced.~~	
300.17	324	240	First revision TG 1-23~~24~~ **300.24 Bends.** The total degree of bends in any combination of wiring methods used for a single run, shall not exceed 360 degrees between pull points. Informational note: See 110.3(B) if wiring method transitions are made using a fitting. Panel statement: The added text will clarify the requirement to not exceed 360 degrees between pull points, even if you transition to another type of raceway. The text is located in 300.24 to provide consistency with the 3xx.24 sections of other Chapter 3 requirements.	
300.18(A)	3939	245	First revision TG 1-24~~25~~ **300.18 Raceway Installations.** **(A) Complete Runs.** Raceways ~~other than busways, listed manufactured assemblies in accordance with 604.11, or exposed raceways having hinged or removable covers~~ shall be installed complete between outlet, junction, or splicing points prior to the installation of conductors or cables unless permitted by (1)-(6):	

Formatted: Font: (Default) Times New Roman, Ligatures: None

Formatted: Strikethrough

Important Notice: This document has been provided in Microsoft Word format for the purpose of NEC® Code-Making Panel Task Group work. This document is the property of the National Fire Protection Association (NFPA), and may not be used for any other purpose or distributed to any other persons or parties outside of the NEC® Code-Making Panels.

			1. Busways 2. Listed manufactured assemblies in accordance with Section 604.100 3. Exposed raceways having hinged or removable covers 4. A raceway shall be permitted to be initially installed without a terminating connection at the equipment, where required to facilitate the installation of utilization equipment. 5. Prewired raceway assemblies only where specifically permitted in this Code for the applicable wiring method. 6. Short sections of raceways used to contain conductors or cable assemblies for protection from physical damage. ~~Exception: Short sections of raceways used to contain conductors or cable assemblies for protection from physical damage shall not be required to be installed complete between outlet, junction, or splicing points.~~ **(B) Welding.** Metal raceways shall not be supported, terminated, or connected by welding to the raceway ~~unless permitted elsewhere in this Code.~~ Panel statement: The panel has separated section 300.18(A) into a	

Formatted: Strikethrough

Formatted: Space After: Auto

Formatted: Space Before: Auto, After: 6 pt

Formatted: Strikethrough

Formatted: Font: (Default) +Body (Calibri), Strikethrough

Important Notice: This document has been provided in Microsoft Word format for the purpose of NEC® Code-Making Panel Task Group work. This document is the property of the National Fire Protection Association (NFPA), and may not be used for any other purpose or distributed to any other persons or parties outside of the NEC® Code-Making Panels.

			list item format to facilitate understanding for Code users. In accordance with NFPA Style Manual section 3.5.1.2 additional subdivisions shall be used where multiple requirements can be broken into independent requirements. This revision will also allow the exception to be removed and written in positive code text in accordance with Section 2.1.9.1 of the NEC Style Manual. Additionally, there are no metallic raceways designed or listed for welding, so this language was removed. ~~Separating sub sections makes the code more user friendly and meets the manual of style requirements.~~	
300.18(B)	1360	246	Resolve. Panel statement: ~~This~~ The proposed ~~input~~ wording is too broad and covers all types of raceways that have different~~ring~~ securing and supporting requirements.	
New Section After 300.18(B)	2174	247	Resolve. Panel statement: ~~Section 310.15(C)(2) is not in the purview of CMP-3.~~ Spacing between raceways is a requirement related to ampacity adjustment and therefore is appropriate in 310.15, similar to the cable spacing requirements in the same section.	
300.18(B)	2266	248	First revision TG 1-25~~26~~ Panel statement: Removing the verbiage clarifies that conduits shall not be welded.	
300.19(A)	2055	249	First revision TG 1-26~~27~~	

Important Notice: This document has been provided in Microsoft Word format for the purpose of NEC® Code-Making Panel Task Group work. This document is the property of the National Fire Protection Association (NFPA), and may not be used for any other purpose or distributed to any other persons or parties outside of the NEC® Code-Making Panels.

			Panel statement: The PI addresses an issue and creates ~~redundancy~~ consistency with other tables in the code. This makes the code more user friendly.	
300.22(C)(1)	3142	250	Resolve. Panel statement: The ~~section refers to the permitted wiring methods and adds other types of wiring methods are permitted if installed in the appropriate raceways.~~proposed language does not provide clarity.	
300.22	2655	251	First revision TG 1-27~~28~~ Panel statement: Changes to this section were made to satisfy 4.1.4 of the NEC Style Manual.~~The PI adds correlation to the code and makes it more user friendly.~~	
300.25	1037	252	Resolve. Panel statement: The requirements for emergency or legally required standby systems are under the purview of the adopted building code, not the NEC.~~There's no requirement that every light in a stair tower has to be utilized as an emergency fixture. This would also be a separate requirement in an existing section.~~	
300.25	2465	253	Resolve. Panel statement: Not all jurisdictions adopt the IBC and by relation the Life Safety Code. The language as written restricts general wiring from being installed in these locations, but also allows for the AHJ to enforce other adopted rules like the IBC and Life Safety Code if they apply to their jurisdiction.~~This is not~~	

Important Notice: This document has been provided in Microsoft Word format for the purpose of NEC® Code-Making Panel Task Group work. This document is the property of the National Fire Protection Association (NFPA), and may not be used for any other purpose or distributed to any other persons or parties outside of the NEC® Code-Making Panels.

			~~an electrical requirement, but a life safety code requirement. The informational note already leads the reader to that required information.~~	
300.26	1584	254	First revision TG 1-28~~29~~ Panel statement: ~~To provide clear direction to Code users, the language in 300.26(3) is revised to include directions on how to size conductors used for non-power-limited control conductors.~~ The CMP agrees with the revisions that are consistent with the language of TIA 23-8.	
300.26	4257	258	First Revision. TG 1-29~~30~~ ARTICLE 206 Remote-Control and Signaling Circuits. 206.1 Scope. This article provides the general requirements for remote-control and signaling circuits. 206.4 Circuit Classification. Remote-control and signaling circuits shall be classified as either power-limited or non-power-limited and comply with 206.2 (A) through (C). **(A) Class 1 Power-Limited Remote-Control and Signaling Circuits.** Class 1 power-limited remote-control and signaling circuits shall comply with 724.3 through 724.52. **(B) Class 2 and Class 3 Power-Limited Remote-Control and Signaling Circuits.**	

Important Notice: This document has been provided in Microsoft Word format for the purpose of NEC® Code-Making Panel Task Group work. This document is the property of the National Fire Protection Association (NFPA), and may not be used for any other purpose or distributed to any other persons or parties outside of the NEC® Code-Making Panels.

			Class 2 and Class 3 power-limited remote-control and signaling circuits shall comply with 725.3 through 725.160. **(C) Non-Power-Limited Remote-Control and Signaling Circuits.** Non-power-limited remote-control and signaling circuits shall be installed in accordance with 300.2 through 300.25 and comply with 206.2 (C)(1) through (C)(3). **(1) Sizes and Use.** (a) 18 AWG and 16 AWG copper conductors shall be permitted to supply loads that do not exceed the ampacities specified in 402.5. They shall be installed in a raceway, enclosure, or listed cable. (b) 14 AWG copper-clad aluminum conductors shall only be permitted in Type MC cable and Type TC cable. They shall only supply loads not exceeding 8 amperes. (c) Conductors larger than 16 AWG copper or 14 AWG copper-clad aluminum shall not supply loads	

Commented [RJ5]: Continuous loading is not a conductor concern, it is an overcurrent device concern. We then limit the load on the conductor to satisfy the breaker. That is why the exceptions in 210.19 exist.
I understand the correlation issue with 240.4(D), however, so if we need to keep this language we need to also indicate the ampacity for noncontinuous loads. These are control and signaling after all, so I doubt they'll be continuous loads.

Commented [RJ6]: I think we need the 14 AWG language

Important Notice: This document has been provided in Microsoft Word format for the purpose of NEC® Code-Making Panel Task Group work. This document is the property of the National Fire Protection Association (NFPA), and may not be used for any other purpose or distributed to any other persons or parties outside of the NEC® Code-Making Panels.

			greater than the ampacities specified in 310.14, without applying the ampacity adjustment and correction factors specified in 310.15 to the ampacity calculation. (d) Flexible cords shall comply with Article 400, Parts I and II. **(2) Insulation.** (a) Conductor insulation shall be rated for the system voltage and not less than 600 volts. (b) Conductors larger than 16 AWG copper or 14 AWG copper-clad aluminum shall comply with the applicable general requirements for conductors rated up to and including 2000 volt for type designations, insulations, markings, ampacity ratings, and uses in accordance with 310.3, 310.4, 310.6, 310.8, 310.10, and 310.14. (c) Conductors that are 18 AWG copper, 16 AWG copper, or 14 AWG copper-clad aluminum shall be	

Commented [RJ7]: At doesn't change the overcurrent device rating, it changes the ampacity. Once the ampacity is changed (adjusted or corrected) the overcurrent device must protect the wire at the (new) ampacity. This concept is good, it's just in the wrong place. It needs t be in ampacity, not overcurrent protection.

Important Notice: This document has been provided in Microsoft Word format for the purpose of NEC® Code-Making Panel Task Group work. This document is the property of the National Fire Protection Association (NFPA), and may not be used for any other purpose or distributed to any other persons or parties outside of the NEC® Code-Making Panels.

			Type FFH-2, Type KF-2, Type KFF-2, Type PAF, Type PAFF, Type PF, Type PFF, Type PGF, Type PGFF, Type PTF, Type PTFF, Type RFH-2, Type RFHH-2, Type RFHH-3, Type SF-2, SFF-2, Type TF, Type TFF, Type TFFN, Type TFN, Type ZF, or Type ZFF. (d) Conductors with other types and thicknesses of insulation shall be permitted if suitable for Class 1 circuit use. (3) Non-Power-Limited Remote-control and Signaling Circuits with Power-Supply Circuits. a. Non-Power-Limited Remote-control and Signaling Circuit Conductors rated 1000 volts ac, 1500 volts dc, nominal, or less and power-supply circuits shall be permitted to occupy the same cable, enclosure, or raceway without a barrier if all conductors have an insulation rating	

Commented [RJ8]: This can't be right. Using THHN isn't permitted?

Commented [RJ9]: Is this really a thing? Can I go to UL and ask them to list a conductor for Class 1 use? Do we mean something else instead of listed? Maybe "permitted"? And if so, should those types be added to item (c) above?

Important Notice: This document has been provided in Microsoft Word format for the purpose of NEC® Code-Making Panel Task Group work. This document is the property of the National Fire Protection Association (NFPA), and may not be used for any other purpose or distributed to any other persons or parties outside of the NEC® Code-Making Panels.

			equal to at least the maximum circuit voltage applied to any conductor within the enclosure, cable, or raceway, and the equipment powered is functionally associated. Panel statement: Article 206 was created to provide the general requirements for remote control and signaling circuits, particularly nonpower-limited remote-control and signaling circuits. It borrows heavily from Tentative Interim Amendment (TIA) 23-8, issued March 21, 2023. During the 2023 NEC revision process, Article 725 was revised by removing Class 1 circuits and placing them in the new Article 724. Article 724's scope is limited to power-limited remote-control and signaling circuits because the technical requirements for a nonpower-limited remote-control or signaling circuit are nearly identical to those of circuits for electric light and power and including them in Article 724 seemed redundant. Section 300.26 was also created as part of this revision. It points the Code user to Article 725 for Class 2 or Class 3 circuits, and to Article 724 for Class 1 power-limited remote-	

Important Notice: This document has been provided in Microsoft Word format for the purpose of NEC® Code-Making Panel Task Group work. This document is the property of the National Fire Protection Association (NFPA), and may not be used for any other purpose or distributed to any other persons or parties outside of the NEC® Code-Making Panels.

			control and signaling circuits. For nonpower-limited remote-control and signaling circuits, it tells the Code user to use Article 300. Not all of the necessary requirements for nonpower-limited remote-control and signaling circuits can be found in Article 300, however, so a Tentative Interim Amendment was issued to correct the mistake by expanding 300.26. As a result of the TIA, provisions for conductor ampacity and overcurrent protection were added and the problem was solved, at least until the 2026 revision cycle. For the 2026 cycle the text of the TIA was relocated to Chapter 2, as that is a more appropriate location for circuiting requirements. In addition to the relocations, the following changes were made to the TIA text: Several editorial revisions were made to remove unnecessary language, to provide clarity, or to improve readability without changing the technical requirements. Sections 206.4(A) and (B) now reference all of Article 724 and 725, respectively, as simply pointing to 724.3 and 725.3 without requiring compliance with the remainder of the article is not adequate. The allowance for ignoring ampacity adjustment and temperature correction was relocated to 206.4(C)(1)(a) because ampacity adjustment and temperature correction are ampacity concerns, not overcurrent protection concerns. Section 206.4(C)(1)(b) was revised by removing the language about continuous loads. The issue of	

Important Notice: This document has been provided in Microsoft Word format for the purpose of NEC® Code-Making Panel Task Group work. This document is the property of the National Fire Protection Association (NFPA), and may not be used for any other purpose or distributed to any other persons or parties outside of the NEC® Code-Making Panels.

			continuous loads is an overcurrent protection concern and is better handled in 240.4(D). The language regarding "listing" of conductors for Class 1 use in 206.4(C)(d) was revised because conductors are not "listed" for Class 1 use like a Class 2 or Class 3 cable is. The requirements for overcurrent protection formerly found in the TIA version of 300.26(C)(3) were deleted because Article 240 already covers the issue, and that is the correct article to do so. 206.4(C)(3) was added to address separation of nonpower-limited remote-control and signaling circuits from other nonpower-limited circuits, such those used for power and lighting.	
300.26(C)(1)	1418	260	FR TG 1-30 PI 1418: Create FR Revise 206.4(C)(1) as follows: **(A) Non-Power-Limited Remote-Control and Signaling Circuits.** Non-power-limited remote-control and signaling circuits shall be installed in accordance with 300.2 through 300.25 and comply with 206.2 (C)(1) through (C)(3). **(1) Sizes and Use.** (a) 18 AWG copper and 16 AWG copper or copper-clad aluminum conductors shall be permitted to supply loads that do not exceed the ampacities	

Important Notice: This document has been provided in Microsoft Word format for the purpose of NEC® Code-Making Panel Task Group work. This document is the property of the National Fire Protection Association (NFPA), and may not be used for any other purpose or distributed to any other persons or parties outside of the NEC® Code-Making Panels.

			specified in 402.5. They shall be installed in a raceway, enclosure, or listed cable. (b) 14 AWG copper-clad aluminum conductors shall only be permitted in Type MC cable and Type TC cable. They shall only supply loads not exceeding 8 amperes. (c) Conductors larger than 16 AWG copper or ~~14 AWG~~ copper-clad aluminum shall not supply loads greater than the ampacities specified in 310.14, without applying the ampacity adjustment and correction factors specified in 310.15 to the ampacity calculation. (d) Flexible cords shall comply with Article 400, Parts I and II. Panel Statement: The minimum size permitted for copper-clad remote-control and signaling conductors has been expanded as a result of the technical substantiation provided by public inputs 1418 and 1427.	
300.26(C)(1)	1427	272	FR TG 1-31 PI 1427: Create FR Revise 206.4(C)(2) as follows:	

Important Notice: This document has been provided in Microsoft Word format for the purpose of NEC® Code-Making Panel Task Group work. This document is the property of the National Fire Protection Association (NFPA), and may not be used for any other purpose or distributed to any other persons or parties outside of the NEC® Code-Making Panels.

			(A) Non-Power-Limited Remote-Control and Signaling Circuits. Non-power-limited remote-control and signaling circuits shall be installed in accordance with 300.2 through 300.25 and comply with 206.2 (C)(1) through (C)(3). **(2) Insulation.** (a) Conductor insulation shall be rated for the system voltage and not less than 600 volts. (b) Conductors larger than 16 AWG copper or ~~14 AWG~~ copper-clad aluminum shall comply with the applicable general requirements for conductors rated up to and including 2000 volt for type designations, insulations, markings, ampacity ratings, and uses in accordance with 310.3, 310.4, 310.6, 310.8, 310.10, and 310.14. (c) Conductors that are 18 AWG <u>or larger</u> copper~~, 16 AWG copper, or 14 AWG~~ <u>or</u> copper-clad aluminum shall be Type FFH-2, Type KF-2, Type KFF-2, Type PAF, Type PAFF, Type PF, Type PFF, Type PGF, Type PGFF, Type PTF, Type PTFF, Type RFH-2, Type RFHH-2, Type RFHH-3, Type SF-2, SFF-2, Type TF, Type TFF,	

Important Notice: This document has been provided in Microsoft Word format for the purpose of NEC® Code-Making Panel Task Group work. This document is the property of the National Fire Protection Association (NFPA), and may not be used for any other purpose or distributed to any other persons or parties outside of the NEC® Code-Making Panels.

			Type TFFN, Type TFN, Type ZF, or Type ZFF. (d) Conductors with other types and thicknesses of insulation shall be permitted if suitable for Class 1 circuit use. Panel Statement: The minimum size permitted for copper-clad remote-control and signaling conductors has been expanded as a result of the technical substantiation provided by public inputs 1418 and 1427.	
300.26(C)(3)	1428	273	PI 1428: Resolve Panel Statement: Section 300.26(C)(3) was deleted as a result of First Revision TG 1-30. Please refer to the Panel Statement to that revision for more information	
300.26(C)(3)	3612	274	Resolve. See PI 4257.	

Important Notice: This document has been provided in Microsoft Word format for the purpose of NEC® Code-Making Panel Task Group work. This document is the property of the National Fire Protection Association (NFPA), and may not be used for any other purpose or distributed to any other persons or parties outside of the NEC® Code-Making Panels.

2026 NEC® Public Input Task Group Report

CMP #			
TG#			
TG Chair			
TG Members			
Article/Section	**Public Input #**	**PI Report Page #**	**TG Recommendation & Statement**
Definition	1628, 3132, and 4236	275	FR TG 1-1. Panel statement: The recommendation creates clarity for the user and correlates with other articles.

Important Notice: This document has been provided in Microsoft Word format for the purpose of NEC® Code-Making Panel Task Group work. This document is the property of the National Fire Protection Association (NFPA), and may not be used for any other purpose or distributed to any other persons or parties outside of the NEC® Code-Making Panels.

2026 NEC® Public Input Task Group Report

CMP #	Code Making Panel 3
TG#	Task Group #1, Article
TG Chair	Samuel Rokowski
TG Members	Anthony Tassone, Chad Maddox, Christopher Pavese, David Pace, Donald Iverson, Douglas Bassett, George Zimmerman, James Broussard, John Lupacchino, Kyle Krueger, Mohinder P. Sood, Raymond Horner, Rebecca Templet, Richard Anderson, Robert Jones, Ron Tellas, Ryan Jackson, Shane Clary, Steve Burlison, Steven Owen, Thomas J. Parrish, Ward Judson, William Szeto

Article/Section	Public Input #	PI Report Page #	TG Recommendation & Statement
590	1639	296	Resolve. Panel Statement: "Temporary Wiring" first appeared in the 1971 NEC as Article 305. It remained as Article 305 until the 2002 NEC when it was moved to Article 527 and renamed "Temporary Installations". The 2005 NEC relocated "Temporary Installations" to Article 590. One of the reasons "Temporary Wiring" was relocated to Chapter 5 was that having the requirements for temporary wiring in Chapter 3 was a violation of 90.3 because it does not apply generally to wiring methods. The new structuring of the NEC for the 2029 edition will find an appropriate location for temporary wiring.
590	1642	301	First Revision. Reconditioned Equipment for Temporary Use. Reconditioned electrical equipment that is normally not considered suitable for use in a permanent installation, shall be permitted to be installed and used in a temporary arrangement only if by special permission. Panel Statement: This will provide latitude for AHJs and installers to use refurbished equipment for temporary installations. XXX.2 has been reserved for the Reconditioning requirements for each Article, so renumbering all the Sections following 590.2 as well as the references throughout the Article.

Important Notice: This document has been provided in Microsoft Word format for the purpose of NEC® Code-Making Panel Task Group work. This document is the property of the National Fire Protection Association (NFPA), and may not be used for any other purpose or distributed to any other persons or parties outside of the NEC® Code-Making Panels.

590.4	165 2769 2977 667~~165~~	306 307 308 309	First Revision. ~~Services. Services shall be installed in conformance with Parts I through VIII of Article 230 , as applicable.~~ Panel Statement: This section was deleted to comply with 4.1.1 of the NEC Style Manual. The requirements of Article 230 already apply via 90.3, so referencing them here is not needed.
~~590.4~~	~~2769~~		
~~590.4~~	~~2977~~		
~~590.4~~	~~667~~		
590.4(B)	2404 166	310 311	First Revision. Panel Statement: The words “as applicable” are added to clarify that only specific overcurrent protection requirements shall apply to specific installations rather than all of those rules applying to every installation. The words "height" and "or limitation" in 590.4(B)(1) are deleted because there is not a building or structure height limitation for Type NM, Type NMC, and Type SE cables
~~590.4(B)~~	~~167~~166		
590.4(C)	~~2080~~ 167 2808 2405 2080		First Revision. Panel Statement: The words “as applicable” are added to clarify that only specific overcurrent protection requirements shall apply to specific installations rather than all of those rules applying to every installation. The words "height" and "or limitation" in 590.4(B)(1) are deleted because there is not a building or structure height limitation for Type NM, Type NMC, and Type SE cables. The word "enclosed" was added to make the text technically correct.
~~590.4(C)~~	~~2080~~		
~~590.4(C)~~	~~2405~~		
590.4(D)	2406	315	First Revision. Panel Statement: Receptacles in wet locations are required to comply with 406.9(B) and Article 590 does not modify this requirement. In accordance with the NEC Style Manual section 4.1.1. general requirements in Chapters 1 through 4 shall not be repeated in other articles of the document.
590.4(D)(2)	1499	316	Resolve. Panel Statement: A first revision has been developed to remove the section.

Important Notice: This document has been provided in Microsoft Word format for the purpose of NEC® Code-Making Panel Task Group work. This document is the property of the National Fire Protection Association (NFPA), and may not be used for any other purpose or distributed to any other persons or parties outside of the NEC® Code-Making Panels.

590.4(F)	2302 637	317 318	First Revision: (F) Lamp Protection. All lamps for general illumination shall be protected from accidental contact or breakage by a ~~suitable luminaire or lampholder with a~~ guard. ~~Metal guarded sockets shall not be used unless the metal guard is~~ Metal guards of ~~socket~~ lampholders and metal guards secured to conductive enclosure parts shall be connected to the circuit equipment grounding conductor. Exception: A guard shall not be required for non-replaceable LED lamps integral to a listed temporary lighting string. Panel statement: An exception has been added for not requiring a guard for non-replaceable LED listed temporary strings. The product standard for listing this temporary string is UL 1088. Clarification has been made for metal guards.
~~590.4(F)~~	~~637~~		
590.4(G)	1816	319	First Revision: (G) Splices. A box, conduit body, or other enclosure, with a cover installed, shall be required for all splices. Exception No. 1: On construction sites, a box, conduit body, or other enclosure shall not be required for either of the following conditions: (1) The circuit conductors being spliced are all from nonmetallic multiconductor cord or cable assemblies, provided that the equipment grounding continuity is maintained with or without the box. (2) The circuit conductors being spliced are all from metal-sheathed cable assemblies terminated in listed fittings that mechanically secure the cable sheath to maintain effective electrical continuity. Exception No. 2: On construction sites, branch-circuits that are permanently installed in framed walls and ceilings and are used to supply temporary power or lighting, and that are GFCI protected, the following shall be permitted: (1) A box cover shall not be required for splices installed completely inside of junction boxes ~~with plaster rings~~ , outlet boxes, or device boxes. (2) Listed pigtail-type lampholders shall be permitted to be installed in ceiling-mounted junction boxes ~~with plaster rings~~ outlet boxes, or device boxes.

Important Notice: This document has been provided in Microsoft Word format for the purpose of NEC® Code-Making Panel Task Group work. This document is the property of the National Fire Protection Association (NFPA), and may not be used for any other purpose or distributed to any other persons or parties outside of the NEC® Code-Making Panels.

			(3) Finger safe devices shall be permitted for supplying and connection of devices. Panel Statement: Exception 2 is revised to permit splices that are completely contained inside a junction box, outlet box, or device box with or without a plaster ring.
590.4(J)	2089	323	Resolve. Panel Statement: Extension cord is a common term that is used by most people. The change from "extension cord" to "cord sets" does not add value to the NEC.
590.4(J)	4194	324	First Revision. Panel Statement: In accordance with NFPA Style Manual section 3.5.1.2 breaking up 590.4(J) into a list item format facilitates more user friendly text.
590.6	93 3084	328 330 331 332	First Revision. Receptacle Outlets. Temporary receptacle installations used to supply temporary power to equipment used by personnel during construction, remodeling, maintenance, repair, or demolition of buildings, structures, equipment, or similar activities shall comply with the requirements of 590.6(A)(1) through (A)(3), as applicable. Exception: In industrial establishments only, where conditions of maintenance and supervision ensure that only qualified personnel are involved, an assured equipment grounding conductor program as specified in 590.6(B)(2) shall be permitted for only those receptacle outlets used to supply equipment that would create a greater hazard if power were interrupted or having a design that is not compatible with GFCI protection. Receptacle Outlets Not Part of Permanent Wiring. (1)All 125-volt, single-phase, 15-, 20-, and 30-ampere receptacle outlets that are not a part of the permanent wiring of the building or structure and that are in use by personnel shall have GFCI ~~ground-fault circuit-interrupter~~ protection for personnel. ~~In addition to this required ground-fault circuit-interrupter protection for personnel, listed cord sets or devices incorporating listed ground-fault circuit-interrupter protection for personnel identified for portable use shall be permitted.~~

Important Notice: This document has been provided in Microsoft Word format for the purpose of NEC® Code-Making Panel Task Group work. This document is the property of the National Fire Protection Association (NFPA), and may not be used for any other purpose or distributed to any other persons or parties outside of the NEC® Code-Making Panels.

			(2) Receptacle Outlets Existing or Installed as Permanent Wiring. GFCI protection for personnel shall be provided for all 125-volt, single-phase, 15-, 20-, and 30-ampere receptacle outlets installed or existing as part of the permanent wiring of the building or structure and used for temporary electric power. ~~Listed cord sets or devices incorporating listed ground-fault circuit-interrupter protection for personnel identified for portable use shall be permitted.~~ (3) Receptacles on 15-kW or less Portable Generators. All 125-volt and 125/250-volt, single-phase, 15-, 20-, and 30-ampere receptacle outlets that are a part of a 15-kW or smaller portable generator shall have listed GFCI ~~ground-fault circuit-interrupter~~ protection for personnel. All 15- and 20- ampere, 125- and 250-volt receptacles, including those that are part of a portable generator, used in a damp or wet location shall comply with 406.9(A) and (B). ~~Listed cord sets or devices incorporating listed ground-fault circuitinterrupter protection for personnel identified for portable use shall be permitted for use with 15-kW or less portable generators manufactured or remanufactured prior to January 1, 2015.~~ *Exception to 2: A listed cord set or device incorporating a listed GFCI protection for personnel, identified for portable use shall be permitted for compliance with this section.* *Exception to 3: A Listed cord set or device incorporating a listed GFCI protection for personnel, identified for portable use shall be permitted for compliance with this section where the portable generator was manufactured or remanufactured prior to January 1st, 2015.* Panel Statement: Clarifications were made to the requirements by changing permissive text to exceptions. The acronym "GFCI" has also been used, as it is well understood in the industry.
	2048		Resolve. Panel Statement: Submitter has not offered any technical reasons or substantiation.
	95		Resolve. Panel Statement: Submitter has not offered any technical reasons or substantiation.

Important Notice: This document has been provided in Microsoft Word format for the purpose of NEC® Code-Making Panel Task Group work. This document is the property of the National Fire Protection Association (NFPA), and may not be used for any other purpose or distributed to any other persons or parties outside of the NEC® Code-Making Panels.

	94		Resolve. Panel Statement: Submitter has not offered any technical reasons or substantiation.
590.8(A)	1512		First Revision. Panel Statement: This is an editorial change that will be brought to the editor's attention.
Global	3085		First Revision. Panel statement: Renumber Articles for the purpose of reserving section .2 for listing and section .3 for refurbished equipment.
Global	3086		Resolve. Panel Statement: This is an issue that needs to be addressed by The NEC Correlating Committee to provide clear instructions to the CMPs.
Global	3099		No action taken by CMP3 on this preferred Global.
Global	4050		No action taken by CMP3 on this preferred Global.
Global	4075		No action taken by CMP3 on this preferred Global.
Global	4287		No action taken by CMP3 on this preferred Global.
Global	3085	1	FR. Article 335
Global	4389		Resolved.

Important Notice: This document has been provided in Microsoft Word format for the purpose of NEC® Code-Making Panel Task Group work. This document is the property of the National Fire Protection Association (NFPA), and may not be used for any other purpose or distributed to any other persons or parties outside of the NEC® Code-Making Panels.

2026 NEC® Public Input Task Group Report

CMP #	**3**
TG#	**2**
TG Chair	**Chad Jones**
TG Members	Adam Corbin, Anthony Tassone, Chad Jones, Daniel Raymond Van Sickle, III, David Hendershot, George Zimmerman, James Conrad, Keith Waters, Ken Erdmann, Louis Alvarez, Michael Cogbill, Paul Z. Vanderlaan, Robert Jones, Ron Tellas, Ryan Jackson, Shane Clary, Tim Mikloiche, Ward Judson **Observer Attendees:** Dave Mercier, Don Iverson, Steve Eaves, Bob Voss

Article/Section	Public Input #	PI Report Page #	TG Recommendation & Statement
Definition	823	73	FR TG2-38 *Change (722) to (X22)* *Informational Note: Limited use cables are denoted by an "X" suffix, for example Types CL2X or CMX.* Statement: Limited energy cable installation is consolidated into one article by FR TG2-37, tentatively named X22. This change is noted on this definition to ensure that it is properly renumbered. The informational note was added to give a few examples without potentially confusing the reader that it was an exhaustive list.
Definition	1204	74	FR TG2-1 Delete second sentence of definition, and add the following: Informational note: The design of a Class 2 circuit considers safety from a fire initiation standpoint and provides acceptable protection from electric shock due to its power limitations. Statement: The second sentence of the definition is not a definition. It is appropriate to move it to an informational note. As a circuit cannot consider something, "the design" was added to the front of the informational note.
Definition	3295	75	Resolve.

Important Notice: This document has been provided in Microsoft Word format for the purpose of NEC® Code-Making Panel Task Group work. This document is the property of the National Fire Protection Association (NFPA), and may not be used for any other purpose or distributed to any other persons or parties outside of the NEC® Code-Making Panels.

			Statement: It's unclear that these power sources would meet the listing requirements in 725.60(A). A user of the NEC needs to be sure that a circuit conforms to the NEC requirements and not rely on some informational note saying "they can meet". Further, this public input would be better directed at 725.60, not in the definition.
Definition	1211	76	FR TG2-2 Delete second and third sentence of definition, and add the following: Informational Note: The design of a Class 3 circuit considers safety from a fire initiation standpoint. Since higher levels of voltage and current than a Class 2 circuit are permitted, additional safeguards are specified to provide acceptable protection from electric shock. Statement: The second and third sentences of the definition is not a definition. It is appropriate to move these to an informational note. As a circuit cannot consider something, "the design" was added to the front of the informational note.
Definition	1960	77	FR TG2-3 Statement: The second sentence of the definition is not a definition. It is appropriate to move this to an informational note. As a circuit cannot consider something, "the design" was added to the informational note.726 was deleted from the definition as Class 4 is used in places other than 726. Delete "(726)" from end of definition. Delete second sentence of definition. Add new inf note 2 Informational Note 2: Due to the active monitoring and control of the voltage and current provided, the design of a Class 4 circuit considers safety from a fire initiation standpoint and provides acceptable protection from electric shock.
Definition	1209	82	FR TG2-83

Important Notice: This document has been provided in Microsoft Word format for the purpose of NEC® Code-Making Panel Task Group work. This document is the property of the National Fire Protection Association (NFPA), and may not be used for any other purpose or distributed to any other persons or parties outside of the NEC® Code-Making Panels.

			Statement: It is appropriate to add a definition for Power Limited Circuit. Circuit, Power Limited (Power Limited Circuit) - An electrical circuit that is designed to provide acceptable protection from fire initiation and electrical shock by limiting the amount of power delivered into a fault by the power supply. Informational Note: Power Limited Circuits are not considered "Nominal Standard Voltage" even though they may operate in the same voltage range. (CMP3) Note: track PI 1208 (CMP1) to see what they do with "Prevalent Voltage". Delete IN if necessary.
Definition	3330	84	FR TG2-84 Resolve Statement: It is appropriate to add a definition for Limited Energy System. Limited Energy System – The equipment and cables of an end-to-end system that are power restricted to ensure the energy delivered into any fault provides acceptable protection for fire prevention and electric shock. (CMP3) TENTATIVE: near end of panel meeting, check that we use "limited energy system" and if not, resolve.

Important Notice: This document has been provided in Microsoft Word format for the purpose of NEC® Code-Making Panel Task Group work. This document is the property of the National Fire Protection Association (NFPA), and may not be used for any other purpose or distributed to any other persons or parties outside of the NEC® Code-Making Panels.

2026 NEC® Public Input Task Group Report

CMP #	**3**
TG#	**2**
TG Chair	**Chad Jones**
TG Members	Adam Corbin, Anthony Tassone, Chad Jones, Daniel Raymond Van Sickle, III, David Hendershot, George Zimmerman, James Conrad, Keith Waters, Ken Erdmann, Louis Alvarez, Michael Cogbill, Paul Z. Vanderlaan, Robert Jones, Ron Tellas, Ryan Jackson, Shane Clary, Tim Mikloiche, Ward Judson **Observer Attendees:** Dave Mercier, Don Iverson, Steve Eaves, Bob Voss

Article/Section	Public Input #	PI Report Page #	TG Recommendation & Statement
new section after 398.104	4509	283	Resolve. Statement: Global efforts are being made to relocate all limited energy requirements to a different location. Chapter 3 covers general wiring methods, covering non-power limited installations. These wiring requirements are for limited energy circuits and should have their own location in the code.
Article 722	3673	334	FR TG2-39 Statement: This text has been relocated to new article X22 by FR TG2-37 and can be deleted. 722.31 was not deleted as it is not cable installation text.
new section after 722.3	1690	354	Resolve. Statement: The issue of who installs equipment is best handled at the local level by licensing or similar requirements.
722.3	2945, 31	356, 366	FR TG2-4 Statement: The editorial change made for section to the Style Manual section 4.1.4.
722.3(B) & (C) & (D)	3454	358	FR TG2-22 implemented by TG2-39 Statement: This text has been relocated to new article X00 by FR TG2-21 and can be deleted.
722.3(D)	32	361	FR TG2-43 Statement: The exception to 722.3(D) to specifically allow nonconductive optical fiber cables was deleted to align with 300.22A. The

Important Notice: This document has been provided in Microsoft Word format for the purpose of NEC® Code-Making Panel Task Group work. This document is the property of the National Fire Protection Association (NFPA), and may not be used for any other purpose or distributed to any other persons or parties outside of the NEC® Code-Making Panels.

			specific exception had been inadvertently added during the 2023 reorganization that produced Article 722 and was only implied in prior editions of the NEC.
722.3(F)	4447	363	FR TG2-44 Statement: This section was renumbered by FR TG1-XX which means this reference need to change to 335.10 through 335.120
new section after 722.3(L)	156	364	Resolve Statement: CL2UC and CL3UC do not exist. Therefore, this new text is not required.
722.3(O)	31	366	FR TG2-4 Statement: The editorial change made for section to the Style Manual section 4.1.4.
722.10	3455	368	FR TG2-23 by TG2-39 Statement: This text has been relocated to new article X00 by FR TG2-21 and can be deleted.
722.21	3456	371	FR TG2-24 by TG2-39 Statement: This text has been relocated to new article X00 by FR TG2-21 and can be deleted.
722.24	1687	374	Resolve Statement: This violates 4.1.1 of the style manual.
722.24(A)	1383	376	Resolve. Statement: This article no longer contains specific requirements relating to this subject matter as it is already covered in 110.12.
722.24(A)	17	377	Resolve. Statement: This article no longer contains specific requirements relating to this subject matter as it is already covered in 110.12.
722.24(A)	2009	379	Resolve. Statement: This article no longer contains specific requirements relating to this subject matter as it is already covered in 110.12.
722.24(A)	2486	380	Resolve. Statement: This article no longer contains specific requirements relating to this subject matter as it is already covered in 110.12.
722.24(A)	283	381	Resolve.

Important Notice: This document has been provided in Microsoft Word format for the purpose of NEC® Code-Making Panel Task Group work. This document is the property of the National Fire Protection Association (NFPA), and may not be used for any other purpose or distributed to any other persons or parties outside of the NEC® Code-Making Panels.

			Statement: Article 722 has many varied cable types, not just ones similar to NM cable. The article also includes securing and supporting requirements and it's likely they don't all match 334.30. Therefore, adding this text would create correlation issues.
722.24(A)	3457	382	FR TG2-25 implemented by TG2-39 Statement: This text has been relocated to new article X00 by FR TG2-21 and can be deleted.
722.24(A)&(B)	TG recommends panel to generate		FR TG2-26 Statement: This article no longer contains specific requirements relating to this subject matter as it is already covered in 110.12.
722.24(A)	3796	385	Resolve. Statement: This article no longer contains specific requirements relating to this subject matter as it is already covered in 110.12.
722.24(A)	52	386	Resolve. Statement: This article no longer contains specific requirements relating to this subject matter as it is already covered in 110.12.
722.24(B)	1004	387	Resolve Statement: This text was deleted by FR TG2-26 as redundant text.
722.24(B)	33	388	Resolve. Statement: Article 722 is being expanded to cover all cabling in Chapter 7 and Chapter 8, to include optical fiber cables. As such, the scope of 722 will be expanded.
722.25	3458	390	FR TG2-27 implemented by TG2-39 Statement: This text has been relocated to new article X00 by FR TG2-21 and can be deleted.
722.31	Panel Generated		FR TG2-89 Statement: Removed external reference to 724 and put the requirements from 724 in this text, removing the need for the reader to jump to multiple sections for this limited amount of information. Replace section with: Where damage to power-limited circuits can result in a failure of

Important Notice: This document has been provided in Microsoft Word format for the purpose of NEC® Code-Making Panel Task Group work. This document is the property of the National Fire Protection Association (NFPA), and may not be used for any other purpose or distributed to any other persons or parties outside of the NEC® Code-Making Panels.

			safety-control equipment that would introduce a direct fire or life hazard, all conductors of such circuits shall be installed in rigid metal conduit, intermediate metal conduit, rigid nonmetallic conduit, electrical metallic tubing, Type MI cable, or Type MC cable, or be otherwise suitably protected from physical damage. Room thermostats, water temperature regulating devices, and similar controls used in conjunction with electrically controlled household heating and air conditioning shall not be considered safety-control equipment.
722.135	4391	393	FR TG2-88 Statement: The dwelling unit restriction on Class 4 circuits has been removed in article 726. This adds an installation requirement to ensure limited heating. NOTE: replace 726.144 with X90.50
722.135(A)	2842	399	FR TG2-46 Statement: This text is redundant to 722.179 and has been deleted.
722.135(B)	18	400	FR TG2-47 Statement: The Regulations Governing the Development of NFPA Standards, Section 3.3.6.2 requires that edition dates be included, so the dated reference remains and is updated to the current revision. The referred section is deleted as it is a burden to ensure this doesn't change in the referenced standard each code cycle. "Informational Note No. 1: See NFPA 90A-2024 , *Standard for the Installation of Air-Conditioning and Ventilating Systems*, ~~4.3.4 and 4.3.11.3.3~~ for information…"
722.135(B)	374	405	Resolve. Statement: The requirement is stated in 300.22(B). The charging text says "installation … SHALL comply" with the table, and the table states as described in 300.22(B). Therefore, it is covered. Additionally, 722.3

Important Notice: This document has been provided in Microsoft Word format for the purpose of NEC® Code-Making Panel Task Group work. This document is the property of the National Fire Protection Association (NFPA), and may not be used for any other purpose or distributed to any other persons or parties outside of the NEC® Code-Making Panels.

			(C), exception 1 points directly to the text referred in the substantiation.
722.135(B)	39	410	Resolve. Statement: Article 722 is being expanded to cover all cabling in Chapter 7 and Chapter 8, including communication cable. As such, the scope of 722 will be expanded.
722.135(E)	831	418	Resolve. Statement: Article 722 is being expanded to cover all cabling in Chapter 7 and Chapter 8, to include optical fiber cables. As such, the scope of 722 will be expanded.
722.135(E) & (F)	208	420	FR TG2-48 Statement: An illustration that was lost in the relocation of cable requirements from 725 to 722 in the 2023 cycle is restored.
722.135(I)	2946	424	FR TG2-5 Statement: The editorial change made for section to the Style Manual section 4.1.4.
722.179(A)(4)	35	425	Resolve. Statement: Article 722 is being expanded to cover all cabling in Chapter 7 and Chapter 8, to include optical fiber cables. As such, the scope of 722 will be expanded.
722.179(A)(10)	40	427	Resolve. Statement: Article 722 is being expanded to cover all cabling in Chapter 7 and Chapter 8, to include optical fiber cables. As such, the scope of 722 will be expanded.
722.179(A)(12)	36	429	Resolve. Statement: Article 722 is being expanded to cover all cabling in Chapter 7 and Chapter 8, to include optical fiber cables. As such, the scope of 722 will be expanded.
722.179(A)(13)	37	431	Resolve. Statement: Article 722 is being expanded to cover all cabling in Chapter 7 and Chapter 8, to include optical fiber cables. As such, the scope of 722 will be expanded.
722.179(A)(15)	2971	433	FR TG2-50 Statement: The edit fixes the typographical error in the sentence.
722.179(A)	34	434	Resolve.

Important Notice: This document has been provided in Microsoft Word format for the purpose of NEC® Code-Making Panel Task Group work. This document is the property of the National Fire Protection Association (NFPA), and may not be used for any other purpose or distributed to any other persons or parties outside of the NEC® Code-Making Panels.

			Statement: Article 722 is being expanded to cover all cabling in Chapter 7 and Chapter 8, to include optical fiber cables. As such, the scope of 722 will be expanded.
722.179(B)	2974	436	FR TG2-49 Statement: CL4Z is a new addition to UL 1400-2 and should be added to the Code. does it need added elsewhere?
722.179(B)	38	438	FR TG2-49 Statement: Item (8) is added as it inadvertently wasn't brought forward in the 2023 creation of Article 722. CL4 is added to the table note as CL4 cables can also contain optical fiber. The deletions in the table were not made as Article 722 is being expanded to cover all cabling in Chapter 7 and Chapter 8, to include optical fiber cables. As such, the scope of 722 will be expanded.
722.179(B)	566	443	Resolve. Statement: The proposed language does not improve clarity to the code.
Article 724	3674	445	Resolve. Statement: Article 724 doesn't fit into the definition of Limited Energy and this text was not moved into new article X22.
new section after 724.3	1694	455	Resolve. Statement: The issue of who installs equipment is best handled at the local level by licensing or similar requirements.
724.3, 724.21, 724.24	1489	457	FR TG2-52 Statement: In the 2023 code cycle, when Class 1 was separated out from Article 725, this text was created. Because Article 724 is not independent of Article 300, this is redundant text is covered by 724.46 and 90.3.
724.3(E)	2947	459	FR TG2-6 Statement: The editorial change made for section to the Style Manual section 4.1.4.
new section after 724.21	1692	460	Resolve Statement: This violates 4.1.1 of the style manual as this text is already present in 110.12.

Important Notice: This document has been provided in Microsoft Word format for the purpose of NEC® Code-Making Panel Task Group work. This document is the property of the National Fire Protection Association (NFPA), and may not be used for any other purpose or distributed to any other persons or parties outside of the NEC® Code-Making Panels.

724.24	1384	462	FR TG2-52
724.24	1691	463	Resolve Statement: This violates 4.1.1 of the style manual as this text is already present in 110.12.
724.24	2010	465	FR TG2-52
724.24	2488	466	FR TG2-52
724.24	284	467	Resolve. Statement: Article 724 has many varied cable types, not just ones similar to NM cable. The article also includes securing and supporting requirements and it's likely they don't all match 334.30. Therefore, adding this text would create correlation issues.
724.24	53	468	FR TG2-52
724.24	565	469	FR TG2-52
724.40(A)	2948	470	FR TG2-7 Statement: The editorial change made for section to the Style Manual section 4.1.4.
724.43	1429	471	FR TG2-53 Statement: The minimum size permitted for copper-clad remote-control and signaling conductors has been expanded as a result of the technical substantiation provided by public inputs 1418 and 1427
724.45(B)	564	472	Resolve. Statement: The statement of problem and substantiation do not provide technical justification to delete this text.
724.49	3365	(CMP2 715)	FR TG2-85 Statement: The change aligns the text with the Style Manual, section 4.1.4.
724.49(B)	2521	473	Resolve. Statement: Making this change would create unintended consequences that would require other changes to be made through the document and is therefore is an incomplete solution.
724.52	2949	474	FR TG2-8 Statement: The editorial change made for section to the Style Manual section 4.1.4.
Article 725	3684	475	FR TG2-9

Important Notice: This document has been provided in Microsoft Word format for the purpose of NEC® Code-Making Panel Task Group work. This document is the property of the National Fire Protection Association (NFPA), and may not be used for any other purpose or distributed to any other persons or parties outside of the NEC® Code-Making Panels.

			Statement: This text has been relocated to new article X22 by FR TG2-37 and can be deleted.
new section after 725.3	1695	490	Resolve. Statement: The issue of who installs equipment is best handled at the local level by licensing or similar requirements.
725.3	2950	492	Resolve. Statement: This article no longer contains specific requirements relating to this subject matter as it is already covered in 110.12.
725.3	815	493	Resolve. Statement: This article no longer contains specific requirements relating to this subject matter as it is already covered in 110.12.
725.3, 725.10, 725.21, 725.24, 725.30, 725.31	2506	494	FR TG2-40 Statement: This violates 4.1.1 of the style manual as this text is already present in 722.
725.3(A) & 725.3(B)	3395	496	FR TG2-28 Statement: This text has been relocated to new article X00 by FR TG2-21 and can be deleted. Also, deleted by FR TG2-9 and 40.
725.10, 725.21, 725.24	3396	499	FR TG2-29 Statement: This text has been relocated to new article X00 by FR TG2-21 and can be deleted. Also, deleted by FR TG2-9 and 40.
new section after 725.21	1696	502	Resolve. Statement: This article no longer contains specific requirements relating to this subject matter as it is moved to X00.
725.24	1390	504	Resolve. Statement: This article no longer contains specific requirements relating to this subject matter as it is already covered in 110.12.
725.24	1697	505	Resolve. Statement: This article no longer contains specific requirements relating to this subject matter as it is moved to X00.
725.24	2011	507	Resolve. Statement: This article no longer contains specific requirements relating to this subject matter as it is already covered in 110.12.

Important Notice: This document has been provided in Microsoft Word format for the purpose of NEC® Code-Making Panel Task Group work. This document is the property of the National Fire Protection Association (NFPA), and may not be used for any other purpose or distributed to any other persons or parties outside of the NEC® Code-Making Panels.

725.24	2491	508	Resolve. Statement: This article no longer contains specific requirements relating to this subject matter as it is already covered in 110.12.
725.24	285	509	Resolve. Statement: This article no longer contains specific requirements relating to this subject matter as it is moved to X00.
725.24	3798	510	Resolve. Statement: This article no longer contains specific requirements relating to this subject matter as it is already covered in 110.12.
725.24	4239	511	Resolve. Statement: This article no longer contains specific requirements relating to this subject matter as it is already covered in 110.12.
725.24	54	512	Resolve. Statement: This article no longer contains specific requirements relating to this subject matter as it is already covered in 110.12.
Part II	2505	682	FR TG2-54 Statement: Part II includes equipment requirements and is not just installation. Moving 725.60 into Part I fixes this problem. Part II title is changed to Installation Requirements. (make title change and move part II to AFTER 725.60)
725.60	Panel Generated		FR TG2-45. Statement: FR TG2-82 made a new article X90 that moved 725.60 into that new chapter. Therefore, this texted is deleted for completeness.
725.60(A)	4051	513	Resolve. The only defined term in the list is communications equipment, so if we deleted the undefined terms it would no longer be a list and many things that should be covered would be excluded.
725.60(A)	4285	515	Resolve. The only defined term in the list is communications equipment, so if we deleted

Important Notice: This document has been provided in Microsoft Word format for the purpose of NEC® Code-Making Panel Task Group work. This document is the property of the National Fire Protection Association (NFPA), and may not be used for any other purpose or distributed to any other persons or parties outside of the NEC® Code-Making Panels.

			the undefined terms it would no longer be a list and many things that should be covered would be excluded.
725.60(B)	563	517	Resolve. Statement: The statement of problem and substantiation do not provide technical justification to delete this text.
725.127	428	518	Resolve. Statement: The justification only speaks to Class 2 equipment. Class 3 voltage can be as high as 150V and deliver 100W and therefore would require adhering to the working space requirements. As the comment states, 110.26(A)(1)(b) already exists to allow relaxation of requirements for Low Voltages.
725.130	2951	519	FR TG2-10 Statement: The editorial change made for section to the Style Manual section 4.1.4.
725.136, 725.139	3397	520	FR TG2-30 Statement: This text has been relocated to new article X00 by FR TG2-21 and can be deleted.
725.136(H)	1491	525	FR TG2-58 Statement: Previous versions of the Code only allowed this practice if the circuits were functionally associated. The revision in 2023 removed this requirement, which means any circuit can now be installed in the same raceway as the limited energy circuit.
725.139	2952	526	FR TG2-11 Statement: The editorial change made for section to the Style Manual section 4.1.4. This text has been relocated to new article X00 by FR TG2-21 and can be deleted here.
725.139	817	528	FR TG2-11 Statement: The editorial change made for section to the Style Manual section 4.1.4. This text has been relocated to new article X00 by FR TG2-21 and can be deleted here. Accept all changes EXCEPT the change to (F). The change adds makes the following improvements to the article:

Important Notice: This document has been provided in Microsoft Word format for the purpose of NEC® Code-Making Panel Task Group work. This document is the property of the National Fire Protection Association (NFPA), and may not be used for any other purpose or distributed to any other persons or parties outside of the NEC® Code-Making Panels.

			Addition of Class 4 in the separation requirements. Puts circuits into a listed cable. Removes having conductors alone in enclosure, raceway, or cable. Circuits of same class can coexist in same listed cable. Circuits of different class can coexist in same dual-listed cable. Class 2 and Class 3 can be treated as comm cable in article 800. Class 2 and Class 3 and communications cables can coexist in an overall same listed communications cable. Puts listed Class 2 and 3 cables in same pathways as other Limited Energy (CL2, CL3, CL4, PFLA, communications, OFN, OFC, CATV, coax, low power broadband) listed cables. Addresses (F), but this is incorrect and fixed in PI 1196.
725.139(E)	4033	532	FR TG2-11 Statement: The editorial change made for section to the Style Manual section 4.1.4. This text has been relocated to new article X00 by FR TG2-21 and can be deleted here. Puts limited energy cables in the same pathways (like 817) and removes all the pointers to other places in the NEC by relying on the word, "listed". IS THIS COVERED BY 817?
725.139(F)	1196	533	FR TG2-59 Statement: This change realigns 725.139(F) with 760.139(E), which does not permit audio systems to be installed with PLFA circuits.
725.144(B)	1145	537	Resolve. Statement: Removing the range adds a new complexity where a bundle of 7 can be interpreted to also be covered by a bundle of 19, or 37, or 192. The range makes it explicitly clear where a bundle falls with relation to the table. The title is Maximum Number of 4-Pair

Important Notice: This document has been provided in Microsoft Word format for the purpose of NEC® Code-Making Panel Task Group work. This document is the property of the National Fire Protection Association (NFPA), and may not be used for any other purpose or distributed to any other persons or parties outside of the NEC® Code-Making Panels.

			Cables in a Bundle. There is no mention of minimum size.
725.144	2953	539	FR TG2-12 Statement: The editorial change made for section to the Style Manual section 4.1.4.
Article 726	3686	540	FR TG2-41 Statement: This text has been relocated to new article X22 by FR TG2-37 and can be deleted.
Article 726	Panel generated		FR TG2-67 Statement: The changes correct the titles for UL 1400-1 and 1400-2 and adds the current dated versions.
new section after 726.1	2847	547	FR TG2-55 Statement: The NEC Style Manual Section 2.2.1 states that technical committees shall use the .2 section for listing requirements. See related PIs 2848, 2851, 2852
new section after 726.3	1698	548	Resolve. Statement: The issue of who installs equipment is best handled at the local level by licensing or similar requirements.
726.3	989	550	FR TG2-60 Statement: Changes are made to align with Style Manual section 4.1.4.
726.10	3437	551	FR TG2-31 Statement: This text has been relocated to new article X00 by FR TG2-21 and can be deleted.
new section after 726.12	1699	554	Resolve Statement: This text is covered in article X22.
726.12	4377	556	FR TG2-86 Statement: Dwelling unit installations were prohibited in the 2023 code as FMP was new and the UL listing standards were still under development. The listing standards are now published, and products are making their way to market, building the confidence in the systems. Cable heating has been evaluated with acceptable results for limited bundle sizes with regard to heating or fire initiation concerns.
726.12	4380	557	Resolve

Important Notice: This document has been provided in Microsoft Word format for the purpose of NEC® Code-Making Panel Task Group work. This document is the property of the National Fire Protection Association (NFPA), and may not be used for any other purpose or distributed to any other persons or parties outside of the NEC® Code-Making Panels.

			Statement: FR TG2-86 is the preferred solution.
726.24	1700	559	Resolve. Statement: This article no longer contains specific requirements relating to this subject matter as it is already covered in 110.12.
726.24	2012	561	Resolve. Statement: This article no longer contains specific requirements relating to this subject matter as it is already covered in 110.12.
726.24	2492	562	Resolve. Statement: This article no longer contains specific requirements relating to this subject matter as it is already covered in 110.12.
726.24	3438	572	FR TG2-32 Statement: This text has been relocated to new article X00 by FR TG2-21 and can be deleted.
726.24	55	575	Resolve. Statement: This article no longer contains specific requirements relating to this subject matter as it is already covered in 110.12.
726.121(A)	686	576	FR TG2-61 Statement: Listing requirements are part of a product standard.
726.121	2848	577	FR TG2-61 Statement: The NEC Style Manual Section 2.2.1 states that technical committees shall use the .2 section for listing requirements.
726.121	Panel generated		FR TG2-51 Statement: FR TG2-82 made a new article X90 that moved 726.121 into that new chapter. Therefore, this texted is deleted for completeness. FR TG2-61 and -68 changes are carried forward into X90.
726.124(A)	4410	578	Resolve. Statement: There is one required connectivity requirement in UL 1400-1. The proposed marking is for an optional feature.
726.124(B)(2)	2954	579	FR TG2-13 Statement: The editorial change made for section to the Style Manual section 4.1.4.

Important Notice: This document has been provided in Microsoft Word format for the purpose of NEC® Code-Making Panel Task Group work. This document is the property of the National Fire Protection Association (NFPA), and may not be used for any other purpose or distributed to any other persons or parties outside of the NEC® Code-Making Panels.

			"shall be identified in accordance with 724.30 or Article 725, Part II. "
726.130(A)	2852	580	FR TG2-57 Statement: The NEC Style Manual Section 2.2.1 states that technical committees shall use the .2 section for listing requirements.
726.130(B)	4515	581	FR TG2-57 Statement: The addition of "incompatible" clarifies the intent of the requirement, which could have been confused to allow interchanging with other power limited sources such as Class 2.
726.130(B)	687	582	FR TG2-57 Statement: Adding a hyphen makes it an english word. Non-interchangeability.
726.136, 726.139	3439	583	FR TG2-33 Statement: This text has been relocated to new article X00 by FR TG2-21 and can be deleted.
726.136(D)	4521	587	FR TG2-62 Statement: The revised text makes no changes to requirements but adds clarity.
726.139	818	588	FR TG2-14 Statement: This text has been relocated to new article X00 by FR TG2-21 and can be deleted here. Alignment with 725.139 with PI 817. Multiple CL4 Circuits can coexist in same listed cable. Circuits of CL2/CL4 can coexist in same dual-listed CL2/CL4 cable. Circuits of CL2/CL3/CL4 can coexist in same dual-listed CL3/CL4 cable. (Note: "dual listed" CL2/CL3 is CL3). Circuits of CL2/CL3/CL4 comm can coexist in same dual-listed Communications/CL4 cable.
726.139(C)	2955	590	FR TG2-14 Statement: This text has been relocated to new article X00 by FR TG2-21 and can be deleted here.

Important Notice: This document has been provided in Microsoft Word format for the purpose of NEC® Code-Making Panel Task Group work. This document is the property of the National Fire Protection Association (NFPA), and may not be used for any other purpose or distributed to any other persons or parties outside of the NEC® Code-Making Panels.

726.139(C)	4032	591	FR TG2-14 Statement: This text has been relocated to new article X00 by FR TG2-21 and can be deleted here. Alignment with 725.139 with PI 817. Puts Class 4 listed cables with other 'limited energy' listed cables and removes unnecessary pointers to other sections of NEC. COVERED BY PI 818?
726.144	3997	592	FR TG2-63 Statement: 300.15 is clearly a typo and the proper section for temperature derating of ampacity is 310.15. A maximum bundle size of 10 cables is a reasonable restriction in a dwelling unit.
726.144	4385	593	FR TG2-63 Statement: 300.15 is clearly a typo and the proper section for temperature derating of ampacity is 310.15. A maximum bundle size of 10 cables is a reasonable restriction in a dwelling unit. “No more than 20 current carrying conductors shall be installed without maintaining spacing.”
726.144	557	595	FR TG2-63 Statement: The ampacity of a conductor is the amount of current it can carry. There is no "allowable" ampacity. Changes correct the titles for UL 1400-1 and 1400-2 and adds the current dated versions.
Part III, 726.170	2851	683	FR TG2-56 Statement: The NEC Style Manual Section 2.2.1 states that technical committees shall use the .2 section for listing requirements.
new section after 728.1	2853	596	FR TG2-64 Statement: The NEC Style Manual Section 2.2.1 states that technical committees shall use the .2 section for listing requirements. See related PI 2854

Important Notice: This document has been provided in Microsoft Word format for the purpose of NEC® Code-Making Panel Task Group work. This document is the property of the National Fire Protection Association (NFPA), and may not be used for any other purpose or distributed to any other persons or parties outside of the NEC® Code-Making Panels.

728.3	990	597	FR TG2-65 (delete .3) Statement: This text is redundant to 90.3
728.4	2854	598	FR TG2-66 Statement: this text was relocated to 728.2 by FR TG2-64.
Article 760	3687	599	FR TG2-42 Statement: This text has been relocated to new article X22 by FR TG2-37 and can be deleted. Existing, delete if not necessary: Moves 760.3 (A)-(C), (F)-(I), (K)-(N); 760.10, .21, .24, .25, .130, and .154 to X22
new section after 760.3	1701	619	Resolve. Statement: The issue of who installs equipment is best handled at the local level by licensing or similar requirements. Qualification requirements are located within NFPA 72®.
760.3(A), 760.3(B)	3440	621	FR TG2-34 Statement: This text has been relocated to new article X00 by FR TG2-21 and can be deleted.
760.3(D)	3371	624	FR TG2-69 Statement: Per the Style Manual section 4.1.4 references to entire articles are permitted when required to provide the necessary context. Saying “Elsewhere in the code” is worse than referring to an entire article. These circuits can Class 1, 2, or 3 and the move of Class 1 to Article 724 in the 2023 code requires an update of the reference. “shall comply with Article 724 for Class 1 circuits and Article 725 for Class 2 or Class 3 circuits”
760.3(O)	2956	625	FR TG2-15 Statement: The editorial change made for section to the Style Manual section 4.1.4.
760.10, 760.21, 760.24, 760.25	3441	626	FR TG2-35 Statement: This text has been relocated to new article X00 by FR TG2-21 and can be deleted.

Important Notice: This document has been provided in Microsoft Word format for the purpose of NEC® Code-Making Panel Task Group work. This document is the property of the National Fire Protection Association (NFPA), and may not be used for any other purpose or distributed to any other persons or parties outside of the NEC® Code-Making Panels.

760.24	1702	629	Resolve. Statement: This article no longer contains specific requirements relating to this subject matter as it is already covered in 110.12.
760.24(A)	1391	631	Resolve. Statement: This article no longer contains specific requirements relating to this subject matter as it is already covered in 110.12.
760.24(A)	2017	632	Resolve. Statement: This article no longer contains specific requirements relating to this subject matter as it is already covered in 110.12.
760.24(A)	2493	633	Resolve. Statement: This article no longer contains specific requirements relating to this subject matter as it is already covered in 110.12.
760.24(A)	286	643	Resolve. Statement: This article no longer contains specific requirements relating to this subject matter as it is already covered in 110.12.
760.24(A)	56	644	Resolve. Statement: This article no longer contains specific requirements relating to this subject matter as it is already covered in 110.12.
760.30	866	645	Resolve Statement: NFPA 72® contains the requirements for the labeling of circuits. Existing installations that do not comply to the new proposed requirements could become misunderstood resulting in dangerous situations.
760.32	226	646	Resolve. Statement: Shading is an automated function done through the publication process. The CMP has no control of the formatting aspect of the Code. Additionally, this will no longer be a new item for the 2026 code, so the shading would be removed.
760.32	2957	647	FR TG2-16 Statement: The editorial change made for section to the Style Manual section 4.1.4.
760.33	2959	648	FR TG2-17

Important Notice: This document has been provided in Microsoft Word format for the purpose of NEC® Code-Making Panel Task Group work. This document is the property of the National Fire Protection Association (NFPA), and may not be used for any other purpose or distributed to any other persons or parties outside of the NEC® Code-Making Panels.

			Statement: Changing the title is appropriate as this section is about SPD and not overvoltage. Deleting the article 242 reference is a disservice to the reader as a fire alarm technician may not know the contents of Article 242. The pointer provides a valuable service. The editorial change made for section to the Style Manual section 4.1.4. A requirement to place the SPD as close as practicable is added to ensure protection of the control panel.
760.33	3412	649	FR TG2-17 Statement: Changing the title is appropriate as this section is about SPD and not overvoltage. Deleting the article 242 reference is a disservice to the reader as a fire alarm technician may not know the contents of Article 242. The pointer provides a valuable service. The editorial change made for section to the Style Manual section 4.1.4. A requirement to place the SPD as close as practicable is added to ensure protection of the control panel.
760.35	1259	650	Resolve. Statement: The NEC covers the installation of the equipment (Section 90.2). The scope (Section 1.1.1) of NFPA 72 indicates that the performance of the system is covered by that document. Cybersecurity is a performance concern and is not appropriate in NFPA 70.
760.35	3065	651	FR TG2-71. Statement: The existing text was superfluous and has been deleted. It's not possible to install a fire alarm without already complying to this requirement.
760.35	562	652	FR TG2-71. Statement: The existing text was superfluous and has been deleted. It's not possible to install a fire alarm without already complying to this requirement.
760.41(A)	1496	653	Resolve

Important Notice: This document has been provided in Microsoft Word format for the purpose of NEC® Code-Making Panel Task Group work. This document is the property of the National Fire Protection Association (NFPA), and may not be used for any other purpose or distributed to any other persons or parties outside of the NEC® Code-Making Panels.

			Statement: The requirements for securing fire alarm circuit disconnecting means are found in NFPA 72. This text simply gives and option to secure if that is required.
760.41(B)	3184	654	FR TG2-72 Statement: Multiwire branch circuits often employ common trip functionality allowing one fault on a non-associated circuit to deenergize the fire alarm control panel. This revision eliminates that possibility.
760.41(B)	3292	655	FR TG2-72 Statement: Multiwire branch circuits often employ common trip functionality allowing one fault on a non-associated circuit to deenergize the fire alarm control panel. This revision eliminates that possibility.
760.43	561	656	FR TG2-73 Statement: The exception violates the Style Manual section 4.1.4 by referring to every article and is overly broad.
760.45	2504	657	FR TG2-74 Statement: The existing exception was not a complete sentence and upon further examination, deleting it does not appear to remove any requirements.
760.46	3376	658	FR TG2-75 Statement: The change aligns the text with the Style Manual, section 4.1.4.
760.48(A)	1603	659	Resolve. Statement: The proposal included no text to be incorporated and no technical justification for the change.
760.49(B)	3373	661	FR TG2-76 The change aligns the text with the Style Manual, section 4.1.4.
760.121(B)	1488	662	FR TG2-77 Statement: The exception referred to in the Informational Note was deleted for the 2023 cycle, therefore the exception is deleted.
760.121(B)	1497	663	Resolve Statement: The requirements for securing fire alarm circuit disconnecting means are found

Important Notice: This document has been provided in Microsoft Word format for the purpose of NEC® Code-Making Panel Task Group work. This document is the property of the National Fire Protection Association (NFPA), and may not be used for any other purpose or distributed to any other persons or parties outside of the NEC® Code-Making Panels.

			in NFPA 72. This text simply gives and option to secure if that is required.
760.121(B)	1931	664	Resolve Statement: The requirements for securing fire alarm circuit disconnecting means are found in NFPA 72. This text simply gives and option to secure if that is required.
760.121(B)	560	665	FR TG2-77 Statement: The exception referred to in the Informational Note was deleted for the 2023 cycle, therefore the exception is deleted.
760.127	3082	666	FR TG2- 78 Statement: The first sentence was deleted as compliance with chapters 1 -4 is already required by 90.3. The title was changed to accurately reflect the contents of the section.
760.130	1703	667	FR TG2-18 Statement: The editorial change made for section to the Style Manual section 4.1.4 and section 3.5.1.2.
760.130	2960	668	FR TG2-18 Statement: The editorial change made for section to the Style Manual section 4.1.4 and section 3.5.1.2.
760.133	2961	669	FR TG2-19 Statement: The editorial change made for section to the Style Manual section 4.1.4.
760.136, 760.139	3442	670	FR TG2-36 Statement: This text has been relocated to new article X00 by FR TG2-21 and can be deleted.
760.136(G)	1490	675	FR TG2-20 Statement: Previous versions of the Code only allowed this practice if the circuits were functionally associated. The revision in 2023 removed this requirement, which means any circuit can now be installed in the same raceway as the limited energy circuit. Also, the editorial change made for section to the Style Manual section 4.1.4.
760.136(G)	2962	676	FR TG2-20 Statement: Previous versions of the Code only allowed this practice if the circuits were

Important Notice: This document has been provided in Microsoft Word format for the purpose of NEC® Code-Making Panel Task Group work. This document is the property of the National Fire Protection Association (NFPA), and may not be used for any other purpose or distributed to any other persons or parties outside of the NEC® Code-Making Panels.

			functionally associated. The revision in 2023 removed this requirement, which means any circuit can now be installed in the same raceway as the limited energy circuit. Also, the editorial change made for section to the Style Manual section 4.1.4.
760.139	3923	677	FR TG2-80 Statement: Changes create parallel language to 725.135 and 726.139. The addition allows Class 4 in applications where Class 2 was allowed. **(D) Class 4 Circuits with PLFA Circuits in the Same Cable.** Class 4 circuits shall be permitted in the same cable with power-limited fire alarm circuits if the cable is dual-listed.
760.139	4041	678	FR TG2-80 Statement: Changes create parallel language to 725.135 and 726.139. The addition allows Class 4 in applications where Class 2 was allowed.
760.139	895	680	FR TG2-80 Statement: Changes create parallel language to 725.135 and 726.139. The addition allows Class 4 in applications where Class 2 was allowed.

Article X00
General Requirements for Limited Energy Systems.

X00.1 Scope

This article covers general requirements for limited energy systems. These general requirements apply to Class 2 and Class 3 Power Limited Circuits, Class 4 Fault-Managed Power Systems, Power Limited Fire Alarm Circuits, and Optical Fiber Cables, covered by Articles 725, 726, 760, and 770, and Communications Systems covered by Articles 800, 805, 810, 820, 830 and 840.

X00.3 Other Articles.

Only those sections of Article 300 referenced in this article shall apply.

X00.4 Hazardous Locations.

Cables and equipment shall be permitted to be used in hazardous (classified) locations where specifically permitted by other articles in this *Code.*

X00.5 Spread of Fire or Products of Combustion.

Installation of power-limited circuits shall comply with 300.21.

X00.6 Ducts, Plenums, and Other Air-Handling Spaces.

Circuits installed in ducts, plenums, or other space used for environmental air shall comply with 300.22.

Exception No. 1: Cables selected in accordance with Table 722.135(B) and installed in accordance with 300.22(B), Exception shall be permitted to be installed in ducts specifically fabricated for environmental air.

Exception No. 2: Cables selected in accordance with Table 722.135(B) shall be permitted to be installed in other spaces used for environmental air (plenums).

Exception No. 3: Power-limited fire alarm cables selected in accordance with Table 760.154 and installed in accordance with 722.135 and 300.22(B), Exception, shall be permitted to be installed in ducts specifically fabricated for environmental air.

Exception No. 4: Power-limited fire alarm cables selected in accordance with Table 760.154 and installed in accordance with 722.135 shall be permitted to be installed in other spaces used for environmental air (plenums).

X00.7 Installation of Conductors and Cables with Other Systems.

Installations shall comply with 300.8.

X00.21 Access to Electrical Equipment Behind Panels Designed to Allow Access.

Installations shall comply with 300.23.

X00.24 Mechanical Execution of Work.

The installation shall conform to 300.4 and 300.11.

Exception: Overhead (aerial) spans of communications drop wires, communications cables, and CATV-type coaxial cables shall be permitted to be attached to the exterior of a raceway-type mast intended for the attachment and support of such wires and cables.

Informational Note No. 1: See ANSI/NECA/FOA 301-2016, *Standard for Installing and Testing Fiber Optic Cables*, ANSI/TIA-568.0-D-2015, *Generic Telecommunications Cabling for Customer Premises*, and ANSI/TIA 568.3-D-2016, *Optical Fiber Cabling and Components Standard*, for accepted industry practices.

Informational Note No. 2: See ANSI/BICSI N1-2019, *Installation Practices for Telecommunications and IC Cabling and Related Cabling Infrastructure*; ANSI/TIA-568.1- E-2020, *Commercial Building Telecommunications Infrastructure Standard;* ANSI/TIA-569-E-2019, *Telecommunications Pathways and Spaces;* ANSI/TIA-570-C-2012, *Residential Telecommunications Infrastructure Standard;* ANSI/TIA-1005-A-2012, *Telecommunications Infrastructure Standard for Industrial Premises;* ANSI/ TIA-1179-A-2017, *Healthcare Facility Telecommunications Infrastructure Standard;* ANSI/TIA-4966-2014, *Telecommunications Infrastructure Standard for Educational Facilities;* and other ANSI-approved installation standards for accepted industry practices.

(A) Circuit Integrity (CI) Cable.

Circuit integrity (CI) cable shall be supported at a distance not exceeding 610 mm (24 in.). Cable shall be secured to the noncombustible surface of the building structure. Cable supports and fasteners shall be steel. Where fire alarm circuits are located within 2.1 m (7 ft) of the floor in accordance with 760.53(A)(1) and 760.130(B)(1), as applicable, the cable shall be fastened in an approved manner at intervals of not more than 450 mm (18 in.).

X00.25 Abandoned Cables.

The accessible portion of abandoned cables shall be removed. Where cables are identified for future use with a tag, the tag shall be of sufficient durability to withstand the environment involved.

X00.100 Installation of Conductors of Different Limited Energy Circuits in the Same Cable, Enclosure, Cable Tray, Raceway, or Cable Routing Assembly.

Limited-energy cables shall be of a type indicated in Table X00.100.

Informational Note: Class 1 cables, non-power-limited fire alarm cables, and network-powered broadband medium-power cables are not limited energy cable types.

(A) General. Unless prohibited by this section, plenum, riser, general-purpose, and limited-use limited-energy cables shall be permitted to be installed in the same raceway, cable tray, box, enclosure, or cable routing assembly. Installations shall comply with (B) through (H).

(B) Two or More Class 2, Class 3, or Class 4 Circuits.

Conductors of two or more limited energy circuits of the same class shall be permitted within the same limited energy cable.

(C) Class 2, Class 3, and Class 4 Circuits with the Same Limited Energy Cable.

(1) Class 3 Cables. Class 2 circuits shall be permitted to use listed Class 3 cables.

(2) Dual-Listed Class 3/Class 4 Cables. Class 2 and Class 3 circuits shall be permitted to use dual-listed Class 3/Class 4 cables.

(D) Class 2 and Class 3 Circuits with Communications Circuits.

(1) Communications Cables.

Conductors of one or more Class 2 or Class 3 circuits shall be permitted in the same cable with conductors of communications circuits. The cable shall be listed as a communications cable.

(2) Composite Cables.

Cables constructed of individually listed Class 2, Class 3, and communications cables under a common jacket shall be permitted to be classified and listed as communications cables. The fire resistance rating of the composite cable shall be determined by the combustion characteristics of the composite cable.

(E) Class 2, Class 3, or Class 4 Cables with Other Limited Energy Cables.

(1) Limited-Use Cables. Plenum, Riser, General-Purpose, and Limited Use Limited Energy Cables shall be permitted in the same enclosure or raceway.

(2) Other Than Limited-Use Cables. Plenum, Riser, and General-Purpose Limited Energy Cables shall be permitted in the same enclosure, cable tray, raceway, or cable routing assembly.

(F) Power-Limited Fire Alarm Circuits.

(1) Multiple PLFA Circuits. Cable and conductors of two or more power-limited fire alarm circuits shall be permitted within the same cable, enclosure, cable tray, raceway, or cable routing assembly.

(2) With Network-Powered Broadband. Low-power network-powered broadband communications circuits shall be permitted in the same enclosure, cable tray, raceway, or cable routing assembly with PLFA cables.

(3) With Class 2 Circuits. Conductors of one or more Class 2 circuits shall be permitted within the same cable, enclosure, cable tray, raceway, or cable routing assembly with conductors of power-limited fire alarm circuits if the insulation of the Class 2 circuit conductors in the cable, enclosure, raceway, or cable routing assembly is at least that required by the power-limited fire alarm circuits.

(4) With Class 3 or Communications Circuits. Cable and conductors of Class 3 and communications circuits shall be permitted within the same cable, enclosure, cable tray, raceway, or cable routing assembly with cables and conductors of power-limited fire alarm circuits.

(5) With 4 Circuits. Class 4 circuits shall be permitted in the same cable with power-limited fire alarm circuits if the cable is dual-listed.

(6) Audio System Circuits and PLFA Circuits.

Audio system circuits described in 640.9(C) and installed using Class 2, Class 3, or Class 4 wiring methods in compliance with 722.135 shall not be installed in the same cable, cable tray, raceway, or cable routing assembly with PLFA circuits or cables.

(G) Manholes. Outside plant communications, CATV, and optical fiber cables shall be permitted to be installed together in manholes.

> Informational Note: See Rules 323 and 341 of IEEE C2-2023, National Electrical Safety Code for information on cable installation in manholes.

(H) Limited-Use and Under-Carpet Limited-Energy Cables. Limited-use and under-carpet limited-energy cables shall not be installed in cable trays or cable routing assemblies.

Table X00.100 Limited-Energy Cable Types

Plenum Limited-Energy Cables	CMP	Communications Plenum Cables
	CATVP	Community Antenna Television Plenum Cables
	BLP	Network-Powered Broadband Communications Low-Power Plenum Cables
	FPLP	Power-Limited Fire Alarm Plenum Cables
	CL4P	Class 4 Plenum Cables
	CL3P	Class 3 Plenum Cables
	CL2P	Class 2 Plenum Cables
	OFNP	Nonconductive Optical Fiber Plenum Cables
	OFCP	Conductive Optical Fiber Plenum Cables
Riser Limited-Energy Cables	CMR	Communications Riser Cables
	CATVR	Community Antenna Television Riser Cables
	BLR	Network-Powered Broadband Communications Low-Power Riser Cables
	FPLR	Power-Limited Fire Alarm Riser Cables
	CL4R	Class 4 Riser Cables
	CL3R	Class 3 Riser Cables
	CL2R	Class 2 Riser Cables
	OFNR	Nonconductive Optical Fiber Riser Cables
	OFCR	Conductive Optical Fiber Riser Cables
General-Purpose Limited-Energy Cables	CMG, CM	Communications General-Purpose Cables
	CATV	Community Antenna Television General-Purpose Cables
	BL	Network-Powered Broadband Communications Low-Power General-Purpose Cables
	FPL	Power-Limited Fire Alarm General-Purpose Cables
	CL4	Class 4 General-Purpose Cables
	PLTC	Power-Limited Tray Cables
	CL3	Class 3 General-Purpose Cables
	CL2	Class 2 General-Purpose Cables
	OFNG, OFN	Nonconductive Optical Fiber General-Purpose Cables
	OFCG, OFC	Conductive Optical Fiber General-Purpose Cables
Limited-Use Limited-Energy Cables	CMX	Communications Limited Use Cables
	CATVX	Community Antenna Television Limited Use Cables
	BLX	Network-Powered Broadband Communications Low-Power Limited Use Cables
	CL3X	Class 3 Limited Use Cables
	CL2X	Class 2 Limited Use Cables
Specialty Use Limited-Energy Cables	CMUC	Under-Carpet Communications Wires and Cables

X00.136 Limited-Energy Circuits with Electric Light, Power, Class 1, Non-Power-Limited Fire Alarm, and Medium-Power Network-Powered Broadband Communications Circuits in Raceways, Compartments, and Boxes.

Separation shall be provided in accordance with X00.136(A) for limited energy cables and conductors, except as provided in X00.136(B) for optical fiber cables.

(A) General. Limited energy cables shall be separated by at least 50 mm (2 in.) from conductors of any electric light, power, Class 1, non-power-limited fire alarm, or medium-power network-powered broadband communications circuits and shall not be placed the same raceway, compartment, enclosure, manhole, outlet box, device box, or similar, unless permitted by the following.

Exception: Low-Power and Medium-Power Network-Powered Broadband Communications Circuit Cables shall be permitted in the same raceway, cable tray, box, enclosure, or cable routing assembly.

(1) Separated by Barriers. Limited energy cables shall be permitted to be placed in any raceway, compartment, outlet box, junction box, or other enclosures with conductors of electric light, power, Class 1, non-power-limited fire alarm, or medium-power network-powered broadband communications circuits if the conductors of electric light, power, Class 1, non-power-limited fire alarm, and medium-power network-powered broadband communications circuits are separated from the limited energy and cables by a permanent barrier that maintains the 50 mm (2 in.) separation or a listed divider.

(2) Raceways Within Enclosures. Limited energy cables shall be permitted to share the same enclosure with other systems if the limited energy cables are separated by a raceway within the enclosure.

(3) Associated Systems Within Enclosures. Limited energy cables shall be permitted to be placed in outlet boxes, junction boxes, compartments, or similar with power conductors where such conductors are introduced solely for power supply to the limited energy equipment and X00.136(A)(2)(a) or (A)(2)(b) applies.

(a) The power circuit conductors are be routed within the enclosure to maintain a minimum 6 mm (0.25 in.) separation from the limited energy cables.

(b) The circuit conductors operate at 150 volts or less to ground and the limited energy circuit conductors are either:

1. Installed as a Class 1 circuit.

2. The limited energy cable is CL3, CL3R, CL3P, or a permitted substitute and the conductors that emerge from the cable jacket are separated by a minimum 6 mm (0.25 in.) or by a nonconductive barrier from all other conductors.

(4) Enclosures with Single Opening. Circuit conductors of limited energy cables entering compartments, enclosures, device boxes, outlet boxes, or similar shall be permitted to be installed with Class 1, non-power-limited fire alarm, and medium-power network-powered broadband communications circuits where they are introduced solely to connect the equipment connected to the limited energy circuits. If the limited energy circuit conductors must enter an enclosure that is provided with a single opening, they shall be permitted to enter through a single fitting (such as a tee) if the conductors are separated from the conductors of the other circuits by a continuous and firmly fixed nonconductor, such as flexible tubing.

(5) Elevators.

(a) Traveling Cables. Separation of circuits shall not be required in elevator traveling cables constructed in accordance with 620.36.

(b) Hoistways. In hoistways, cables shall be installed in rigid metal conduit, rigid nonmetallic conduit, intermediate metal conduit, liquidtight flexible nonmetallic conduit, or electrical metallic tubing. For elevators or similar equipment, these conductors shall be permitted to be installed as provided in 620.21.

(6) In Raceways or Cables. Separation shall not be required if either (1) the conductors of electric light, power, Class 1, non-power-limited fire alarm, and medium-power network-powered broadband communications circuits are in a raceway or in metal-sheathed, metal-clad, nonmetallic-sheathed, Type AC or Type UF cables, or (2) the limited energy cable conductors are installed in a raceway or in metal-sheathed, metal-clad, nonmetallic-sheathed, Type TC, or Type UF cables.

(7) Protected by Firmly Fixed Nonconductors. Separation shall not be required if the limited energy cables are permanently separated from the conductors of electric light, power, Class 1, non-power-limited fire alarm, and medium-power network-powered broadband communications circuits by a continuous and firmly fixed nonconductor, such as porcelain tubes or flexible tubing, in addition to the insulation on the wire.

(8) Manholes.

Underground limited energy circuit conductors and cables in a manhole shall be permitted to be installed with Class 1, non-power-limited fire alarm, and medium-power network-powered broadband communications circuits if one of the following conditions is met:

(a) The electric light, power, Class 1, non-power-limited fire alarm, and medium-power network-powered broadband communications circuit conductors are in a metal-enclosed cable or Type UF cable.

(b) The limited energy circuit conductors are permanently and effectively separated from the conductors of other circuits by a continuous and firmly fixed nonconductor, such as flexible tubing, in addition to the insulation or covering on the wire.

(c) The limited energy circuit conductors are permanently and effectively separated from conductors of the other circuits and securely fastened to racks, insulators, or other approved supports.

(9) Cable Trays. Limited energy circuit conductors shall be permitted to be installed in cable trays if the conductors of the electric light, Class 1, and non-power-limited fire alarm circuits are separated by a solid fixed barrier of a material compatible with the cable tray or if the limited energy circuits are installed in Type MC cable.

(10) If Protected. Limited energy circuits shall be permitted to be installed together with the conductors of electric light, power, Class 1, non-power-limited fire alarm, and medium-power network-powered broadband communications circuits if they are functionally associated and installed using Class 1 wiring methods in accordance with 724.46.

(B) Optical Fiber Cables. Hybrid optical fiber cables shall be classified as electrical cables in accordance with the type of electrical conductors. They shall be constructed, listed, marked, and installed in accordance with the appropriate article for each type of electrical cable.

(1) Optical Fiber Cables in Cable Trays and Raceways with Electrical Circuits.

Conductive optical fiber cables contained in an armored or metal-clad-type sheath and nonconductive optical fiber cables shall be permitted to occupy the same cable tray or raceway with conductors for electric light, power, Class 1, non-power-limited fire alarm, Type ITC, or medium-power network-powered broadband communications circuits operating at 1000 volts or less. Conductive optical fiber cables without an armored or metal-clad-type sheath shall not be permitted to occupy the same cable tray or raceway with conductors for electric light, power, Class 1, non-power-limited fire alarm, Type ITC, or medium-power network-powered broadband communications circuits, unless all of the conductors of electric light, power, Class 1, non-power-limited fire alarm, and medium-power network-powered broadband communications circuits are separated from all of the optical fiber cables by a permanent barrier or listed divider.

(2) Optical Fiber Cables in Cabinets, Outlet Boxes, and Similar Enclosures with electrical Circuits.

Nonconductive optical fiber cables shall not be permitted to occupy the same cabinet, outlet box, panel, or similar enclosure housing the electrical terminations of an electric light, power, Class 1, non-power-limited fire alarm, or medium-power network-powered broadband communications circuit unless one or more of the following conditions exist:

(1) The nonconductive optical fiber cables are functionally associated with the electric light, power, Class 1, non-power-limited fire alarm, or medium-power network-powered broadband communications circuit.

(2) The conductors for electric light, power, Class 1, non-power-limited fire alarm, Type ITC, or medium-power network-powered broadband communications circuits operate at 1000 volts or less.

(3) The nonconductive optical fiber cables and the electrical terminations of electric light, power, Class 1, non-power-limited fire alarm, or medium-power network-powered broadband communications circuit are installed in factory- or field-assembled control centers.

(4) The nonconductive optical fiber cables are installed in an industrial establishment where conditions of maintenance and supervision ensure that only qualified persons service the installation.

When optical fibers are within the same hybrid cable for electric light, power, Class 1, non-power-limited fire alarm, or medium-power network-powered broadband communications circuits operating at 1000 volts or less, they shall be permitted to be installed only where the functions of the optical fibers and the electrical conductors are associated.

Optical fibers in hybrid optical fiber cables containing only current-carrying conductors for electric light, power, or Class 1 circuits rated 1000 volts or less shall be permitted to occupy the same cabinet, cable tray, outlet box, panel, raceway, or other termination enclosure with conductors for electric light, power, or Class 1 circuits operating at 1000 volts or less.

Optical fibers in hybrid optical fiber cables containing current-carrying conductors for electric light, power, or Class 1 circuits rated over 1000 volts shall be permitted to occupy the same cabinet, cable tray, outlet box, panel, raceway, or other termination enclosure with conductors for electric light, power, or Class 1 circuits in industrial establishments, where conditions of maintenance and supervision ensure that only qualified persons service the installation.

NOTES FOR THE PANEL STATEMENT:

X00.100 (B) re-alignment TG summary of 725.139 (A)(B), 726.139(A), 760.139 (A)(B).

X00.100 (C) re-alignment TG summary of 725.139 (C), 726.139(B), 760.139 (C).

X00.100 (D) from 725.139 (D).

X00.100 (E) re-alignment TG summary of 725.139 (E), 726.139(C).

X00.100 (F) (5) re-alignment TG summary of 725.139 (F), 760.139 (E) including proposed changes of PI-1196.

X00.136 (A) General. Formerly 725.136(A) and 725.136(I).

X00.136 (A) *Exception:* Formerly 840.133(A)(1)(a).

X00.136 (A) (1) Formerly 725.136(B).

X00.136 (A) (2) Formerly 725.136(C).

X00.136 (A) (3) Formerly 725.136(D), including the different options.

X00.136 (A) (4) Formerly 725.136(E).

X00.136 (A) (5) (a) Formerly 800.133(A)(3) Ex 3.

X00.136 (A) (5) (b) Formerly 760.136(F).

X00.136 (A) (6) Formerly 725.136(I)(1).

X00.136 (A) (7) Formerly 725.136(I)(2)

X00.136 (A) (8) Formerly 725.136(F), including the (a)-(c)

X00.136 (A) (9) Formerly 725.136(G)

X00.136 (A) (10) Formerly 725.136(H)

Important Notice: This document has been provided in Microsoft Word format for the purpose of NEC® Code-Making Panel Task Group work. This document is the property of the National Fire Protection Association (NFPA), and may not be used for any other purpose or distributed to any other persons or parties outside of the NEC® Code-Making Panels.

Article X22 Limited Energy Cables for Power-Limited Circuits, Fault-Managed Power Circuits, Optical Fiber Circuits, and Communications Circuits.
Part I. General
722.1 Scope.

This article covers the general requirements for the installation of single- and multiple-conductor cables used in Class 2 and Class 3 power-limited circuits, power-limited fire alarm (PLFA) circuits, Class 4 fault-managed power circuits, optical fiber cables, and communications systems power-limited, remote-control and signaling circuits that are not an integral part of a device or utilization equipment. The circuits described herein are characterized by usage and electrical power limitations that differentiate them from electric light and power circuits; therefore, alternative requirements are given regarding minimum wire sizes, ampacity adjustment and correction factors, overcurrent protection, insulation requirements, and wiring methods and materials. The installation of fire alarm systems covers wiring and equipment including all circuits controlled and powered by the fire alarm system. The general requirements for communications systems apply to communications circuits, community antenna television and radio distribution systems, network-powered broadband communications systems, and premises-powered broadband communications systems, unless modified by Articles 805, 810, 820, 830, or 840.

Informational Note No. 1: See 300.26 for classifications of remote-control and signaling circuits.

Informational Note No. 2: Class 4 fault-managed power systems consist of a Class 4 power transmitter and a Class 4 power receiver connected by a Class 4 cabling system. These systems are characterized by monitoring the circuit for faults and controlling the source current to ensure the energy delivered into any fault is limited. Class 4 systems differ from Class 1, Class 2, and Class 3 systems in that they are not limited for power delivered to an appropriate load. They are current limited for faults between the Class 4 transmitter and Class 4 receiver.

Informational Note No. 3: Fire alarm systems include fire detection and alarm notification, guard's tour, sprinkler waterflow, and sprinkler supervisory systems. Circuits controlled and powered by the fire alarm system include circuits for the control of building systems safety functions, elevator capture, elevator shutdown, door release, smoke doors and damper control, fire doors and damper control, and fan shutdown, but only where these circuits are powered by and controlled by the fire alarm system.

Informational Note No. 4: See NFPA 72, National Fire Alarm and Signaling Code, for further information on the installation and monitoring for integrity requirements for fire alarm systems.

722.3 Other Articles.

In addition to the requirements of this article, installation of cables shall comply with the articles or sections listed in 722.3(A) through (O). Only those sections of Article 300 referenced in this article shall apply.

(A) Installation of Cables and Conductors in Raceway.

The number and size of conductors and cables, as well as raceway sizing, shall comply with 300.17.

(E) Cable Trays.

Cable tray installations shall comply with Article 392, Parts I and II.

(F) Instrumentation Tray Cable.

Circuits wired using instrumentation tray cable shall comply with 335.1 and 335.10 through 335.120.

(G) Raceways or Sleeves Exposed to Different Temperatures.

Section 300.7(A) shall apply.

(H) Vertical Support for Fire-Resistive Cables and Conductors.

Vertical installations of circuit integrity (CI) cables and conductors installed in a raceway or conductors and cables of electrical circuit protective systems and fire resistive-cable systems shall be installed in accordance with 300.19.

(J) Corrosive, Damp, or Wet Locations.

Important Notice: This document has been provided in Microsoft Word format for the purpose of NEC® Code-Making Panel Task Group work. This document is the property of the National Fire Protection Association (NFPA), and may not be used for any other purpose or distributed to any other persons or parties outside of the NEC® Code-Making Panels.

The installation of power-limited cables installed in corrosive, damp, or wet locations shall comply with 110.11, 300.5(B), 300.6, 300.9, and 310.10(F).

(K) Cable Routing Assemblies.

Cables installed in cable routing assemblies shall be selected in accordance with Table 800.154(c), listed in accordance with 800.182, and installed in accordance with 800.110(C)(1), 800.110(C)(2), and 800.113.

(L) Communications Raceways.

Cables in communications raceways shall be selected in accordance with Table 800.154(b), listed in accordance with 800.182, and installed in accordance with 800.113 and 362.24 through 362.56, where the requirements applicable to electrical nonmetallic tubing (ENT) apply.

(M) Temperature Limitation of Cables.

The requirements of 310.14(A)(3) on the temperature limitation of conductors shall apply to power-limited circuit cables and fault-managed power cables.

(N) Identification of Equipment Grounding Conductors.

Equipment grounding conductors shall be identified in accordance with 250.119.

Exception No.1: Cables that do not contain an equipment grounding conductor shall be permitted to use a conductor with green insulation, or green insulation with one or more yellow stripes, for other than equipment grounding purposes.
Exception No. 2: Conductors with green insulation shall be permitted to be used as ungrounded signal conductors for Types FPLP, FPLR, FPL, and substitute cables installed in accordance with 760.154(A).

(O) Specific Requirements.

As appropriate, the installation of wires and cables shall also comply with the following:

(1) Class 2 and Class 3 cables — Article 725, Part II

(2) Class 4 cables — Article 726, Part IV

(3) Fire alarm cables — Article 760, Part III

(4) Optical fiber cables — Article 770, Part V

722.12 Uses Not Permitted.

Class 4 cables shall not be permitted for any applications that are not part of a Class 4 system.

Exception: Use of Class 4 cable for other applications shall be permitted if the cable has been listed as suitable for the other applications.

X22.x [770.27] Temperature Limitation of Optical Fiber Cables.

Optical fiber cable shall not be used in such a manner that its operating temperature exceeds that of its rating.

722.31 Safety-Control Equipment.

Where damage to power-limited circuits can result in a failure of safety-control equipment that would introduce a direct fire or life hazard, all conductors of such circuits shall be installed in rigid metal conduit, intermediate metal conduit, rigid nonmetallic conduit, electrical metallic tubing, Type MI cable, or Type MC cable, or be otherwise suitably protected from physical damage. Room thermostats, water temperature regulating devices, and similar controls used in conjunction with electrically controlled household heating and air conditioning shall not be considered safety-control equipment.

722.135 Installation of Cables.
The installation of cables shall comply with 722.135(A) through (I), as applicable.
(A) Cables in Buildings.
The installation of cables shall comply with Table 722.135(B).
Table 722.135(B) Installation of Listed Cables in Buildings

Important Notice: This document has been provided in Microsoft Word format for the purpose of NEC® Code-Making Panel Task Group work. This document is the property of the National Fire Protection Association (NFPA), and may not be used for any other purpose or distributed to any other persons or parties outside of the NEC® Code-Making Panels.

Applications		Cable Type[1]					
		Plenum	Riser	General-Purpose	Limited-Use	Under Carpet	PLTC
In ducts specifically fabricated for environmental air as described in 300.22(B)[2]	Cables in lengths as short as practicable to perform the required function	Y	N	N	N	N	N
	In metal raceway that complies with 300.22(B)	Y	Y	Y	Y	N	Y
In other spaces used for environmental air (plenums) as described in 300.22(C)	Cables in other spaces used for environmental air	Y	N	N	N	N	N
	Cables in metal raceway that complies with 300.22(C)	Y	Y	Y	Y	N	Y
	Cables in plenum communications raceways	Y	N	N	N	N	N
	Cables in plenum cable routing assemblies	Y	N	N	N	N	N
	Cables supported by open metal cable trays	Y	N	N	N	N	N
	Cables or cables installed in raceways or cable routing assemblies supported by solid bottom metal cable trays with solid metal covers	Y	Y	Y	Y	N	Y
In risers and vertical runs	Cables in vertical runs penetrating one or more floors and in vertical runs in a shaft	Y	Y	N	N	N	N
	Cables in metal raceways	Y	Y	Y	Y	N	Y
	Cables in fireproof shafts	Y	Y	Y	N	N	Y
	Cables in plenum communications raceways	Y	Y	N	N	N	N
	Cables in plenum cable routing assemblies	Y	Y	N	N	N	N
	Cables in riser communications raceways	Y	Y	N	N	N	N
	Cables in riser cable routing assemblies	Y	Y	N	N	N	N
	Cables in one- and two-family dwellings	Y	Y	Y	Y[3]	N	Y
Cables and innerducts installed in metal raceways in a riser having firestops at each floor[2]	Cables	Y	Y	Y	Y	N	Y
	Cables in plenum communications raceways (innerduct)	Y	Y	Y	Y	N	Y
	Cables in riser communications raceways (innerduct)	Y	Y	Y	Y	N	Y
	Cables in general-purpose communications raceways (innerduct)	Y	Y	Y	Y	N	Y
In fireproof riser shafts having firestops at each floor[2]	Cables	Y	Y	Y	N	N	Y
	Cables in plenum communications raceways or plenum cable routing assemblies	Y	Y	Y	N	N	Y

Important Notice: This document has been provided in Microsoft Word format for the purpose of NEC® Code-Making Panel Task Group work. This document is the property of the National Fire Protection Association (NFPA), and may not be used for any other purpose or distributed to any other persons or parties outside of the NEC® Code-Making Panels.

Applications		Cable Type[1]					
		Plenum	Riser	General-Purpose	Limited-Use	Under Carpet	PLTC
	Cables in riser communications raceways or riser cable routing assemblies	Y	Y	Y	N	N	Y
	Cables in general-purpose communications raceways or general-purpose cable routing assemblies	Y	Y	Y	N	N	Y
In cable trays	Outdoors	N	N	N	N	N	Y
	Cables, or cables in plenum, riser, or general-purpose communications raceways, installed indoors	Y	Y	Y	N	N	Y
In cross-connect arrays	Cables, and cables in plenum, riser, or general-purpose communications raceways or cable routing assemblies	Y	Y	Y	N	N	Y
In one-, two-, and multifamily dwellings, and in building locations other than the locations covered above	Cables	Y	Y	Y	Y[3]	N	Y
	Cables in plenum, riser, or general-purpose communications raceways or cable routing assemblies, or raceways recognized in Chapter 3	Y	Y	Y	Y	N	Y
	Cables in nonconcealed spaces	Y	Y	Y	Y[4]	Y	Y
	Under carpet, floor covering, modular flooring, and planks	N	N	N	N	Y	N

[1]"N" indicates that the cable type shall not be installed in the application. "Y" indicates that the cable type shall be permitted to be installed in the application, subject to any limitations described in this article or the articles described in 722.3(O).
[2]In 300.22(B), cables shall be permitted in ducts specifically fabricated for environmental air only if directly associated with the air distribution system.
[3]Limited-use cable shall be permitted to be installed only in one-, two-, and multifamily dwellings and only if the cable is smaller in diameter than 6.35 mm (0.25 in.).
[4]The exposed length of cable shall not exceed 3.05 m (10 ft).
Informational Note No. 1: See NFPA 90A-2024, *Standard for the Installation of Air-Conditioning and Ventilating Systems* for information on fire protection of wiring installed in ducts specifically fabricated for environmental air and other spaces used for environmental air (plenums).
Informational Note No. 2: See 300.21 for firestop requirements for floor penetrations.
Informational Note No. 3: See Chapter 3 for the installation requirements for PLTC cables installed outdoors in cable trays.
Informational Note No. 4: See UL 2024, *Cable Routing Assemblies and Communications Raceways*, for applicable requirements for plenum, riser, and general-purpose cable routing assemblies and raceways.

(B) Industrial Establishments.
In industrial establishments where the conditions of maintenance and supervision ensure that only qualified persons service the installation, Type PLTC cable shall be permitted in accordance with either of the following:

(1) Where the cable is not subject to physical damage, Type PLTC cable that complies with the crush and impact requirements of Type MC cable and is identified as Type PLTC-ER for such use shall be permitted to be exposed between the cable tray and the utilization equipment or device. The cable shall be continuously supported and protected against physical damage using mechanical protection such as dedicated struts, angles, or channels. The cable shall be supported and secured at intervals not exceeding 1.8 m (6 ft). Where not subject to physical damage, Type PLTC-ER cable shall be permitted to transition between cable trays and between cable trays and utilization equipment or devices for a distance not to exceed 1.8 m (6 ft) without continuous support. The cable shall be mechanically supported where exiting the cable tray to ensure that the minimum bending radius is not exceeded.

(2) Type PLTC cable, with a metallic sheath or armor in accordance with 722.179(A)(6), shall be permitted to be installed exposed. The cable shall be continuously supported and protected against physical damage

Important Notice: This document has been provided in Microsoft Word format for the purpose of NEC® Code-Making Panel Task Group work. This document is the property of the National Fire Protection Association (NFPA), and may not be used for any other purpose or distributed to any other persons or parties outside of the NEC® Code-Making Panels.

using mechanical protection such as dedicated struts, angles, or channels. The cable shall be secured at intervals not exceeding 1.8 m (6 ft).

(C) In Hoistways.
In hoistways, cables shall be installed in rigid metal conduit, rigid nonmetallic conduit, intermediate metal conduit, liquidtight flexible nonmetallic conduit, or electrical metallic tubing. For elevators or similar equipment, these conductors shall be permitted to be installed as provided in 620.21.

(D) Cable Substitutions.
The substitutions for cables listed in Table 722.135(E) and illustrated in Figure 722.135(E) shall be permitted. Where substitute cables are installed, the installation requirements of the articles described in 722.3(O) shall also apply. CI cables shall be permitted to be installed to provide 2-hour circuit integrity. See 722.135(F).
Informational Note: See 800.179 for information on Types CMP, CMR, CM, and CMX.

Table 722.135(E) Cable Substitutions

Cable Type	Permitted Substitutions
CL3P	CMP
CL2P	CMP, CL3P
CL3R	CMP, CL3P, CMR
CL2R	CMP, CL3P, CL2P, CMR, CL3R
PLTC	None
CL3	CMP, CL3P, CMR, CL3R, CMG, CM, PLTC
CL2	CMP, CL3P, CL2P, CMR, CL3R, CL2R, CMG, CM, PLTC, CL3
CL3X	CMP, CL3P, CMR, CL3R, CMG, CM, PLTC, CL3, CMX
CL2X	CMP, CL3P, CL2P, CMR, CL3R, CL2R, CMG, CM, PLTC, CL3, CL2, CMX, CL3X
FPLP	CMP
FPLR	CMP, FPLP, CMR
FPL	CMP, FPLP, CMR, FPLR, CMG, CM
OFNP	None
OFCP	OFNP
OFNR	OFNP
OFCR	OFNP, OFCP, OFNR
OFNG, OFN	OFNP, OFNR
OFCG, OFC	OFNP, OFCP, OFNR, OFCR, OFNG, OFN
CMUC	None

Figure 722.135 (E) Cable Substitution Hierarchy

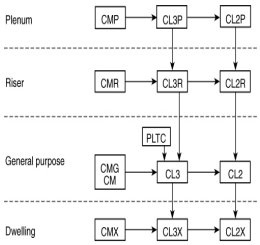

Type CM—Communications wires and cables
Type CL2 and CL3—Class 2 and Class 3 remote-control, signaling, and power-limited cables
Type PLTC—Power-limited tray cable
A → B Cable A shall be permitted to be used in place of cable B.

Important Notice: This document has been provided in Microsoft Word format for the purpose of NEC® Code-Making Panel Task Group work. This document is the property of the National Fire Protection Association (NFPA), and may not be used for any other purpose or distributed to any other persons or parties outside of the NEC® Code-Making Panels.

Part IV. Installation Methods Within Buildings

X22.x [805.154] Substitutions for Listed Communications Cables.

The substitutions for communications cables listed in Table 805.154 and illustrated in Figure 805.154 shall be permitted.

Commented [CJ1]: Double check that this is already in X22, and I won't have to move.

Table 805.154 Cable Substitutions

Cable Type	Permitted Substitutions
CMR	CMP
CMG, CM	CMP, CMR
CMX	CMP, CMR, CMG, CM

Figure 805.154 Cable Substitution Hierarchy.

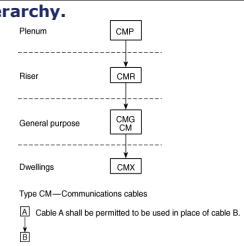

Part V. Installation Methods Within Buildings

X22.x [820.154] Substitutions of Listed CATV Cables.

The substitutions for coaxial cables in Table 820.154 and illustrated in Figure 820.154 shall be permitted.

Informational Note: The substitute cables in Table 820.154 and Figure 820.154 are only coaxial-type cables.

Table 820.154 Coaxial Cable Uses and Permitted Substitutions

Cable Type	Permitted Substitutions
CATVP	CMP, BLP
CATVR	CATVP, CMP, CMR, BMR, BLP, BLR
CATV	CATVP, CMP, CATVR, CMR, CMG, CM, BMR, BM, BLP, BLR, BL
CATVX	CATVP, CMP, CATVR, CMR, CATV, CMG, CM, BMR, BM, BLP, BLR, BL, BLX

Figure 820.154 Coaxial Cable Substitution Hierarchy.

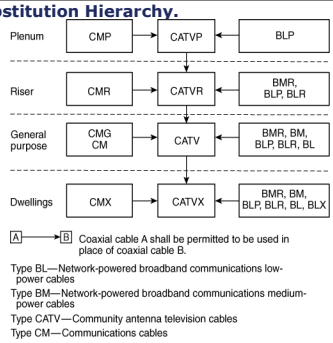

X22.x [830.154] Substitutions of Network-Powered Broadband Communications System Cables.

The substitutions for network-powered broadband system cables listed in Table 830.154 shall be permitted.

Table 830.154 Cable Substitutions

Cable Type	Permitted Cable Substitutions
BM	BMR
BLP	CMP, CL3P

Important Notice: This document has been provided in Microsoft Word format for the purpose of NEC® Code-Making Panel Task Group work. This document is the property of the National Fire Protection Association (NFPA), and may not be used for any other purpose or distributed to any other persons or parties outside of the NEC® Code-Making Panels.

Cable Type	Permitted Cable Substitutions
BLR	CMP, CL3P, CMR, CL3R, BLP, BMR
BL	CMP, CMR, CM, CMG, CL3P, CL3R, CL3, BMR, BM, BLP, BLR
BLX	CMP, CMR, CM, CMG, CMX, CL3P, CL3R, CL3, CL3X, BMR, BM, BLP, BRP, BL

X22.x [760.154](A) Fire Alarm Cable Substitutions.
The substitutions for fire alarm cables listed in Table 760.154(A) and illustrated in Figure 760.154(A) shall be permitted. Where substitute cables are installed, the wiring requirements of Article 760, Parts I and III, shall apply.
Informational Note: See 800.179 for information on communications cables (CMP, CMR, CMG, CM).
Figure 760.154(A) Cable Substitution Hierarchy.

Table 760.154(A) Cable Substitutions

Cable Type	Permitted Substitutions
FPLP	CMP
FPLR	CMP, FPLP, CMR
FPL	CMP, FPLP, CMR, FPLR, CMG, CM

Table 770.154(b) Cable Substitutions

Cable Type	Permitted Substitutions
OFNP	None
OFCP	OFNP
OFNR	OFNP
OFCR	OFNP, OFCP, OFNR
OFNG, OFN	OFNP, OFNR
OFCG, OFC	OFNP, OFCP, OFNR, OFCR, OFNG, OFN

Figure 770.154 Cable Substitution Hierarchy.

(E) Circuit Integrity (CI) Cable, Fire-Resistive Cable System, or Electrical Circuit Protective System.
CI cable, a fire-resistive cable system, or a listed electrical circuit protective system shall be permitted for use in systems that supply critical circuits to ensure survivability for continued circuit operation for a specified time under fire conditions.
(F) Thermocouple Circuits.
Conductors in Type PLTC cables used for Class 2 thermocouple circuits shall be permitted to be any of the materials used for thermocouple extension wire.
(G) Bundling of 4-Pair Cables Transmitting Power and Data.
Where 4-pair cables are used to transmit power and data to a powered device, 725.144 shall apply.
(H) Installation of Circuit Conductors Extending Beyond One Building.
Circuit conductors that extend beyond one building and are run such that they are subject to accidental contact with electric light or power conductors operating over 300 volts to ground, or are exposed to lightning on interbuilding circuits on the same premises, shall comply with the following:

(1) For other than coaxial conductors, 800.44, 800.53, 800.100, 805.50, 805.93, 805.170(A), and 805.170(B)

(2) For coaxial conductors, 800.44, 820.93, and 820.100

(3) The installation requirements of Article 300, Part I

(I) Installation in Dwelling Units

Where Class 4 cables are used in a dwelling unit, X90.50 shall apply.

Important Notice: This document has been provided in Microsoft Word format for the purpose of NEC® Code-Making Panel Task Group work. This document is the property of the National Fire Protection Association (NFPA), and may not be used for any other purpose or distributed to any other persons or parties outside of the NEC® Code-Making Panels.

WIRING METHODS

X22.x [725.130] Wiring Methods and Materials on Load Side of the Class 2 or Class 3 Power Source.
Class 2 and Class 3 circuits on the load side of the power source shall be permitted to be installed using wiring methods and materials in accordance with 725.130(A), (B), or a combination of both. Article 722, Parts I and II shall apply.

(A) Class 1 Wiring Methods and Materials.
Use of Class 1 wiring methods for Class 2 and Class 3 circuits shall be permitted. Separation from electric light, power, Class 1, non-power-limited fire alarm circuit conductors, and medium-power network-powered broadband communications cables shall comply with 725.136.
Exception: The ampacity adjustment factors given in 310.15(C)(1) shall not apply.

(B) Class 2 and Class 3 Wiring Methods and Materials.
Conductors on the load side of the power source shall be insulated in accordance with 722.179 and be installed in accordance with 722.135 and 725.136 through 725.144.
Exception No. 1: As provided for in 620.21 for elevators and similar equipment.
Exception No. 2: Other wiring methods and materials installed in accordance with 725.3 shall be permitted to extend or replace the conductors and cables described in 722.179(A) and permitted by 725.130(B).
Exception No. 3: Bare Class 2 conductors shall be permitted as part of a listed intrusion protection system where installed in accordance with the listing instructions for the system.

X22.x [725.144] Bundling of Cables Transmitting Power and Data.
Sections 725.144(A) and (B) shall apply to Class 2 and Class 3 circuits that transmit power and data to a powered device over listed cabling. Section 300.11 and Article 725, Parts I and III shall apply to Class 2 and Class 3 circuits that transmit power and data. The conductors that carry power for the data circuits shall be copper. The current in the power circuit shall not exceed the current limitation of the connectors.
Informational Note No. 1: One example of the use of cables that transmit power and data is the connection of closed-circuit TV cameras (CCTV).
Informational Note No. 2: The 8P8C connector is in widespread use with powered communications systems. IEC 60603-7-2008, *Connectors for electronic equipment — Part 7-1: Detail specification for 8-way, unshielded, free and fixed connectors,* specifies these connectors to have a current-carrying capacity per contact of 1.0 amperes maximum at 60°C (149°F). See IEC 60603-7 for more information on current-carrying capacity at higher and lower temperatures.
Informational Note No. 3: The requirements of Table 725.144 were derived for carrying power and data over 4-pair copper balanced twisted pair cabling. This type of cabling is described in ANSI/TIA 568-C.2-2009, *Commercial Building Telecommunications Cabling Standard — Part 2: Balanced Twisted-Pair Telecommunications Cabling and Components.*
Informational Note No. 4: See TIA-TSB-184-A-2017, *Guidelines for Supporting Power Delivery Over Balanced Twisted-Pair Cabling*, for information on installation and management of balanced twisted pair cabling supporting power delivery.
Informational Note No. 5: See ANSI/NEMA C137.3-2017, *American National Standard for Lighting Systems — Minimum Requirements for Installation of Energy Efficient Power over Ethernet (PoE) Lighting Systems*, for information on installation of cables for PoE lighting systems.
Informational Note No. 6: Rated current for power sources covered in 725.144 is the output current per conductor the power source is designed to deliver to an operational load at normal operating conditions, as declared by the manufacturer. In the design of these systems, the actual current in a given conductor might vary from the rated current per conductor by as much as 20 percent. An increase in current in one conductor is offset by a corresponding decrease in current in one or more conductors of the same cable.

(A) Use of 4-Pair Class 2 or Class 3 Cables to Transmit Power and Data.
Where Type CL3P, Type CL2P, Type CL3R, Type CL2R, Type CL3, or Type CL2 4-pair cables transmit power and data, the rated current per conductor of the power source shall not exceed the ampacities in Table 725.144 at an ambient temperature of 30°C (86°F). For ambient temperatures above 30°C (86°F), the correction factors in Table 310.15(B)(1)(1) or in Equation 310.15(B) shall apply.
Exception: Compliance with Table 725.144 shall not be required for installations where conductors are 24 AWG or larger and the rated current per conductor of the power source does not exceed 0.3 amperes.
Informational Note: One example of the use of Class 2 cables is a network of closed-circuit TV cameras using 24 AWG, 60°C rated, Type CL2R, Category 5e balanced twisted-pair cabling.

(B) Use of Class 2-LP or Class 3-LP Cables to Transmit Power and Data.
Type CL3P-LP, Type CL2P-LP, Type CL3R-LP, Type CL2R-LP, Type CL3-LP, or Type CL2-LP cables shall be permitted to supply power to equipment from a power source with a rated current per conductor up to the marked current limit located immediately following the suffix "-LP" and shall be permitted to transmit data to the equipment. Where the number of bundled LP cables is 192 or less and the selected ampacity of the cables in accordance with Table 725.144 exceeds the marked current limit of the cable, the ampacity determined from the table shall be permitted to be used. For ambient temperatures above 30°C (86°F), the correction factors of Table 310.15(B)(1)(1) or Equation 310.15(B) shall apply. The Class 2-LP and Class 3-LP cables shall comply with the following, as applicable:

(1) Cables with the suffix "-LP" shall be permitted to be installed in bundles, raceways, cable trays, communications raceways, and cable routing assemblies.

Important Notice: This document has been provided in Microsoft Word format for the purpose of NEC® Code-Making Panel Task Group work. This document is the property of the National Fire Protection Association (NFPA), and may not be used for any other purpose or distributed to any other persons or parties outside of the NEC® Code-Making Panels.

(2) Cables with the suffix "-LP" and a marked current limit shall follow the substitution hierarchy of 722.135(E) for the cable type without the suffix "-LP" and without the marked current limit.

(3) System design shall be permitted by qualified persons under engineering supervision.

Informational Note: An example of the marking on a 23 AWG, 4-pair, Class 2 cable rated 75°C with an LP current rating of 0.6 amperes per conductor is "CL2-LP(0.6A) 75°C 23 AWG 4-pair". See 722.179(A)(9).

Table 725.144 Ampacities of Each Conductor in Amperes in 4-Pair Class 2 or Class 3 Balanced Twisted-Pair Cables Based on Copper Conductors at an Ambient Temperature of 30°C (86°F) with All Conductors in All Cables Carrying Current, 60°C (140°F), 75°C (167°F), and 90°C (194°F) Rated Cables

	Number of 4-Pair Cables in a Bundle																	
	1–7			8–19			20–37			38–61			62–91			92–192		
	Temperature Rating			Temperature Rating			Temperature Rating			Temperature Rating			Temperature Rating			Temperature Rating		
AWG	60°C	75°C	90°C	60°C	75°C	90°C	60°C	75°C	90°C	60°C	75°C	90°C	60°C	75°C	90°C	60°C	75°C	90°C
26	1.00	1.23	1.42	0.71	0.87	1.02	0.55	0.68	0.78	0.46	0.57	0.67	0.45	0.55	0.64	NA	NA	NA
24	1.19	1.46	1.69	0.81	1.01	1.17	0.63	0.78	0.91	0.55	0.67	0.78	0.46	0.56	0.65	0.40	0.48	0.55
23	1.24	1.53	1.78	0.89	1.11	1.28	0.77	0.95	1.10	0.66	0.80	0.93	0.58	0.71	0.82	0.45	0.55	0.63
22	1.50	1.86	2.16	1.04	1.28	1.49	0.77	0.95	1.11	0.66	0.82	0.96	0.62	0.77	0.89	0.53	0.63	0.72

Notes:
1. For bundle sizes over 192 cables, or for conductor sizes smaller than 26 AWG, ampacities shall be permitted to be determined by qualified personnel under engineering supervision.
2. Where only half of the conductors in each cable are carrying current, the values in the table shall be permitted to be increased by a factor of 1.4.
Informational Note No. 1: Elevated cable temperatures can reduce a cable's data transmission performance. For information on practices for 4-pair balanced twisted pair cabling, see TIA-TSB-184-A and 6.4.7, 6.6.3, and Annex G of ANSI/TIA-568-C.2, which provide guidance on adjustments for operating temperatures between 20°C and 60°C.
Informational Note No. 2: The per-contact current rating of connectors can limit the maximum allowable current below the ampacity shown in Table 725.144.

X22.x [726.144] Ampacity.
The ampacity of Class 4 cables shall comply with 310.15 based on the temperature rating of the Class 4 cable for conductors sized 16 AWG to 6 AWG. For conductors sized 24 AWG to 17 AWG, the Class 4 cable shall be have an ampacity in accordance with the marking FMP-XXA, where XX is the maximum ampacity permitted. No more than 20 current carrying conductors shall be installed without maintaining spacing.
Informational Note No. 1: See 722.179(A)(16) for additional Class 4 cable requirements.
Informational Note No. 2: See UL 1400-1-2022, *Outline of Investigation for Fault-Managed Power Systems — Part 1: General Requirements*, and UL 1400-2-2023, *Outline of Investigation for Fault-Managed Power Systems — Part 2: Requirements for Class 4 Cables*, for information on determining maximum ampacities.

X22.x [760.130] Wiring Methods and Materials on Load Side of the PLFA Power Source.
Fire alarm circuits on the load side of the power source shall be permitted to be installed using wiring methods and materials in accordance with 760.130(A), (B), or a combination of both. Article 722, Parts I and II shall apply.
(A) NPLFA Wiring Methods and Materials.
NPLFA wiring methods shall be permitted when used in accordance with 760.46, 760.49, or 760.53 for PLFA circuits. Conductors shall be solid or stranded copper. Separation from electric light, power, Class 1, non-power-limited fire alarm circuit conductors, and medium-power network-powered broadband communications cables shall comply with 760.136.
Exception: The ampacity adjustment factors specified in 310.15(C)(1) shall not apply.
(B) PLFA Wiring Methods and Materials.
Power-limited fire alarm conductors and cables described in 722.179 shall be installed as detailed in 722.135 and 760.130(B)(1) through (B)(4). Devices shall be installed in accordance with 110.3(B), 300.11(A), and 300.15.
(1) In Raceways, Exposed on Ceilings or Sidewalls, or Fished in Concealed Spaces.
Cable splices or terminations shall be made in listed fittings, boxes, enclosures, fire alarm devices, or utilization equipment. Where installed exposed, cables shall be adequately supported and installed such that maximum protection against physical damage is afforded by building construction such as baseboards, door frames, ledges, and so forth. Where located within 2.1 m (7 ft) of the floor, cables shall be securely fastened in an approved manner at intervals of not more than 450 mm (18 in.).
(2) Passing Through a Floor or Wall.
Cables shall be installed in metal raceways or rigid nonmetallic conduit where passing through a floor or wall to a height of 2.1 m (7 ft) above the floor, unless adequate protection can be afforded by building construction such as detailed in 760.130(B)(1) or unless an equivalent solid guard is provided.
(3) Nonconcealed Spaces.

Important Notice: This document has been provided in Microsoft Word format for the purpose of NEC® Code-Making Panel Task Group work. This document is the property of the National Fire Protection Association (NFPA), and may not be used for any other purpose or distributed to any other persons or parties outside of the NEC® Code-Making Panels.

Cables covered by Chapter 3 used for wiring of PLFA circuits, and installed in non-concealed spaces shall comply with the following:

(a) Shall be installed in accordance with the requirements of 722.179(A)(15)(a) and (A)(15)(b)
(b) Exposed portions of cable shall have a length not exceeding 3 m (10 ft.).

(4) Portable Fire Alarm Systems.
A portable fire alarm system provided to protect a stage or set when not in use shall be permitted to use wiring methods in accordance with 530.12.

X22.x [760.142] Conductor Size.
Conductors of 26 AWG shall be permitted only where spliced with a connector listed as suitable for 26 AWG to 24 AWG or larger conductors that are terminated on equipment or where the 26 AWG conductors are terminated on equipment listed as suitable for 26 AWG conductors. Single conductors shall not be smaller than 18 AWG.

X22.x [760.143] Support of Conductors.
Power-limited fire alarm circuit conductors shall not be strapped, taped, or attached by any means to the exterior of any conduit or other raceway as a means of support.

Part V. Installation Methods Within Buildings

X22.x [770.110] Raceways, Cable Routing Assemblies, and Cable Trays for Optical Fiber Cables.

(A) Types of Raceways.
Optical fiber cables shall be permitted to be installed in any raceway that complies with either 770.110(A)(1) or (A)(2).

(1) Raceways Recognized in Chapter 3.
Optical fiber cables shall be permitted to be installed in any raceway included in Chapter 3. The raceways shall be installed in accordance with Chapter 3.

(2) Communications Raceways.
Optical fiber cables shall be permitted to be installed in listed communications raceways selected in accordance with Table 800.154(b).

(B) Raceway Fill for Optical Fiber Cables.
Raceway fill for optical fiber cables shall comply with either 770.110(B)(1) or (B)(2).

(1) Without Electric Light or Power Conductors.
Where optical fiber cables are installed in raceway without electric light or power conductors, the raceway fill requirements of Chapters 3 and 9 shall not apply.

(2) Nonconductive Optical Fiber Cables with Electric Light or Power Conductors.
Where nonconductive optical fiber cables are installed with electric light or power conductors in a raceway, the raceway fill requirements of Chapters 3 and 9 shall apply.

(C) Cable Routing Assemblies.
Optical fiber cables shall be permitted to be installed in listed cable routing assemblies selected in accordance with Table 800.154(c).

(D) Cable Trays.
Optical fiber cables shall be permitted to be installed in metal or listed nonmetallic cable tray systems.

X22.x [770.111] Innerduct for Optical Fiber Cables.
Listed plenum communications raceways, listed riser communications raceways, and listed general-purpose communications raceways selected in accordance with Table 800.154(b) shall be permitted to be installed as innerduct in any type of listed raceway permitted in Chapter 3.

X22.x [770.113] Installation of Optical Fiber Cables.
Installation of optical fiber cables shall comply with 770.113(A) through (J). Installation of raceways and cable routing assemblies shall comply with 770.110.

(A) Listing.
Optical fiber cables installed in buildings shall be listed in accordance with 770.179 and installed in accordance with the limitations of the listing.
Exception: Optical fiber cables that are installed in compliance with 770.48 shall not be required to be listed.

(B) Ducts Specifically Fabricated for Environmental Air.
Installations of optical fiber cables in ducts specifically fabricated for environmental air shall be in accordance with 770.113(B)(1) and (B)(2).

(1) Uses Permitted.
The following cables shall be permitted in ducts specifically fabricated for environmental air as described in 300.22(B) if they are directly associated with the air distribution system:

(1) Up to 1.22 m (4 ft) of Types OFNP and OFCP

(2) Types OFNP, OFCP, OFNR, OFCR, OFNG, OFCG, OFN, and OFC installed in raceways that are installed in compliance with 300.22(B)

Informational Note: For information on fire protection of wiring installed in fabricated ducts, see NFPA 90A-2018, *Standard for the Installation of Air-Conditioning and Ventilating Systems*.

(2) Uses Not Permitted.

Important Notice: This document has been provided in Microsoft Word format for the purpose of NEC® Code-Making Panel Task Group work. This document is the property of the National Fire Protection Association (NFPA), and may not be used for any other purpose or distributed to any other persons or parties outside of the NEC® Code-Making Panels.

Types OFNR, OFCR, OFNG, OFCG, OFN, and OFC shall not be permitted to be installed in ducts specifically fabricated for environmental air as described in 300.22(B).
Informational Note: See NFPA 90A-2021, *Standard for the Installation of Air-Conditioning and Ventilating Systems*, for information on fire protection of wiring installed in fabricated ducts.

(C) Other Spaces Used for Environmental Air (Plenums).
Installations of optical fiber cables in other spaces used for environmental air shall be in accordance with 770.113(C)(1) and (C)(2).

(1) Uses Permitted.
The following cables shall be permitted in other spaces used for environmental air as described in 300.22(C):

(1) Types OFNP and OFCP

(2) Types OFNP and OFCP installed in plenum communications raceways

(3) Types OFNP and OFCP installed in plenum cable routing assemblies

(4) Types OFNP and OFCP supported by open metal cable tray systems

(5) Types OFNP, OFCP, OFNR, OFCR, OFNG, OFCG, OFN, and OFC installed in raceways that are installed in compliance with 300.22(C)

(6) Types OFNP, OFCP, OFNR, OFCR, OFNG, OFCG, OFN, and OFC supported by solid bottom metal cable trays with solid metal covers in other spaces used for environmental air (plenums), as described in 300.22(C)

(7) Types OFNP, OFCP, OFNR, OFCR, OFNG, OFCG, OFN, and OFC installed in plenum riser and general-purpose communications raceways supported by solid bottom metal cable trays with solid metal covers in other spaces used for environmental air (plenums), as described in 300.22(C)

(2) Uses Not Permitted.
Types OFNR, OFCR, OFNG, OFCG, OFN, and OFC shall not be permitted to be installed in other spaces used for environmental air (plenums).
Informational Note: See NFPA 90A-2018, *Standard for the Installation of Air-Conditioning and Ventilating Systems*, for information on fire protection of wiring installed in other spaces used for environmental air.

(D) Risers — Cables in Vertical Runs.
Installations of optical fiber cables in vertical runs shall be in accordance with 770.113(D)(1) and (D)(2).

(1) Uses Permitted.
The following cables shall be permitted in vertical runs penetrating one or more floors and in vertical runs in a shaft:

(1) Types OFNP, OFCP, OFNR, and OFCR

(2) Types OFNP, OFCP, OFNR, and OFCR installed in the following:

a. Plenum communications raceways

b. Plenum cable routing assemblies

c. Riser communications raceways

d. Riser cable routing assemblies

(2) Uses Not Permitted.
Types OFNG, OFCG, OFN, and OFC shall not be permitted to be installed in vertical runs.
Informational Note: See 770.26 for firestop requirements for floor penetrations.

(E) Risers — Cables Permitted in Metal Raceways.
The following cables and innerducts shall be permitted in metal raceways in a riser having firestops at each floor:

(1) Types OFNP, OFCP, OFNR, OFCR, OFNG, OFCG, OFN, and OFC

(2) Types OFNP, OFCP, OFNR, OFCR, OFNG, OFCG, OFN, and OFC installed in the following:

a. Plenum communications raceways (innerduct)

b. Riser communications raceways (innerduct)

c. General-purpose communications raceways (innerduct)

Informational Note: See 770.26 for firestop requirements for floor penetrations.

(F) Risers — Cables Permitted in Fireproof Shafts.
The following cables shall be permitted to be installed in fireproof riser shafts having firestops at each floor:

Important Notice: This document has been provided in Microsoft Word format for the purpose of NEC® Code-Making Panel Task Group work. This document is the property of the National Fire Protection Association (NFPA), and may not be used for any other purpose or distributed to any other persons or parties outside of the NEC® Code-Making Panels.

(1) Types OFNP, OFCP, OFNR, OFCR, OFNG, OFCG, OFN, and OFC

(2) Types OFNP, OFCP, OFNR, OFCR, OFNG, OFCG, OFN, and OFC installed in the following:

a. Plenum communications raceways

b. Plenum cable routing assemblies

c. Riser communications raceways

d. Riser cable routing assemblies

e. General-purpose communications raceways

f. General-purpose cable routing assemblies

Informational Note: See 770.26 for firestop requirements for floor penetrations.

(G) Risers — Cables Permitted in One- and Two-Family Dwellings.
The following cables shall be permitted in one- and two-family dwellings:

(1) Types OFNP, OFCP, OFNR, OFCR, OFNG, OFCG, OFN, and OFC

(2) Types OFNP, OFCP, OFNR, OFCR, OFNG, OFCG, OFN, and OFC installed in the following:

a. Plenum communications raceways

b. Plenum cable routing assemblies

c. Riser communications raceways

d. Riser cable routing assemblies

e. General-purpose communications raceways

f. General-purpose cable routing assemblies

(H) Cable Trays — Cables Permitted.
The following cables shall be permitted to be supported by cable trays:

(1) Types OFNP, OFCP, OFNR, OFCR, OFNG, OFCG, OFN, and OFC

(2) Types OFNP, OFCP, OFNR, OFCR, OFNG, OFCG, OFN, and OFC installed in the following:

a. Plenum communications raceways

b. Riser communications raceways

c. General-purpose communications raceways

(I) Distributing Frames and Cross-Connect Arrays — Cables Permitted.
The following cables shall be permitted to be installed in distributing frames and cross-connect arrays:

(1) Types OFNP, OFCP, OFNR, OFCR, OFNG, OFCG, OFN, and OFC

(2) Types OFNP, OFCP, OFNR, OFCR, OFNG, OFCG, OFN, and OFC installed in the following:

a. Plenum communications raceways

b. Plenum cable routing assemblies

c. Riser communications raceways

d. Riser cable routing assemblies

e. General-purpose communications raceways

f. General-purpose cable routing assemblies

(J) Other Building Locations — Cables Permitted.
The following cables shall be permitted to be installed in building locations other than the locations covered in 770.113(B) through (I):

Important Notice: This document has been provided in Microsoft Word format for the purpose of NEC® Code-Making Panel Task Group work. This document is the property of the National Fire Protection Association (NFPA), and may not be used for any other purpose or distributed to any other persons or parties outside of the NEC® Code-Making Panels.

(1) Types OFNP, OFCP, OFNR, OFCR, OFNG, OFCG, OFN, and OFC

(2) Types OFNP, OFCP, OFNR, OFCR, OFNG, OFCG, OFN, and OFC installed in:

a. Plenum communications raceways

b. Plenum cable routing assemblies

c. Riser communications raceways

d. Riser cable routing assemblies

e. General-purpose communications raceways

f. General-purpose cable routing assemblies

(3) Types OFNP, OFCP, OFNR, OFCR, OFNG, OFCG, OFN, and OFC installed in a raceway of a type recognized in Chapter 3

X22.x [770.133] Installation of Optical Fibers and Electrical Conductors.
(A) In Cable Trays and Raceways.
Conductive optical fiber cables contained in an armored or metal-clad-type sheath and nonconductive optical fiber cables shall be permitted to occupy the same cable tray or raceway with conductors for electric light, power, Class 1, non-power-limited fire alarm, Type ITC, or medium-power network-powered broadband communications circuits operating at 1000 volts or less. Conductive optical fiber cables without an armored or metal-clad-type sheath shall not be permitted to occupy the same cable tray or raceway with conductors for electric light, power, Class 1, non-power-limited fire alarm, Type ITC, or medium-power network-powered broadband communications circuits, unless all of the conductors of electric light, power, Class 1, non-power-limited fire alarm, and medium-power network-powered broadband communications circuits are separated from all of the optical fiber cables by a permanent barrier or listed divider.
(B) In Cabinets, Outlet Boxes, and Similar Enclosures.
Nonconductive optical fiber cables shall not be permitted to occupy the same cabinet, outlet box, panel, or similar enclosure housing the electrical terminations of an electric light, power, Class 1, non-power-limited fire alarm, or medium-power network-powered broadband communications circuit unless one or more of the following conditions exist:

(1) The nonconductive optical fiber cables are functionally associated with the electric light, power, Class 1, non-power-limited fire alarm, or medium-power network-powered broadband communications circuit.

(2) The conductors for electric light, power, Class 1, non-power-limited fire alarm, Type ITC, or medium-power network-powered broadband communications circuits operate at 1000 volts or less.

(3) The nonconductive optical fiber cables and the electrical terminations of electric light, power, Class 1, non-power-limited fire alarm, or medium-power network-powered broadband communications circuit are installed in factory- or field-assembled control centers.

(4) The nonconductive optical fiber cables are installed in an industrial establishment where conditions of maintenance and supervision ensure that only qualified persons service the installation.

When optical fibers are within the same hybrid cable for electric light, power, Class 1, non-power-limited fire alarm, or medium-power network-powered broadband communications circuits operating at 1000 volts or less, they shall be permitted to be installed only where the functions of the optical fibers and the electrical conductors are associated.
Optical fibers in hybrid optical fiber cables containing only current-carrying conductors for electric light, power, or Class 1 circuits rated 1000 volts or less shall be permitted to occupy the same cabinet, cable tray, outlet box, panel, raceway, or other termination enclosure with conductors for electric light, power, or Class 1 circuits operating at 1000 volts or less.
Optical fibers in hybrid optical fiber cables containing current-carrying conductors for electric light, power, or Class 1 circuits rated over 1000 volts shall be permitted to occupy the same cabinet, cable tray, outlet box, panel, raceway, or other termination enclosure with conductors for electric light, power, or Class 1 circuits in industrial establishments, where conditions of maintenance and supervision ensure that only qualified persons service the installation.
(C) With Other Circuits.
Conductive and nonconductive optical fiber cables shall be permitted in the same raceway, cable tray, box, enclosure, or cable routing assembly, with conductors of any of the following:

(1) Class 2 and Class 3 remote-control, signaling, and power-limited circuits in compliance with 645.5(E)(2) or Parts I and II of Article 725

Important Notice: This document has been provided in Microsoft Word format for the purpose of NEC® Code-Making Panel Task Group work. This document is the property of the National Fire Protection Association (NFPA), and may not be used for any other purpose or distributed to any other persons or parties outside of the NEC® Code-Making Panels.

(2) Power-limited fire alarm systems in compliance with Parts I and III of Article 760

(3) Communications circuits in compliance with Parts I and V of Article 805

(4) Community antenna television and radio distribution systems in compliance with Parts I and V of Article 820

(5) Low-power network-powered broadband communications circuits in compliance with Parts I and V of Article 830

(D) Support of Optical Fiber Cables.
Raceways shall be used for their intended purpose. Optical fiber cables shall not be strapped, taped, or attached by any means to the exterior of any conduit or raceway as a means of support.
Exception: Overhead (aerial) spans of optical fiber cables shall be permitted to be attached to the exterior of a raceway-type mast intended for the attachment and support of such cables.

Part IV. Installation Methods Within Buildings
X22.x [800.110] Raceways, Cable Routing Assemblies, and Cable Trays.
(A) Types of Raceways.
Wires and cables shall be permitted to be installed in raceways that comply with 800.110(A)(1), 800.110(A)(2), or 800.110(A)(3).
(1) Raceways Recognized in Chapter 3.
Wires and cables shall be permitted to be installed in any raceway included in Chapter 3. The raceways shall be installed in accordance with Chapter 3.
(2) Communications Raceways.
Wires and cables shall be permitted to be installed in plenum communications raceways, riser communications raceways, and general-purpose communications raceways selected in accordance with Table 800.154(b), listed in accordance with 800.182, and installed in accordance with 800.113 and 362.24 through 362.56, where the requirements applicable to electrical nonmetallic tubing (ENT) apply.
(3) Innerduct for Communications Wires and Cables, Coaxial Cables, or Network-Powered Broadband Communications Cables.
Listed plenum communications raceways, listed riser communications raceways, and listed general-purpose communications raceways selected in accordance with Table 800.154(b) shall be permitted to be installed as innerduct in any type of listed raceway permitted in Chapter 3.
(C) Cable Routing Assemblies.
Cables shall be permitted to be installed in plenum cable routing assemblies, riser cable routing assemblies, and general-purpose cable routing assemblies selected in accordance with Table 800.154(c), listed in accordance with 800.182, and installed in accordance with 800.110(C)(1) and (C)(2) and 800.113.
(1) Horizontal Support.
Cable routing assemblies shall be supported where run horizontally at intervals not to exceed 900 mm (3 ft) and at each end or joint, unless listed for other support intervals. In no case shall the distance between supports exceed 3 m (10 ft).
(2) Vertical Support.
Vertical runs of cable routing assemblies shall be supported at intervals not exceeding 1.2 m (4 ft), unless listed for other support intervals, and shall not have more than one joint between supports.
(D) Cable Trays.
Wires and cables and communications raceways shall be permitted to be installed in metal or listed nonmetallic cable tray systems. Ladder cable trays shall be permitted to support cable routing assemblies.
X22.x [800.113] Installation of Cables Used for Communications Circuits, Communications Wires, Cable Routing Assemblies, and Communications Raceways.
Installation of wires, cables, cable routing assemblies, and communications raceways shall comply with 800.113(A) through (L). Installation of cable routing assemblies and communications raceways shall comply also with 800.110. Types of cables used by this section are identified in Table 800.113.
Table 800.113 Cables Used for Communications Circuits

	Listed Cable Types
Plenum cables	CMP, CATVP, BLP, OFNP, OFCP
Riser cables	CMR, CATVR, BMR, BLR, OFNR, OFCR
General-purpose cables	CMG, CM, CATV, BM, BL, OFNG, OFN, OFCG, OFC
Limited-use cables	CMX, CATVX, BLX
Undercarpet	CMUC
Underground	BMU, BLU

(A) Listing.

Important Notice: This document has been provided in Microsoft Word format for the purpose of NEC® Code-Making Panel Task Group work. This document is the property of the National Fire Protection Association (NFPA), and may not be used for any other purpose or distributed to any other persons or parties outside of the NEC® Code-Making Panels.

Cables used for communications circuits, communications wires, cable routing assemblies, and communications raceways installed in buildings shall be listed and installed in accordance with the limitations of the listing.
Exception: Cables installed in compliance with 800.48 shall not be required to be listed.

(B) Ducts Specifically Fabricated for Environmental Air.
Installations of cables used for communications circuits, communications wires, cable routing assemblies, and communications raceways in ducts specifically fabricated for environmental air shall be in accordance with 800.113(B)(1) and (B)(2).

(1) Uses Permitted.
The following cables shall be permitted in ducts specifically fabricated for environmental air as described in 300.22(B) if they are directly associated with the air distribution system:

(1) Plenum cables up to 1.22 m (4 ft) in length

(2) Plenum, rise, general-purpose, and limited-use cables installed in raceways that are installed in compliance with 300.22(B)

(2) Uses Not Permitted.
The following cables, wires, cable routing assemblies, and communications raceways shall not be permitted in ducts specifically fabricated for environmental air as described in 300.22(B):

(1) Plenum, riser, and general-purpose communications raceways

(2) Plenum, riser, and general-purpose cable routing assemblies

(3) Riser, general-purpose, and limited-use cables

(4) Type CMUC cables and wires

(5) Types BMU and BLU cables

(6) Communications wires

(7) Hybrid power and communications cables

Informational Note: See NFPA 90A-2021, *Standard for the Installation of Air-Conditioning and Ventilating Systems*, for information on fire protection of wiring installed in fabricated ducts.

(C) Other Spaces Used for Environmental Air (Plenums).
Installations of cables used for communications circuits, communications wires, cable routing assemblies, and communications raceways in other spaces used for environmental air (plenums) shall be in accordance with 800.113(C)(1) and (C)(2).

(1) Uses Permitted.
The following cables, wires, cable routing assemblies, and communications raceways shall be permitted in other spaces used for environmental air as described in 300.22(C):

(1) Plenum cables

(2) Plenum communications raceways

(3) Plenum cable routing assemblies

(4) Plenum cables installed in plenum communications raceways

(5) Plenum cables installed in plenum cable routing assemblies

(6) Plenum cables and plenum communications raceways supported by open metal cable tray systems

(7) Plenum, riser, general-purpose, and limited-use cables, and communications wires installed in raceways that are installed in compliance with 300.22(C)

(8) Plenum, rise, general-purpose, limited-use cables and plenum, riser, and general-purpose communications raceways supported by solid bottom metal cable trays with solid metal covers in other spaces used for environmental air (plenums) as described in 300.22(C)

(9) Plenum, riser, general-purpose, and limited-use cables installed in plenum, riser, and general-purpose communications raceways supported by solid bottom metal cable trays with solid metal covers in other spaces used for environmental air (plenums) as described in 300.22(C)

(2) Uses Not Permitted.

Important Notice: This document has been provided in Microsoft Word format for the purpose of NEC® Code-Making Panel Task Group work. This document is the property of the National Fire Protection Association (NFPA), and may not be used for any other purpose or distributed to any other persons or parties outside of the NEC® Code-Making Panels.

The following cables, wires, cable routing assemblies, and communications raceways shall not be permitted in other spaces used for environmental air as described in 300.22(C):

(1) Riser, general-purpose, and limited-use cables

(2) Riser and general-purpose communications raceways

(3) Riser and general-purpose cable routing assemblies

(4) Type CMUC cables and wires

(5) Types BMR, BM, BMU, and BLU cables

(6) Communications wires

(7) Hybrid power and communications cables

Informational Note: See NFPA 90A-2021, *Standard for the Installation of Air-Conditioning and Ventilating Systems*, for information on fire protection of wiring installed in other spaces used for environmental air.

(D) Risers — Cables, Cable Routing Assemblies, and Communications Raceways in Vertical Runs.
Installations of cables used for communications circuits, communications wires, cable routing assemblies, and communications raceways in risers shall be in accordance with 800.113(D)(1) and (D)(2).

(1) Uses Permitted.
The following cables, cable routing assemblies, and communications raceways shall be permitted in vertical runs penetrating one or more floors and in vertical runs in a shaft:

(1) Plenum and riser cables

(2) Plenum and riser communications raceways

(3) Plenum and riser cable routing assemblies

(4) Plenum and riser cables installed in the following:

a. Plenum communications raceways

b. Riser communications raceways

c. Plenum cable routing assemblies

d. Riser cable routing assemblies

(2) Uses Not Permitted.
The following cables, wires, cable routing assemblies, and communications raceways shall not be permitted in risers:

(1) General-purpose and limited-use cables

(2) General-purpose communications raceways

(3) General-purpose cable routing assemblies

(4) Type CMUC cables and wires

(5) Types BMR, BM, BMU, and BLU cables

(6) Communications wires

(7) Hybrid power and communications cables

Informational Note: See 800.26 for firestop requirements for floor penetrations.

(E) Risers — Cables and Innerducts in Metal Raceways.
Installations of cables used for communications circuits, communications wires, cable routing assemblies, and communications raceways in metal raceways in a riser having firestops at each floor shall be in accordance with 800.113(E)(1) and (E)(2).

(1) Uses Permitted.
The following cables and innerducts shall be permitted in metal raceways in a riser having firestops at each floor:

(1) Plenum, riser, general-purpose, and limited-use cables

(2) Plenum, riser, and general-purpose communications raceways (innerduct)

Important Notice: This document has been provided in Microsoft Word format for the purpose of NEC® Code-Making Panel Task Group work. This document is the property of the National Fire Protection Association (NFPA), and may not be used for any other purpose or distributed to any other persons or parties outside of the NEC® Code-Making Panels.

(3) Plenum, riser, general-purpose, and limited-use cables installed in the following:

a. Plenum communications raceways (innerduct)

b. Riser communications raceways (innerduct)

c. General-purpose communications raceways (innerduct)

(2) Uses Not Permitted.
The following cables, wires, cable routing assemblies, and communications raceways shall not be permitted in metal raceways in a riser having firestops at each floor:

(1) Plenum, riser, and general-purpose cable routing assemblies

(2) Type CMUC cables and wires

(3) Types BMR, BM, BMU, and BLU cables

(4) Communications wires

(5) Hybrid power and communications cables

Informational Note: See 800.26 for firestop requirements for floor penetrations.
(F) Risers — Cables, Cable Routing Assemblies, and Communications Raceways in Fireproof Shafts.
Installations of cables used for communications circuits, communications wires, cable routing assemblies, and communications raceways in fireproof riser shafts having firestops at each floor shall be in accordance with 800.113(F)(1) and (F)(2).
(1) Uses Permitted.
The following cables, cable routing assemblies, and communications raceways shall be permitted to be installed in fireproof riser shafts having firestops at each floor:

(1) Plenum, riser, general-purpose, and limited-use cables

(2) Plenum, riser, and general-purpose communications raceways

(3) Plenum, riser, and general-purpose cable routing assemblies

(4) Plenum, riser, general-purpose, and limited-use cables installed in the following:

a. Plenum communications raceways

b. Riser communications raceways

c. General-purpose communications raceways

d. Plenum cable routing assemblies

e. Riser cable routing assemblies

f. General-purpose cable routing assemblies

(2) Uses Not Permitted.
The following cables, wires, cable routing assemblies, and communications raceways shall not be permitted in metal raceways in fireproof riser shafts having firestops at each floor:

(1) Type CMUC cables and wires

(2) Type BMU and BLU cables

(3) Communications wires

(4) Hybrid power and communications cables

Informational Note: See 800.26 for firestop requirements for floor penetrations.
(G) Risers — One- and Two-Family Dwellings.
Installations of cables used for communications circuits, communications wires, cable routing assemblies, and communications raceways in risers in one- and two-family dwellings shafts shall be in accordance with 800.113(G)(1) and (G)(2).
(1) Uses Permitted.

Important Notice: This document has been provided in Microsoft Word format for the purpose of NEC® Code-Making Panel Task Group work. This document is the property of the National Fire Protection Association (NFPA), and may not be used for any other purpose or distributed to any other persons or parties outside of the NEC® Code-Making Panels.

The following cables, cable routing assemblies, and communications raceways shall be permitted in one- and two-family dwellings:

(1) Plenum, riser, and general-purpose cables

(2) Limited-use cables less than 6 mm (0.25 in.) in diameter

(3) Plenum, riser, and general-purpose communications raceways

(4) Plenum, riser, and general-purpose cable routing assemblies

(5) Plenum, riser, and general-purpose cables installed in the following:

a. Plenum communications raceways

b. Riser communications raceways

c. General-purpose communications raceways

d. Plenum cable routing assemblies

e. Riser cable routing assemblies

f. General-purpose cable routing assemblies

(2) Uses Not Permitted.
The following cables and wires shall not be permitted in risers in one- and two-family dwellings:

(1) Type CMUC cables and wires

(2) Type BMU and BLU cables

(3) Communications wires

(4) Hybrid power and communications cables

(H) Cable Trays.
Installations of cables used for communications circuits, communications wires, cable routing assemblies, and communications raceways supported by cable trays shall be in accordance with 800.113(H)(1) and (H)(2).
(1) Uses Permitted.
The following wires, cables, and communications raceways shall be permitted to be supported by cable trays:

(1) Plenum, riser, and general-purpose cables

(2) Plenum, riser, and general-purpose communications raceways

(3) Communications wires, plenum, riser, and general-purpose cables installed in the following:

a. Plenum communications raceways

b. Riser communications raceways

c. General-purpose communications raceways

(2) Uses Not Permitted.
The following cables and wires shall not be supported by cable trays:

(1) Limited-use cables

(2) Type CMUC cables and wires

(3) Type BMU and BLU cables

(4) Communications wires

(5) Hybrid power and communications cables

(I) Distributing Frames and Cross-Connect Arrays.
Installations of cables used for communications circuits, communications wires, cable routing assemblies, and communications raceways in distributing frames and cross-connect arrays shall be in accordance with 800.113(I)(1) and (I)(2).

Important Notice: This document has been provided in Microsoft Word format for the purpose of NEC® Code-Making Panel Task Group work. This document is the property of the National Fire Protection Association (NFPA), and may not be used for any other purpose or distributed to any other persons or parties outside of the NEC® Code-Making Panels.

(1) Uses Permitted.
The following wires, cables, cable routing assemblies, and communications raceways shall be permitted to be installed in distributing frames and cross-connect arrays:

(1) Plenum, riser, and general-purpose cables and communications wires

(2) Plenum, riser, and general-purpose communications raceways

(3) Plenum, riser, and general-purpose cable routing assemblies

(4) Communications wires, plenum, riser, and general-purpose cables installed in the following:

a. Plenum communications raceways

b. Riser communications raceways

c. General-purpose communications raceways

d. Plenum cable routing assemblies

e. Riser cable routing assemblies

f. General-purpose cable routing assemblies

(2) Uses Not Permitted.
The following cables and wires shall not be installed in distributing frames and cross-connect arrays:

(1) Types BMR, BM, BMU, and BLU cables

(2) Limited-use cables

(3) Type CMUC cables and wires

(4) Hybrid power and communications cables

(J) Other Building Locations.
Installations of cables used for communications circuits, cable communications wires, routing assemblies, and communications raceways in building locations other than those covered in 800.113(B) through (I) shall be in accordance with 800.113(J)(1) and (J)(2).
(1) Uses Permitted.
The following wires, cables, cable routing assemblies, and communications raceways shall be permitted to be installed in building locations other than the locations covered in 800.113(B) through (I):

(1) Plenum, riser, and general-purpose cables

(2) Limited-use cables with a maximum of 3 m (10 ft) of exposed length in nonconcealed spaces

(3) Plenum, riser, and general-purpose communications raceways

(4) Plenum, riser, and general-purpose cable routing assemblies

(5) Communications wires, plenum, riser, and general-purpose cables installed in the following:

a. Plenum communications raceways

b. Riser communications raceways

c. General-purpose communications raceways

(6) Plenum, riser, and general-purpose cables installed in the following:

a. Plenum cable routing assemblies

b. Riser cable routing assemblies

c. General-purpose cable routing assemblies

(7) Communications wires and plenum, riser, general-purpose, and limited-use cables installed in raceways recognized in Chapter 3

(8) Type CMUC undercarpet communications wires and cables installed under carpet, modular flooring, and planks

Important Notice: This document has been provided in Microsoft Word format for the purpose of NEC® Code-Making Panel Task Group work. This document is the property of the National Fire Protection Association (NFPA), and may not be used for any other purpose or distributed to any other persons or parties outside of the NEC® Code-Making Panels.

(2) Uses Not Permitted.
The following cables, wires, cable routing assemblies, and communications raceways shall not be installed in building locations other than the locations covered in 800.113(B) through (I):

(1) Types BMU and BLU cables

(2) Communications wires

(3) Hybrid power and communications cables

(K) Multifamily Dwellings.
Installations of cables used for communications circuits, communications wires, cable routing assemblies, and communications raceways in multifamily dwellings shall be in accordance with 800.113(K)(1) and (K)(2).
(1) Uses Permitted.
The following cables, cable routing assemblies, and communications raceways shall be permitted to be installed in multifamily dwellings in locations other than the locations covered in 800.113(B) through (G):

(1) Plenum, riser, and general-purpose cables

(2) Limited-use cables less than 6 mm (0.25 in.) in diameter in nonconcealed spaces

(3) Plenum, riser, and general-purpose communications raceways

(4) Plenum, riser, and general-purpose cable routing assemblies

(5) Communications wires and plenum, riser, and general-purpose cables installed in the following:

a. Plenum communications raceways

b. Riser communications raceways

c. General-purpose communications raceways

(6) Plenum, riser, and general-purpose cables installed in the following:

a. Plenum cable routing assemblies

b. Riser cable routing assemblies

c. General-purpose cable routing assemblies

(7) Communications wires and plenum, riser, general-purpose, and limited-use cables installed in raceways recognized in Chapter 3
(8) Type CMUC under-carpet communications wires and cables installed under carpet, modular flooring, and planks
(2) Uses Not Permitted.
The following cables, cable routing assemblies, and communications raceways shall not be installed in multifamily dwellings in locations other than the locations covered in 800.113(B) through (G):

(1) Types BMU and BLU cables

(2) Communications wires

(3) Hybrid power and communications cables

(L) One- and Two-Family Dwellings.
Installations of cables used for communications circuits, communications wires, cable routing assemblies, and communications raceways in one- and two-family dwellings in locations other than those covered in 800.113(B) through (F) shall be in accordance with 800.113(L)(1) and (L)(2).
(1) Uses Permitted.
The following wires, cables, cable routing assemblies, and communications raceways shall be permitted to be installed in one- and two-family dwellings in locations other than the locations covered in 800.113(B) through (F):

(1) Plenum, riser, and general-purpose cables

(2) Limited-use cables less than 6 mm (0.25 in.) in diameter

(3) Plenum, riser, and general-purpose communications raceways

(4) Plenum, riser, and general-purpose cable routing assemblies

Important Notice: This document has been provided in Microsoft Word format for the purpose of NEC® Code-Making Panel Task Group work. This document is the property of the National Fire Protection Association (NFPA), and may not be used for any other purpose or distributed to any other persons or parties outside of the NEC® Code-Making Panels.

(5) Communications wires, plenum, riser, and general-purpose cables installed in the following:

a. Plenum communications raceways

b. Riser communications raceways

c. General-purpose communications raceways

(6) Plenum, riser, and general-purpose cables installed in the following:

a. Plenum cable routing assemblies

b. Riser cable routing assemblies

c. General-purpose cable routing assemblies

(7) Communications wires and plenum, riser, general-purpose, and limited-use cables installed in raceways recognized in Chapter 3

(8) Type CMUC under-carpet communications wires and cables installed under carpet, modular flooring, and planks

(9) Hybrid power and communications cable listed in accordance with 800.179

(2) Uses Not Permitted.

The following cables, wires, cable routing assemblies, and communications raceways shall not be installed in one- and two-family dwellings in locations other than those covered in 800.113(B) through (F):

(1) Types BMU and BLU cables

(2) Communications wires

X22.x [800.133] Installation of Communications Wires and Cables and CATV-Type Coaxial Cables.

Installation of communications wires and cables, from the protector to the equipment, or where no protector is required, communications wires and cables attached to the outside or inside of the building, shall comply with 800.133(A) and 800.133(B). Installation of CATV-type coaxial cables, beyond the point of grounding as defined in 820.93, shall comply with 800.133(A) through (C).

(A) In Raceways, Cable Trays, Boxes, Cables, Enclosures, and Cable Routing Assemblies.

(1) Other Circuits.

Communications cables and CATV-type coaxial cables shall be permitted in the same raceway, cable tray, box, enclosure, or cable routing assembly together and with jacketed cables of any of the following:

(1) Class 2 and Class 3 remote-control, signaling, and power-limited circuits in compliance with 645.5(E)(2) or Parts I and II of Article 725

(2) Power-limited fire alarm systems in compliance with Parts I and III of Article 760

(3) Nonconductive and conductive optical fiber cables in compliance with Parts I and V of Article 770

(4) Communications circuits in compliance with Parts I and IV of Articles 800 and 805

(5) Community antenna television and radio distribution systems in compliance with Parts I and V of Articles 800 and 820

(6) Low-power network-powered broadband communications circuits in compliance with Parts I and V of Articles 800 and 830

(2) Class 2 and Class 3 Circuits.

Class 1 circuits shall not be run in the same cable with communications circuits. Class 2 and Class 3 circuit conductors shall be permitted in the same listed communications cable with communications circuits.

(3) Electric Light, Power, Class 1, Non-Power-Limited Fire Alarm, and Medium-Power Network-Powered Broadband Communications Circuits in Raceways, Compartments, and Boxes.

Communications wires and cables and CATV-type coaxial cables shall not be placed in any raceway, compartment, outlet box, junction box, or similar fitting with conductors of electric light, power, Class 1, non-power-limited fire alarm, or medium-power network-powered broadband communications circuits.

Exception No. 1: Communications wires and cables and CATV-type coaxial cables shall be permitted to be placed in any raceway, compartment, outlet box, junction box, or other enclosures with conductors of electric light, power, Class 1, non-power-limited fire alarm, or medium-power network-powered broadband communications circuits where all of the conductors of electric light, power, Class 1, non-power-limited fire alarm, and medium-power network-powered broadband communications circuits are separated from all of the communications wires and cables and CATV-type coaxial cables by a permanent barrier or listed divider.

Important Notice: This document has been provided in Microsoft Word format for the purpose of NEC® Code-Making Panel Task Group work. This document is the property of the National Fire Protection Association (NFPA), and may not be used for any other purpose or distributed to any other persons or parties outside of the NEC® Code-Making Panels.

Exception No. 2: Communications wires and cables and CATV-type coaxial cables shall be permitted to be placed in outlet boxes, junction boxes, or similar fittings or compartments with power conductors where such conductors are introduced solely for power supply to the communications and coaxial cable system distribution equipment. The power circuit conductors shall be routed within the enclosure to maintain a minimum 6 mm (1/4 in.) separation from the communications wires and cables and the CATV- type coaxial cables.
Exception No. 3: Separation of circuits shall not be required in elevator traveling cables constructed in accordance with by 620.36.

(B) Other Applications.

Communications wires and cables and CATV-type coaxial cables shall be separated at least 50 mm (2 in.) from conductors of any electric light, power, Class 1, non-power-limited fire alarm, or medium-power network-powered broadband communications circuits.
Exception No. 1: Separation shall not be required where either (1) all of the conductors of electric light, power, Class 1, non-power-limited fire alarm, and medium-power network-powered broadband communications circuits are in a raceway or in metal-sheathed, metal-clad, nonmetallic-sheathed, Type AC or Type UF cables, or (2) all of the communications wires and cables and all of the CATV-type coaxial cables are encased in raceway.
Exception No. 2: Separation shall not be required where the communications wires and cables and CATV-type coaxial cables are permanently separated from the conductors of electric light, power, Class 1, non-power-limited fire alarm, and medium-power network-powered broadband communications circuits by a continuous and firmly fixed nonconductor, such as porcelain tubes or flexible tubing, in addition to the insulation on the wire.

(C) Support of Communications Wires and Cables and CATV-Type Coaxial Cables.

Raceways shall be used for their intended purpose. Communications wires and cables and CATV-type coaxial cables shall not be strapped, taped, or attached by any means to the exterior of any raceway as a means of support.
Exception: Overhead (aerial) spans of communications drop wires, communications cables, and CATV-type coaxial cables shall be permitted to be attached to the exterior of a raceway-type mast intended for the attachment and support of such wires and cables.

Part V. Installation Methods Within Buildings

X22.x [830.133] Installation of Network-Powered Broadband Communications Cables and Equipment.

Cable and equipment installations within buildings shall comply with 830.133(A) through (C), as applicable.

(A) Separation of Conductors.

(1) In Raceways, Cable Trays, Boxes, Enclosures, and Cable Routing Assemblies.

(a) *Low- and Medium-Power Network-Powered Broadband Communications Circuit Cables.* Low- and medium-power network-powered broadband communications cables shall be permitted in the same raceway, cable tray, box, enclosure, or cable routing assembly.

(b) *Low-Power Network-Powered Broadband Communications Circuit Cables with Other Circuits.* Low-power network-powered broadband communications cables shall be permitted in the same raceway, cable tray, box, enclosure, or cable routing assembly with jacketed cables of any of the following circuits:

(1) Class 2 and Class 3 remote-control, signaling, and power-limited circuits in compliance with Parts I and II of Article 725

(2) Power-limited fire alarm systems in compliance with Parts I and III of Article 760

(3) Communications circuits in compliance with Parts I and IV of Article 805

(4) Nonconductive and conductive optical fiber cables in compliance with Parts I and V of Article 770

(5) Community antenna television and radio distribution systems in compliance with Parts I and V of Article 820

(c) *Medium-Power Network-Powered Broadband Communications Circuit Cables with Optical Fiber Cables and Other Communications Cables*. Medium-power network-powered broadband communications cables shall not be permitted in the same raceway, cable tray, box, enclosure, or cable routing assembly with conductors of any of the following circuits:

(1) Communications circuits in compliance with Parts I and IV of Article 805

(2) Conductive optical fiber cables in compliance with Parts I and V of Article 770

(3) Community antenna television and radio distribution systems in compliance with Parts I and V of Article 820

(d) *Medium-Power Network-Powered Broadband Communications Circuit Cables with Other Circuits*. Medium-power network-powered broadband communications cables shall not be permitted in the same raceway, cable tray, box, enclosure, or cable routing assembly with conductors of any of the following circuits:

Important Notice: This document has been provided in Microsoft Word format for the purpose of NEC® Code-Making Panel Task Group work. This document is the property of the National Fire Protection Association (NFPA), and may not be used for any other purpose or distributed to any other persons or parties outside of the NEC® Code-Making Panels.

(1) Class 2 and Class 3 remote-control, signaling, and power-limited circuits in compliance with Parts I and II of Article 725

(2) Power-limited fire alarm systems in compliance with Parts I and III of Article 760

(e) *Electric Light, Power, Class 1, Nonpowered Broadband Communications Circuit Cables.* Network-powered broadband communications cable shall not be placed in any raceway, cable tray, compartment, outlet box, junction box, or similar fittings with conductors of electric light, power, Class 1, or non-power-limited fire alarm circuit cables.

Exception No. 1: Network-powered broadband communications cable shall be permitted to be placed in a raceway, cable tray, compartment, outlet box, junction box, or similar fittings with conductors of electric light, power, Class 1, or non-power-limited fire alarm circuit cables where all of the conductors of electric light, power, Class 1, non-power-limited fire alarm circuits are separated from all of the network-powered broadband communications cables by a permanent barrier or listed divider.

Exception No. 2: Where power circuit conductors in outlet boxes, junction boxes, or similar fittings or compartments where such conductors are introduced solely for power supply to the network-powered broadband communications system distribution equipment, the power circuit conductors shall be routed within the enclosure to maintain a minimum 6 mm (1/4 in.) separation from network-powered broadband communications cables.

(2) Other Applications.

Network-powered broadband communications cable shall be separated at least 50 mm (2 in.) from conductors of any electric light, power, Class 1, and non-power-limited fire alarm circuits.

Exception No. 1: Separation shall not be required where: (1) all of the conductors of electric light, power, Class 1, and non-power-limited fire alarm circuits are in a raceway or in metal-sheathed, metal-clad, nonmetallic-sheathed, Type AC, or Type UF cables, or (2) all of the network-powered broadband communications cables are encased in a raceway.

Exception No. 2: Separation shall not be required where the network-powered broadband communications cables are permanently separated from the conductors of electric light, power, Class 1, and non-power-limited fire alarm circuits by a continuous and firmly fixed nonconductor, such as porcelain tubes or flexible tubing, in addition to the insulation on the wire.

(B) Support of Network-Powered Broadband Communications Cables.

Raceways shall be used for their intended purpose. Network-powered broadband communications cables shall not be strapped, taped, or attached by any means to the exterior of any conduit or raceway as a means of support.

X22.x [830.160] Bends.

Bends in network broadband cable shall be made so as not to damage the cable. The radius of the curve of the inner edge of any bend shall not be less than 10 times the diameter of the cable.

Informational Note: See ANSI/TIA-568.0-E *Generic Telecommunications Cabling for Customer Premises*, for information on bend radii of network broadband cable during different types of installation conditions.

APPLICATIONS

X22.x [760.154] Applications of Listed PLFA Cables.

PLFA cables shall comply with the requirements described in Table 760.154 or where cable substitutions are made as shown in 760.154(A). Where substitute cables are installed, the wiring requirements of Article 760, Parts I and III, shall apply. Types FPLP-CI, FPLR-CI, and FPL-CI cables shall be permitted to be installed to provide 2-hour circuit integrity rated cables.

Table 760.154 Applications of Listed PLFA Cables in Buildings

Applications		Cable Type		
		FPLP & FPLP-CI	FPLR & FPLR-CI	FPL & FPL-CI
In fabricated ducts as described in 300.22(B)	In fabricated ducts	Y*	N	N
	In metal raceway that complies with 300.22(B)	Y*	Y*	Y*
In other spaces used for environmental air as described in 300.22©	In other spaces used for environmental air	Y*	N	N

Important Notice: This document has been provided in Microsoft Word format for the purpose of NEC® Code-Making Panel Task Group work. This document is the property of the National Fire Protection Association (NFPA), and may not be used for any other purpose or distributed to any other persons or parties outside of the NEC® Code-Making Panels.

Applications		Cable Type		
		FPLP & FPLP-CI	FPLR & FPLR-CI	FPL & FPL-CI
	In metal raceway that complies with 300.22(C)	Y*	Y*	Y*
	In plenum communications raceways	Y*	N	N
	In plenum cable routing assemblies	Y*	N	N
	Supported by open metal cable trays	Y*	N	N
	Supported by solid bottom metal cable trays with solid metal covers	Y*	Y*	Y*
In risers	In vertical runs	Y*	Y*	N
	In metal raceways	Y*	Y*	Y*
	In fireproof shafts	Y*	Y*	Y*
	In plenum communications raceways	Y*	Y*	N
	In plenum cable routing assemblies	Y*	Y*	N
	In riser communications raceways	Y*	Y*	N
	In riser cable routing assemblies	Y*	Y*	N
	In one- and two-family dwellings	Y*	Y*	Y*
Within buildings in other than air-handling spaces and risers	General	Y*	Y*	Y*
	Supported by cable trays	Y*	Y*	Y*
	In any raceway recognized in Chapter 3	Y*	Y*	Y*
	In plenum communications raceway	Y*	Y*	Y*
	In plenum cable routing assemblies	Y*	Y*	Y*
	In riser communications raceways	Y*	Y*	Y*
	In riser cable routing assemblies	Y*	Y*	Y*
	In general-purpose communications raceways	Y*	Y*	Y*
	In general-purpose cable routing assemblies	Y*	Y*	Y*

Note:
"N" indicates that the cable type shall not be permitted to be installed in the application.
"Y*" indicates that the cable type shall be permitted to be installed in the application subject to the limitations described in 760.130 through 760.14**)**

X22.x [770.154] Applications of Listed Optical Fiber Cables.

Permitted and nonpermitted applications of listed optical fiber cables shall be as indicated in Table 770.154(a). The permitted applications shall be subject to the installation requirements of 770.110 and 770.113. The substitutions for optical fiber cables in Table 770.154(b) and illustrated in Figure 770.154 shall be permitted.

Table 770.154(a) Applications of Listed Optical Fiber Cables in Buildings

Applications		Listed Optical Fiber Cable Type		
		OFNP, OFCP	OFNR, OFCR	OFNG, OFCG, OFN, OFC
In ducts specifically fabricated for environmental air as described in 300.22(B)	In fabricated ducts	Y*	N	N
	In metal raceway that complies with 300.22(B)	Y*	Y*	Y*
In other spaces used for environmental air (plenums) as described in 300.22(C)	In other spaces used for environmental air	Y*	N	N

Important Notice: This document has been provided in Microsoft Word format for the purpose of NEC® Code-Making Panel Task Group work. This document is the property of the National Fire Protection Association (NFPA), and may not be used for any other purpose or distributed to any other persons or parties outside of the NEC® Code-Making Panels.

Applications		Listed Optical Fiber Cable Type		
		OFNP, OFCP	**OFNR, OFCR**	**OFNG, OFCG, OFN, OFC**
	In metal raceway that complies with 300.22(C)	Y*	Y*	Y*
	In plenum communications raceways	Y*	N	N
	In plenum cable routing assemblies	Y*	N	N
	Supported by open metal cable trays	Y*	N	N
	Supported by solid bottom metal cable trays with solid metal covers	Y*	Y*	Y*
In risers	In vertical runs	Y*	Y*	N
	In metal raceways	Y*	Y*	Y*
	In fireproof shafts	Y*	Y*	Y*
	In plenum communications raceways	Y*	Y*	N
	In plenum cable routing assemblies	Y*	Y*	N
	In riser communications raceways	Y*	Y*	N
	In riser cable routing assemblies	Y*	Y*	N
	In one- and two-family dwellings	Y*	Y*	Y*
Within buildings in other than air-handling spaces and risers	General	Y*	Y*	Y*
	Supported by cable trays	Y*	Y*	Y*
	In distributing frames and cross-connect arrays	Y*	Y*	Y*
	In any raceway recognized in Chapter 3	Y*	Y*	Y*
	In plenum communications raceway	Y*	Y*	Y*
	In plenum cable routing assemblies	Y*	Y*	Y*
	In riser communications raceways	Y*	Y*	Y*
	In riser cable routing assemblies	Y*	Y*	Y*
	In general-purpose communications raceways	Y*	Y*	Y*
	In general-purpose cable routing assemblies	Y*	Y*	Y*

Note: "N" indicates that the cable type shall not be permitted to be installed in the application. "Y*" indicates that the cable type shall be permitted to be installed in the application subject to the limitations described in 770.110 and 770.113.
Informational Note No. 1: Part V of Article 770 covers installation methods within buildings. This table covers the applications of listed optical fiber cables in buildings. The definition of *Point of Entrance* is in 770.2.
Informational Note No. 2: For information on the restrictions to the installation of optical fiber cables in ducts specifically fabricated for environmental air, see 770.113(B).

X22.x [800.154] Applications of Listed Communications Wires, Cables, and Raceways, and Listed Cable Routing Assemblies.

Permitted and nonpermitted applications of listed communications wires, cables, coaxial cables, network-powered broadband communications system cables and raceways, and listed cable routing assemblies, shall be in accordance with one of the following:

(1) Listed communications wires and cables as indicated in Table 800.154(a)

(2) Listed communications raceways as indicated in Table 800.154(b)

(3) Listed cable routing assemblies as indicated in Table 800.154(c)

Important Notice: This document has been provided in Microsoft Word format for the purpose of NEC® Code-Making Panel Task Group work. This document is the property of the National Fire Protection Association (NFPA), and may not be used for any other purpose or distributed to any other persons or parties outside of the NEC® Code-Making Panels.

The permitted applications shall be subject to the installation requirements of 800.110 and 800.113.

Table 800.154(a) Applications of Listed Communications Wires, Cables, and Network-Powered Broadband Communications System Cables in Buildings

Applications		Wire and Cable Type									
		Plenum	**Riser**	**BMR**	**General-Purpose**	**BM**	**Limited-Use**	**Undercarpet**	**BMU, BLU**	**Hybrid Power and Communications Cables**	**Communications Wires**
In ducts specifically fabricated for environmental air as described in 300.22(B)	In fabricated ducts	Y	N	N	N	N	N	N	N	N	N
	In metal raceway that complies with 300.22(B)	Y	Y	Y	Y	Y	Y	N	N	N	Y
In other spaces used for environmental air (plenums) as described in 300.22(C)	In other spaces used for environmental air	Y	N	N	N	N	N	N	N	N	N
	In metal raceway that complies with 300.22(C)	Y	Y	Y	Y	Y	Y	N	N	N	Y
	In plenum communications raceways	Y	N	N	N	N	N	N	N	N	N
	In plenum cable routing assemblies	Y	N	N	N	N	N	N	N	N	N
	Supported by open metal cable trays	Y	N	N	N	N	N	N	N	N	N
	Supported by solid bottom metal cable trays with solid metal covers	Y	Y	Y	Y	Y	Y	N	N	N	N
In risers	In vertical runs	Y	Y	Y	N	N	N	N	N	N	N
	In metal raceways	Y	Y	Y	Y	Y	Y	N	N	N	N
	In fireproof shafts	Y	Y	Y	Y	Y	Y	N	N	N	N
	In plenum communications raceways	Y	Y	N	N	N	N	N	N	N	N
	In plenum cable routing assemblies	Y	Y	N	N	N	N	N	N	N	N
	In riser communications raceways	Y	Y	N	N	N	N	N	N	N	N

Important Notice: This document has been provided in Microsoft Word format for the purpose of NEC® Code-Making Panel Task Group work. This document is the property of the National Fire Protection Association (NFPA), and may not be used for any other purpose or distributed to any other persons or parties outside of the NEC® Code-Making Panels.

Applications		Wire and Cable Type									
		Plenum	**Riser**	**BMR**	**General-Purpose**	**BM**	**Limited-Use**	**Undercarpet**	**BMU, BLU**	**Hybrid Power and Communications Cables**	**Communications Wires**
	In riser cable routing assemblies	Y	Y	N	N	N	N	N	N	N	N
	In one- and two-family dwellings	Y	Y	Y	Y	Y	Y	N	N	Y	N
Within buildings in other than air-handling spaces and risers	General	Y	Y	Y	Y	Y	Y	N	N	N	N
	In one- and two-family dwellings	Y	Y	Y	Y	Y	Y	Y	N	Y	N
	In multifamily dwellings	Y	Y	Y	Y	Y	Y	Y	N	N	N
	In nonconcealed spaces	Y	Y	Y	Y	Y	Y	Y	N	N	N
	Supported by cable trays	Y	Y	Y	Y	Y	N	N	N	N	N
	Under carpet, modular flooring, and planks	N	N	N	N	N	N	Y	N	N	N
	In distributing frames and cross-connect arrays	Y	Y	N	Y	N	N	N	N	N	Y
	In rigid metal conduit (RMC) and intermediate metal conduit (IMC)	Y	Y	Y	Y	Y	Y	Y	Y	Y	Y
	In any raceway recognized in Chapter 3	Y	Y	Y	Y	Y	Y	N	N	N	Y
	In plenum communications raceways	Y	Y	N	Y	N	N	N	N	N	Y
	In plenum cable routing assemblies	Y	Y	N	Y	N	N	N	N	N	Y
	In riser communications raceways	Y	Y	N	Y	N	N	N	N	N	Y

Important Notice: This document has been provided in Microsoft Word format for the purpose of NEC® Code-Making Panel Task Group work. This document is the property of the National Fire Protection Association (NFPA), and may not be used for any other purpose or distributed to any other persons or parties outside of the NEC® Code-Making Panels.

Applications		Wire and Cable Type									
		Plenum	Riser	BMR	General-Purpose	BM	Limited-Use	Undercarpet	BMU, BLU	Hybrid Power and Communications Cables	Communications Wires
	In riser cable routing assemblies	Y	Y	N	Y	N	N	N	N	N	Y
	In general-purpose communications raceways	Y	Y	N	Y	N	N	N	N	N	Y
	In general-purpose cable routing assemblies	Y	Y	N	Y	N	N	N	N	N	Y

Note: An "N" in the table indicates that the cable type shall not be installed in the application. A "Y" indicates that the cable type shall be permitted to be installed in the application subject to the limitations described in 800.113. The Riser column includes all riser cables except BMR, and the General-Purpose column includes all general-purpose cables except BM.

Informational Note No. 1: Part IV of Article 800 covers installation methods within buildings. This table covers the applications of listed communications wires, cables, and raceways in buildings.

Informational Note No. 2: For information on the restrictions to the installation of communications cables in fabricated ducts, see 800.113(B).

Table 800.154(b) Applications of Listed Communications Raceways in Buildings

Applications		Listed Communications Raceway Type		
		Plenum	Riser	General-Purpose
In ducts specifically fabricated for environmental air as described in 300.22(B)	In fabricated ducts	N	N	N
	In metal raceway that complies with 300.22(B)	N	N	N
In other spaces used for environmental air (plenums) as described in 300.22(C)	In other spaces used for environmental air	Y	N	N
	In metal raceway that complies with 300.22(C)	Y	Y	Y
	In plenum cable routing assemblies	N	N	N
	Supported by open metal cable trays	Y	N	N
	Supported by solid bottom metal cable trays with solid metal covers	Y	Y	Y
In risers	In vertical runs	Y	Y	N
	In metal raceways	Y	Y	Y
	In fireproof shafts	Y	Y	Y
	In plenum cable routing assemblies	N	N	N
	In riser cable routing assemblies	N	N	N
	In one- and two-family dwellings	Y	Y	Y
Within buildings in other than air-handling spaces and risers	General	Y	Y	Y
	In one- and two-family dwellings	Y	Y	Y
	In multifamily dwellings	Y	Y	Y
	In nonconcealed spaces	Y	Y	Y
	Supported by cable trays	Y	Y	Y

Important Notice: This document has been provided in Microsoft Word format for the purpose of NEC® Code-Making Panel Task Group work. This document is the property of the National Fire Protection Association (NFPA), and may not be used for any other purpose or distributed to any other persons or parties outside of the NEC® Code-Making Panels.

Applications		Listed Communications Raceway Type		
		Plenum	**Riser**	**General-Purpose**
	Under carpet, modular flooring, and planks	N	N	N
	In distributing frames and cross-connect arrays	Y	Y	Y
	In any raceway recognized in Chapter 3	Y	Y	Y
	In plenum cable routing assemblies	N	N	N
	In riser cable routing assemblies	N	N	N
	In general-purpose cable routing assemblies	N	N	N

Note: An "N" in the table indicates that the communications raceway type shall not be installed in the application. A "Y" indicates that the communications raceway type shall be permitted to be installed in the application, subject to the limitations described in 800.110 and 800.113.

Table 800.154(c) Applications of Listed Cable Routing Assemblies in Buildings

Applications		Listed Cable Routing Assembly Type		
		Plenum	**Riser**	**General-Purpose**
In ducts specifically fabricated for environmental air as described in 300.22(B)	In fabricated ducts	N	N	N
	In metal raceway that complies with 300.22(B)	N	N	N
In other spaces used for environmental air (plenums) as described in 300.22(C)	In other spaces used for environmental air	Y	N	N
	In metal raceway that complies with 300.22(C)	N	N	N
	In plenum communications raceways	N	N	N
	Supported by open metal cable trays	Y	N	N
	Supported by solid bottom metal cable trays with solid metal covers	N	N	N
In risers	In vertical runs	Y	Y	N
	In metal raceways	N	N	N
	In fireproof shafts	Y	Y	Y
	In plenum communications raceways	N	N	N
	In riser communications raceways	N	N	N
	In one- and two-family dwellings	Y	Y	Y
Within buildings in other than air-handling spaces and risers	General	Y	Y	Y
	In one- and two-family dwellings	Y	Y	Y
	In multifamily dwellings	Y	Y	Y
	In nonconcealed spaces	Y	Y	Y
	Supported by cable trays	Y	Y	Y
	Under carpet, modular flooring, and planks	N	N	N
	In distributing frames and cross-connect arrays	Y	Y	Y

Important Notice: This document has been provided in Microsoft Word format for the purpose of NEC® Code-Making Panel Task Group work. This document is the property of the National Fire Protection Association (NFPA), and may not be used for any other purpose or distributed to any other persons or parties outside of the NEC® Code-Making Panels.

Applications	Listed Cable Routing Assembly Type		
	Plenum	**Riser**	**General-Purpose**
In any raceway recognized in Chapter 3	N	N	N
In plenum communications raceways	N	N	N
In riser communications raceways	N	N	N
In general-purpose communications raceways	N	N	N

Note: An "N" in the table indicates that the cable routing assembly type shall not be installed in the application. A "Y" indicates that the cable routing assembly type shall be permitted to be installed in the application subject to the limitations described in 800.113.

OUTSIDE ENTERING BUILDINGS

Part II. Cables Outside and Entering Buildings
X22.x [770.44] Overhead (Aerial) Optical Fiber Cables.
Overhead optical fiber cables containing a non–current-carrying metallic member entering buildings shall comply with 800.44(A) and (B).
(A) On Poles and In-Span.
Where outside plant optical fiber cables and electric light or power conductors are supported by the same pole or are run parallel to each other in-span, the conditions described in 770.44(A)(1) through (A)(4) shall be met.
(1) Relative Location.
Where practicable, the outside plant optical fiber cables shall be located below the electric light or power conductors.
(2) Attachment to Cross-Arms.
Attachment of outside plant optical fiber cables to a cross-arm that carries electric light or power conductors shall not be permitted.
(3) Climbing Space.
The climbing space through outside plant optical fiber cables shall comply with the requirements of 225.14(B).
(4) Clearance.
Supply service drops and sets of overhead service conductors of 0 to 750 volts running above and parallel to optical fiber cable service drops shall have a minimum separation of 300 mm (12 in.) at any point in the span, including the point of their attachment to the building. Clearance of not less than 1.0 m (40 in.) shall be maintained between the two services at the pole.
(B) Above Roofs.
Outside plant optical fiber cables shall have a vertical clearance of not less than 2.5 m (8 ft) from all points of roofs above which they pass.
Exception No. 1: The requirement of 770.44(B) shall not apply to auxiliary buildings such as garages and the like.
Exception No. 2: A reduction in clearance above only the overhanging portion of the roof to not less than 450 mm (18 in.) shall be permitted if (1) not more than 1.2 m (4 ft) of optical fiber cable service drop cable passes above the roof overhang, and (2) the cable is terminated at a through- or above-the-roof raceway or approved support.
Exception No. 3: Where the roof has a slope of not less than 100 mm in 300 mm (4 in. in 12 in.), a reduction in clearance to not less than 900 mm (3 ft) shall be permitted.
Informational Note: See ANSI/IEEE C2-2017, *National Electric Safety Code, Part 2, Safety Rules for Overhead Lines*, for additional information regarding overhead wires and cables.
X22.x [770.47] Underground Optical Fiber Cables Entering Buildings.
Underground optical fiber cables entering buildings shall comply with 770.47(A) and (B).
(A) Underground Systems with Electric Light, Power, Class 1, or Non–Power-Limited Fire Alarm Circuit Conductors.
Underground conductive optical fiber cables entering buildings with electric light, power, Class 1, or non–power-limited fire alarm circuit conductors in a raceway, handhole enclosure, or manhole shall be located in a section separated from such conductors by means of brick, concrete, or tile partitions or by means of a suitable barrier.
(B) Direct-Buried Cables and Raceways.
Direct-buried conductive optical fiber cables shall be separated by at least 300 mm (12 in.) from conductors of any electric light, power, non-power-limited fire alarm circuit conductors, or Class 1 circuit.

Important Notice: This document has been provided in Microsoft Word format for the purpose of NEC® Code-Making Panel Task Group work. This document is the property of the National Fire Protection Association (NFPA), and may not be used for any other purpose or distributed to any other persons or parties outside of the NEC® Code-Making Panels.

Exception No. 1: Separation shall not be required where the electric service conductors are installed in raceways or have metal cable armor.
Exception No. 2: Separation shall not be required where electric light or power branch-circuit or feeder conductors, non-power-limited fire alarm circuit conductors, or Class 1 circuit conductors are installed in a raceway or in metal-sheathed, metal-clad, or Type UF or Type USE cables.

X22.x [770.48] Unlisted Cables Entering Buildings.

(A) Conductive and Nonconductive Cables.

Unlisted conductive and nonconductive outside plant optical fiber cables shall be permitted to be installed in building spaces, other than risers, ducts used for environmental air, plenums used for environmental air, and other spaces used for environmental air, where the length of the cable within the building, measured from its point of entrance, does not exceed 15 m (50 ft) and the cable enters the building from the outside and is terminated in an enclosure.

The point of entrance shall be permitted to be extended from the penetration of the external wall, roof, or floor slab by continuously enclosing the entrance optical fiber cables in rigid metal conduit (RMC) or intermediate metal conduit (IMC) to the point of emergence.

Informational Note: Splice cases or terminal boxes, both metallic and plastic types, typically are used as enclosures for splicing or terminating optical fiber cables.

(B) Nonconductive Cables in Raceway.

Unlisted nonconductive outside plant optical fiber cables shall be permitted to enter the building from the outside and shall be permitted to be installed in any of the following raceways:

(1) Intermediate metal conduit (IMC)

(2) Rigid metal conduit (RMC)

(3) Rigid polyvinyl chloride conduit (PVC)

(4) Electrical metallic tubing (EMT)

Unlisted nonconductive outside plant cables installed in rigid polyvinyl chloride conduit (PVC) or electrical metallic tubing (EMT) shall not be installed in risers, ducts used for environmental air, plenums used for environmental air, and other spaces used for environmental air.

Part II. Listing Requirements

722.179 Listing and Marking of Cables.

Cables installed in buildings shall be listed in accordance with 722.179(A) and marked in accordance with 722.179(B), and they shall be permitted to be marked in accordance with 722.179(C).

Exception: Optical fiber cables that are installed in compliance with 770.48 shall not be required to be listed.

(A) Listing of Cables.

Cables installed as wiring methods within buildings shall be listed as resistant to the spread of fire and other criteria in accordance with 722.179(A)(1) through (A)(16).

Informational Note No. 1: See UL 13, *Standard for Power-Limited Circuit Cables*, for applicable requirements for listing of Class 2 and Class 3 cable and power-limited tray cable (PLTC).

Informational Note No. 2: See UL 1424, *Cables for Power-Limited Fire-Alarm Circuits*, for applicable requirements for listing of power-limited fire alarm cable.

Informational Note No. 3: See UL 1651, *Optical Fiber Cable*, for applicable requirements for listing of optical fiber cable.

Informational Note No. 4: See UL 1400-2-2023, *Outline of Investigation for Fault-Managed Power Systems — Part 2: Requirements for Class 4 Cables*, for applicable requirements for listing of Class 4 cable.

(1) Plenum Cable.

Plenum cable shall be listed as suitable for use in ducts, plenums, and other space for environmental air and shall be listed as having adequate fire-resistant and low-smoke producing characteristics. Refer to Table 722.179(B) for plenum cable types.

Informational Note: See NFPA 262-2019, *Standard Method of Test for Flame Travel and Smoke of Wires and Cables for Use in Air-Handling Spaces*, for the test method used to determine that a cable is low-smoke producing and fire resistant, exhibiting a maximum peak optical density of 0.50 or less, an average optical density of 0.15 or less, and a maximum flame spread distance of 1.52 m (5 ft) or less.

(2) Riser Cable.

Riser cable shall be listed as suitable for use in a vertical run in a shaft or from floor to floor and shall be listed as having fire-resistant characteristics capable of preventing the carrying of fire from floor to floor.

Informational Note: See ANSI/UL 1666-2012, *Test for Flame Propagation Height of Electrical and Optical-Fiber Cable Installed Vertically in Shafts*, for the cable requirements defining fire-resistant characteristics capable of preventing the carrying of fire from floor to floor.

(3) General-Purpose Cable.

General-purpose cable shall be listed as resistant to the spread of fire and as suitable for general-purpose use, except for use in risers, ducts, plenums, and other space used for environmental air.

Important Notice: This document has been provided in Microsoft Word format for the purpose of NEC® Code-Making Panel Task Group work. This document is the property of the National Fire Protection Association (NFPA), and may not be used for any other purpose or distributed to any other persons or parties outside of the NEC® Code-Making Panels.

Informational Note: See UL 2556, *Wire and Cable Test Methods*, for defining resistant to the spread of fire. One method is to demonstrate that the cables do not spread fire to the top of the tray in the UL Flame Exposure, Vertical Tray Flame Test. The smoke measurements in the test method are not applicable.
A method of defining resistant to the spread of fire is for the damage (char length) not to exceed 1.5 m (4 ft 11 in.) when performing the FT4 Vertical Flame Test.

(4) Alternative General-Purpose Cable.
Alternative general-purpose optical fiber cable shall be listed as suitable for general-purpose use, with the exception of risers and plenums, and shall also be resistant to the spread of fire.
Informational Note: See CSA C22.2 No. 0.3-M-2001, *Test Methods for Electrical Wires and Cables*, for the CSA vertical flame test — cables in cable trays, that can also be used to define resistance to the spread of fire when the damage (char length) does not exceed 1.5 m (4 ft 11 in.).

(5) Limited-Use Cable.
Limited-use cable shall be listed as suitable for use in dwellings and raceways and shall be listed as resistant to flame spread.
Informational Note: See ANSI/UL 2556, *Standard for Wire and Cable Test Methods,* for one method of determining that cable is resistant to flame spread by testing the cable to the FV-2/VW-1 test.

(6) Type PLTC.
Type PLTC nonmetallic-sheathed, power-limited tray cable shall be listed as being suitable for cable trays, resistant to the spread of fire, and sunlight- and moisture-resistant. Type PLTC cable used in a wet location shall be listed for use in wet locations and marked "wet" or "wet location."
Informational Note: See ANSI/UL 1685-2010, *Standard for Safety for Vertical-Tray Fire-Propagation and Smoke-Release Test for Electrical and Optical-Fiber Cables*, for the UL flame exposure, vertical tray flame test that is used to determine resistance to the spread of fire when cables do not spread fire to the top of the tray. The smoke measurements in the test method are not applicable.
See CSA C22.2 No. 0.3-M-2001, *Test Methods for Electrical Wires and Cables*, for the CSA vertical flame test — cables in cable trays that can also be used to define resistance to the spread of fire when the damage (char length) does not exceed 1.5 m (4 ft 11 in.).

(7) Circuit Integrity (CI) Cable, Fire-Resistive Cable System, or Electrical Circuit Protective System.
Cables that are used for survivability of critical circuits under fire conditions shall comply with either 722.179(A)(7)(a), (A)(7)(b), or (A)(7)(c).
Informational Note: See *NFPA 72*, *National Fire Alarm and Signaling Code*, 12.4.3 and 12.4.4, for additional information on fire alarm CI cable, fire-resistive cable systems, or electrical circuit protective systems used for fire alarm circuits to comply with the survivability requirements to maintain the circuit's electrical function during fire conditions for a defined period of time.

(a) *CI Cables*. CI cables of the types specified in 722.179(A)(1), (A)(2), (A)(3), (A)(4), and (A)(6) and used for survivability of critical circuits shall be marked with the additional classification using the suffix "CI." To maintain its listed fire-resistive rating, CI cable shall only be installed in free air in accordance with 722.24(C). CI cables shall only be permitted to be installed in a raceway where specifically listed and marked as part of a fire-resistive cable system as covered in 722.179(A)(7)(b).

Informational Note: See UL 2196, *Fire Test for Circuit Integrity of Fire-Resistive Power, Instrumentation, Control and Data Cables,*and UL 1425, *Cables for Non–Power-Limited Fire-Alarm Circuits*, for information on establishing a rating for CI cable. The *UL Guide Information for Nonpower-limited Fire Alarm Circuits* (HNHT) contains information to identify the cable and its installation limitations to maintain the fire-resistive rating.

(b) *Fire-Resistive Cables*. Fire-resistive cables of the types specified in 722.179(A)(1), (A)(2), (A)(3), (A)(4), (A)(6), and (A)(7)(a) that are part of a fire-resistive cable system shall be identified with the system identifier and hourly rating marked on the protectant or the smallest unit container and installed in accordance with the listing of the system.

Informational Note: See UL 2196, *Fire Test for Circuit Integrity of Fire-Resistive Power, Instrumentation, Control and Data Cables*, for information on establishing a rating for a fire-resistive cable system. The *UL Guide Information for Electrical Circuit Integrity Systems* (FHIT) contains information to identify the system and its installation limitations to maintain a minimum fire-resistive rating.

(c) *Electrical Circuit Protective System*. Protectants for cables of the types specified in 722.179(A)(1), (A)(2), (A)(3), (A)(4), and (A)(6) that are part of an electrical circuit protective system shall be identified with the protective system identifier and hourly rating marked on the protectant or the smallest unit container and installed in accordance with the listing of the protective system.

Informational Note: See UL 1724, *Fire Tests for Electrical Circuit Protective Systems,* for information on establishing a rating for an electrical circuit protective system. The *UL Guide Information for Electrical Circuit Integrity Systems* (FHIT) contains information to identify the system and its installation limitations to maintain the fire-resistive rating.

(8) Class 3 Single Conductors.
Class 3 single conductors used as other wiring within buildings shall be listed Type CL3 and shall not be smaller than 18 AWG.

Important Notice: This document has been provided in Microsoft Word format for the purpose of NEC® Code-Making Panel Task Group work. This document is the property of the National Fire Protection Association (NFPA), and may not be used for any other purpose or distributed to any other persons or parties outside of the NEC® Code-Making Panels.

Informational Note: See ANSI/UL 1685-2010, *Standard for Safety for Vertical-Tray Fire-Propagation and Smoke-Release Test for Electrical and Optical-Fiber Cables*, for the UL flame exposure, vertical tray flame test that is used to determine resistance to the spread of fire when cables do not spread fire to the top of the tray. The smoke measurements in the test method are not applicable.
See CSA C22.2 No. 0.3-M-2001, *Test Methods for Electrical Wires and Cables*, for the CSA vertical flame test — cables in cable trays that can also be used to define resistance to the spread of fire when the damage (char length) does not exceed 1.5 m (4 ft 11 in.).

(9) Limited Power (LP) Cable.
Class 2 and Class 3 LP cables shall be listed as suitable for carrying power and data up to a specified current limit for each conductor without exceeding the temperature rating of the cable. The cables shall be marked with the suffix "-LP (XXA)" where XXA designates the current limit in amperes per conductor.
Informational Note: An example of the marking on 23 AWG, 4-pair, Class 2 cable rated 75°C with an LP current rating of 0.6 amperes per conductor is "CL2-LP (0.6A) 75°C 23 AWG 4-pair."

(10) Undercarpet Cables.
Undercarpet cable shall be listed as suitable for use under carpet, floor covering, modular tiles, and planks.
Informational Note: See UL 444, *Standard for Safety for Communications Cables*, for the compressive loading test used to determine the suitability of cable for undercarpet use.

(11) Wet Locations.
Cable used in a wet location shall be listed for use in wet locations and be marked "wet" or "wet location" or have a moisture-impervious metal sheath.

(12) Field-Assembled Optical Fiber Cables.
Field-assembled optical fiber cable shall comply with 722.179(A)(12)(a) through (d).

(a) The specific combination of jacket and optical fibers intended to be installed as a field-assembled optical fiber cable shall be one of the types in 722.179(A)(1), (A)(2), or (A)(3) and shall be marked in accordance with Table 179(B).

(b) The jacket of a field-assembled optical fiber cable shall have a surface marking indicating the specific optical fibers with which it is identified for use.

(c) The optical fibers shall have a permanent marking, such as a marker tape, indicating the jacket with which they are identified for use.

(d) The jacket without fibers shall meet the listing requirements for communications raceways in 800.182(A), (B), or (C) in accordance with the cable marking.

(13) Cables Containing Optical Fibers.
Composite optical fiber cables shall be listed as electrical cables based on the type of electrical conductors.

(14) Class 2 and Class 3 Cable Voltage and Temperature Ratings.
Class 2 cables shall have a voltage rating of not less than 150 volts. Class 3 cables shall have a voltage rating of not less than 300 volts. Class 2 and Class 3 cables shall have a temperature rating of not less than 60°C (140°F).

(15) Power-Limited Fire Alarm (PLFA) Cables.
PLFA cables shall comply with 722.179(A)(15)(a) through (A)(15)(d).

(a) Conductors for cables, other than coaxial cables, shall be solid or stranded copper. Coaxial cables shall be permitted to use 30 percent conductivity copper-covered steel center conductor wire.

(b) The size of conductors in a multiconductor cable shall not be smaller than 26 AWG. Single conductors shall not be smaller than 18 AWG. Conductors of 26 AWG shall be permitted only where spliced with a connector listed as suitable for 26 AWG to 24 AWG or larger conductors that are terminated on equipment or where the 26 AWG conductors are terminated on equipment listed as suitable for 26 AWG conductors.

(c) Cables shall have a voltage rating of not less than 300 volts.

(d) Cables shall have a temperature rating of not less than 60°C (140°F).

(16) Class 4 Cable Construction.

(1) Sizes.
Conductors of sizes not smaller than 24 AWG shall be permitted to be used.

(2) Insulation.
Insulation on conductors shall be rated not less than 450 volts dc.

(3) Voltage Rating.
Cables shall have a voltage rating of not less than 450 volts dc. Voltage ratings shall not be marked on the cables.

(4) Temperature Rating.
Cables shall have a temperature rating of not less than 60°C (140°F).

(5) Cabling.
Cables shall comply with any requirements provided in the listing of the system.

Important Notice: This document has been provided in Microsoft Word format for the purpose of NEC® Code-Making Panel Task Group work. This document is the property of the National Fire Protection Association (NFPA), and may not be used for any other purpose or distributed to any other persons or parties outside of the NEC® Code-Making Panels.

Informational Note: See UL 1400-1-2022, *Outline of Investigation for Fault-Managed Power Distribution Technologies — Part 1: General Requirements*, for information on determining applicable requirements for the listing of Class 4 power systems. Excessive cable lengths can result in higher capacitance which could affect the safety of the circuit.

(B) Marking.

Cables shall be durably marked on the surface in accordance with the following:

(1) The AWG size or circular mil area shall be repeated at intervals not exceeding 610 mm (24 in.).

(2) All other markings shall be repeated at intervals not exceeding 1.0 m (40 in.).

(3) The proper type designation for the type of cable shall be marked in accordance with Table 722.179(B).

(4) The manufacturer's name, trademark, or other distinctive marking by which the organization responsible for the product can be readily identified shall be marked.

(5) The AWG size or circular mil area shall be marked.

Informational Note No. 1: See Chapter 9, Table 8, for conductor area expressed in SI units for conductor sizes specified in AWG or circular mil area.

(6) The temperature rating for a temperature rating exceeding 60°C (140°F) shall be marked.

Informational Note No. 2: A minimum temperature rating of 60°C is assumed for cables not marked with a temperature rating.

(7) Voltage ratings shall not be marked on the cables.

Exception: Voltage markings shall be permitted where the cable has multiple listings and a voltage marking is required for one or more of the listings.

Informational Note No. 3: Voltage markings on cables could be misinterpreted to suggest that the cables may be suitable for Class 1 electric light and power applications.

Informational Note No. 4: Cable types are listed in descending order of fire resistance rating.

(8) Metallic conductor cables containing optical fibers shall be marked with the suffix "-OF"

Table 722.179(B) Cable Type Markings

Cable Type	Cable Marking
Class 4 plenum cable	CL4P
Class 3 plenum cable	CL3P
Class 2 plenum cable	CL2P
Power-limited fire alarm plenum cable	FPLP
Nonconductive optical fiber plenum cable	OFNP
Conductive optical fiber plenum cable	OFCP
Class 4 riser cable	CL4R
Class 3 riser cable	CL3R
Class 2 riser cable	CL2R
Power-limited fire alarm riser cable	FPLR
Nonconductive optical fiber riser cable	OFNR
Conductive optical fiber riser cable	OFCR
Class 4 general-purpose cable	CL4
Class 3 general-purpose cable	CL3
Class 2 general-purpose cable	CL2
Class 4 outdoor only use cable	CL4Z
Power-limited fire alarm cable	FPL
Nonconductive general-purpose optical fiber cable	OFN

Important Notice: This document has been provided in Microsoft Word format for the purpose of NEC® Code-Making Panel Task Group work. This document is the property of the National Fire Protection Association (NFPA), and may not be used for any other purpose or distributed to any other persons or parties outside of the NEC® Code-Making Panels.

Cable Type	Cable Marking
Conductive general-purpose optical fiber cable	OFC
Alternative nonconductive general-purpose optical fiber cable	OFNG
Alternative conductive general-purpose optical fiber cable	OFCG
Class 3 cable — limited use	CL3X
Class 2 cable — limited use	CL2X
Undercarpet cable	CMUC

Note: All types of CL2, CL3, CL4, and FPL cables containing optical fibers are provided with the suffix "-OF."

(C) Optional Markings.

Cables shall be permitted to be surface marked to indicate special characteristics of the cable materials.

Informational Note No. 1: Examples of these characteristics include, but are not limited to, limited smoke, halogen free, low smoke and halogen free, and sunlight resistant.

Informational Note No. 2: Some examples of optional markings are ST1 to indicate limited smoke characteristics. See UL 2556, *Wire and Cable Test Methods*; HF to indicate halogen free. See in UL 2885, *Outline of Investigation for Acid Gas, Acidity and Conductivity of Combusted Materials*; and LSHF to indicate halogen free and low-smoke characteristics. See IEC 61034-2, *Measurement of smoke density of cables burning under defined conditions — Part 2: Test procedure and requirements*.

725

726

760

~~**760.3 Other Articles.**~~

~~Circuits and equipment shall comply with 760.3(A) through (O). Only those sections of Article 300 referenced in this article shall apply to fire alarm systems.~~

Important Notice: This document has been provided in Microsoft Word format for the purpose of NEC® Code-Making Panel Task Group work. This document is the property of the National Fire Protection Association (NFPA), and may not be used for any other purpose or distributed to any other persons or parties outside of the NEC® Code-Making Panels.

770

770.114 Grounding.
Non-current-carrying conductive members of optical fiber cables shall be bonded to a grounded equipment rack or enclosure, or grounded in accordance with the grounding methods specified by 770.100(B) using a conductor specified in 770.100(A).

800

805

810

820

Important Notice: This document has been provided in Microsoft Word format for the purpose of NEC® Code-Making Panel Task Group work. This document is the property of the National Fire Protection Association (NFPA), and may not be used for any other purpose or distributed to any other persons or parties outside of the NEC® Code-Making Panels.

830

840

Table 722.xxx (a) ~~800.154(a)~~ Applications of Listed Low Energy ~~Communications~~ Wires, Cables, ~~and Network-Powered Broadband Communications System Cables~~, Listed Optical Fiber Cables in Buildings

Applications		Wire and Cable Type																		
		Limited Energy Circuits~~Communications Systems~~										Listed Optical Fiber			~~Limited Energy and Fault Managed Circuits~~					
		Plenum	Riser	BMR	General-Purpose	~~BM~~	Limited-Use	Undercarpet	~~BMU, BLU~~	Hybrid Power and Communications Cables	Communications Wires	OFNP, OFCP OFCG,	OFNR, OFCR	OFNG, OFN OFC	Plenum	Riser	General Purpose	Limited Use	Under Carpet	PLTC
In ducts specifically fabricated for environmental air as described in 300.22(B)	In fabricated ducts	Y	N	N	N	N	N	N	N	N	N	Y*	N	N	Y[2]	N	N	N	N	N
	In metal raceway that complies with 300.22(B)	Y	Y	Y	Y	Y	Y	N	N	N	Y	Y*	Y*	Y*	Y	Y	Y	Y	N	Y
In other spaces used for environmental air (plenums) as described in 300.22(C)	In other spaces used for environmental air	Y	N	N	N	N	N	N	N	N	N	Y*	N	N	Y	N	N	N	N	N
	In metal raceway that complies with 300.22(C)	Y	Y	Y	Y	Y	Y	N	N	N	Y	Y*	Y*	Y*	Y	Y	Y	Y	N	Y
	In plenum communications raceways	Y	N	N	N	N	N	N	N	N	N	Y*	N	N	Y	N	N	N	N	N
	In plenum cable routing assemblies	Y	N	N	N	N	N	N	N	N	N	Y*	N	N	Y	N	N	N	N	N
	Supported by open metal cable trays	Y	N	N	N	N	N	N	N	N	N	Y*	N	N	Y	N	N	N	N	N
	Supported by solid bottom metal cable trays with solid metal covers	Y	Y	Y	Y	Y	Y	N	N	N	N	Y*	Y*	Y*	Y	Y	Y	Y	N	Y
In risers **and vertical runs**	In vertical runs	Y	Y	Y	N	N	N	N	N	N	N	Y*	Y*	N	Y	Y	N	N	N	N
	In metal raceways	Y	Y	Y	Y	Y	Y	N	N	N	N	Y*	Y*	Y*	Y	Y	Y	Y	N	Y
	In fireproof shafts	Y	Y	Y	Y	Y	Y	N	N	N	N	Y*	Y*	Y*	Y	Y	Y	N	N	Y
	In plenum communications raceways	Y	Y	N	N	N	N	N	N	N	N	Y*	Y*	N	Y	Y	N	N	N	N

Applications		Wire and Cable Type																	
		Limited Energy Circuits~~Communications Systems~~										Listed Optical Fiber			~~Limited Energy and Fault Managed Circuits~~				
		Plenum	Riser	BMR	General-Purpose	~~BM~~	Limited-Use	Undercarpet	~~BMU, BLU~~	Hybrid Power and Communications Cables	Communications Wires	OFNP, OFCP OFCG,	OFNR, OFCR	OFNG, OFN OFC	Plenum	Riser	General Purpose	Limited Use	Under Carpet	PLTC
	In plenum cable routing assemblies	Y	Y	N	N	N	N	N	N	N	N	Y*	Y*	N	Y	Y	N	N	N	N
	In riser communications raceways	Y	Y	N	N	N	N	N	N	N	N	Y*	Y*	N	Y	Y	N	N	N	N
	In riser cable routing assemblies	Y	Y	N	N	N	N	N	N	N	N	Y*	Y*	N	Y	Y	N	N	N	N
	In one- and two-family dwellings	Y	Y	Y	Y	Y	Y	N	N	Y	N	Y*	Y*	Y*	Y	Y	Y	Y[3]	N	Y
Within buildings in other than air-handling spaces and risers	General	Y	Y	Y	Y	Y	Y	N	N	N	N	Y*	Y*	Y*	N/A	N/A	N/A	N/A	N/A	N/A
	In one- and two-family dwellings	Y	Y	Y	Y	Y	Y	Y	N	Y	N	N/A	N/A	N/A	N/A	N/A	N/A	N/A	N/A	N/A
	In multifamily dwellings	Y	Y	Y	Y	Y	Y	Y	N	N	N	N/A	N/A	N/A	N/A	N/A	N/A	N/A	N/A	N/A
	In nonconcealed spaces	Y	Y	Y	Y	Y	Y	Y	N	N	N	N/A	N/A	N/A	N/A	N/A	N/A	N/A	N/A	N/A
	Supported by cable trays	Y	Y	Y	Y	Y	N	N	N	N	N	Y*	Y*	Y*	N/A	N/A	N/A	N/A	N/A	N/A
	Under carpet, modular flooring, and planks	N	N	N	N	N	N	Y	N	N	N	N/A	N/A	N/A	N/A	N/A	N/A	N/A	N/A	N/A
	In distributing frames and cross-connect arrays	Y	Y	N	Y	N	N	N	N	N	Y	Y*	Y*	Y*	N/A	N/A	N/A	N/A	N/A	N/A
	In rigid metal conduit (RMC) and intermediate metal conduit (IMC)	Y	Y	Y	Y	Y	Y	Y	Y	Y	Y	N/A	N/A	N/A	N/A	N/A	N/A	N/A	N/A	N/A

Applications		Wire and Cable Type																	
		Limited Energy Circuits~~Communications Systems~~										Listed Optical Fiber			~~Limited Energy and Fault Managed Circuits~~				
		Plenum	Riser	BMR	General-Purpose	~~BM~~	Limited-Use	Undercarpet	~~BMU, BLU~~	Hybrid Power and Communications Cables	Communications Wires	OFNP, OFCP OFCG,	OFNR, OFCR	OFNG, OFN OFC	Plenum	Riser	General Purpose	Limited Use	Under Carpet	PLTC
	In any raceway recognized in Chapter 3	Y	Y	Y	Y	Y	Y	N	N	N	Y	Y*	Y*	Y*	N/A	N/A	N/A	N/A	N/A	N/A
	In plenum communications raceways	Y	Y	N	Y	N	N	N	N	N	Y	Y*	Y*	Y*	N/A	N/A	N/A	N/A	N/A	N/A
	In plenum cable routing assemblies	Y	Y	N	Y	N	N	N	N	N	Y	Y*	Y*	Y*	N/A	N/A	N/A	N/A	N/A	N/A
	In riser communications raceways	Y	Y	N	Y	N	N	N	N	N	Y	Y*	Y*	Y*	N/A	N/A	N/A	N/A	N/A	N/A
	In riser cable routing assemblies	Y	Y	N	Y	N	N	N	N	N	Y	Y*	Y*	Y*	N/A	N/A	N/A	N/A	N/A	N/A
	In general-purpose communications raceways	Y	Y	N	Y	N	N	N	N	N	Y	Y*	Y*	Y*	N/A	N/A	N/A	N/A	N/A	N/A
	In general-purpose cable routing assemblies	Y	Y	N	Y	N	N	N	N	N	Y	Y*	Y*	Y*	N/A	N/A	N/A	N/A	N/A	N/A
Cables and innerducts installed in metal raceways in a rister having firestops at each floor[2]	**Cables**	N/A	N/A	N/A	N/A	N/A	N/A	N/A	N/A	N/A	N/A	N/A	N/A	N/A	Y	Y	Y	Y	N	Y
	Cables in plenum communications raceways (innerduct)	N/A	N/A	N/A	N/A	N/A	N/A	N/A	N/A	N/A	N/A	N/A	N/A	N/A	Y	Y	Y	Y	N	Y
	Cables in riser communications raceways (innerduct)	N/A	N/A	N/A	N/A	N/A	N/A	N/A	N/A	N/A	N/A	N/A	N/A	N/A	Y	Y	Y	Y	N	Y

Applications		Wire and Cable Type																	
		Limited Energy Circuits~~Communications Systems~~										Listed Optical Fiber			~~Limited Energy and Fault Managed Circuits~~				
		Plenum	Riser	BMR	General-Purpose	~~BM~~	Limited-Use	Undercarpet	~~BMU, BLU~~	Hybrid Power and Communications Cables	Communications Wires	OFNP, OFCP OFCG,	OFNR, OFCR	OFNG, OFN OFC	Plenum	Riser	General Purpose	Limited Use	Under Carpet	PLTC
	Cables in general-purpose communications raceways (innerduct)	N/A	N/A	N/A	N/A	N/A	N/A	N/A	N/A	N/A	N/A	N/A	N/A	N/A	Y	Y	Y	Y	N	Y
In fireproof riser shafts having firestops at each floor[2]	Cables	N/A	N/A	N/A	N/A	N/A	N/A	N/A	N/A	N/A	N/A	N/A	N/A	N/A	Y	Y	Y	N	N	Y
	Cables in plenum communications raceways or plenum cable routing assemblies	N/A	N/A	N/A	N/A	N/A	N/A	N/A	N/A	N/A	N/A	N/A	N/A	N/A	Y	Y	Y	N	N	Y
	Cables in riser communications raceways or riser cable routing assemblies	N/A	N/A	N/A	N/A	N/A	N/A	N/A	N/A	N/A	N/A	N/A	N/A	N/A	Y	Y	Y	N	N	Y
	Cables in general-purpose communications raceways or general-purpose cable routing assemblies	N/A	N/A	N/A	N/A	N/A	N/A	N/A	N/A	N/A	N/A	N/A	N/A	N/A	Y	Y	Y	N	N	Y
In Cable Trays	Outdoors	N/A	N/A	N/A	N/A	N/A	N/A	N/A	N/A	N/A	N/A	N/A	N/A	N/A	N	N	N	N	N	Y

Applications		Wire and Cable Type																	
		Limited Energy Circuits~~Communications Systems~~										Listed Optical Fiber			~~Limited Energy and Fault Managed Circuits~~				
		Plenum	Riser	BMR	General-Purpose	~~BM~~	Limited-Use	Undercarpet	~~BMU, BLU~~	Hybrid Power and Communications Cables	Communications Wires	OFNP, OFCP OFCG,	OFNR, OFCR	OFNG, OFN OFC	Plenum	Riser	General Purpose	Limited Use	Under Carpet	PLTC
In cross-connect arrays	Cables, or cables in plenum, riser, or general-purpose communications raceways installed indoors	N/A	N/A	N/A	N/A	N/A	N/A	N/A	N/A	N/A	N/A	N/A	N/A	N/A	Y	Y	Y	N	N	Y
	Cables, and cables in plenum, riser, or general-purpose communications raceways, installed indoors	N/A	N/A	N/A	N/A	N/A	N/A	N/A	N/A	N/A	N/A	N/A	N/A	N/A	Y	Y	Y	N	N	Y
In one-, two-, and multifamily dwellings, and in building locations other than locations covered above	Cables	N/A	N/A	N/A	N/A	N/A	N/A	N/A	N/A	N/A	N/A	N/A	N/A	N/A	Y	Y	Y	Y[3]	N	Y
	Cables in plenum, riser, or general-purpose communications raceways or cable routing assemblies, or raceways recognized in Chapter 3	N/A	N/A	N/A	N/A	N/A	N/A	N/A	N/A	N/A	N/A	N/A	N/A	N/A	Y	Y	Y	Y	N	Y

Applications		Wire and Cable Type																		
		Limited Energy Circuits~~Communications Systems~~										Listed Optical Fiber			~~Limited Energy and Fault Managed Circuits~~					
		Plenum	Riser	BMR	General-Purpose	~~BM~~	Limited-Use	Undercarpet	~~BMU, BLU~~	Hybrid Power and Communications Cables	Communications Wires	OFNP, OFCP OFCG,	OFNR, OFCR	OFNG, OFN OFC	Plenum	Riser	General Purpose	Limited Use	Under Carpet	PLTC
	Cables in nonconcealed spaces	N/A	N/A	N/A	N/A	N/A	N/A	N/A	N/A	N/A	N/A	N/A	N/A	N/A	Y	Y	Y	Y[4]	N	Y
	Under carpet, floor covering, modular flooring, and planks	N/A	N/A	N/A	N/A	N/A	N/A	N/A	N/A	N/A	N/A	N/A	N/A	N/A	N	N	N	N	Y	N

Note: An "N" in the table indicates that the cable type shall not be installed in the application. A "Y" indicates that the cable type shall be permitted to be installed in the application subject to the limitations described in **770.110 and 770.113 for Optical Fiber Cables (may need to change this to a 722 clause) and** ~~800.113~~**(722.xxx) for Communications Systems**. The Riser column includes all riser cables except BMR, and the General-Purpose column includes all general-purpose cables except BM.

Informational Note No. 1: Part IV of ~~Article 800~~ **(reference Clause in 722?)** covers installation methods within buildings. This table covers the applications of listed communications wires, cables, and raceways in buildings.

Informational Note No. 2: For information on the restrictions to the installation of communications cables in fabricated ducts, see ~~800.113(B).~~ **722.xxx**

~~Informational Note No. 1: Part V of Article 770 covers installation methods within buildings. This table covers the applications of listed optical fiber cables in buildings. The definition of *Point of Entrance* is in 770.2.~~ **(propose deleting this)**

~~Informational Note No. 2: For information on the restrictions to the installation of optical fiber cables in ducts specifically fabricated for environmental air, see 770.113(B).~~ **(propose deleting this)**

For Limited Energy and Fault Managed Circuits, [1]"N" indicates that the cable type shall not be installed in the application. "Y" indicates that the cable type shall be permitted to be installed in the application, subject to any limitations described in this article or the articles described in 722.3(O).

For Limited Energy and Fault Managed Circuits, [2]In 300.22(B), cables shall be permitted in ducts specifically fabricated for environmental air only if directly associated with the air distribution system.

For Limited Energy and Fault Managed Circuits, [3]Limited-use cable shall be permitted to be installed only in one-, two-, and multifamily dwellings and only if the cable is smaller in diameter than 6.35 mm (0.25 in.).

For Limited Energy and Fault Managed Circuits, [4]The exposed length of cable shall not exceed 3.05 m (10 ft).

Informational Note No. ~~1~~**3**: See NFPA 90A-2021, *Standard for the Installation of Air-Conditioning and Ventilating Systems*, 4.3.4 and 4.3.11.3.3, for information on fire protection of wiring installed in ducts specifically fabricated for environmental air and other spaces used for environmental air (plenums).

Informational Note No. ~~2~~**4**: See 300.21 for firestop requirements for floor penetrations.

Informational Note No. ~~3~~**5**: See Chapter 3 for the installation requirements for PLTC cables installed outdoors in cable trays.

Informational Note No. ~~4~~**6**: See UL 2024, *Cable Routing Assemblies and Communications Raceways*, for applicable requirements for plenum, riser, and general-purpose cable routing assemblies and raceways.

Table 722.xxx~~800.154~~(b) Applications of Listed Communications Raceways in Buildings

Applications		Listed Communications Raceway Type		
		Plenum	Riser	General-Purpose
In ducts specifically fabricated for environmental air as described in 300.22(B)	In fabricated ducts	N	N	N
	In metal raceway that complies with 300.22(B)	N	N	N
In other spaces used for environmental air (plenums) as described in 300.22(C)	In other spaces used for environmental air	Y	N	N
	In metal raceway that complies with 300.22(C)	Y	Y	Y
	In plenum cable routing assemblies	N	N	N
	Supported by open metal cable trays	Y	N	N
	Supported by solid bottom metal cable trays with solid metal covers	Y	Y	Y
In risers	In vertical runs	Y	Y	N
	In metal raceways	Y	Y	Y
	In fireproof shafts	Y	Y	Y
	In plenum cable routing assemblies	N	N	N
	In riser cable routing assemblies	N	N	N
	In one- and two-family dwellings	Y	Y	Y
Within buildings in other than air-handling spaces and risers	General	Y	Y	Y
	In one- and two-family dwellings	Y	Y	Y
	In multifamily dwellings	Y	Y	Y
	In nonconcealed spaces	Y	Y	Y
	Supported by cable trays	Y	Y	Y
	Under carpet, modular flooring, and planks	N	N	N
	In distributing frames and cross-connect arrays	Y	Y	Y
	In any raceway recognized in Chapter 3	Y	Y	Y
	In plenum cable routing assemblies	N	N	N
	In riser cable routing assemblies	N	N	N
	In general-purpose cable routing assemblies	N	N	N

Note: An "N" in the table indicates that the communications raceway type shall not be installed in the application. A "Y" indicates that the communications raceway type shall be permitted to be installed in the application, subject to the limitations described in **722.xxx**~~800.110~~ and **722.xxx**~~800.113~~.

Table 722.xxx ~~800.154~~(c) Applications of Listed Cable Routing Assemblies in Buildings

Applications		Listed Cable Routing Assembly Type		
		Plenum	**Riser**	**General-Purpose**
In ducts specifically fabricated for environmental air as described in 300.22(B)	In fabricated ducts	N	N	N
	In metal raceway that complies with 300.22(B)	N	N	N
In other spaces used for environmental air (plenums) as described in 300.22(C)	In other spaces used for environmental air	Y	N	N
	In metal raceway that complies with 300.22(C)	N	N	N
	In plenum communications raceways	N	N	N
	Supported by open metal cable trays	Y	N	N
	Supported by solid bottom metal cable trays with solid metal covers	N	N	N
In risers	In vertical runs	Y	Y	N
	In metal raceways	N	N	N
	In fireproof shafts	Y	Y	Y
	In plenum communications raceways	N	N	N
	In riser communications raceways	N	N	N
	In one- and two-family dwellings	Y	Y	Y
Within buildings in other than air-handling spaces and risers	General	Y	Y	Y
	In one- and two-family dwellings	Y	Y	Y
	In multifamily dwellings	Y	Y	Y
	In nonconcealed spaces	Y	Y	Y
	Supported by cable trays	Y	Y	Y
	Under carpet, modular flooring, and planks	N	N	N
	In distributing frames and cross-connect arrays	Y	Y	Y
	In any raceway recognized in Chapter 3	N	N	N
	In plenum communications raceways	N	N	N
	In riser communications raceways	N	N	N
	In general-purpose communications raceways	N	N	N

Note: An "N" in the table indicates that the cable routing assembly type shall not be installed in the application. A "Y" indicates that the cable routing assembly type shall be permitted to be installed in the application subject to the limitations described in **722.xxx**~~800.113~~.

Article X90 Overcurrent Protection

X90.1 Scope

This Article covers overcurrent protection requirements for Class 2, Class 3 and Class 4 Circuits.

X90.30 Power Sources for Class 2 and Class 3 Circuits.

(A) Power Source.

The power source for a Class 2 or a Class 3 circuit shall be as follows:

Informational Note No. 1: Informational Note Figure X90.30 illustrates the relationships between Class 2 or Class 3 power sources, their supply, and the Class 2 or Class 3 circuits.

Informational Note No. 2: See Chapter 9, Table 11(A) and Table 11(B), for requirements for listed Class 2 and Class 3 power sources.

(1) A listed Class 2 or Class 3 transformer
(2) A listed Class 2 or Class 3 power supply
(3) Other listed equipment marked to identify the Class 2 or Class 3 power source

Exception No. 1 to (3): Thermocouples shall not require listing as a Class 2 power source.
Exception No. 2 to (3): Limited power circuits of listed equipment where these circuits have energy levels rated at or below the limits established in Chapter 9, Table 11(A) and Table 11(B).

Informational Note No. 3: Examples of other listed equipment are as follows:
(1) A circuit card listed for use as a Class 2 or Class 3 power source where used as part of a listed assembly
(2) A current-limiting impedance, listed for the purpose, or part of a listed product, used in conjunction with a non-power-limited transformer or a stored energy source, for example, storage battery, to limit the output current
(3) A thermocouple
(4) Limited voltage/current or limited impedance secondary communications circuits of listed industrial control equipment

(4) Listed audio/video, information technology (computer), communications, and industrial equipment limited-power circuits

Informational Note No. 4: One way to determine applicable requirements for listing of information technology (computer) equipment is to refer to UL 60950-1-2011, Standard for Safety of Information Technology Equipment. Another way to determine applicable requirements for listing of audio/video, information technology, and communications equipment is to refer to UL 62368-1-2014, Safety of audio/video, information and

communication technology equipment. Typically such circuits are used to interconnect data circuits for the purpose of exchanging information data. One way to determine applicable requirements for listing of industrial equipment is to refer to UL 61010-2-201, Safety requirements for electrical equipment for measurement, control, and laboratory use — Part 2-201: Particular requirements for control equipment, and/or UL 61800-5-1, Adjustable speed electrical power drive systems — Part 5-1: Safety requirements — Electrical, thermal and energy.

(5) A battery source or battery source system that is listed and identified as Class 2

(B) Interconnection of Power Sources.

Class 2 or Class 3 power sources shall not have the output connections paralleled or otherwise interconnected unless listed for such interconnection.

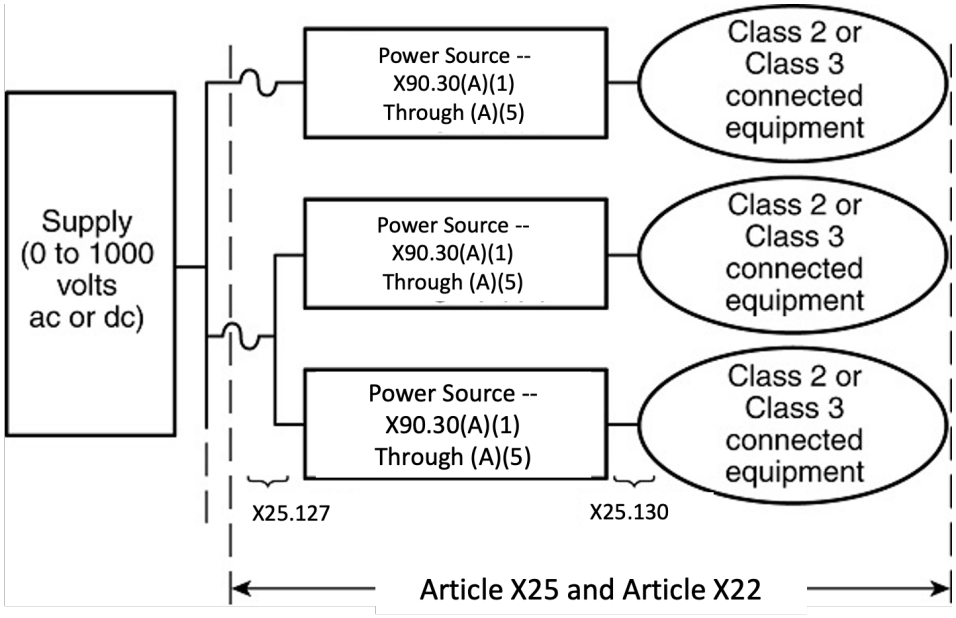

Informational Note Figure X90.30 Class 2 and Class 3 Circuits.

(C) Marking.

The equipment supplying the circuits shall be durably marked where plainly visible to indicate each circuit that is a Class 2 or Class 3 circuit. The power sources for limited power circuits in

X90.30(A)(3), limited power circuits for listed audio/video equipment, listed information technology equipment, listed communications equipment, and listed industrial equipment in X90.30(A)(4) shall have a label indicating the maximum voltage and rated current output per conductor for each connection point on the power source. Where multiple connection points have the same rating, a single label shall be permitted to be used.

Informational Note No. 1: Rated current for power sources covered in X25.144 is the output current per conductor the power source is designed to deliver to an operational load at normal operating conditions, as declared by the manufacturer.

Informational Note No. 2: An example of a label is "52V @ 0.433A, 57V MAX" for an IEEE 802.3 compliant Class 8 power source.

X90.50 Power Sources for Class 4 Circuits.

Class 4 circuits shall be supplied from a power source (transmitter) that has a voltage output of not more than 450 volts peak or dc.

Informational Note No. 1: Informational Note Figure X90.50 illustrates the relationships between Class 4 power transmitters (power sources), Class 4 circuits, Class 4 power receivers, and utilization equipment.

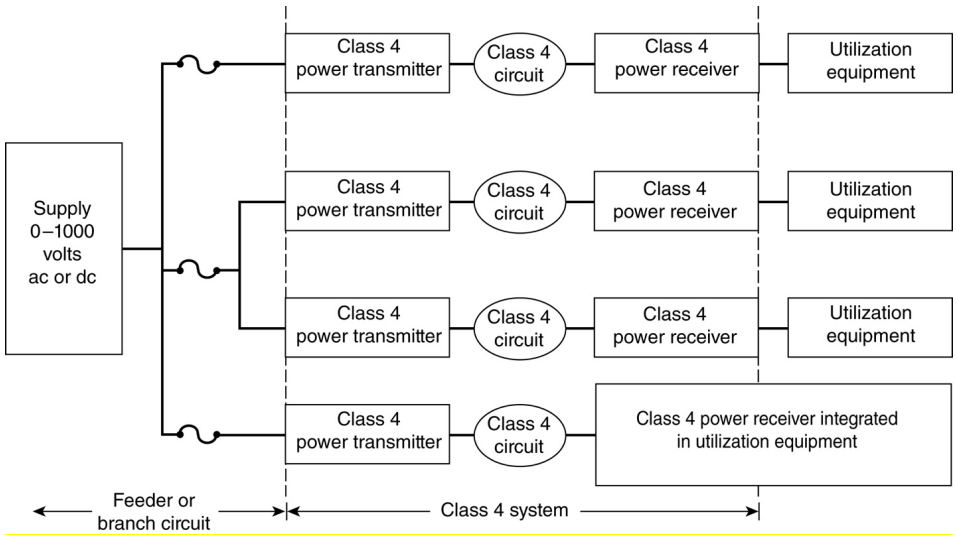

Informational Note Figure X90.50 Class 4 Circuits.

(A) Fault Management.
A transmitter shall interrupt an energized circuit when any of the following conditions occur on the circuit between the transmitter and receiver:

(1) A short circuit
(2) A line-to-line fault condition that presents an unacceptable risk of fire or electric shock
(3) A ground-fault condition that presents an unacceptable risk of fire or electric shock
(4) An overcurrent condition
(5) A malfunction of the monitoring or control system that presents an unacceptable risk of fire or electric shock
(6) Any other condition that presents an unacceptable risk of fire or electric shock

Informational Note: See UL 1400-1-2022, Outline of Investigation for Fault-Managed Power Systems — Part 1: General Requirements, for information on determining applicable requirements for the listing of Class 4 power systems, including safe operation and limiting the risk of fire and electric shock.

Implementation notes for the panel and editorial staff:
X90.30 is 725.60 from the 2023 NEC. There were no FRs in the 725.60 section from PIs.

X90.50 is 726.121 from the 2023 NEC and there were FRs against the text. The text above is the results of these FRs. The legislative text is shown below for completeness and tracking.

726.121 Power Sources for Class 4 Circuits.
~~The power source shall be a listed Class 4 power transmitter or a listed Class 4 power transmitter as part of a transmitter/receiver system and shall provide the protections in accordance with 726.121(A).~~ Class 4 circuits shall be supplied from a power source (transmitter) that has a voltage output of not more than 450 volts peak or dc.
Informational Note No. 1: Informational Note Figure 726.121 illustrates the relationships between Class 4 power transmitters (power sources), Class 4 circuits, Class 4 power receivers, and utilization equipment.
~~Informational Note No. 2: See UL 1400-1, *Outline for Fault-Managed Power Systems — Part 1: General Requirements*, for information on determining applicable requirements for the listing of Class 4 power systems.~~

Figure Informational Note Figure 726.121 Class 4 Circuits.

(A) Fault Management.
~~For listing purposes, a~~A transmitter shall interrupt an energized circuit when any of the following conditions occur on the circuit between the transmitter and receiver:

(1) A short circuit

(2) A line-to-line fault condition that presents an unacceptable risk of fire or electric shock

(3) A ground-fault condition that presents an unacceptable risk of fire or electric shock

(4) An overcurrent condition

(5) A malfunction of the monitoring or control system that presents an unacceptable risk of fire or electric shock

(6) Any other condition that presents an unacceptable risk of fire or electric shock

Informational Note: See UL 1400-1-2022, *Outline of Investigation for Fault-Managed Power Systems — Part 1: General Requirements*, for information on determining applicable requirements for the listing of Class 4 power systems, including safe operation and limiting the risk of fire and electric shock.

Commented [CJ(1]: FR TG2-61

Commented [CJ(2]: FR TG2-68

Commented [CJ(3]: FR TG2-67

Founded to sell watches; evolved to sell everything	Founded to sell books; evolved to sell everything
1972	2017
sears	amazon
2 of every 3 Americans shopped in last 3 months	2 of every 3 Americans shopped in last 3 months
1987 Sales = 1% of GDP	2017 Sales = 1% of GDP

Merriam Associates

Source: Chicago Tribune

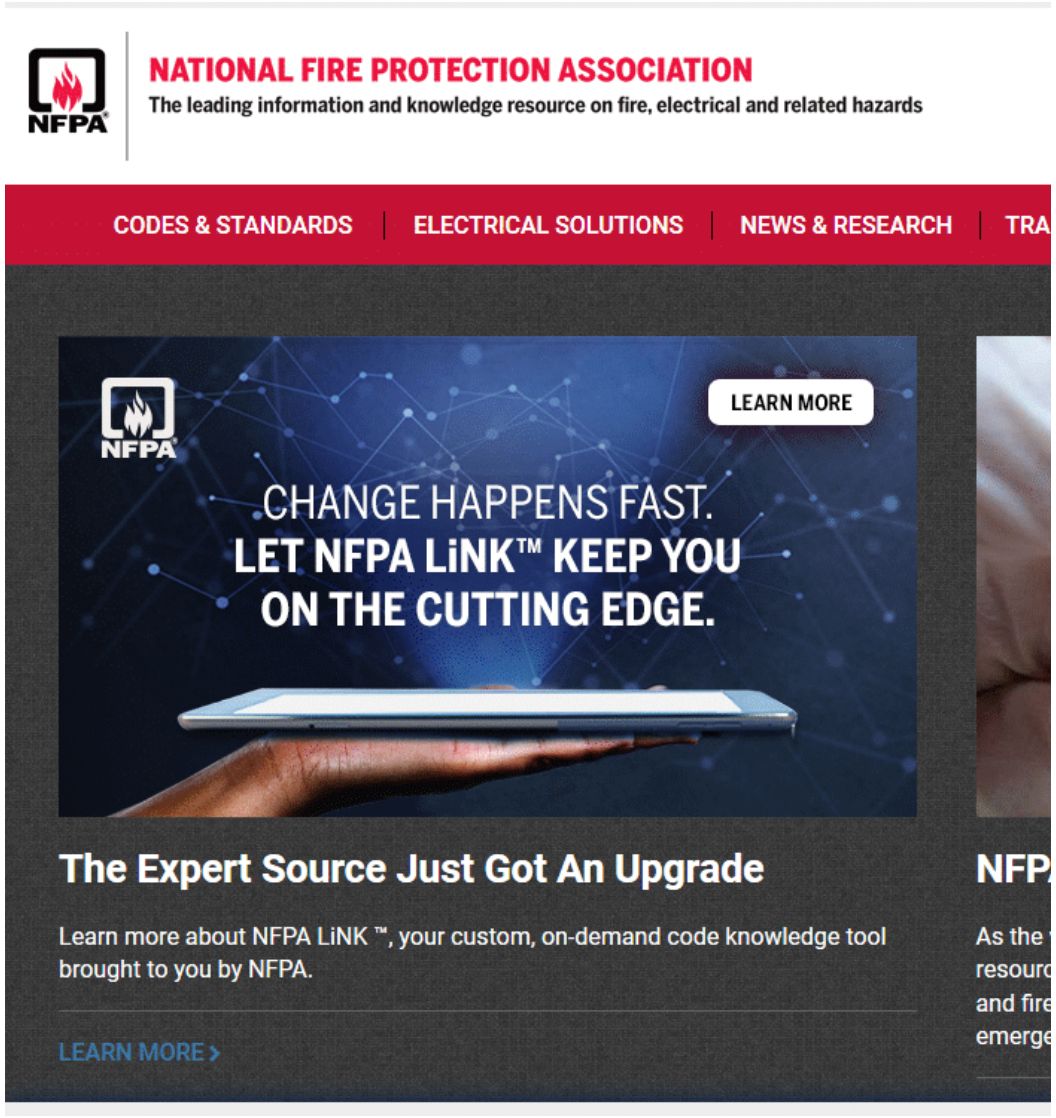

March 2020

Chapter 1

General

Chapter 2

Wiring & Protection

Chapter 3

Wiring Methods & Materials

Chapter 4

Equipment for General Use

Chapter 5

Special Occupancies

Chapter 6

Special Equipment

Chapter 7

Special Conditions

Chapter 8

Communications Systems

1937-2023 (35 editions):

Introduction (Identified as Article 90 starting in the 1959 edition)

Chapter 1 – General

Chapter 2 – Wiring Design and Protection

Chapter 4 has grown from 10 articles in the 1937 edition to 22 articles in the 2023 edition

Chapter 5 has grown from 5 articles in the 1937 edition to 27 articles in the 2023 edition

Chapter 6 has grown from 7 articles in the 1937 edition to 27 articles in the 2023 edition

Chapter 7 has grown from 4 articles in the 1937 edition to 15 articles in the 2023 edition

Chapter 8 has grown from 2 articles in the 1937 edition to 6 articles in the 2023 edition

What Else is Coming Down the Pike?

By: MTA Construction and Development

By: Portland General Electric

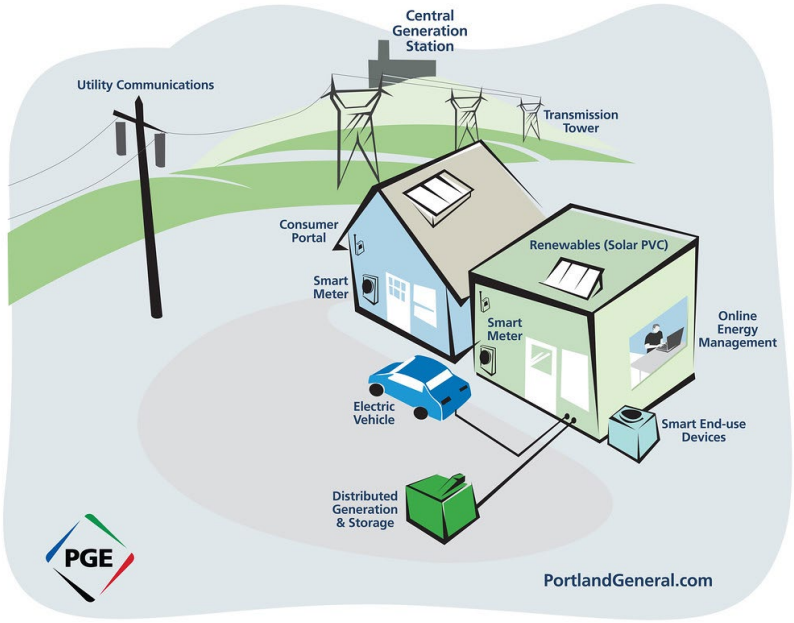

By:National Renewable Labs

Where do we want to go?

- Remain relevant with the quickly evolving electrical industry
- Improve usability
  - Place content where it makes sense
  - Logical/parallel structure
    - Systems below 1000V
    - Limited Energy
    - Medium Voltage
  - Eliminate “Special Equipment”/ “Special Conditions”
  - Leverage the past to make the future even better
- Create a structure that looks to the future

National Electrical Code® Correlating Committee
White Paper

Keeping the NEC® Relevant - Is Now the Time to Modernize?

The National Electrical Code® (NEC®) is the foundation of the electrical installation regulatory infrastructure for the United States, Mexico, and numerous other jurisdictions around the world. Growing demand for safe, reliable, resilient, and efficient use of electrical power to support society and the economy is aligning with technological advancement of power generation sources, electrical distribution, and new electrical power loads. It is critical the NEC be revised and implemented by the electrical community every three years to support the accelerating pace of change and technological advancement.

The structure of the NEC plays a critical role for personnel in learning, understanding, applying, and enforcing the requirements established within this regulatory code. While the current structure, first introduced in 1937, has provided tremendous success and stability and continues to be used by engineers, contractors, electricians and training programs, the ability to efficiently learn and quickly apply and inspect advancing technologies and uniquely configured electrical systems is a challenge for all electrical professionals. The existing NEC structure needs modernization to continue to support the advancing electrical infrastructure configurations and technological advancements. Therefore, it is imperative that the electrical industry actively pursue a revised NEC organizational structure to support ease of learning, understanding, and applying the NEC safety provisions in a rapidly advancing new energy landscape.

Keeping the NEC Relevant Now is the Time to Modernize

- Industry Trends
- Medium Voltage
- Limited Energy
- Multi-Directional Power Flow
- Digital Delivery of Content
- Future Vision
- Path Forward
- Feedback

Medium Voltage

A Starting Point for Considering a New Approach

- More difficult for AHJ's when inspecting
- Less likely to have listed equipment since traditionally geared toward utility.
- More likely to have requirements that are antiquated
- Depth of knowledge of Technical Committees can be a challenge.
- Wiring methods in Chapter 3 for >1000 volt systems are difficult to determine
- With renewable energy and microgrids lines of distinction between NESC and NEC are blurred.

Limited Energy

Past

- Confusing
- No more Ma Bell
- Independence Chapter 8 vs Dependence Chapter 1-7
- Cat 5/6 Cable Article 725 and 805
- POE is Article 725 and 840
- How do we maintain relevance?

Future

- Improve usability.
- Improve Terminology
- Create structure that is technology agnostic.
- Eliminate redundancy.
- Parallel Structure
- Everything communicates

Short-Term Goals (2026)

MV /Limited Energy

- Move from Medium voltage structure to Medium Voltage Technical changes
- Work on Limited Energy

Create parallel structure for Limited Energy

- Make it look like the front of the book.
- (Protection scheme, wire and a load)

Begin Implementation

- Move certain articles for long-term road map implementation

Arc fault circuit interrupter

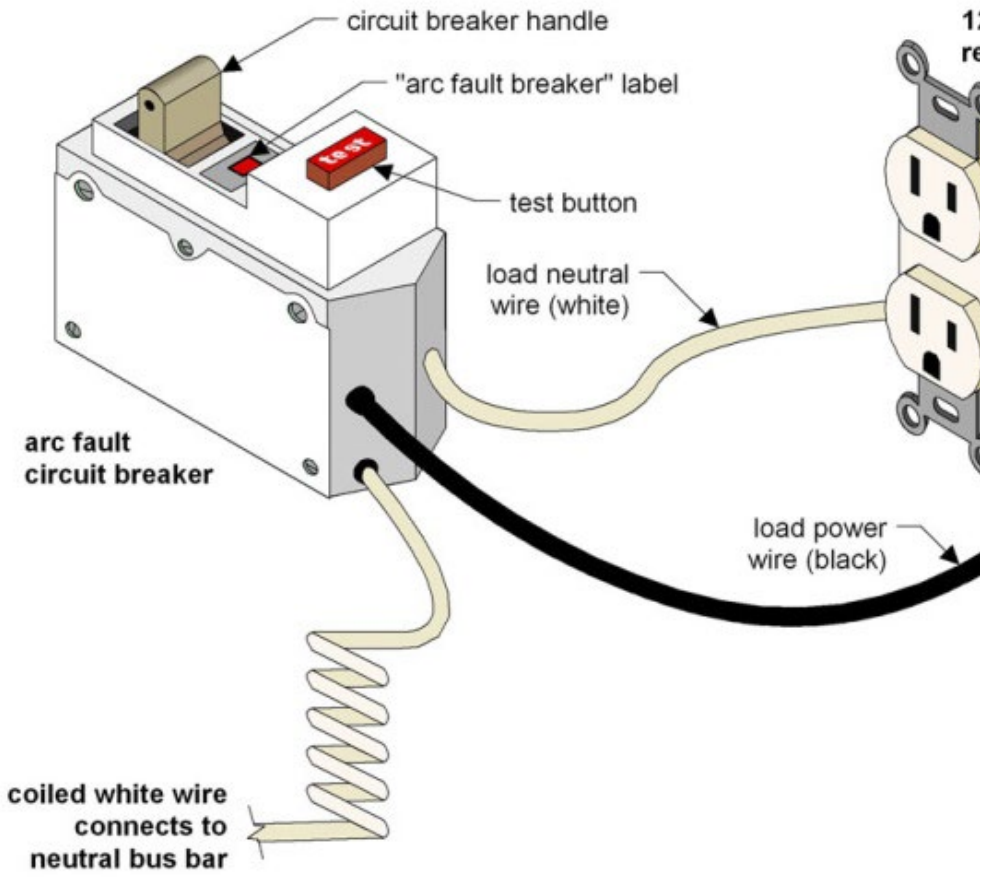

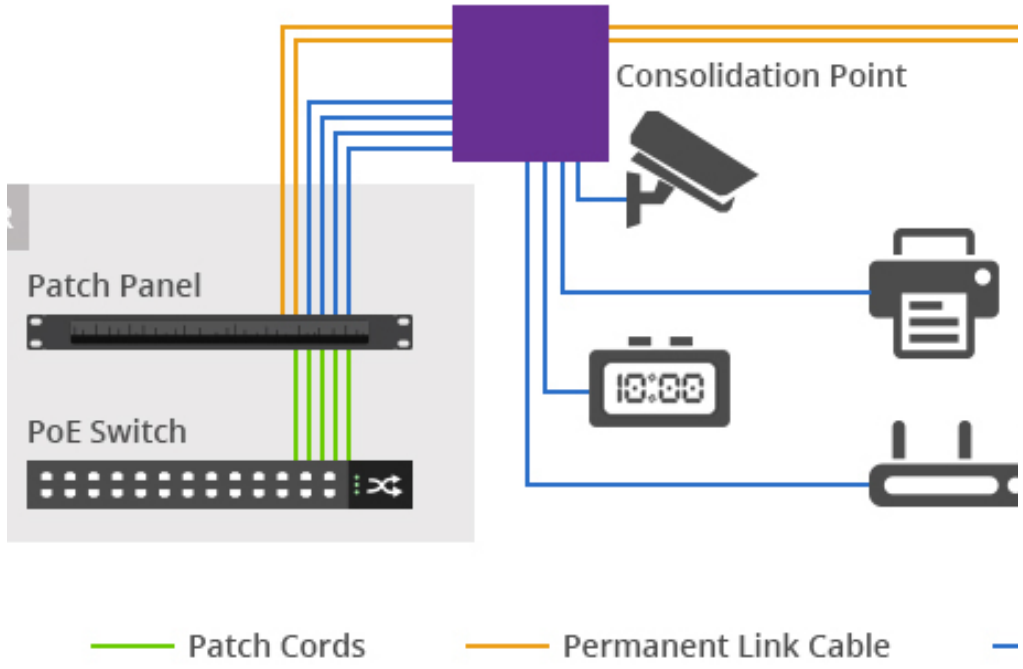

90.3 –2023 NEC

Introduction

Definitions and General Requirements
Chapter 1

Wiring and Protection
Chapter 2

Wiring Methods and Materials
Chapter 3

Equipment for General Wiring
Chapter 4

Special Occupancies
Chapter 5

Special Equipment
Chapter 6

Special Conditions
Chapter 7

Communication Systems
Chapter 8

Tables
Chapter 9

Informative Annex A through Informative Annex K

(Light Blue) Applies generally to electrical installations

(Brown) Supplemental or Amendatory requirements

Applicable as referenced

Informative Only

PROPOSED 90.3 –2029 NEC

Introduction

Definitions and General Requirements
Chapter 1

Wiring and Protection for Systems 1000 VAC, 1500 VDC and Below
Chapter 2

Wiring and Protection for Systems Over 1000 VAC, 1500 VDC
Chapter 3

Wiring and Protection for Limited Energy Systems
Chapter 4

Wiring Methods and Materials
Chapters 5 - 10

Equipment
Chapter 11 - 14

Specific Locations and Occupancies
Chapters 15 – 17

Energy Sources
Chapters 18

Life Safety and Emergency Systems
Chapter 19

Tables
Chapter 20

Informative Annex A through Informative Annex K

Title		2023 Reference	2026 CMP	2029 CMP
90	Introduction	90	1	1
Chapter 1 Definitions and General Requirements				
100	Definitions	100	1	1
110	Requirements for Electrical Installations	110	1	1
120	Load Calculations	220	2	2
130	Energy Management Systems	750	13	13
140	Temporary Installations	590	3	3
Chapter 2 Wiring and Protection for Systems 1000 VAC, 1500 VDC and Below				
200	General Requirements	300	3	3
205	Conductors	310	6	6
206	Use and Identification of Grounded Conductors	200	5	5
210	Branch Circuits	210	2	2
215	Feeders	215	10	10
225	Outside Branch Circuits and Feeders	225	10	10
230	Services	230	10	10
240	Overcurrent Protection	240	10	10
242	Overvoltage Protection (Part I and II)	242	10	10
250	Grounding and Bonding	250	5	5

3

Chapter 3 Wiring and Protection for Systems Over 1000 VAC, 1500 VDC				
300	General Requirements	305	9	9
305	Conductors and Cables	315	9	9
306	Use and Identification of Grounded Conductors	205	5	9
310	Branch Circuits	235	9	9
315	Feeders	235	9	9
325	Outside Branch Circuits and Feeders	235	9	9
330	Services	235	9	9
342	Overvoltage Protection	242 (Part III)	10	9
350	Grounding and Bonding	250 (Part X)	5	5

4

Chapter 4 Wiring and Protection for Limited Energy Systems				
400	Wiring Requirements and Materials		3	3
405	Conductors and Cables (Including Listing and Flammability)	722	3	3
406	Use and Identification of Conductors		3	3
430	Interior Cabling Systems Part I- Class 1 Power-Limited Circuits Part II- Class 2 and Class 3 Part III- Class 4	724, 725, 726	3	3
435	Exterior Cabling Systems (Outside Plant) Part I- Communication Circuits Part II- Antenna Systems Part III- CATV Part IV- Networked-Powered Broadband Communication Systems Part V- Premises-Powered Broadband Communication Systems		16	16
440	Overcurrent Protection Part I- Class 1 Power-Limited Circuits Part II- Class 2 and Class 3 Part III- Class 4	724, 725, 726	3	3
442	Overvoltage Protection		3	3
450	Grounding and Bonding		16	5

5, 6

Chapter 5 Enclosures and Wiring Support Structures				
500	Cabinets, Cutout Boxes, and Meter Socket Enclosures	312	8	8
502	Outlet, Device, Pull, and Junction Boxes; Conduit Bodies; Fittings; and Handhole Enclosures	314	8	8
504	Cable Trays	392	8	8
506	Auxiliary Gutters	366	8	8
508	Metal Wireways	376	8	8
510	Nonmetallic Wireways	378	8	8
512	Nonmetallic Extensions	382	6	8
Chapter 6 Wire and Cable				
600	Armored Cable: Type AC	320	6	6
602	Flat Cable Assemblies: Type FC	322	6	6
604	Flat Conductor Cable: Type FCC	324	6	6
606	Integrated Gas Spacer Cable: Type IGS	326	6	6
608	Metal-Clad Cable: Type MC	330	6	6
610	Mineral-Insulated, Metal-Sheathed Cable: Type MI	332	6	6
612	Nonmetallic-Sheathed Cable: Types NM and NMC	334	6	6
614	Optical Fiber Cables	770	16	16
616	Instrumentation Tray Cable: Type ITC	335	6	6
618	Power and Control Tray Cable: Type TC	336	6	6
620	Type P Cable	337	6	6
622	Service-Entrance Cable: Types SE and USE	338	6	6
624	Underground Feeder and Branch-Circuit Cable: Type UF	340	6	6
626	Flexible Cords and Flexible Cables	400	6	6
628	Fixture Wires	402	6	6

7, 8

Chapter 7 Circular Raceways (Conduit and Tubing)				
700	Intermediate Metal Conduit: Type IMC	342	8	8
702	Rigid Metal Conduit: Type RMC	344	8	8
704	Flexible Metal Conduit: Type FMC	348	8	8
706	Liquidtight Flexible Metal Conduit: Type LFMC	350	8	8
708	Rigid Polyvinyl Chloride Conduit: Type PVC	352	8	8
710	High Density Polyethylene Conduit: Type HDPE Conduit	353	8	8
712	Nonmetallic Underground Conduit with Conductors: Type NUCC	354	8	8
714	Reinforced Thermosetting Resin Conduit: Type RTRC	355	8	8
716	Liquidtight Flexible Nonmetallic Conduit: Type LFNC	356	8	8
718	Electrical Metallic Tubing: Type EMT	358	8	8
720	Flexible Metallic Tubing: Type FMT	360	8	8
722	Electrical Nonmetallic Tubing: Type ENT	362	8	8
724	Raceways for Limited Energy Systems (Communication Raceways)	800, 805, 810, 820, 830, 840	16	16
Chapter 8 Non-Circular Raceways				
800	Cellular Concrete Floor Raceways	372	8	8
802	Cellular Metal Floor Raceways	374	8	8
804	Strut-Type Channel Raceway	384	8	8
806	Surface Metal Raceways	386	8	8
808	Surface Nonmetallic Raceways	388	8	8
810	Underfloor Raceways	390	8	8

9, 10, 11

Chapter 9 Power and Lighting Systems				
900	Busways	368	8/9	8
902	Cablebus	370	8	8
904	Insulated Bus Pipe (IBP) and Tubular Covered Conductors (TCC) (New)	369	8	8
906	Flexible Bus System (New)	371	8	8
908	Multioutlet Assembly	380	8	8
910	Low-Voltage Suspended Ceiling Power Distribution Systems	393	18	18
912	Manufactured Wiring Systems	604	7	7
916	Office Furnishings	605	18	18
Chapter 10 Open Wiring				
1000	Concealed Knob-and-Tube Wiring	394	6	6
1002	Messenger-Supported Wiring	396	6	6
1004	Open Wiring on Insulators	398	6	6
Chapter 11 Devices				
1100	Switches	404	9/10	10
1102	Wiring Devices	406	18	18
1104	Switchboards, Switchgear and Panelboards	408	10	10
1106	Industrial Control Panels	409	11	11
1108	Transformers and Transformer Vaults	450	9	9
1110	Phase Converters	455	13	13
1112	Capacitors	460	9/11	11
1114	Resistors and Reactors	470	9/11	11

12

Chapter 12 Utilization Equipment				
1200	Luminaires, Lampholders and Lamps	410	18	18
1202	Low-Voltage Lighting	411	18	18
1204	Electric Signs and Outline Lighting	600	18	18
1206	Motors, Motor Circuits, and Controller	430	11	11
1208	Cranes and Hoists	610	12	12
1210	Elevators, Dumbwaiters, Escalators, Moving Walks, Platform Lifts, and Stairway Chairlifts	620	12	12
1212	Electrically Driven or Controlled Irrigation Machines	675	7	7
1214	Appliances	422	17	17
1216	Fixed Electric Space Heating Equipment	424	17	17
1218	Fixed Resistance and Electrode Industrial Process Heating Equipment	425	17	17
1220	Fixed Outdoor Electric Deicing and Snow-Melting Equipment	426	17	17
1222	Fixed Electric Heating Equipment for Pipelines and Vessels	427	17	17
1224	Air-Conditioning and Refrigeration Equipment	440	11	11
1226	Induction and Dielectric Heating Equipment	665	12	12
1228	Electric Welders	630	12	12
1230	Pipe Organs	650	12	12
1232	Information Technology Equipment	645	12	12
1234	Sensitive Electronic Equipment	647	12	12
1236	X-Ray Equipment	660	12	12

13, 14

Chapter 13 Systems (Equipment)				
1300	Electric Vehicle Power Transfer System	625	12	12
1302	Electrified Truck Parking Spaces	626	12	12
1304	Audio Signal Processing, Amplification, and Reproduction Equipment	640	12	12
1306	Modular Data Centers	646	12	12
1308	Electrolytic Cells	668	12	12
1310	Electroplating	669	12	12
1312	Industrial Machinery	670	12	12
1314	Integrated Electrical Systems	685	12	12
Chapter 14 Equipment Over 1000 VAC, 1500 VDC				
1400	General	495 (Part I & II)	9	9
1402	Switchgear and Industrial Control Assemblies	495 (Part III)	9	9
1404	Mobile and Portable Equipment	495 (Part IV)	9	9
1406	Boilers	495 (Part V)	9	9
1408	Motors, Motor Circuits, and Controllers	430 (Part XI)	11	9
1410	Capacitors	460 (Part III)	11	9
1412	Resistors and Reactors	470 (Part III)	11	9

15

Chapter 15 Hazardous Locations				
1500	Hazardous (Classified) Locations, Classes I, II, and III, Divisions 1 and 2	500	14	14
1501	Class I Locations	501	14	14
1502	Class II Locations	502	14	14
1503	Class III Locations	503	14	14
1504	Intrinsically Safe Systems	504	14	14
1505	Zone 0, 1, and 2 Locations	505	14	14
1506	Zone 20, 21, and 22 Locations for Combustible Dusts or Ignitible Fibers/Flyings	506	14	14
1511	Commercial Garages, Repair and Storage	511	14	14
1512	Cannabis Oil Equipment and Cannabis Oil Systems Using Flammable or Combustible Materials	512	14	14
1513	Aircraft Hangars	513	14	14
1514	Motor Fuel Dispensing Facilities	514	14	14
1515	Bulk Storage Plants	515	14	14
1516	Spray Application, Dipping, Coating, and Printing Processes Using Flammable or Combustible Materials	516	14	14

16

Chapter 16 Occupancies				
1600	Health Care Facilities	517	15	15
1602	Assembly Occupancies	518	15	15
1604	Theaters, Audience Areas of Motion Picture and Television Studios, Performance Areas, and Similar Locations	520	15	15
1606	Control Systems for Permanent Amusement Attractions	522	15	15
1608	Carnivals, Circuses, Fairs, and Similar Events	525	15	15
1610	Motion Picture and Television Studios and Similar Locations	530	15	15
1612	Motion Picture Projection Rooms	540	15	15
1614	Manufactured Buildings and Relocatable Structures	545	7	7
1616	Agricultural Buildings	547	7	7
1618	Mobile Homes, Manufactured Homes, and Mobile Home Parks	550	7	7
1620	Recreational Vehicles and Recreational Vehicle Parks	551	7	7
1622	Park Trailers	552	7	7

17, 18, 19,

Chapter 17 Installations Associated with Bodies of Water				
1700	Swimming Pools, Fountains, and Similar Installations	680	17	17
1702	Natural and Artificially Made Bodies of Water	682	7	7
1704	Marinas, Boatyards, Floating Buildings, and Commercial and Noncommercial Docking Facilities	555	7	7
Chapter 18 Power Production and Energy Storage Systems				
1800	Interconnected Systems	705	13	13
1802	Generators	445	13	13
1804	Stationary Standby Batteries	480	13	13
1806	Solar Photovoltaic (PV) Systems	690	4	4
1808	Large-Scale Photovoltaic (PV) Electric Supply Stations	691	4	4
1810	Fuel Cell Systems	692	4	4
1812	Wind Electric Systems	694	4	4
1814	Energy Storage Systems	706	13	13
1816	Stand Alone Systems	710	4	4
1818	Optional Standby Systems	702	13	13
Chapter 19 Life Safety and Emergency Systems				
1900	Emergency Systems	700	13	13
1902	Legally Required Standby Systems	701	13	13
1904	Fire Pumps	695	13	13
1906	Fire Alarm Systems	760	3	3
1908	Circuit Integrity Cables and Electrical Protective Systems (Fire- Resistive Cable Systems)	728	3	3
1910	Critical Operations Power Systems (COPS)	708	13	13

2026 NEC STRUCTURE

Introduction

Definitions and General Requirements
Chapter 1

Wiring and Protection
Chapter 2

Wiring Methods and Materials
Chapter 3

Equipment for General Wiring
Chapter 4

Special Occupancies
Chapter 5

Special Equipment
Chapter 6

Special Conditions
Chapter 7

Communication Systems
Chapter 8

Tables
Chapter 9

Informative Annex A through Informative Annex K

2026 NEC		2023 NEC Reference
Chapter 1 Definitions and General Requirements		
100	Definitions	100
110	Requirements for Electrical Installations	110
120	Load Calculations	220
130	Energy Management Systems	750
140	Temporary Installations	590

Takeaways

- Feedback to Jeff Sargent
- Proposed structure is fluid and will continue to evolve as we receive input
- Intent to print proposed structure in Annex for 2026 NEC edition.
- Structure is not intended to impact technical, only the organization and correlation of the technical content
- Intent is to move articles once

Public Comment No. 1064-NFPA 70-2024 [Global Input]

I want to surpport the Deletion of Section 726.12. This deletion unlocks the use of class 4 (which is a high power communcation equipment and power system) in dwelling units. This can offer a lot of new products which is more efficient and safe.

Statement of Problem and Substantiation for Public Comment

Delete section 726.12. Class 4 system is more efficient and safe, which should be permitted to use in dwelling units.

Related Item

- 726.12

Submitter Information Verification

Submitter Full Name: Ming Li
Organization: SpaceX
Affiliation: Starlink
Street Address:
City:
State:
Zip:

Submittal Date: Tue Aug 13 12:29:37 EDT 2024
Committee: NEC-P03

Public Comment No. 1643-NFPA 70-2024 [Global Input]

This Global Public Comment is for CMP-3 to review the use of the terms "overcurrent", "overcurrent protective devices" and "overcurrent protection".

Additional Proposed Changes

File Name	Description	Approved
CMP-3_OCPD_TG-4_CMP-10.pdf	CMP-3_OCPD_TG-4 CMP-10	
All_CMP_Comments_Files_from_CMP-10_TG-4.pdf	All CMP Comments Files from CMP-10 TG-4	

Statement of Problem and Substantiation for Public Comment

This Public Comment is submitted on behalf of a Task Group formed under the purview of Code Making Panel 10 consisting of Randy Dollar, Thomas Domitrovich, Jason Doty, Diane Lynch, Alan Manche, Nathan Philips, David Williams, and Danish Zia. This Public Comment, along with other Public Comments, was developed with the goal of improving usability and accuracy on requirements associated with overcurrent protective devices.

The Task Group reviewed all instances of the term "overcurrent", "overcurrent protective devices" and "overcurrent protection" and provided recommended changes to align proposed and current defined terms.

For consistency, the task group chose to use the full defined term "overcurrent protective device" in the title of all sections or subdivisions and the acronym "OCPD" or "OCPDs" when used in the body of each code section.

The term overcurrent protection applies to the application of an overcurrent protective device OCPD, to protect conductors and equipment.

Two documents are attached: One for your specific code panel and the other is a comprehensive document illustrating all of the code-wide comments made by this task group.

The current term "Overcurrent Protective Device, Branch-Circuit" is being deleted and the new defined term "Overcurrent Protective Device (OCPD)" will be used instead.

The following are the proposed terms being submitted to CMP-10.

PC 1639 Overcurrent Protection.
Automatic interruption of an overcurrent

PC 1636 Overcurrent Protective Device (OCPD).
A device capable of providing protection over the full range of overcurrent between its rated current and its interrupting rating. (CMP-10)

Informational Note 1: Prior editions of NFPA 70 included the defined term "branch circuit overcurrent protective device" for overcurrent protective devices suitable for providing protection for service, feeder and branch circuits. This term has been revised to a generalized term of "overcurrent protective device" (OCPD). The specific requirements using this term may include modifiers (such as branch OCPD, feeder OCPD, service OCPD) to specify location or application of the OCPD, or to specify variations (such as supplementary OCPD).

Informational Note 2: See 240.7 for a list of overcurrent protective devices suitable for providing protection for service, feeder, branch circuits and equipment.

Related Item

- Global PI 4050
- PC 1636
- PC 1639

Submitter Information Verification

Submitter Full Name: David Williams
Organization: Delta Charter Township
Street Address:
City:
State:
Zip:

Submittal Date: Sun Aug 25 21:38:58 EDT 2024
Committee: NEC-P03

CMP-10 TG-4 Review of Overcurrent Language for the Articles undeer the purview of CMP-3			
CMP	NEC Section (using First Draft of 2026 NEC)	Current Language	"New" Language
3	Article 100		
	Fault Managed Power.	Overcurrent protection	Fine as is
	Fire Alarm Circuit	Overcurrent device	overcurrent protective device (OCPD)
3	Article 300		
	300.5-T	Overcurrent Protection	Fine as is
	300.17(I)	Overcurrent Device	OCPD
	300.28(C)(3). (X5)	Overcurrent Protection	Fine as is
3	Article 590		
	590.6(A)	Overcurrent Protection	Fine as is
	590.6(B)	be protected from Overcurrent	shall be provided with overcurrent protection
	590.9. Title	Overcurrent protective device	Fine as is
	590.9(A)	Overcurrent protective devices	OCPDs
	590.9(B) Title	Service Overcurrent protective devices	Fine as is
	590.9(B)	Overcurrent protective devices	OCPDs
3	Article 721		
	721.50(A)	Overcurrent	Fine as is
3	Article 722		
	722.1	Overcurrent Protection	Fine as is
3	Article 724	Class 1	
	724.40(B). (X3)	Overcurrent Devices	OCPDs
	724.40(B). (X2)	Overcurrent Device	OCPD
	724.40(B). (X2)	Overcurrent Protection	Fine as is
	724.43. (X4)	Overcurrent Protection	Fine as is
	724.45	Overcurrent Device	OCPD
	724.45. (X3)	Overcurrent Devices	OCPDs
	724.45(A)	Overcurrent Devices	OCPDs
	724.45(B)	Overcurrent Protection	Fine as is
	724.45(B)	Overcurrent Device	OCPD
	724.45(C). (X2)	Overcurrent protective devices	OCPDs
	724.45(D)	Overcurrent Protection	Fine as is
	724.45(E)	Overcurrent Protection	Fine as is
3	Article 725		
	725.1 In	Overcurrent Protection	Fine as is

	725.127	Overcurrent Device	OCPD
3	**Article 760**		
	760.41(B)	Overcurrent protective device	OCPD
	760.41(B)	Overcurrent protection devices	OCPDs
	760.43. (X3)	Overcurrent Protection	Fine as is
	760.45. Title	Overcurrent device	Overcurrent protective device
	760.45	Overcurrent protection devices	OCPDs
	760.45 Ex 1 & 2	Overcurrent Protection	Fine as is
	760.121(B)	Branch-Circuit Overcurrent protective device	OCPD
	760.121(B)	Overcurrent protection devices	OCPDs
	760.127	Overcurrent Protection	Fine as is
	760.127	Overcurrent Device	OCPD
3	**Article 794**		
	794.1	Overcurrent Protection	Fine as is

CMP-10 TG-4 Review of Overcurrent Language for the Articles undeer the purview of CMP-1			
CMP	**NEC Section (using First Draft of 2026 NEC)**	**Current Language**	**"New" Language**
1	**Article 110**		
	110.10.	overcurrent protective devices	OCPDs
	110.10.	circuit protective devices	Fine as is
	110.26(C)(2)	overcurrent devices	OCPD
	110.26(C)(3)	overcurrent devices	OCPD
	110.52	Overcurrent protection	Fine as is
	110.52	Overcurrent	Motor-operated Equipment shall be provided with overcurrent protection
	110.52	Overcurrent	Transformers shall be provided with overcurrent protection

CMP-10 TG-4 Review of Overcurrent Language for the Articles undeer the purview of CMP-2			
CMP	**NEC Section (using First Draft of 2026 NEC)**	**Current Language**	**"New" Language**
2	**Article 100**		
	Branch Circuit (Branch-Circuit)	overcurrent device	overcurrent protective device (OCPD)
2	**Article 120**		
	120.5(E)	overcurrent device	OCPD
	120.7(B)	overcurrent protective device	OCPD
	120.87(3)	Overcurrent protection	Fine as is
2	**Article 210**		
	210.4(A)	branch-circuit overcurrent protective device, OCPD	Fine as is
	210.4(C)	branch-circuit OCPD	Fine as is
	210.11(B)	branch-circuit OCPD	Fine as is
	210.12(A)	branch-circuit OCPD (X-8)	Fine as is
	210.18	~~overcurrent device~~ OCPD (X-2)	Fine as is
	210.19(A)(1)EX	branch-circuit OCPD	Fine as is
	210.20.	Overcurrent protection	Fine as is
	210.20.	branch-circuit OCPD	Fine as is
	210.20(A)	branch-circuit OCPD	Fine as is
	210.20(C)	branch-circuit OCPD	Fine as is
	T-210.24	Overcurrent protection	Fine as is
2	**Annex D**		
	D3. (X2)	Overcurrent Protection	CMP-2 To review references to OCPD and the revised terms.
	D3a. (X8)	Branch-Circuit OCPD	CMP-2 to Review
	D3a.	Overcurrent Protection	CMP-2 to Review
	D3a. (X2)	Branch-Circuit OCPD	CMP-2 to Review

CMP-10 TG-4 Review of Overcurrent Language for the Articles undeer the purview of CMP-3			
CMP	NEC Section (using First Draft of 2026 NEC)	Current Language	"New" Language
3	Article 100		
	Fault Managed Power.	Overcurrent protection	Fine as is
	Fire Alarm Circuit	Overcurrent device	overcurrent protective device (OCPD)
3	Article 300		
	300.5-T	Overcurrent Protection	Fine as is
	300.17(I)	Overcurrent Device	OCPD
	300.28(C)(3). (X5)	Overcurrent Protection	Fine as is
3	Article 590		
	590.6(A)	Overcurrent Protection	Fine as is
	590.6(B)	be protected from Overcurrent	shall be provided with overcurrent protection
	590.9. Title	Overcurrent protective device	Fine as is
	590.9(A)	Overcurrent protective devices	OCPDs
	590.9(B) Title	Service Overcurrent protective devices	Fine as is
	590.9(B)	Overcurrent protective devices	OCPDs
3	Article 721		
	721.50(A)	Overcurrent	Fine as is
3	Article 722		
	722.1	Overcurrent Protection	Fine as is
3	Article 724	Class 1	
	724.40(B). (X3)	Overcurrent Devices	OCPDs
	724.40(B). (X2)	Overcurrent Device	OCPD
	724.40(B). (X2)	Overcurrent Protection	Fine as is
	724.43. (X4)	Overcurrent Protection	Fine as is
	724.45	Overcurrent Device	OCPD
	724.45. (X3)	Overcurrent Devices	OCPDs
	724.45(A)	Overcurrent Devices	OCPDs
	724.45(B)	Overcurrent Protection	Fine as is
	724.45(B)	Overcurrent Device	OCPD
	724.45(C). (X2)	Overcurrent protective devices	OCPDs
	724.45(D)	Overcurrent Protection	Fine as is
	724.45(E)	Overcurrent Protection	Fine as is
3	Article 725		
	725.1 In	Overcurrent Protection	Fine as is

	725.127	Overcurrent Device	OCPD
3	**Article 760**		
	760.41(B)	Overcurrent protective device	OCPD
	760.41(B)	Overcurrent protection devices	OCPDs
	760.43. (X3)	Overcurrent Protection	Fine as is
	760.45. Title	Overcurrent device	Overcurrent protective device
	760.45	Overcurrent protection devices	OCPDs
	760.45 Ex 1 & 2	Overcurrent Protection	Fine as is
	760.121(B)	Branch-Circuit Overcurrent protective device	OCPD
	760.121(B)	Overcurrent protection devices	OCPDs
	760.127	Overcurrent Protection	Fine as is
	760.127	Overcurrent Device	OCPD
3	**Article 794**		
	794.1	Overcurrent Protection	Fine as is

CMP-10 TG-4 Review of Overcurrent Language for the Articles undeer the purview of CMP-4			
CMP	NEC Section (using First Draft of 2026 NEC)	Current Language	"New" Language
4	Article 690		
	690.2	PV dc Overcurrent protective devices	PV dc OCPDs
	690.8	Overcurrent Device	OCPD and OCPDs
	690.9. Title	Overcurrent Protection	Fine as is
	690.9(A). (X2)	be protected from Overcurrent	shall be provided with overcurrent protection
	690.9(A)(1). Title	Overcurrent Protection	Fine as is
	690.9(A)(1).	Overcurrent protective devices	OCPDs
	690.9(A)(2). Title	Overcurrent Protection	Fine as is
	690.9(A) (2)	be protected from Overcurrent	shall be provided with overcurrent protection
	690.9(A) (2) In	Overcurrent protection	Fine as is
	690.9(A) (2) In	Overcurrent device	OCPD
	690.9(A)(3)	Overcurrent	Fine as is
	690.9(B)	shall be permitted to prevent overcurrent of conductors	Fine as is
	690.9(B)	Overcurrent device	OCPD and OCPDs
	690.9(C)	Overcurrent protective device and Devices	OCPD and OCPDs
	690.31(E)	Overcurrent protective devices	OCPDs
	690.45	Overcurrent protective device	OCPD
	690.45	Overcurrent Device	OCPD
4	Article 692		
	692.8. Title	Overcurrent Device	Overcurrent Protective Devices
	692.8	Overcurrent protective device	OCPDs
	692.9	Overcurrent Protection	Fine as is
	692.9	Overcurrent Devices	OCPDs
4	Article 694		
	694.7(D)	Overcurrent Device	OCPD
	694.12(B). Title	Overcurrent Device	Overcurrent Protective Device
	694.12(B)(2). Title	Overcurrent Devices	Overcurrent Protective Devices
	694.12(B)(2)	Overcurrent Devices	OCPDs
	694.15	Overcurrent Protection	Fine as is
	694.15	Overcurrent Devices	OCPDs
	694.15 In	Overcurrent Protection	Fine as is
	694.15(B)(1)	Overcurrent Protection	Fine as is
	694.15(C)	Overcurrent Devices	OCPDs

4	**Article 705**		
	705.11(C). Title	Overcurrent Protection	Fine as is
	705.11(C)	be protected from overcurrent	have overcurrent protection
	705.11(C)(1). (1) (2) (3)	Overcurrent protective device	OCPD
	705.11(C)(2)	Overcurrent protection devices	OCPDs
	705.12(A)(2). (X4)	Overcurrent Device	OCPD
	705.12(A)(3)	Overcurrent Devices	OCPDs
	705.12(B)	(Multiple) Overcurrent Device and (s)	OCPD. And OCPDs
	705.12(B)	(Warning labels) Overcurrent Device and (s)	Overcurrent Protective Device and Devices
	705.28(B)Ex.1	Overcurrent Devices	OCPDs
	705.28(B)Ex.3	Overcurrent Device	OCPD
	705.30. Title	Overcurrent Protection	Fine as is
	705.30(A). (X2)	Overcurrent Protection	Fine as is
	705.30(A)	Overcurrent Devices	OCPDs
	705.30.(C)	Overcurrent Devices	OCPDs
	705.30.(F)	Overcurrent Protection	Fine as is
	705.70.	Overcurrent Devices	OCPDs
	705.70.	Overcurrent Protection	Fine as is

CMP-10 TG-4 Review of Overcurrent Language for the Articles undeer the purview of CMP-5			
CMP	NEC Section (using First Draft of 2026 NEC)	Current Language	"New" Language
5	Article 100		
	Ground-Fault Current Path, Effective	overcurrent protective device	overcurrent protective device (OCPD)
	Ground-Fault Protection of Equipment	overcurrent device	overcurrent protective device (OCPD)
5	Article 200		
	200.10(E)	overcurrent device	OCPD
5	Article 250		
	250.4(A)(5). Title	Overcurrent protective Device	Fine as is
	250.4(A)(5)	Overcurrent Device	OCPD
	250.4(B)(4)	Overcurrent Devices	OCPDs
	250.30(A)(1)	Overcurrent Device	OCPD
	250.30(A)(1)	Overcurrent Devices	OCPDs
	250.32(B)(2). (X4)	Overcurrent Protection	Fine as is
	250.32(C)(2). (X4)	Overcurrent Protection	Fine as is
	250.35(B)	Overcurrent Protection	Fine as is
	250.36(D)	Overcurrent Device	Fine as is
	250.36(E)(1)	Overcurrent Device	OCPD
	250.102(B)(2)	Overcurrent Protection	Fine as is
	250.102(D). (X3)	Overcurrent Devices	OCPDs
	250.118(A)(5)	Overcurrent Devices	OCPDs
	250.118(A)(6)	Overcurrent Devices	OCPDs
	250.118(A)(7)	Overcurrent Devices	OCPDs
	250.122(C)	Overcurrent Device	OCPD
	250.122(F)(1). (X3)	Overcurrent protective device	OCPD
	250.122(G)	Overcurrent Device	OCPD
	250.142. (X2)	Overcurrent Device	OCPD
	250.148	Overcurrent Device	OCPD
	250.164	Overcurrent Device	OCPD
	250.166	Overcurrent Protection	Fine as is
	250.169	Overcurrent Devices	OCPD
5	Article 270		
	270.4(A)(5)	Overcurrent Device	OCPD
	270.4(B)(4)	Overcurrent Devices	OCPDs
	270.30(A)(1)	Overcurrent Devices	OCPDs

	270.32(B)(2). (X4)	Overcurrent Protection	Fine as is
	270.32(C)(2). (X4)	Overcurrent Protection	Fine as is
	270.35(B)	Overcurrent Protection	Fine as is
	270.35(B)	Overcurrent protective device	OCPD
	270.36(D)	Overcurrent Device	OCPD
	270.36(E)	Overcurrent Devices	OCPDs
	270.102(C)(2)	Overcurrent Protection	Fine as is
	270.102(D)	Overcurrent Device	OCPDs
	270.114(C)(3)	Overcurrent setting	CMP to review Language based on new terms
	270.118	Overcurrent Devices	OCPDs
	270.142	Overcurrent Devices	OCPDs
	270.148(B)	Overcurrent Device	OCPD
	270.164(B)	Overcurrent Device	OCPD
	270.166(A)	Overcurrent Protection	Fine as is
	270.169	Overcurrent Devices	OCPDs

CMP-10 TG-4 Review of Overcurrent Language for the Articles undeer the purview of CMP-6			
CMP	**NEC Section (using First Draft of 2026 NEC)**	**Current Language**	**"New" Language**
6	**Article 310**		
	310.10(G).	Overcurrent Protection	Fine as is
	310.15(A)	Overcurrent Protection	Fine as is
	310.16-T	Overcurrent Protection	Fine as is
	310.17-T	Overcurrent Protection	Fine as is
6	**Article 335**		
	335.90.	Overcurrent Protection	Fine as is
6	**Article 382**		
	382.4	Supplementary Overcurrent Protection	Supplementary Overcurrent Protective Device
6	**Article 400**		
	400.16	Overcurrent Protection	Fine as is
	400.16	protected against Overcurrent	shall be provided with overcurrent protection
6	**Article 402**		
	402.14 (X2)	Overcurrent Protection	Fine as is

CMP-10 TG-4 Review of Overcurrent Language for the Articles undeer the purview of CMP-7			
CMP	NEC Section (using First Draft of 2026 NEC)	Current Language	"New" Language
7	Article 100		
	Service Equipment, Mobile Home	overcurrent protective devices	overcurrent protective devices (OCPDs)
7	Article 545		
	545.24	Branch-circuit overcurrent protective device	Branch-circuit OCPD
	545.24(B) Title	Branch Circuit Overcurrent Protection Device	Overcurrent protective devices
	545.24(B)	a Branch Circuit Overcurrent Protective Device	an OCPD
7	Article 547		
	547.41(A)(6). (X2)	Overcurrent Protection	Fine as is
	547.41(B)	Overcurrent Protection	Fine as is
	547.42	Overcurrent Protection	Fine as is
7	Article 550		
	550.11(B). Title	Branch-Circuit protective equipment	Branch-Circuit Overcurrent Protection
	550.11(B)	Overcurrent Protection	Fine as is
	550.11(B)	Branch-Circuit Overcurrent Devices	OCPDs
	550.11(B)	Overcurrent protection size	OCPD rating
	550.15(E)	Branch-circuit overcurrent protective device	OCPD
	550.32	Overcurrent Protection	Fine as is
7	Article 551		
	551.31(A)	Overcurrent protective device	OCPD
	551.31(C)	Overcurrent protective device	OCPD
	551.31(D)	Overcurrent Protection	Fine as is
	551.42	Overcurrent Protection	Fine as is
	551.43. Title	Branch-Circuit protection	Branch-Circuit Overcurrent Protection
	551.43(A)	Branch Circuit Overcurrent Devices	Branch-Circuit OCPDs
	551.43(A)(3)	Overcurrent Protection	Fine as is
	551.45(C)	Overcurrent protective device	OCPD
	551.47(Q)	Overcurrent protective device	OCPD
	551.47(R)	Overcurrent Protection	Fine as is
	551.47(S)	Overcurrent Protection	Fine as is
	551.74	Overcurrent Protection	Fine as is
7	Article 552		
	552.10.(E) Title	Overcurrent Protection	Fine as is
	552.10(E)(1)	Overcurrent protective devices	OCPDs

	T-552.10(E)(1)	Overcurrent Protection	Fine as is
	552.10(E)(4). (X2)	Overcurrent protective device	OCPD
	552.42(A)	Branch Circuit Overcurrent Devices	OCPDs
	552.42(A)	Overcurrent Protection	Fine as is
	552.45(C)	Overcurrent protective device	OCPD
	552.46(A) IN	Overcurrent Protection	Fine as is
	552.47(P)	Overcurrent protective device	OCPD
	552.47(Q)	Overcurrent Protection	Fine as is
7	**Article 555**		
	555.53	Overcurrent protective device	OCPD
7	**Article 675**		
	675.6	Branch Circuit Overcurrent Protective Device	OCPD
	675.7	Branch Circuit Overcurrent Protective Devices	OCPDs
	675.8	Overcurrent Protection	Fine as is
7	**Article 682**		
	682.15(B)	Feeder Overcurrent protective device	Feeder OCPD

CMP-10 TG-4 Review of Overcurrent Language for the Articles undeer the purview of CMP-8			
CMP	NEC Section (using First Draft of 2026 NEC)	Current Language	"New" Language
8	Article 312		
	312.11. Title	Overcurrent Devices	Overcurrent Protective Device
	312.11	Overcurrent Devices	OCPDs
	312.11(A). (X3)	Overcurrent Device	OCPDs
	312.11(B)	Overcurrent Devices	OCPDs
	312.11(B)(1)	Overcurrent Device	OCPD
8	Article 366		
	366.12	Overcurrent Devices	OCPDs
	366.56(D)	Overcurrent Protection	Fine as is
8	Article 368		
	368.17(A). Title	Overcurrent Protection	Fine as is
	368.17	Overcurrent Protection	Fine as is
	368.17(A)	Protected against Overcurrent	shall be provided with overcurrent protection
	368.17(B). (X2)	Overcurrent Protection	Fine as is
	368.17(B)	Overcurrent Device	OCPD
	368.17(C)	Overcurrent Devices	OCPDs
	368.17(C)Ex.2	Branch-Circuit Overcurrent Device	Branch-Circuit OCPD
	368.17(C)Ex.3	Overcurrent Device	OCPD
	368.17(C)Ex.4	Branch-Circuit overcurrent plug-in device	CMP to review Language based on new terms
	368.17(D). Title	Overcurrent Protection	Fine as is
	368.17(D)	Protected against Overcurrent	shall be provided with overcurrent protection
8	Article 370		
	370.23. Title	Overcurrent Protection	Fine as is
	370.23	Protected against Overcurrent	shall be provided with overcurrent protection
8	Article 371		
	371.17. Title	Overcurrent Protection	Fine as is
	371.17	Overcurrent Protection	Fine as is
	371.17 (A)-(C). Titles	Overcurrent Protection	Fine as is
	371.17(A)-(C)	Protected against Overcurrent	shall be provided with overcurrent protection
	371.17(D)	Protected against Overcurrent	shall be provided with overcurrent protection
	371.17(F)	Overcurrent	shall be provided with overcurrent protection
	371.17(G)	Overcurrent Protection	
	371.17(G)Ex	Overcurrent Protection	Fine as is
	371.17(G)Ex	Overcurrent Device	OCPD

CMP-10 TG-4 Review of Overcurrent Language for the Articles undeer the purview of CMP-9			
CMP	NEC Section (using First Draft of 2026 NEC)	Current Language	"New" Language
9	Article 265		
	265.18	Overcurrent Device	OCPD
	265.20.	Overcurrent Protection	Fine as is
	265.20.	Overcurrent protective devices	OCPDs
	265.20.	Overcurrent Devices	OCPDs
9	Article 266		
	266.1	Overcurrent Protection	Fine as is
	266.5	Overcurrent Protection	Fine as is
	266.5	Protected against overcurrent	shall be provided with overcurrent protection
	266.5	Overcurrent Device	OCPD
9	Article 268		
	268.2. (X2)	Overcurrent Protection	Fine as is
	268.70(F)	Overcurrent Devices	OCPDs
	268.82. (X4)	Overcurrent Protection	Fine as is
	Art. 268 Part VII	Overcurrent Protection	Fine as is
	268.90.	Overcurrent Device	OCPD
	268.90.	Overcurrent Devices	OCPDs
	268.91	Overcurrent Device	OCPD
	268.92	Overcurrent Devices	OCPDs
	268.93	Overcurrent Device	OCPD
9	Article 450		
	450.5 (previously 450.3). (X3)	overcurrent protection	Fine As Is
	450.5(A) and Table. (X3)	overcurrent protection	Fine As Is
	Table 450.5(A) Footnote 2. (X4)	overcurrent device	OCPD
	450.5(B)	overcurrent protection	Fine As Is
	Table 450.5(B) and Table (X2)	overcurrent protection	OCPD
	Table 450.5(B) Footnote 2. (X3)	overcurrent device	OCPD
	Table 450.5(B) Footnote 3	overcurrent protection	OCPD
	450.6(A) Title	overcurrent protection	Fine As Is
	450.6(A) (X3)	overcurrent device	OCPD
	450.6(A) Exception	overcurrent device	OCPD
	450.7(A)(1). (X2)	overcurrent protection	OCPD
	450.7(A)(2). Title	overcurrent protection	Fine As Is

	450.7(A)(2)	overcurrent sensing device	Fine As Is
		overcurrent protection	OCPD
		overcurrent device	OCPD
		branch or feeder protective devices	branch or feeder OCPDs
	450.7(A)(3)	overcurrent device	OCPD
	450.7(B)(2)	overcurrent protection	Fine As Is
	450.7(B)(2)(a)	overcurrent protective device	OCPD
	450.7(B)(2)(b)	overcurrent protection	OCPD
	450.7(B)(2)(b)	overcurrents	Fine As Is
	450.7(B)(2)(b) Exception	overcurrent device	OCPD
	450.8(A). (X2)	overcurrent protection	Fine As Is
	450.8(A)(1)	overcurrent protection	Fine As Is
	450.8(A)(2)	overcurrent protection	Fine As Is
	450.8(A)(3)	protective device	OCPD
	450.8(A)(4)(a)	protective device	OCPD
	450.8(B). Title	Overcurrent Protection	Fine As Is
	450.8(B)	overcurrent device	OCPD
	450.9	overcurrent protection	Fine As Is
	450.9	protective devices (2x)	OCPDs
	450.23(A)(1)(d) Informational Note	overcurrent protection	OCPD
	450.23(B)(1) Informational Note 2	overcurrent protection	OCPD
9	**Article 495**		
	495.62. Title	Overcurrent Protection	Fine As Is
	495.72	Overcurrent Relay	Fine As Is

CMP-10 TG-4 Review of Overcurrent Language for the Articles undeer the purview of CMP-10			
CMP	**NEC Section (using First Draft of 2026 NEC)**	**Current Language**	**"New" Language**
10	**Article 100**		
	Circuit Breaker	Overcurrent	Fine as is
	Coordination, Selective. (Selective Coordination)	Overcurrent condition	Fine as is
	Coordination, Selective. (Selective Coordination)	overcurrent protective devices	overcurrent protective devices (OCPDs)
	Coordination, Selective. (Selective Coordination)	overcurrents	Fine as is
	Coordination, Selective. (Selective Coordination)	overcurrent protective device	overcurrent protective device (OCPD)
	Current Limiting (as applied to overcurrent protection devices)	overcurrent protection devices	overcurrent protective devices (OCPDs)
	Feeder	final branch-circuit overcurrent protective device	overcurrent protective device (OCPD)
	Fuse	overcurrent protective device	overcurrent protective device (OCPD)
	Fuse	overcurrent	Fine as is
	Fuse, Electronically Actuated	overcurrent protective device	overcurrent protective device (OCPD)
	Fuse, Electronically Actuated	overcurrent	Fine as is
	Overcurrent	Overcurrent protection	Fine as is
	Overcurrent Protective Device, Branch-Circuit	Revise with the term Overcurrent Protective Device. (OCPD)	
	Overcurrent **Protective** Device, Supplementary (need to Revise term with acronym)	overcurrent protective device	overcurrent protective device (OCPD)
	Panelboard	overcurrent devices	overcurrent protective devices (OCPDs)
	Surge-Protective Device (SPD). (X2)	overcurrent device. (X2)	overcurrent protective device (OCPD)
	Switchboard	overcurrent	overcurrent protective devices (OCPDs)
	Tap Conductor	Overcurrent protection	Fine as is
10	**Article 215**		
	215.1	Overcurrent protection	Fine as is
	215.4(A)(1)Ex.1	overcurrent devices protecting the feeders	feeder OCPD
	215.4(A)(1)Ex.3	overcurrent device	OCPD
	215.5 Title	Overcurrent protection	Fine as is
	215.5	Feeders shall be protected against overcurrent	Feeders shall be provided with overcurrent protection in accordance with Article 240, Parts I
	215.5	overcurrent device	OCPD
	215.5Ex	overcurrent device protecting the feeders	feeder OCPDs
	215.5Ex	overcurrent device	OCPD

	215.18(B)	branch circuit overcurrent devices	OCPDs
10	**Article 225**		
	225.40. Title	Overcurrent protective devices	Fine as is
	225.40.	feeder overcurrent device (x2)	feeder OCPD
	225.40.	branch circuit overcurrent devices	Branch circuit OCPDs
	225.42(B)	branch circuit overcurrent devices	OCPDs
10	**Article 230**		
	230.7 Ex.2	Overcurrent protection	Fine as is
	230.42(A)(1)	overcurrent device (X3)	OCPD
	230.82(6)	Overcurrent protection	Fine as is
	230.82(7)	Overcurrent protection	Fine as is
	230.82(8)	Overcurrent protection	Fine as is
	230.82(9)	Overcurrent protection	Fine as is
	230.82(10)	Overcurrent protection	Fine as is
	230 Part VII	Overcurrent protection	Fine as is
	230.90(A)	overcurrent device	OCPD
	230.90(A)Ex.3	overcurrent device	OCPD
	230.90(B)	overcurrent device	OCPD
	230.91	overcurrent device (X2)	OCPD
	230.92	overcurrent device (X4)	OCPDs and OCPD
	230.93	overcurrent device	OCPD
	230.94	overcurrent device (X3)	OCPD
	230.94	Overcurrent protection (X2)	Fine as is
	230.95(A)	overcurrent device	OCPD
	230.95(B)	overcurrent device	OCPD
10	**Article 240**		
	240	Overcurrent Protection	Fine as is
	240.1 (X3)	Overcurrent protection	Fine as is
	240.2	branch-circuit Overcurrent protective devices	~~branch-circuit~~ Overcurrent protective devices
	240.4. Title	Protection of Conductors	Overcurrent Protection of Conductors
	240.4	Protected against overcurrent	shall be provided with overcurrent protection in accordance with
	240.4(B). Title	Overcurrent devices	Overcurrent protective Devices
	240.4(B)	Overcurrent device	OCPD
	240.4(B)	Overcurrent protective device	OCPD

	240.4(C). Title	Overcurrent devices	Overcurrent protective Devices
	240.4(C). (X2)	Overcurrent device.	OCPD
	240.4(D)	Overcurrent Protection	Fine as is
	240.4(D)(1)	Overcurrent protection	Fine as is
	240.4(D)(1)(2)		(a) OCPDs in accordance with 240.7 shall be marked for use with 18 AWG copper conductor (b) Delete (c) change to (b)
	240.4(D)(2)	Overcurrent protection	Fine as is
	240.4(D)(2)(2)		(a) OCPDs in accordance with 240.7 shall be marked for use with 16 AWG copper conductor (b) Delete (c) change to (b)
	240.4(D)(3)	Overcurrent protection	Fine as is
	240.4(D)(3)(2)		~~(a) Fuses and circuit breakers in accordance with 240.7 marked for use with 14 AWG copper-clad aluminum conductor~~ ~~(b) Delete~~
	240.4(D)(3)(2)		OCPDs in accordance with 240.7 shall be marked for use with 14 AWG copper-clad aluminum conductor
	240.4(E)	Protected against overcurrent	shall be permitted to have overcurrent protection in accordance with the following
	240.4(F)	Overcurrent protection	Fine as is
	240.4(F)	Overcurrent protective device	OCPD
	240.4(G). (X2)	Overcurrent protection	Fine as is
	240.4(H)	Protected against overcurrent	shall be provided with overcurrent protection in accordance with
	240.5	Protected against overcurrent	shall be provided with overcurrent protection in accordance with
	240.5(A)	Overcurrent device	OCPD
	240.5(A)	Protected against overcurrent	Fixture wires shall be provided with overcurrent protection in accordance with
	240.5(A)	Supplementary overcurrent protection	Fine as is
	240.5(B) Title	Branch-circuit overcurrent device.	Branch-Circuit Overcurrent protective Devices

	240.9	Protection of conductors against overcurrent	Fine as is
	240.10. Title	Supplementary Overcurrent protection	Fine as is
	240.10.	Supplementary overcurrent protection	Fine as is
	240.10.	Branch-Circuit overcurrent devices	OCPDs
	240.10.	Supplementary overcurrent devices	Supplementary OCPDs
	240.11. (X2)	Feeder overcurrent protective devices.	Feeder OCPDs
	240.11. (X2)	Service overcurrent protective device.	Service OCPD
	240.15(A). Title	Overcurrent device	Overcurrent protective device required
	240.15(A)	Overcurrent device	OCPD
	240.15(A)	Overcurrent trip. Overcurrent relay	Fine as is
	240.15(B) Title	Overcurrent device	Circuit breaker as Overcurrent protective device
	240.16	Branch circuit overcurrent protective devices	OCPDs
	240.21	Overcurrent Protection	Fine as is
	240.21	overcurrent protective device	OCPD
	240.21 (A)	Overcurrent Protection	Fine as is
	240.21 (B)	Overcurrent Protection	Fine as is
	240.21 (B) (1) (1) (b)	Overcurrent device(s)	OCPDs
	240.21 (B) (1) (1) (b)	overcurrent protective device	OCPD
	240.21 (B)(1) (1) (4)	Overcurrent device	OCPD
	240.21 (B) (1)(1) (4) In	Overcurrent Protection	Fine as is
	240.21 (B) (2) (1)	Overcurrent device	OCPD
	240.21 (B) (2) (2)	Overcurrent devices	OCPDs
	240.21 (B) (3) (1)	Overcurrent device	OCPD
	240.21 (B) (3) (2)	Overcurrent device	OCPD
	240.21 (B) (4) (3)	Overcurrent device	OCPD
	240.21 (B) (4) (4)	Overcurrent device	OCPD
	240.21 (B) (4) (4)	Overcurrent devices	OCPDs
	240.21 (B) (5) (2)	Overcurrent device	OCPD
	240.21 (B) (5) (2)	Overcurrent devices	OCPDs
	240.21 (B) (5) (3)	Overcurrent device	OCPD
	240.21 (C). (X2)	Overcurrent Protection	Fine As Is
	240.21 (C) (1). Title	Title change	Overcurrent Protective Device
	240.21 (C) (1)	"…protected by overcurrent protection…"	Fine As Is
	240.21 (C) (1)	Overcurrent protective device	OCPD
	240.21 (C) (2) (1) (b)	Overcurrent device(s)	OCPDs

	240.21 (C) (2) (1) (b)	Overcurrent device	OCPD
	240.21 (C) (2) (4)	Overcurrent device	OCPD
	240.21 (C) (2) (4)	Overcurrent device	OCPD
	240.21 (C) (2) (4)	Overcurrent protection	Fine as is
	240.21 (C) (3) (2)	Overcurrent devices	OCPDs
	240.21 (C) (3) (3)	Overcurrent devices	OCPDs
	240.21 (C) (4) (2)	Overcurrent device	OCPD
	240.21 (C) (4) (2)	Overcurrent devices	OCPDs
	240.21 (C) (4) (3)	Overcurrent device	OCPD
	240.21 (C) (5)	Overcurrent Protection	Fine As Is
	240.21 (C) (6) (1)	Overcurrent device	OCPD
	240.21 (D)	Overcurrent devices	OCPDs
	240.21 (E)	.shall be permitted to be protected against overcurrent.	"..shall be permitted to have overcurrent protection.."
	240.21 (F)	.shall be permitted to be protected against overcurrent.	"..shall be permitted to have overcurrent protection.."
	240.21 (H). (X2)	Overcurrent Protection	Fine As Is
	240.22. (X2)	Overcurrent device	OCPD
	240.24(A)	Supplementary overcurrent protection	Fine as is
	240.24(A). (X4)	Overcurrent protective devices	OCPDs
	240.24(B)	Overcurrent devices	OCPDs
	240.24(B)(1). Title	Feeder overcurrent protective devices	Feeder OCPDs
	240.24(B)(1)	Service overcurrent protective devices	Service OCPDs
	240.24(B)(2). TITLE	Branch-circuit overcurrent protective device	Fine as is
	240.24(B)(2).	Branch-circuit overcurrent protective device	Branch-Circuit OCPD
	240.24(C)	Overcurrent protective devices	OCPDs
	240.24(D)	Overcurrent protective devices	OCPDs
	240.24(E)	Overcurrent protective devices	OCPDs
	240.24(E)	Supplementary overcurrent protection	Fine as is
	240.24(E) (X2)	Overcurrent protective devices	OCPDs
	240.24(F)	Overcurrent protective devices	OCPDs
	240.30(A)	Overcurrent devices	OCPDs
	240.32	Overcurrent devices	OCPDs
	240.33	Overcurrent devices	OCPDs
	240.86	Overcurrent device	OCPD
	240.86(B)	Overcurrent device	OCPD
	240.86(C)	Overcurrent device	OCPD

	240.87	Overcurrent device	OCPD
	240.90.	Overcurrent protection	Fine as is
	240.91(B). (X2)	Overcurrent device	OCPD
	240.92	Overcurrent device	OCPD
	240.92(A)	~~be protected~~	shall be provided with overcurrent protection
	240.92(C)	Overcurrent protection	Fine as is
	240.92(C)(1)(1)	Overcurrent device	OCPD
	240.92(C)(1)(2)	protective devices	Fine as is
	240.92(C)(1)(3)	Overcurrent devices	OCPDs
	240.92(C)(2)(1)	Overcurrent device	OCPD
	240.92(C)(2)(2) (X3)	Overcurrent devices	OCPDs
	240.92(C)(2)(3)	Overcurrent relaying	Fine as is
	240.92(C)(2)(4)	Overcurrent device	OCPD
	240.92(D)	Overcurrent protection	Fine as is
	240.92(D)(2). (X3)	Overcurrent devices	OCPDs
	240.92(D)(4)	Overcurrent device	OCPD
	240.92(E)	Overcurrent device	OCPD
	240.92(E)	Overcurrent protection	Fine as is
10	**Article 242**		
	242.14(ABC)	Overcurrent device	OCPD
	242.16	Overcurrent protection	Branch-circuit OCPD
10	**Article 404**		
	404.5	Overcurrent Devices	OCPDs
10	**Article 408**		
	408.4(A)	Overcurrent device	OCPD
	408.6 (X2)	Overcurrent protection devices	OCPDs
	408.36. Title	Overcurrent protection	Fine as is
	408.36. (X2)	Overcurrent protective device	OCPD
	408.36. (X3)	Overcurrent devices	OCPDs
	408.36(A)	Overcurrent protection	Fine as is
	408.36(B)	Overcurrent protection	Fine as is
	408.36(C)	Overcurrent device	OCPD
	408.36(D)	Overcurrent protection devices	OCPDs
	408.52	Overcurrent devices	OCPDs
	408.54	Overcurrent devices	OCPDs

	408.55	Overcurrent devices	OCPDs

CMP-10 TG-4 Review of Overcurrent Language for the Articles undeer the purview of CMP-11			
CMP	NEC Section (using First Draft of 2026 NEC)	Current Language	"New" Language
11	Article 409		
	409.21. TITLE	Overcurrent Protection	Fine as is
	409.21(A)	Overcurrent Protection	Fine as is
	409.21(B)	Protection	Overcurrent protection
	409.21(B)	overcurrent protective device	OCPD
	409.21(B)	Overcurrent Protection	Fine as is
	409.21(C). (X2)	overcurrent protective device	OCPD
	409.104	Overcurrent Devices	OCPDs
11	Article 430		
	430.10(A) In.	Overcurrent Device	OCPD
	430.22(G)(1)(1)	Overcurrent Protection	Fine as is
	430.22(G)(1)(2)	Overcurrent Protection	Fine as is
	430.22(G)(2)(1)	Overcurrent Protection	Fine as is
	430.22(G)(2)(2)	Overcurrent Protection	Fine as is
	430.28	Branc-Circuit protective device	OCPD
	430.28	Overcurrent Device	OCPD
	430.51	Overcurrent	Fine as is
	430.53(C)(5)	Overcurrent Protection	Fine as is
	430.55	Overcurrent Protection	Fine as is
	430.61	Overcurrents	Fine as is
	430.62(A)Ex.2	Feeder Overcurrent protective device	Feeder OCDP
	430.62(A)Ex.2	Overcurrent Protection	Fine as is
	430.62(B)	Feeder Overcurrent protective device	Feeder OCDP
	430.63Ex.	Feeder Overcurrent device	Feeder OCDP
	430.63Ex.	Overcurrent Protection	Fine as is
	430.72. Title	Overcurrent Protection	Fine as is
	430.72(A)	protected against overcurrent	shall be provided with overcurrent protection in accordance with
	430.72(A)	Branch-circuit overcurrent protective devices	OCPDs
	430.72(A)	protected against overcurrent	shall be provided with overcurrent protection in accordance with
	430.72(B). (X2)	Overcurrent Protection	Fine as is
	430.72(B)	Overcurrent Device	OCPD

	430.72(B)	Overcurrent Protection	Fine as is
	430.72(B)(1) (X3)	Overcurrent Protection	Fine as is
	430.72(B)(2) Title	Branch-circuit overcurrent protective device	Fine as is
	430.72(B)(2) (X2)	protective devices	OCPDs
	430.72(C)Ex.	Overcurrent Protection	Fine as is
	430.72(C)(3)	Overcurrent Devices	OCPDs
	430.72(C)(4)	Overcurrent Device	OCPD
	430.72(C)(5)	Protection	Overcurrent protection
	430.87	Overcurrent Device	OCPD
	430.94. (X2)	Overcurrent Protection	Fine as is
	430.94. (X3)	Overcurrent protective device	OCPD
	430.109(A)(7)	Overcurrent protection	Fine as is
	430.109(B)	Branch-circuit overcurrent device	branch-circuit OCPD
	430.111(A). (X2)	Overcurrent Device	Fine as is
	430.112 Ex.	Branch circuit protective device	Suggest CMP to Review
	430.206. Title	Overcurrent protection	Fine as is
	430.206(B)(2)	considered to have Overcurrent	Overload
	430.206(C)	Fault-Current protection	Suggest CMP to Review
	430.207	Overcurrent (overload)Relays	Fine as is
	430.207	Overcurrent Relays	Fine as is
11	**Article 440**		
	440.21	Overcurrent	Fine as is
	440.21	Overcurrent Protection	Fine as is
	440.22(B)(2)Ex.	Overcurrent device	OCPD
	440.52(B)	Overcurrent	shall be provided with overcurrent protection
11	**Article 460**		
	460.9. Title	Overcurrent Protection	Fine As Is
	460.9. (X3)	Overcurrent Device	OCPD
	460.25	Overcurrent Protection	Fine As Is
	460.28(B)	Overcurrent Device	OCPD

CMP-10 TG-4 Review of Overcurrent Language for the Articles undeer the purview of CMP-12			
CMP	NEC Section (using First Draft of 2026 NEC)	Current Language	"New" Language
12	Article 610		
	610. Part V	Overcurrent Protection	Fine as is
	610.41(A)	Overcurrent Devices	OCPDs
	610.43(A)(1)	Branch Circuit Overcurrent Device	OCPD
	610.53 Title	Overcurrent Protection	Fine as is
	610.53	be protected from Overcurrent	shall be provided with overcurrent protection
	610.53	Overcurrent Devices	OCPDs
	610.53(B)	Branch Circuit Overcurrent Devices	OCPDs
12	Article 620		
	620.12(A)(4)	Overcurrent Protection	Fine as is
	620.22(A)(2) Title	Overcurrent protective device	Fine as is
	620.22(A)(2)	Overcurrent Device protecting	branch-circuit OCPD
	620.22(A)(2)	Overcurrent Device	OCPD
	620.22(B)	Overcurrent Device protecting	branch-circuit OCPD
	620.22(B)	Overcurrent Device	OCPD
	620.25 Title	Overcurrent Devices	Overcurrent Protective Devices
	620.25. (X2)	Overcurrent Devices	OCPDs
	620.53	Overcurrent protective device	OCPD
	620.54	Overcurrent protective device	OCPD
	620.55	Overcurrent protective device	OCPD
	Art 620 Part VII	Overcurrent Protection	Fine as is
	620.61	Overcurrent Protection	Fine as is
	620.61(A). (X2)	be protected against Overcurrent	shall be provided with overcurrent protection
	620.62(A)	Overcurrent protective devices, (OCPD)	OCPDs
	620.62(B)	OCPDs	Fine as is
	620.62(C)	OCPDs. And. Overcurrent Devices	Fine as is. And. OCPDs
	620.62	Overcurrent protective devices	OCPDs
	620.65. (X3)	Overcurrent Devices	OCPDs
12	Article 625		
	625.60(C). (X4)	Overcurrent Protection	Fine as is
12	Article 627		
	627.41	Overcurrent Protection	Fine as is
	627.41(A)	Overcurrent Protection	Fine as is

	627.41(B)	Overcurrent Devices	OCPDs
12	**Article 630**		
	630.12	Overcurrent Protection	Fine as is
	630.12	Overcurrent Device	OCPD
	630.12(A). (X2)	Overcurrent Protection	Fine as is
	630.12(A). (X5)	Overcurrent Device	OCPD
	630.13	Overcurrent Protection	Fine as is
	630.32	Overcurrent Protection	Fine as is
	630.32	Overcurrent Device	OCPD
12	**Article 640**		
	640.9(C)	Overcurrent Protection	Fine as is
	640.22	Overcurrent protection devices	OCPDs
	640.22	Overcurrent Devices	OCPDs
	640.43	Overcurrent protection devices	OCPDs
12	**Article 645**		
	645.27	Overcurrent protective devices, (OCPD)	OCPDs
	645.27	Overcurrent protective devices	OCPDs
12	**Article 646**		
	646.7. (X11)	Overcurrent Protection	Fine as is
12	**Article 647**		
	647.5	Overcurrent Protection	Fine as is
12	**Article 650**		
	650.9	Overcurrent Protection	Fine as is
	650.9	Overcurrent Device	OCPD
12	**Article 660**		
	660.7	Overcurrent Protection	Fine as is
	660.7(A)	Overcurrent protective devices	OCPDs
	660.7(B)	Overcurrent Devices	OCPDs
	660.7(B)	Overcurrent Protection	Fine as is
	660.9	Overcurrent Devices	OCPDs
12	**Article 665**		
	665.24	Overcurrent Protection	Fine as is
12	**Article 668**		
	668.4(C)(2)	Overcurrent Protection	Fine as is
	668.21	Overcurrent Protection	Fine as is

	668.21	Overcurrent Device	OCPD
12	**Article 669**		
	669.9	Overcurrent Protection	Fine as is
	669.9	be protected from Overcurrent	shall be provided with overcurrent protection
12	**Article 670**		
	670.1	Overcurrent Protection	Fine as is
	670.4(B). (X3)	Overcurrent Protection	Fine as is
	670.5. (X4)	Overcurrent Protection	Fine as is
	670.5(C). (X2)	Overcurrent protective device	OCPD
12	**Article 685**		
	685.10.	Overcurrent Devices	OCPDs

CMP-10 TG-4 Review of Overcurrent Language for the Articles undeer the purview of CMP-13			
CMP	NEC Section (using First Draft of 2026 NEC)	Current Language	"New" Language
13	Article 100		
	Emerg.Power Supply Systems (EPSS)	overcurrent protection devices	overcurrent protective devices (OCPDs)
	Transfer-Switch B-C Emerg. Ltg.	branch-circuit overcurrent device	branch-circuit overcurrent protective device (OCPD)
13	Article 130		
	130.80(C)	overcurrent devices	OCPDs
	130.80(C)	branch-circuit overcurrent device	OCPD
13	Article 445		
	445.11	Overcurrent protective Relay	Fine as is
	445.12. Title	Overcurrent Protection	Fine as is
	445.12(A)	Overcurrent protective means	Overcurrent protection means
	445.12(B)	Overcurrent Protection	Fine as is
	445.12(B) (X2)	Overcurrent Device	OCPD
	445.12(C)	Overcurrent Device	OCPD
	445.12(D)	Overcurrent Devices	OCPDs
	445.12(E). (X3)	Overcurrent Devices	OCPDs
	445.13(A). (X2)	Overcurrent Protection	Fine as is
	445.13(B). Title	Overcurrent protection	Fine as is
	445.13(B).	Overcurrent protective device	OCPD
	445.13(B)	Overcurrent Relay	Fine as is
13	Article 455		
	455.7	Overcurrent Protection	Fine As Is
	455.7	protected from Overcurrent	shall be provided with overcurrent protection in accordance with
	455.7(A)	Overcurrent Protection	Fine As Is
	455.7(B)	Overcurrent Protection	Fine As Is
13	Article 480		
	480.4(B) IN.2	Overcurrent Protection	Fine As Is
	480.6. (X2)	Overcurrent Protection	Fine As Is
	480.7	Overcurrent Device	OCPD
13	Article 695		
	695.4(C)	Overcurrent protective devices	OCPDs
	695.4(H). Title	Overcurrent Device Selection	Overcurrent Protective Device Selection
	695.4(H)	Overcurrent Devices	OCPDs

	695.5	Overcurrent Device	OCPD
	695.5	Overcurrent protective devices	OCPDs
	695.5	Overcurrent Protection	Fine as is
	695.6	Overcurrent protective devices	OCPDs
	695.6	Overcurrent Devices	OCPD
	695.6	Overcurrent Protection	Fine as is
	695.7(A)(2)	Overcurrent Devices	OCPDs
	695.7	Overcurrent Protection	Fine as is
13	**Article 700**		
	700.4(F)(8)	Overcurrent protective devices, (OCPD)	OCPDs
	700.6(E)	Overcurrent protective device	OCPD
	700.10(B). (X6)	Overcurrent Protection	Fine as is
	700.10(B)(6)(b)(ii)	Overcurrent protective device	OCPD
	700.10(B)(6)(e)	Overcurrent protective devices	OCPDs
	Art. 700 Part VI	Overcurrent Protection	Fine as is
	700.30.	Branch-circuit overcurrent devices	OCPDs
	700.32(A)	Overcurrent protective devices, (OCPDs)	OCPDs
	700.32(A) In	Overcurrent Protection	Fine as is
	700.32(C)	Overcurrent Devices	OCPDs
13	**Article 701**		
	701.6(C)	Overcurrent protective device	OCPD
	701.10(B)(1). (X5)	Overcurrent Protection	Fine as is
	701.10(B)(1)	Overcurrent protective device	OCPD
	Art. 701. Part IV	Overcurrent Protection	OCPDs
	701.30.	Branch-Circuit Overcurrent devices	Branch-Circuit OCPDs
	701.32(A). (X2)	Overcurrent protective devices, OCPDs	OCPDs
	701.32(B). (X3)	OCPDs	Fine as is
	701.32(C). (X2)	OCPDs	Fine as is
	701.32(C)Ex	Overcurrent Devices	OCPDs
	701.32(C) In 2	OCPD and OCPDs	Fine as is
13	**Article 702**		
	702.5(C)	Overcurrent protective device	OCPD
13	**Article 706**		
	706.15(E)(1)	Overcurrent Device	OCPD
	706.30(B)	Overcurrent Devices	OCPDs

	706.31 Title	Overcurrent Protection	Fine as is
	706.31(A)	shall be protected at the source from overcurrent.	shall be provided with overcurrent protection at the source
	706.31(A)	shall be protected from overcurrent.	shall be provided with overcurrent protection
	706.31(A) In	Overcurrent Device	OCPD
	706.31(B). Title	Overcurrent Device	Overcurrent Protective Device
	706.31(B)	Overcurrent protective devices	OCPDs
	706.31(B)	Overcurrent devices	OCPDs
	706.31(C)	Overcurrent protective devices	OCPDs
	706.31(E)	Overcurrent Protection	Fine as is
	706.33(B)(2)	Overcurrent Device	OCPD
13	**Article 708**		
	708.10(B)	Overcurrent Protection	Fine as is
	708.24(E)	Overcurrent protective device	OCPD
	Art. 708. Part IV	Overcurrent Protection	Fine as is
	708.50.	Feeder- and Branch-circuit overcurrent devices	Feeder- and Branch-circuit OCPDs
	708.52(B)	Overcurrent Devices	OCPDs
	708.54(A)	Overcurrent protective devices, (OCPD)	OCPDs
	708.54(A). (B). (C)	OCPDs	Fine as is
	708.54	Overcurrent Devices	OCPDs

CMP-10 TG-4 Review of Overcurrent Language for the Articles undeer the purview of CMP-14			
CMP	**NEC Section (using First Draft of 2026 NEC)**	**Current Language**	**"New" Language**
14	**Article 500**		
	500.30(A)(2)	Branch Circuit Overcurrent Protection	OCPD
	500.30.	Overcurrent Protection	Fine as is
14	**Article 501**		
	501.105(B)(5)	Overcurrent Protection	Fine as is
	501.125(B)(2)	Motor Overcurrent	Fine as is
14	**Article 502**		
	502.120(A)	Overcurrent Devices	OCPDs
	502.120(B)(1)	Overcurrent Devices	OCPDs
	502.125	Motor Overcurrent	Fine as is
14	**Article 505**		
	505.30(A)(2)	Branch Circuit Overcurrent Protection	OCPD
	505.30.	Overcurrent Protection	Fine as is
14	**Article 506**		
	506.30.	Branch Circuit Overcurrent Protection	OCPD
	506.30.	Overcurrent Protection	Fine as is

CMP-10 TG-4 Review of Overcurrent Language for the Articles undeer the purview of CMP-15			
CMP	NEC Section (using First Draft of 2026 NEC)	Current Language	"New" Language
15	Article 100		
	Bull Switch	Overcurrent protection	Fine as is
15	Article 517		
	517.17(B)	Overcurrent protective devices	OCPDs
	517.31(G). (X5)	Overcurrent protective devices	OCPDs
	517.31(G)	Overcurrent	Fine as is
	517.33((C). (X5)	Overcurrent protective devices	OCPDs
	517.42(F)	Overcurrent protective devices	OCPDs
	517.42(F)	Overcurrent	Fine as is
	517.73	Overcurrent Protection	Fine as is
	517.73(A)	Overcurrent protective devices	OCPDs
	517.73(B)	Overcurrent protective devices	OCPDs
	517.73(B)	Overcurrent Protection	Fine as is
	517.74(B)	Overcurrent protective devices	OCPDs
	517.160(A)(2)	Overcurrent Protection	Fine as is
	517.160(A)(2)	Overcurrent protective device	OCPD
	517.160(A)(2)	be protected against Overcurrent	be provided with overcurrent protection
	517.160(A)(3)	Overcurrent protective devices	OCPDs
	517.160(B)(1)	Overcurrent protective devices	OCPDs
15	Article 518		
	518.7(A)(1)	Overcurrent Protection	Fine as is
	518.17(A)(1) and (2)	Overcurrent Devices	OCPDs
15	Article 520		
	520.9	Branch Circuit Overcurrent Device	OCPD
	520.21	Overcurrent protective devices	OCPDs
	520.25. (X3)	Overcurrent Protection	Fine as is
	520.26	Overcurrent protective devices	OCPD
	520.26. (X3)	Overcurrent Protection	Fine as is
	520.27. (X2)	Overcurrent Device	OCPD
	520.44-T	Overcurrent Devices	OCPD
	520.50(C)	Overcurrent Protection	Fine as is
	520.50.	Branch-circuit overcurrent protective device	OCPDs
	520.52	Overcurrent Protection	Fine as is

	520.53(A)	Overcurrent protective devices	OCPDs
	520.53(D)	Overcurrent Protection	Fine as is
	520.54	Overcurrent Devices	OCPDs
	520.54(D)	Overcurrent Device	OCPD
	520.54(D)(1) and (2)	Overcurrent protective devices	OCPD
	520.54(E)	Overcurrent protective device	OCPD
	520.54(E). (X4)	Overcurrent protection device	OCPD
	520.54(E)	Overcurrent Devices	OCPDs
	520.54(K)	Overcurrent Device	OCPD
	520.68	Overcurrent protective device	OCPD
	520.68(3)	Overcurrent Device	OCPD
	520.68(4)	Overcurrent protective device	OCPD
	520.68(6)	Overcurrent Devices	OCPDs
	520.68(C)	Overcurrent Protection	Fine as is
15	**Article 522**		
	522.10(A)(2). (X3)	Overcurrent Devices	OCPDs
	522.10(A)(2	Overcurrent protective device	OCPD
	522.10(B). (X4)	Overcurrent Devices	OCPDs
	522.23. (X3)	Overcurrent Protection	Fine as is
15	**Article 525**		
	525.12	Overcurrent Device	OCPD
	525.23(B)	Overcurrent Device	OCPD
	525.23(C). (X2)	Overcurrent Protection	Fine as is
15	**Article 530**		
	530.9(A)	Branch-circuit overcurrent device	Branch-circuit OCPD
	530.10(C)	Overcurrent Protection	Fine as is
	530.23 and (A)	Overcurrent Protection	Fine as is
	530.23(B)	Overcurrent protective devices	OCPDs
	530.23(D)	Overcurrent Protection	Fine as is
	530.42	Overcurrent Protection	Fine as is
15	**Article 540**		
	540.11(B)	Overcurrent Devices	OCPDs

CMP-10 TG-4 Review of Overcurrent Language for the Articles undeer the purview of CMP-16			
CMP	**NEC Section (using First Draft of 2026 NEC)**	**Current Language**	**"New" Language**
16	**Article 830**		
	830.15. (X4)	Overcurrent Protection	Fine as is

CMP-10 TG-4 Review of Overcurrent Language for the Articles undeer the purview of CMP-17			
CMP	**NEC Section (using First Draft of 2026 NEC)**	**Current Language**	**"New" Language**
17	**Article 422**		
	422.5(C)	Branch-circuit overcurrent protective device	Branch-Circuit OCPD
	422.11. Title	Overcurrent Protection	Fine as is
	422.11	protected against overcurrent	shall be provided with overcurrent protection
	422.11(A)	Overcurrent Protection	Fine as is
	422.11(A)	Branch-circuit overcurrent protective device	Branch-Circuit OCPD
	422.11(B)	Overcurrent Protection	OCPDs
	422.11(C)	Overcurrent Protection	OCPDs
	422.11(D)	Overcurrent protective devices	OCPDs
	422.11(E)	Overcurrent Protection	Fine as is
	422.11(E)(1)	Overcurrent Protection	Fine as is
	422.11(E)(2)	Overcurrent Protection	Fine as is
	422.11(E)(3)	Overcurrent Protection	OCPD
	422.11(E)(3)	Overcurrent Device	OCPD
	422.11(F)(1)	Supplementary Overcurrent Protective Devices	Supplementary OCPDs
	422.11(F)(1)	Overcurrent Protective Devices	OCPDs
	422.11(G)	Overcurrent Protective Devices	OCPDs
	422.13	Overcurrent Protection	Fine as is
	422.31(A)	Branch-circuit overcurrent protective device	Branch-Circuit OCPD
	422.60(A)	Overcurrent Protection	Fine as is
	422.62(B)(1). (X2)	Overcurrent protective device	OCPD
17	**Article 424**		
	424.19	Supplementary Overcurrent Protective Devices	Supplementary OCPDs
	424.19(A)	Supplementary Overcurrent Protection	Fine as is
	424.19(A)	Supplementary Overcurrent Protection	Fine as is
	424.19(A)	Supplementary Overcurrent Protective Device(s)	Supplementary OCPDs
	424.19(B)	Supplementary Overcurrent Protection	Fine as is
	424.22	Overcurrent Protection	Fine as is
	424.22(A)	Overcurrent Protection	Fine as is
	424.22(A)	protected against overcurrent	"..shall be permitted to have overcurrent protection.."
	424.22(B)	Supplementary Overcurrent Protective Device	Supplementary OCPD
	424.22(C). Title	Overcurrent Protective Devices	Fine as is
	424.22(C)	Supplementary Overcurrent Protective Devices	Supplementary OCPDs

	424.22(C)	Overcurrent Protection	Fine as is
	424.22(C)	Supplementary Overcurrent Protection	Fine as is
	424.22(D) (X2)	Supplementary Overcurrent Protective Devices	Supplementary OCPDs
	424.22(E). (X3)	Supplementary Overcurrent Protective Devices	Supplementary OCPDs
	424.72	Overcurrent Protection	Fine as is
	424.72(A)	Overcurrent protective device	OCPD
	424.72(B)	Overcurrent protective device	OCPD
	424.72(C). Title	Supplementary Overcurrent Protective Devices	Fine as is
	424.72(C)	Supplementary Overcurrent Protective Devices	Supplementary OCPDs
	424.72(C)	Overcurrent Protection	Fine as is
	424.72(D). Title	Supplementary Overcurrent Protective Devices	Fine as is
	424.72(D).	Supplementary Overcurrent Protective Devices	Supplementary OCPDs
	424.72(D)	Overcurrent protective device	OCPD
	424.72(E)	Supplementary Overcurrent Protective Devices. (X3)	Supplementary OCPDs
	424.82	Overcurrent protective devices	OCPDs
17	**Article 425**		
	425.19	Supplementary Overcurrent Protective Devices	Supplementary OCPDs
	425.19(A). (X2)	Supplementary Overcurrent Protection	Fine as is
	425.19(A)	Supplementary Overcurrent Protective Devices	Supplementary OCPDs
	425.19(B)	Supplementary Overcurrent Protection	Fine as is
	425.22. Title	Overcurrent Protection	Fine as is
	425.22(A)	Overcurrent Protection	Fine as is
	425.22(A)	protected against overcurrent	"..shall be permitted to have overcurrent protection.."
	425.22(B)	Supplementary Overcurrent Protective Device	Supplementary OCPD
	425.22(C). Title	Overcurrent Protective Devices	Fine as is
	425.22(C)	Supplementary Overcurrent Protective Devices	Supplementary OCPDs
	425.22(C). (X2)	Supplementary Overcurrent Protection	Fine as is
	425.22(D). Title	Supplementary Overcurrent Protective Devices	Fine as is
	425.22(D). (X2)	Supplementary Overcurrent Protective Devices	Supplementary OCPDs
	425.22(E) (X3)	Supplementary Overcurrent Protective Devices	Supplementary OCPDs
	425.72	Overcurrent Protection	Fine as is
	425.72(A)	Overcurrent protective device	OCPD
	425.72(B)	Overcurrent protective device	OCPD
	425.72(C). Title	Supplementary Overcurrent Protective Devices	Fine as is
	425.72(C)	Supplementary Overcurrent Protective Devices	Supplementary OCPDs

	425.72(C)	Overcurrent Protection	Fine as is
	425.72(D)	Overcurrent protection	Fine as is
	425.72(E). Title	Supplementary Overcurrent Protective Devices	Fine as is
	425.72(E)	Supplementary Overcurrent Protective Devices	Supplementary OCPDs
	425.72(E)	Overcurrent Protective Devices	OCPD
	425.72(F). (X3)	Supplementary Overcurrent Protective Devices	Supplementary OCPDs
	425.82	Overcurrent protective devices	OCPDs
17	**Article 427**		
	427.57	Overcurrent Protection	Fine as is
	427.57	considered protected against Overcurrent	considered to have overcurrent protection
17	**Article 680**		
	680.10.(A)& (B)(2)	Overcurrent protective devices	OCPDs
	680.23(F)(2)	Overcurrent Protection	Fine as is

CMP-10 TG-4 Review of Overcurrent Language for the Articles undeer the purview of CMP-18			
CMP	**NEC Section (using First Draft of 2026 NEC)**	**Current Language**	**"New" Language**
18	**Article 393**		
	393.45. Title	Overcurrent ..... Protection	Overcurrent Protection ....
	393.45(A)	Overcurrent Protection	Fine as is
18	**Article 406**		
	406.46(F)	Overcurrent Device	OCPD
18	**Article 410**		
	410.59(A)	Branch-circuit overcurrent devices	Branch-Circuit OCPD
	410.153	Overcurrent Protection	Fine as is
18	**Article 600**		
	600.41	Overcurrent	CMP to Review

Public Comment No. 542-NFPA 70-2024 [Global Input]

The Correlating Committee directs the CMPs to review all references to requirements in Chapters 7 & 8 for accuracy in light of the relocation of requirements occurring in the First Draft.

Additional Proposed Changes

File Name	Description	Approved
CN_401.pdf		

Statement of Problem and Substantiation for Public Comment

NOTE: The following CC Note No. 401 appeared in the First Draft Report.

The Correlating Committee directs the CMPs to review all references to requirements in Chapters 7 & 8 for accuracy in light of the relocation of requirements occurring in the First Draft.

Related Item

- Correlating Committee Note No. 401

Submitter Information Verification

Submitter Full Name: CC Notes
Organization: NEC Correlating Committee
Street Address:
City:
State:
Zip:

Submittal Date: Tue Jul 30 23:39:04 EDT 2024
Committee: NEC-P03

Correlating Committee Note No. 401-NFPA 70-2024 [Global Input]

Submitter Information Verification

Committee: NEC-AAC
Submittal Date: Fri May 10 12:35:51 EDT 2024

Committee Statement

Committee Statement: The Correlating Committee directs the CMPs to review all references to requirements in Chapters 7 & 8 for accuracy in light of the relocation of requirements occurring in the First Draft.

Ballot Results

✔ **This item has passed ballot**

12 Eligible Voters
1 Not Returned
11 Affirmative All
0 Affirmative with Comments
0 Negative with Comments
0 Abstention

Not Returned

McDaniel, Roger D.

Affirmative All

Ayer, Lawrence S.
Bowmer, Trevor N.
Hickman, Palmer L.
Holub, Richard A.
Jackson, Peter D.
Kendall, David H.
Manche, Alan
Osborne, Robert D.
Porter, Christine T.
Schultheis, Timothy James
Williams, David A.

Public Comment No. 482-NFPA 70-2024 [Definition: Cable Tie Fixing Device.]

Cable Tie Fixing Device.

A component, such as a block or bracket, specifically designed to secure cable tie(s) to a mounting surface.

Informational Note: The following are cable tie and cable tie fixing device type designations:

(1) Type(s) 1, 11, 2, 21, 2S, or 21S are evaluated for use in cable management applications.

(2) Type(s) 2S or 21S are also evaluated for securing and supporting cable, flexible conduit, and flexible tubing.

Additional Proposed Changes

File Name	Description	Approved
CN_129.pdf		

Statement of Problem and Substantiation for Public Comment

NOTE: The following CC Note No. 129 appeared in the First Draft Report on First Revision No. 8963.

The Correlating Committee directs CMP-3 to review the definition of “Cable Tie Fixing Device” and consider the need for the term because it is not used in the code.

Related Item

• First Revision No. 8963

Submitter Information Verification

Submitter Full Name: CC Notes
Organization: NEC Correlating Committee
Street Address:
City:
State:
Zip:

Submittal Date: Tue Jul 30 19:40:08 EDT 2024
Committee: NEC-P03

Correlating Committee Note No. 129-NFPA 70-2024 [Definition: Cable Tie Fixing Device.]

Submitter Information Verification

Committee: NEC-AAC
Submittal Date: Wed May 08 15:07:50 EDT 2024

Committee Statement

Committee Statement: The Correlating Committee directs CMP-3 to review the definition of “Cable Tie Fixing Device” and consider the need for the term because it is not used in the code.

First Revision No. 8963-NFPA 70-2024 [New Definition after Definition: Cable Termination.]

Ballot Results

✔ **This item has passed ballot**

12 Eligible Voters
1 Not Returned
11 Affirmative All
0 Affirmative with Comments
0 Negative with Comments
0 Abstention

Not Returned

McDaniel, Roger D.

Affirmative All

Ayer, Lawrence S.
Bowmer, Trevor N.
Hickman, Palmer L.
Holub, Richard A.
Jackson, Peter D.
Kendall, David H.
Manche, Alan
Osborne, Robert D.
Porter, Christine T.
Schultheis, Timothy James
Williams, David A.

Public Comment No. 483-NFPA 70-2024 [Definition: Cable Tie Integral Device.]

Cable Tie Integral Device.

A single component, as produced, incorporating a cable tie and a cable tie fixing device that are not separable.

Note: The following are cable tie and cable tie fixing device type designations:

(1) Type(s) 1, 11, 2, 21, 2S, or 21S are evaluated for use in cable management applications.

(2) Type(s) 2S or 21S are also evaluated for securing and supporting cable, flexible conduit, and flexible tubing.

Additional Proposed Changes

File Name	Description	Approved
CN_130.pdf		

Statement of Problem and Substantiation for Public Comment

NOTE: The following CC Note No. 130 appeared in the First Draft Report on First Revision No. 8966.

The Correlating Committee directs CMP-3 to review the definition of “Cable Tie Integral Device” and consider the need for the term because it is not used in the code.

Related Item

- First Revision No. 8966

Submitter Information Verification

Submitter Full Name: CC Notes
Organization: NEC Correlating Committee
Street Address:
City:
State:
Zip:

Submittal Date: Tue Jul 30 19:41:16 EDT 2024
Committee: NEC-P03

Correlating Committee Note No. 130-NFPA 70-2024 [Definition: Cable Tie Integral Device.]

Submitter Information Verification

Committee: NEC-AAC
Submittal Date: Wed May 08 15:09:19 EDT 2024

Committee Statement

Committee Statement: The Correlating Committee directs CMP-3 to review the definition of “Cable Tie Integral Device” and consider the need for the term because it is not used in the code.

First Revision No. 8966-NFPA 70-2024 [New Definition after Definition: Cable Termination.]

Ballot Results

✔ **This item has passed ballot**

12 Eligible Voters
1 Not Returned
11 Affirmative All
0 Affirmative with Comments
0 Negative with Comments
0 Abstention

Not Returned

McDaniel, Roger D.

Affirmative All

Ayer, Lawrence S.
Bowmer, Trevor N.
Hickman, Palmer L.
Holub, Richard A.
Jackson, Peter D.
Kendall, David H.
Manche, Alan
Osborne, Robert D.
Porter, Christine T.
Schultheis, Timothy James
Williams, David A.

Public Comment No. 485-NFPA 70-2024 [Definition: Circuit, Power-Limited. (Power-Limited Circuit)]

Circuit, Power-Limited. (Power-Limited Circuit)

An electrical circuit that is designed to provide acceptable protection from fire initiation and electrical shock by limiting the amount of power delivered into a fault by the power supply. (CMP-3)

Additional Proposed Changes

File Name	Description	Approved
CN_132.pdf		

Statement of Problem and Substantiation for Public Comment

NOTE: The following CC Note No. 132 appeared in the First Draft Report on First Revision No. 8254.

The Correlating Committee directs CMP-3 to review the definition “Circuit, Power-Limited”. The word “acceptable” is considered vague and unenforceable, see the NEC Style Manual Table 3.2.1.

Related Item

- First Revision No. 8254

Submitter Information Verification

Submitter Full Name: CC Notes
Organization: NEC Correlating Committee
Street Address:
City:
State:
Zip:

Submittal Date: Tue Jul 30 19:44:25 EDT 2024
Committee: NEC-P03

Correlating Committee Note No. 132-NFPA 70-2024 [Definition: Circuit, Power-Limited. (Power-Limited Circuit)]

Submitter Information Verification

Committee: NEC-AAC
Submittal Date: Wed May 08 15:12:28 EDT 2024

Committee Statement

Committee Statement: The Correlating Committee directs CMP-3 to review the definition “Circuit, Power-Limited”. The word “acceptable” is considered vague and unenforceable, see the NEC Style Manual Table 3.2.1.

First Revision No. 8254-NFPA 70-2024 [New Definition after Definition: Circuit Breaker.]

Ballot Results

✔ **This item has passed ballot**

12 Eligible Voters
1 Not Returned
11 Affirmative All
0 Affirmative with Comments
0 Negative with Comments
0 Abstention

Not Returned

McDaniel, Roger D.

Affirmative All

Ayer, Lawrence S.
Bowmer, Trevor N.
Hickman, Palmer L.
Holub, Richard A.
Jackson, Peter D.
Kendall, David H.
Manche, Alan
Osborne, Robert D.
Porter, Christine T.
Schultheis, Timothy James
Williams, David A.

Public Comment No. 1370-NFPA 70-2024 [Definition: Limited-Energy System.]

Limited-Energy System.

The equipment and cables of an end-to-end system that are either power-restricted- ~~to ensure the energy delivered into any fault provides acceptable protection for fire prevention and electric shock~~ , or capable of limiting or shutting down the power source to prevent deviations above normal operating limits to mitigate hazards related to electric shock and fire . (CMP-3)

Informational Note: Examples of limited-energy systems include Class 2, Class 3, Class 4, Power-Limited Fire Alarm (PLFA), and Communications Systems.

Additional Proposed Changes

File Name	Description	Approved
Limited_Energy_Roster-2026_2nd_Draft.pdf	Limited-Energy Task Group Roster-2nd Draft	

Statement of Problem and Substantiation for Public Comment

This public comment is submitted on behalf of the Limited-Energy Task Group (see attached roster) modify the definition of Limited-Energy Systems to more accurately define what a limited-energy system is and how it operates. Removing terms that could be considered subjective like acceptable, provide a clearer definition. This new language also appropriately includes communications systems as these systems also qualify as a limited-energy system.

Related Public Comments for This Document

Related Comment	Relationship
Public Comment No. 945-NFPA 70-2024 [Section No. 750.1]	
Public Comment No. 974-NFPA 70-2024 [Section No. 742.1]	
Public Comment No. 1372-NFPA 70-2024 [Section No. 720.1]	
Public Comment No. 1373-NFPA 70-2024 [Section No. 721.1]	
Public Comment No. 1374-NFPA 70-2024 [Section No. 110.26(A)(1)]	

Related Item

- FCR-221

Submitter Information Verification

Submitter Full Name: Kyle Krueger
Organization: NECA
Affiliation: NECA
Street Address:
City:
State:
Zip:

Submittal Date: Wed Aug 21 15:33:19 EDT 2024
Committee: NEC-P03

Limited Energy Task Group [2nd Draft]					
No.	First Name	Last Name	Class.	Organization	Other Committees
1	Kyle	Krueger	[I/M]	NECA	NEC-Correlating Comittee CMP 3 NFPA 72-Correlating Committee
2	Ernie	Gallo	[U/T]	NEBScore	
3	Derrick	Atkins	[L]	Minneapolis Electrical JA	NEC-Correlating Committee CMP 5
4	Anthony	Tassone	[R/T]	UL Solutions	CMP 3 CMP 16
5	Chad	Jones	[M]	Cisco	CMP 3
6	Sam	Rokowski	[I/M]	Maddox Inc.	CMP 3
7	George	Bish	[M]	Amazon/Ring Protect Inc	CMP 16
8	Trevor	Bowmer	[U]	Telecom Consulting	NEC Correlating Committee CMP 16
9	Ronald	Tellas	[M]	CCCA	CMP 3 CMP 16
10	Tim	Mikloiche	[E]	IAEI	CMP 3
11	Ryan	Jackosn	[M]	Steel Tube Industry	CMP 3
12	Diana	Lettkeman	[M]	Dish	CMP 16
13	John	Kacperski	[L]	IBEW	CMP 16

Public Comment No. 1296-NFPA 70-2024 [Definition: Wire.]

Wire (as applied to limited-energy systems) .

A factory assembly of one or more insulated conductors without an overall covering. (~~805) (~~ CMP-3)

Statement of Problem and Substantiation for Public Comment

Changes to Chapters 7&8 have made it neccesary to expand the definition to beyond Article 805, but not expanded throughout the NEC. This term (as of this writing) is used in Article 720 and 722.

Related Item

- FCR 221

Submitter Information Verification

Submitter Full Name: Ryan Jackson
Organization: Self-employed
Street Address:
City:
State:
Zip:

Submittal Date: Tue Aug 20 12:25:05 EDT 2024
Committee: NEC-P03

Public Comment No. 1371-NFPA 70-2024 [New Definition after Definition: Cable Joint.]

Cable, Limited-Energy ***(Limited-Energy Cable).***
A factory assembly of one or more conductors or optical fibers used for the following circuits and systems:
(1) Class 2 Circuits
(2) Class 3 Circuits
(3) Class 4 Circuits and Systems
(4) Optical Fiber Systems
(5) Communications Circuits
(6) Community Antenna Television Circuits (CATV)
(7) Network-Powered Broadband Low-Power Communications Circuits
(8) Premises Communications Circuits and Systems
(9) Power-Limited Fire Alarm (PLFA) Circuits
(CMP-3)

Additional Proposed Changes

File Name	Description	Approved
Limited_Energy_Roster-2026_2nd_Draft.pdf	Limited-Energy Task Group Roster-2nd Draft	

Statement of Problem and Substantiation for Public Comment

This public comment is submitted on behalf of the Limited-Energy Task Group (see attached roster) to create a new definition for Cable, Limited-Energy (Limited-Energy Cable) to provide an all-encompassing defined term to clearly establish requirements and scopes for limited-energy articles.

Related Public Comments for This Document

Related Comment	Relationship
Public Comment No. 935-NFPA 70-2024 [Section No. 722.14]	
Public Comment No. 974-NFPA 70-2024 [Section No. 742.1]	
Public Comment No. 1316-NFPA 70-2024 [Section No. 722.1]	
Public Comment No. 1369-NFPA 70-2024 [Section No. 722.131(A)]	
Public Comment No. 1502-NFPA 70-2024 [Section No. 720.5(A)]	
Public Comment No. 1506-NFPA 70-2024 [Section No. 720.5(B)]	
Public Comment No. 1507-NFPA 70-2024 [Section No. 720.5(C)]	
Public Comment No. 1508-NFPA 70-2024 [Section No. 720.5(D)]	
Public Comment No. 1512-NFPA 70-2024 [Section No. 720.6]	
Public Comment No. 1514-NFPA 70-2024 [Section No. 720.7 [Excluding any Sub-Sections]]	
Public Comment No. 1515-NFPA 70-2024 [Section No. 720.10]	
Public Comment No. 1516-NFPA 70-2024 [Section No. 720.11]	
Public Comment No. 1519-NFPA 70-2024 [Section No. 720.14(B)]	
Public Comment No. 1521-NFPA 70-2024 [Section No. 720.19]	
Public Comment No. 1522-NFPA 70-2024 [Section No. 720.21]	
Public Comment No. 1524-NFPA 70-2024 [Section No. 720.22]	
Public Comment No. 1525-NFPA 70-2024 [Section No. 720.27]	
Public Comment No. 1527-NFPA 70-2024 [Section No. 720.30]	

Related Item

- FCR-238

Submitter Information Verification

Submitter Full Name: Kyle Krueger
Organization: NECA
Affiliation: NECA
Street Address:
City:
State:
Zip:

Submittal Date: Wed Aug 21 15:38:34 EDT 2024
Committee: NEC-P03

Limited Energy Task Group [2nd Draft]					
No.	First Name	Last Name	Class.	Organization	Other Committees
1	Kyle	Krueger	[I/M]	NECA	NEC-Correlating Comittee CMP 3 NFPA 72-Correlating Committee
2	Ernie	Gallo	[U/T]	NEBScore	
3	Derrick	Atkins	[L]	Minneapolis Electrical JA	NEC-Correlating Committee CMP 5
4	Anthony	Tassone	[R/T]	UL Solutions	CMP 3 CMP 16
5	Chad	Jones	[M]	Cisco	CMP 3
6	Sam	Rokowski	[I/M]	Maddox Inc.	CMP 3
7	George	Bish	[M]	Amazon/Ring Protect Inc	CMP 16
8	Trevor	Bowmer	[U]	Telecom Consulting	NEC Correlating Committee CMP 16
9	Ronald	Tellas	[M]	CCCA	CMP 3 CMP 16
10	Tim	Mikloiche	[E]	IAEI	CMP 3
11	Ryan	Jackosn	[M]	Steel Tube Industry	CMP 3
12	Diana	Lettkeman	[M]	Dish	CMP 16
13	John	Kacperski	[L]	IBEW	CMP 16

Public Comment No. 724-NFPA 70-2024 [New Definition after Definition: Cable, Integrated Gas Spac...]

Cable, Limited-Energy. (Limited-Energy Cable) Optical fiber cables and cabling used in Class 2 circuits, Class 3 circuits, Class 4 circuits, communications systems, community antenna television and radio distribution systems, network-powered broadband communications low-power systems, premises-powered broadband communications systems, and power-limited fire alarm systems.

Statement of Problem and Substantiation for Public Comment

A definition of limited-energy cable is needed for use with Article 722.

Related Item

- Global FCR-238

Submitter Information Verification

Submitter Full Name: Stanley Kaufman
Organization: CableSafe, Inc./OFS
Street Address:
City:
State:
Zip:

Submittal Date: Sun Aug 04 11:07:07 EDT 2024
Committee: NEC-P03

Public Comment No. 838-NFPA 70-2024 [New Definition after Definition: Cable, Integrated Gas Spac...]

Cable, Limited-Energy. (Limited-Energy Cable) Optical fiber cables and cabling used in Class 2 circuits, Class 3 circuits, Class 4 circuits, communications systems, antenna systems, community antenna television and radio distribution systems, network-powered broadband communications low-power systems, premises-powered broadband communications systems, and power-limited fire alarm systems.

Statement of Problem and Substantiation for Public Comment

A definition of limited-energy cable is needed for use with Article 722.

When developing a definition of limited-energy cable, it is informative to review which cables are permitted in the same pathway without any separation.

Article 725

725.139(E) Class 2 or Class 3 Cables with Other Circuit Cables. Jacketed cables of Class 2 or Class 3 circuits shall be permitted in the same enclosure, cable tray, raceway, or cable routing assembly with jacketed cables of any of the following:

(1) Power-limited fire alarm systems in compliance with Parts I and III of Article 760

(2) Nonconductive and conductive optical fiber cables in compliance with Parts I and IV of Article 770

(3) Communications circuits in compliance with Parts I and IV of Article 805

(4) Community antenna television and radio distribution systems in compliance with Parts I and IV of Article 820

(5) Low-power, network-powered broadband communications in compliance with Parts I and IV of Article 830
Article 760

Article 726
726.139 Installation of Conductors of Different Circuits in the Same Cable, Enclosure, Cable Tray, Raceway, or Cable Routing Assembly.
(A) Two or More Class 4 Circuits. Conductors of two or more Class 4 circuits shall be permitted within the same cable, enclosure, raceway, or cable routing assembly.
(B) Class 4 Circuits With Class 2, Class 3, or Communications Circuits. Conductors of one or more Class 4 circuits shall be permitted within the same cable assembly as conductors of Class 2, Class 3, or communications circuits if the insulation of the Class 2, Class 3, or communications circuit conductors in the cable is at least that required for Class 4 circuits. Class 4 cables shall be permitted within the same enclosure, raceway, or cable routing assembly as Class 2, Class 3, or communications circuits.
(C) Class 4 Cables With Other Circuit Cables. Jacketed cables of Class 4 circuits shall be permitted in the same enclosure, cable tray, raceway, or cable routing assembly with jacketed cables of any of the following:
(1) Power-limited fire alarm systems in compliance with Article 760, Parts I and III
(2) Nonconductive and conductive optical fiber cables in compliance with Article 770, Parts I and IV
(3) Communications circuits in compliance with Article 805, Parts I and IV
(4) Community antenna television and radio distribution systems in compliance with Article 820, Parts I and IV
(5) Low-power, network-powered broadband communications in compliance with Article 830, Parts I and IV

Article 760

760.139 Installation of Conductors of Different PLFA Circuits, Class 2, Class 3, and Communications Circuits in the Same Cable, Enclosure, Cable Tray, Raceway, or Cable Routing Assembly.

760.139(A) Two or More PLFA Circuits. Cable and conductors of two or more power-limited fire alarm circuits shall be permitted within the same cable, enclosure, cable tray, raceway, or cable routing assembly.

760.139(B) Class 2 Circuits with PLFA Circuits. Conductors of one or more Class 2 circuits shall be permitted within the same cable, enclosure, cable tray, raceway, or cable routing assembly with conductors of power-limited fire alarm circuits if the insulation of the Class 2 circuit conductors in the cable, enclosure, raceway, or cable routing assembly is at least that required by the power-limited fire alarm circuits.

760.139(C) Class 3 and Communications Circuits with PLFA Circuits. Cable and conductors of Class 3 and communications circuits shall be permitted within the same cable, enclosure, cable tray, raceway, or cable routing assembly with cables and conductors of power-limited fire alarm circuits.

760.139(D) Low-Power Network-Powered Broadband Communications Cables and PLFA Cables. Low-power network-powered broadband communications circuits shall be permitted in the same enclosure, cable tray, raceway, or cable routing assembly with PLFA cables.

760.139(E) Audio System Circuits and PLFA Circuits. Audio system circuits described in 640.9(C) and installed using Class 2 or Class 3 wiring methods in compliance with 722.135 shall not be installed in the same cable, cable tray, raceway, or cable routing assembly with power-limited conductors or cables.

Article 770

770.133(C) With Other Circuits. Conductive and nonconductive optical fiber cables shall be permitted in the same raceway, cable tray, box, enclosure, or cable routing assembly, with conductors of any of the following:

(1) Class 2 and Class 3 remote-control, signaling, and power-limited circuits in compliance with 645.5(E)(2) or Parts I and II of Article 725

(2) Power-limited fire alarm systems in compliance with Parts I and III of Article 760

(3) Communications circuits in compliance with Parts I and V of Article 805

(4) Community antenna television and radio distribution systems in compliance with Parts I and V of Article 820

(5) Low-power network-powered broadband communications circuits in compliance with Parts I and V of Article 830
Article 800

800.133(A)(1) Other Circuits. Communications cables and CATV-type coaxial cables shall be permitted in the same raceway, cable tray, box, enclosure, or cable routing assembly together and with jacketed cables of any of the following:

(1) Class 2 and Class 3 remote-control, signaling, and power-limited circuits in compliance with 645.5(E)(2) or Parts I and II of Article 725

(2) Power-limited fire alarm systems in compliance with Parts I and III of Article 760

(3) Nonconductive and conductive optical fiber cables in compliance with Parts I and V of Article 770

(4) Communications circuits in compliance with Parts I and IV of Articles 800 and 805

(5) Community antenna television and radio distribution systems in compliance with Parts I and V of Articles 800 and 820

(6) Low-power network-powered broadband communications circuits in compliance with Parts I and V of Articles 800 and 830

Article 830

830.133(A)(1) In Raceways, Cable Trays, Boxes, Enclosures, and Cable Routing Assemblies.

(a) Low- and Medium-Power Network-Powered Broadband Communications Circuit Cables. Low- and medium-power network-powered broadband communications cables shall be permitted in the same raceway, cable tray, box, enclosure, or cable routing assembly.

(b) Low-Power Network-Powered Broadband Communications Circuit Cables with Other Circuits. Low-power network-powered broadband communications cables shall be permitted in the same raceway, cable tray, box, enclosure, or cable routing assembly with jacketed cables of any of the following circuits:

(1) Class 2 and Class 3 remote-control, signaling, and power-limited circuits in compliance with Parts I and II of Article 725

(2) Power-limited fire alarm systems in compliance with Parts I and III of Article 760

(3) Communications circuits in compliance with Parts I and IV of Article 805

(4) Nonconductive and conductive optical fiber cables in compliance with Parts I and V of Article 770

(5) Community antenna television and radio distribution systems in compliance with Parts I and V of Article 820

(c) Medium-Power Network-Powered Broadband Communications Circuit Cables with Optical Fiber Cables and Other Communications Cables. Medium-power network-powered broadband communications cables shall not be permitted in the same raceway, cable tray, box, enclosure, or cable routing assembly with conductors of any of the following circuits:

(1) Communications circuits in compliance with Parts I and IV of Article 805

(2) Conductive optical fiber cables in compliance with Parts I and V of Article 770

(3) Community antenna television and radio distribution systems in compliance with Parts I and V of Article 820

(d) Medium-Power Network-Powered Broadband Communications Circuit Cables with Other Circuits. Medium-power network-powered broadband communications cables shall not be permitted in the same raceway, cable tray, box, enclosure, or cable routing assembly with conductors of any of the following circuits:

(1) Class 2 and Class 3 remote-control, signaling, and power-limited circuits in compliance with Parts I and II of Article 725

(2) Power-limited fire alarm systems in compliance with Parts I and III of Article 760

(e) Electric Light, Power, Class 1, Network-Powered Broadband Communications Circuit Cables. Network-powered broadband communications cable shall not be placed in any raceway, cable tray, compartment, outlet box, junction box, or similar fittings with conductors of electric light, power, Class 1, or non-power-limited fire alarm circuit cables.

Exception No. 1: Network-powered broadband communications cable shall be permitted to be placed in a raceway, cable tray, compartment, outlet box, junction box, or similar fittings with conductors of electric light, power, Class 1, or non-power-limited fire alarm circuit cables where all of the conductors of electric light, power, Class 1, non-power-limited fire alarm circuits are separated from all of the network-powered broadband communications cables by a permanent barrier or listed divider.

Exception No. 2: Where power circuit conductors in outlet boxes, junction boxes, or similar fittings or compartments where such conductors are introduced solely for power supply to the network-powered broadband communications system distribution equipment, the power circuit conductors shall be routed within the enclosure to maintain a minimum 6 mm (1⁄4 in.) separation from network-powered broadband communications cables.

What is the relevance of these installation rules to the definition of limited-energy cables?
Article 722 in the 2023 NEC includes Class 2, Class 3, Class 4 and power-limited fire alarm cables. All of these cables are permitted in the same pathway together along with communications cables, CATV-type coaxial cables and network-powered broadband communications low-power cables. On the other hand, these cables are separated from electric light, power Class1, non-power-limited fire alarm and network-powered broadband communications medium-power cables.

These separation rules can simply be stated by saying that the limited-energy cables are permitted in the same pathway but they must be separated from the high energy circuits. That leads defining limited-energy cables to include:
1. Class 2 and Class 3 power-limited circuit cables
2. power-limited tray cables
3. power-limited fire alarm (PLFA) circuit cables
4. Class 4 fault-managed power circuit cables
5. optical fiber cables
6. communications cables,
7. CATV-type coaxial cables
8. network-powered broadband communications low-power cables

It leads to excluding Class1, non-power-limited fire alarm and network-powered broadband communications medium-power cables from the definition of limited-energy cables.

The guiding principle in defining limited-energy cables is that the applications of these cables are low hazard, so they can occupy the same pathway, splices don't need to be contained in boxes and separation rules (for personnel safety) are not needed.

Class1, non-power-limited fire alarm and network-powered broadband communications medium-power cables are excluded from the definition of limited-energy cables because they are not inherently low-hazard and they require many safeguards to use them safely. Class 1 circuits are installed according to the installation rules for power circuits in 300.2 through 300.26. Non-power-limited fire alarm circuits are installed according to the installation rules for power circuits in 110.3(B), 300.7, 300.11, 300.15, 300.17, 300.19(B). Unlike any other communications cable, network-powered broadband communications medium-powered cable splices are required to be enclosed in a junction box.

Related Public Comments for This Document

Related Comment	Relationship

Public Comment No. 235-NFPA 70-2024 [Article 722] Simplifies scope of Article 722.

Public Comment No. 235-NFPA 70-2024 [Article 722]

Related Item

• Global FCR-238

Submitter Information Verification

Submitter Full Name: David Kiddoo

Organization: CCCA

Affiliation: Communications Cable & Connectivity Association

Street Address:

City:

State:

Zip:

Submittal Date: Tue Aug 06 13:10:55 EDT 2024

Committee: NEC-P03

Public Comment No. 1179-NFPA 70-2024 [Article 206]

~~Article 206~~ ~~Remote~~ **Article 206 Non-Power-Limited Remote Control and Signaling Circuits**

206.1 Scope .

This article provides the general requirements for ~~remote-control and signaling circuits.~~

~~**206.4** Circuit Classification.~~

~~Remote-control and signaling circuits shall be classified as either power-limited or~~

non-power

-

limited

~~and shall comply with 206.4(A) through 206.4(C) :~~

~~**(A)** Class 1 Power-Limited Remote-Control and Signaling Circuits.~~

~~Class 1 power-limited~~ remote-control and signaling circuits~~ shall comply with 724~~ . ~~30 through 724.52 ,~~ ~~790.4 through 790.24 , and 794.204 :~~

~~(B) Class 2 and Class 3~~

Informational note 1 See Article 724 for Class 1 Power-Limited Remote-Control and Signaling Circuits

-

Informational note 2 See Article 725 for Class 2 and Class 3 ~~power-limited remote-control and signaling circuits shall comply with 725.3 through 725.160.~~

~~(C) Non-~~

Power-Limited Remote-Control and Signaling Circuits

206 . 4 Installation

Non-power-limited remote-control and signaling circuits shall be installed in accordance with 300.4 through 300.25 and shall comply with 206.4(~~C)(1) through~~ A) through 206.4(~~C~~ D)~~(3)~~ :

(~~1~~ A) Sizes and Use.

(1) 18 AWG copper and 16 AWG copper or copper-clad aluminum conductors shall be permitted to supply loads that do not exceed the ampacities specified in 402.5 . They shall be installed in a raceway, enclosure, or listed cable.

(2) 14 AWG copper-clad aluminum conductors shall only be permitted in Type MC cable and Type TC cable. They shall only supply loads not exceeding 8 amperes.

(3) Conductors larger than 16 AWG copper or copper-clad aluminum shall not supply loads greater than the ampacities specified in 310.14 without applying the ampacity adjustment and correction factors specified in 310.15 to the ampacity calculation.

(4) Flexible cords shall comply with Article 400 , Parts I and II.

(~~2~~ B) Insulation.

(1) Conductor insulation shall be rated for the system voltage

~~and not less than 600 volts~~

.

(2) Conductors larger than 16 AWG copper or 14 AWG copper-clad aluminum shall comply with the applicable general requirements for conductors rated up to and including 2000 volts for type designations, insulations, markings, ampacity ratings, and uses in accordance with 310.3 , 310.4 , 310.6 , 310.8 , 310.10 , and 310.14 .

(3) Conductors that are 18 AWG copper, 16 AWG copper, or 14 AWG copper-clad aluminum shall be Type FFH-2, Type KF-2, Type KFF-2, Type PAF, Type PAFF, Type PF, Type PFF, Type PGF, Type PGFF, Type PTF, Type PTFF, Type RFH-2, Type RFHH-2, Type RFHH-3, Type SF-2, SFF-2, Type TF, Type TFF, Type TFFN, Type TFN, Type ZF, or Type ZFF.

- ~~Conductors with other types and thicknesses of insulation shall be permitted if suitable for Class 1 circuit use.~~

(~~3~~ (C) Non-Power-Limited Remote-Control and Signaling Circuits with Power-Supply Circuits.

Non-power-limited remote-control and signaling circuit conductors rated 1000 volts ac, 1500 volts dc, nominal or less and power-supply circuits shall be permitted to occupy the same cable, enclosure, or raceway without a barrier if all conductors have an insulation rating equal to at least the maximum circuit voltage applied to any conductor within the enclosure, cable, or raceway, and the equipment powered is functionally associated.

(D) Overcurrent Protection

Non-Power-Limited Remote Control and Signalling Circuit conductors shall be protected from overcurrent in accordance with 240.4 "Protection of Conductors" or 240.5 "Protection of Flexible Cords, Flexible Cables, and Fixture Wires".

Additional Proposed Changes

File Name	Description	Approved
Article_206_Word_version.doc	Word version of revision to Article 206	

Statement of Problem and Substantiation for Public Comment

Changes were made to make Article 206 apply only to Non-Power-Limited Remote Control and Signaling Circuits. I attached a Word version of the revisions to Article 206 because the Terra version is hard to read.

Related Item

- FR 8811

Submitter Information Verification

Submitter Full Name: Robert Jones
Organization: Independent Electrical Contrac
Street Address:
City:
State:
Zip:
Submittal Date: Fri Aug 16 13:05:32 EDT 2024
Committee: NEC-P03

Public Comment No. 1179-NFPA 70-2024 [Article 206]

Article 206 Non-Power-Limited Remote Control and Signaling Circuits

206.1 Scope. This article provides the general requirements for Non-Power-Limited Remote-Control and Signaling Circuits.

Informational note 1: See Article 724 for Class 1 Power-Limited Remote-Control and Signaling Circuit requirements.

Informational note 2: See Article 725 for Class 2 and Class 3 Power-Limited Remote-Control and Signaling Circuit requirements.

206.4 Installation. Non-power-limited remote-control and signaling circuits shall be installed in accordance with 300.4 through 300.25 and shall comply with 206.4(A) through 206.4(D).

(A) Sizes and Use.

(1) 18 AWG copper and 16 AWG copper or copper-clad aluminum conductors shall be permitted to supply loads that do not exceed the ampacities specified in 402.5. They shall be installed in a raceway, enclosure, or listed cable.

(2) 14 AWG copper-clad aluminum conductors shall only be permitted in Type MC cable and Type TC cable. They shall only supply loads not exceeding 8 amperes.

(3) Conductors larger than 16 AWG copper or copper-clad aluminum shall not supply loads greater than the ampacities specified in 310.14 without applying the ampacity adjustment and correction factors specified in 310.15 to the ampacity calculation.

(4) Flexible cords shall comply with Article 400, Parts I and II.

(B) Insulation.

(1) Conductor insulation shall be rated for the system voltage

(2) Conductors larger than 16 AWG copper or 14 AWG copper-clad aluminum shall comply with the applicable general requirements for conductors rated up to and including 2000 volts for type designations, insulations, markings, ampacity ratings, and uses in accordance with 310.3, 310.4, 310.6, 310.8, 310.10, and 310.14.

(3) Conductors that are 18 AWG copper, 16 AWG copper, or 14 AWG copper-clad aluminum shall be Type FFH-2, Type KF-2, Type KFF-2, Type PAF, Type PAFF, Type PF, Type PFF, Type PGF, Type PGFF, Type PTF, Type PTFF, Type RFH-2, Type RFHH-2, Type RFHH-3, Type SF-2, SFF-2, Type TF, Type TFF, Type TFFN, Type TFN, Type ZF, or Type ZFF.

(C) Non-Power-Limited Remote-Control and Signaling Circuits with Power-Supply Circuits.

Non-power-limited remote-control and signaling circuit conductors rated 1000 volts ac, 1500 volts dc, nominal or less and power-supply circuits shall be permitted to occupy the same cable, enclosure, or raceway without a barrier if all conductors have an insulation rating equal to at least the maximum circuit voltage applied to any conductor within the enclosure, cable, or raceway, and the equipment powered is functionally associated.

(D) Overcurrent Protection

Non-Power-Limited Remote Control and Signaling Circuit conductors shall be protected from overcurrent in accordance with 240.4 "Protection of Conductors" or 240.5 "Protection of Flexible Cords, Flexible Cables, and Fixture Wires".

Public Comment No. 298-NFPA 70-2024 [Article 206]

~~**Article 206** Remote-Control and Signaling Circuits~~

~~**206.1** Scope.~~

~~This article provides the general requirements for remote-control and signaling circuits.~~

~~**206.4** Circuit Classification.~~

~~Remote-control and signaling circuits shall be classified as either power-limited or non-power-limited and shall comply with 206.4(A) through 206.4(C) :~~

~~**(A)** Class 1 Power-Limited Remote-Control and Signaling Circuits.~~

~~Class 1 power-limited remote-control and signaling circuits shall comply with 724.30 through 724.52 , 790.4 through 790.24 , and 794.204 :~~

~~**(B)** Class 2 and Class 3 Power-Limited Remote-Control and Signaling Circuits.~~

~~Class 2 and Class 3 power-limited remote-control and signaling circuits shall comply with 725.3 through 725.160.~~

~~**(C)** Non-Power-Limited Remote-Control and Signaling Circuits.~~

~~Non-power-limited remote-control and signaling circuits shall be installed in accordance with 300.4 through 300.25 and shall comply with 206.4(C)(1) through 206.4(C)(3) :~~

~~**(1)** Sizes and Use.~~

(a) ~~18 AWG copper and 16 AWG copper or copper-clad aluminum conductors shall be permitted to supply loads that do not exceed the ampacities specified in 402.5 . They shall be installed in a raceway, enclosure, or listed cable.~~

(b) ~~14 AWG copper-clad aluminum conductors shall only be permitted in Type MC cable and Type TC cable. They shall only supply loads not exceeding 8 amperes.~~

(c) ~~Conductors larger than 16 AWG copper or copper-clad aluminum shall not supply loads greater than the ampacities specified in 310.14 without applying the ampacity adjustment and correction factors specified in 310.15 to the ampacity calculation.~~

(d) ~~Flexible cords shall comply with Article 400 , Parts I and II.~~

~~**(2)** Insulation.~~

(a) ~~Conductor insulation shall be rated for the system voltage and not less than 600 volts.~~

(b) ~~Conductors larger than 16 AWG copper or 14 AWG copper-clad aluminum shall comply with the applicable general requirements for conductors rated up to and including 2000 volts for type designations, insulations, markings, ampacity ratings, and uses in accordance with 310.3 , 310.4 , 310.6 , 310.8 , 310.10 , and 310.14 :~~

(c) ~~Conductors that are 18 AWG copper, 16 AWG copper, or 14 AWG copper-clad aluminum shall be Type FFH-2, Type KF-2, Type KFF-2, Type PAF, Type PAFF, Type PF, Type PFF, Type PGF, Type PGFF, Type PTF, Type PTFF, Type RFH-2, Type RFHH-2, Type RFHH-3, Type SF-2, SFF-2, Type TF, Type TFF, Type TFFN, Type TFN, Type ZF, or Type ZFF.~~

(d) ~~Conductors with other types and thicknesses of insulation shall be permitted if suitable for Class 1 circuit use.~~

~~**(3)** Non-Power-Limited Remote-Control and Signaling Circuits with Power-Supply Circuits.~~

~~Non-power-limited remote-control and signaling circuit conductors rated 1000 volts ac, 1500 volts dc, nominal or less and power-supply circuits shall be permitted to occupy the same cable, enclosure, or raceway without a barrier if all conductors have an insulation rating equal to at least the maximum circuit voltage applied to any conductor within the enclosure, cable, or raceway, and the equipment powered is functionally associated.~~

Statement of Problem and Substantiation for Public Comment

I do not see a need for this Article. We already have 722 for the Cables for Power Limited Circuits and Fault Managed Power Circuit, 724 for Power Limited Class 1 circuits, Article 725 for Power Limited Class 2 and 3 circuit, and 726 for Class 4 systems. All the article is doing is telling the user to go see other articles that actually cover the use of those conductors and power systems.

Class 1 Non-Power limited was basically removed in the 2023 code as it is just a regular wiring installation. 300.5(C)(1)(a) states the exact thing that is written in 206.4 (C)(1)(3) we should not have to repeat it.

206.4 (C)(2)(c) limits the conductors for 18 and 16 AWG to fixture wires. 420.12 does not allow these conductors to be used in other location unless permitted elsewhere in the code, which it now is here in Article 206. My thought is not many people are going to be looking for those insulations and will use the standard THHN, MTW, and the like.

Related Item

• FR8811

Submitter Information Verification

Submitter Full Name: Lowell Reith
Organization: Interstates, Inc.
Affiliation: IEC
Street Address:
City:
State:
Zip:

Submittal Date: Sun Jul 28 16:30:42 EDT 2024
Committee: NEC-P03

Public Comment No. 532-NFPA 70-2024 [Article 206]

Article 206 Remote-Control and Signaling Circuits

206.1 Scope.

This article provides the general requirements for remote-control and signaling circuits.

206.4 Circuit Classification.

Remote-control and signaling circuits shall be classified as either power-limited or non-power-limited and shall comply with 206.4(A) through 206.4(C).

(A) Class 1 Power-Limited Remote-Control and Signaling Circuits.

Class 1 power-limited remote-control and signaling circuits shall comply with 724.30 through 724.52, 790.4 through 790.24, and 794.204.

(B) Class 2 and Class 3 Power-Limited Remote-Control and Signaling Circuits.

Class 2 and Class 3 power-limited remote-control and signaling circuits shall comply with 725.3 through 725.160.

(C) Non-Power-Limited Remote-Control and Signaling Circuits.

Non-power-limited remote-control and signaling circuits shall be installed in accordance with 300.4 through 300.25 and shall comply with 206.4(C)(1) through 206.4(C)(3).

(1) Sizes and Use.

(a) 18 AWG copper and 16 AWG copper or copper-clad aluminum conductors shall be permitted to supply loads that do not exceed the ampacities specified in 402.5. They shall be installed in a raceway, enclosure, or listed cable.

(b) 14 AWG copper-clad aluminum conductors shall only be permitted in Type MC cable and Type TC cable. They shall only supply loads not exceeding 8 amperes.

(c) Conductors larger than 16 AWG copper or copper-clad aluminum shall not supply loads greater than the ampacities specified in 310.14 without applying the ampacity adjustment and correction factors specified in 310.15 to the ampacity calculation.

(d) Flexible cords shall comply with Article 400, Parts I and II.

(2) Insulation.

(a) Conductor insulation shall be rated for the system voltage and not less than 600 volts.

(b) Conductors larger than 16 AWG copper or 14 AWG copper-clad aluminum shall comply with the applicable general requirements for conductors rated up to and including 2000 volts for type designations, insulations, markings, ampacity ratings, and uses in accordance with 310.3, 310.4, 310.6, 310.8, 310.10, and 310.14.

(c) Conductors that are 18 AWG copper, 16 AWG copper, or 14 AWG copper-clad aluminum shall be Type FFH-2, Type KF-2, Type KFF-2, Type PAF, Type PAFF, Type PF, Type PFF, Type PGF, Type PGFF, Type PTF, Type PTFF, Type RFH-2, Type RFHH-2, Type RFHH-3, Type SF-2, SFF-2, Type TF, Type TFF, Type TFFN, Type TFN, Type ZF, or Type ZFF.

(d) Conductors with other types and thicknesses of insulation shall be permitted if suitable for Class 1 circuit use.

(3) Non-Power-Limited Remote-Control and Signaling Circuits with Power-Supply Circuits.

Non-power-limited remote-control and signaling circuit conductors rated 1000 volts ac, 1500 volts dc, nominal or less and power-supply circuits shall be permitted to occupy the same cable, enclosure, or raceway without a barrier if all conductors have an insulation rating equal to at least the maximum circuit voltage applied to any conductor within the enclosure, cable, or raceway, and the equipment powered is functionally associated.

Additional Proposed Changes

File Name	Description	Approved
CN_264.pdf		

Statement of Problem and Substantiation for Public Comment

NOTE: The following CC Note No. 264 appeared in the First Draft Report on First Revision No. 8811.

The Correlating Committee directs that a task group be formed consisting of members from CMPs 3 and 11 to review Article 206 and Class 1 non-power-limited/remote control and signaling circuits for the appropriate locations of the requirements covering these circuits.

Related Item

- First Revision No. 8811

Submitter Information Verification

Submitter Full Name: CC Notes
Organization: NEC Correlating Committee
Street Address:
City:
State:
Zip:

Submittal Date: Tue Jul 30 23:19:08 EDT 2024
Committee: NEC-P03

Correlating Committee Note No. 264-NFPA 70-2024 [Article 206]

Submitter Information Verification

Committee: NEC-AAC
Submittal Date: Thu May 09 17:48:43 EDT 2024

Committee Statement

Committee Statement: The Correlating Committee directs that a task group be formed consisting of members from CMPs 3 and 11 to review Article 206 and Class 1 non-power-limited/remote control and signaling circuits for the appropriate locations of the requirements covering these circuits.

First Revision No. 8811-NFPA 70-2024 [Global Input]

Ballot Results

✔ **This item has passed ballot**

12 Eligible Voters
1 Not Returned
11 Affirmative All
0 Affirmative with Comments
0 Negative with Comments
0 Abstention

Not Returned

McDaniel, Roger D.

Affirmative All

Ayer, Lawrence S.
Bowmer, Trevor N.
Hickman, Palmer L.
Holub, Richard A.
Jackson, Peter D.
Kendall, David H.
Manche, Alan
Osborne, Robert D.
Porter, Christine T.
Schultheis, Timothy James
Williams, David A.

Public Comment No. 1420-NFPA 70-2024 [Section No. 206.1]

206.1 Scope.

(A) Covered. This article provides the general requirements for remote-control and signaling circuits.

(B) Not Covered. Motor control circuits are not covered by this article.
Informational Note: See Article 430, Part VI, for motor control circuits.

Statement of Problem and Substantiation for Public Comment

As requested by the Correlating Committee, a task group was created from members of Code-Making Panels 3 and 11 to ensure that there were no conflicts between the articles within the purview of those committees. The suggestion from the task group is to revise the scope of Article 206 by clearly indicating that it does not cover motor control circuits. An informational Note is also suggested, as code users could benefit from clear direction after reading that the article does not cover the material in Article 430, Part VI.
The task group consisted of the following members: Ryan Jackson (Chair), Seth Mueller, Keith Waters, Sam Rokowski, and Daneil Van Sickle III. The chair wishes to thank these individuals for their time and efforts.

Related Item

- FR 8811

Submitter Information Verification

Submitter Full Name: Ryan Jackson
Organization: Self-employed
Street Address:
City:
State:
Zip:

Submittal Date: Thu Aug 22 15:24:50 EDT 2024
Committee: NEC-P03

Public Comment No. 1234-NFPA 70-2024 [Section No. 206.4(A)]

(A) Class 1 Power-Limited Remote-Control and Signaling Circuits.

Class 1 power-limited remote-control and signaling circuits shall comply with 724.30 through 724.52~~, 790.4 through 790.24 , and 794.204~~ . .

Informational Note: A Class 1 circuit is not considered safe from a fire initiation perspective and, therefore, has more stringent requirements than other power-limited circuits.

Statement of Problem and Substantiation for Public Comment

The text in the First Draft is not the text that was voted on and agreed to by CMP 3. The Correlating Comittee (assumed) appears to have added the language that I have marked for deletion. That language MUST be removed in the interest of fire safety.
A Class 1 circuit is not a "safe" circuit like a Class 2, Class 3, Class 4, PLFA, or communicaons circuit. That is very the reason that Class 1 circuits were removed from Article 725 for the 2023 NEC. There should be no reference to Article 790 or 720 or whatever the general requirements for limited energy systems ends up being.
The Informational Note that I recommend adding is help code users understand this issue, as the phrase "power-limited" is misleading to some.

Related Item

• FR 8811

Submitter Information Verification

Submitter Full Name: Ryan Jackson
Organization: Self-employed
Street Address:
City:
State:
Zip:

Submittal Date: Sun Aug 18 12:22:31 EDT 2024
Committee: NEC-P03

Public Comment No. 960-NFPA 70-2024 [Section No. 206.4(C)(1)]

(1) Sizes and Use.

(a) 18 AWG copper and 16 AWG copper or copper-clad aluminum conductors shall be permitted to supply loads that do not exceed the ampacities specified in 402.5. They shall be installed in a raceway, enclosure, or listed cable.

(b) 14 AWG copper-clad aluminum ~~conductors~~ conductors shall only ~~be permitted in Type MC cable and Type TC cable. They shall only~~ supply loads not exceeding 8 amperes. They shall be installed in a raceway, enclosure, or listed cable.

(c) Conductors larger than 16 AWG copper or copper-clad aluminum shall not supply loads greater than the ampacities specified in 310.14 without applying the ampacity adjustment and correction factors specified in 310.15 to the ampacity calculation.

(d) Flexible cords shall comply with Article 400, Parts I and II.

Statement of Problem and Substantiation for Public Comment

If we are permitted to install 18 AWG copper in raceways, there is no technical reason why 14 AWG copper-clad-aluminum cannot be installed in a raceway.

Related Item

- First Revision No. 8811-NFPA 70-2024

Submitter Information Verification

Submitter Full Name: Don Ganiere
Organization: none
Street Address:
City:
State:
Zip:

Submittal Date: Wed Aug 07 19:12:03 EDT 2024
Committee: NEC-P03

Public Comment No. 1235-NFPA 70-2024 [Section No. 206.4(C) [Excluding any Sub-Sections]]

Non-power-limited remote-control and signaling circuits shall be installed in accordance with 300.4 through 300.~~25 and~~ 27 and shall comply with 206.4(C)(1) through 206.4(C)(3).

Statement of Problem and Substantiation for Public Comment

The number of sections in Article 300 was expanded, but this section was not correlated to include them. Note the companion comment to delete section 300.28 in its entirety, making this recommended text accurate.

Related Item

- FR 8811

Submitter Information Verification

Submitter Full Name: Ryan Jackson
Organization: Self-employed
Street Address:
City:
State:
Zip:

Submittal Date: Sun Aug 18 12:34:41 EDT 2024
Committee: NEC-P03

Public Comment No. 540-NFPA 70-2024 [Section No. 300.1]

300.1 Scope.

(A) All Wiring Installations.

This article covers general requirements for wiring methods and materials for all wiring installations not over 1000 volts ac, 1500 volts dc, nominal, unless modified by other articles in Chapter 3.

(B) Integral Parts of Equipment.

The requirements of this article are not intended to apply to the conductors that form an integral part of equipment, such as motors, controllers, motor control centers, or factory-assembled control equipment or listed utilization equipment.

(C) Metric Designators and Trade Sizes.

Metric designators and trade sizes for conduit, tubing, and associated fittings and accessories shall be in accordance with Table 300.1(C).

Table 300.1(C) Metric Designators and Trade Sizes

Metric Designator	Trade Size
12	⅜
16	½
21	¾
27	1
35	1¼
41	1½
53	2
63	2½
78	3
91	3½
103	4
129	5
155	6
205	8

Note: The metric designators and trade sizes are for identification purposes only and are not actual dimensions.

Additional Proposed Changes

File Name	Description	Approved
CN_410.pdf		

Statement of Problem and Substantiation for Public Comment

NOTE: The following CC Note No. 410 appeared in the First Draft Report.

The Correlating Committee directs CMP 3 to review the scope of Article 300 with respect to the creation of Article 720 as the general requirements for wiring methods and materials for limited energy installations are now located in Article 720.

Related Item

- Correlating Committee Note No. 410

Submitter Information Verification

Submitter Full Name: CC Notes
Organization: NEC Correlating Committee
Street Address:
City:
State:
Zip:

Submittal Date: Tue Jul 30 23:35:11 EDT 2024
Committee: NEC-P03

Correlating Committee Note No. 410-NFPA 70-2024 [Section No. 300.1]

Submitter Information Verification

Committee: NEC-AAC
Submittal Date: Tue May 14 11:46:48 EDT 2024

Committee Statement

Committee Statement: The Correlating Committee directs CMP 3 to review the scope of Article 300 with respect to the creation of Article 720 as the general requirements for wiring methods and materials for limited energy installations are now located in Article 720.

Ballot Results

✔ **This item has passed ballot**

12 Eligible Voters
1 Not Returned
9 Affirmative All
2 Affirmative with Comments
0 Negative with Comments
0 Abstention

Not Returned

McDaniel, Roger D.

Affirmative All

Ayer, Lawrence S.

Hickman, Palmer L.

Jackson, Peter D.

Kendall, David H.

Manche, Alan

Osborne, Robert D.

Porter, Christine T.

Schultheis, Timothy James

Williams, David A.

Affirmative with Comment

Bowmer, Trevor N.

The minimum cover requirements of 300.7 should not be newly applied to communications cables now moved to Article 720. The minimum cover requirements added to the new Article 720 were only

applied to network power broadband cables in chapter 8 not to all communications systems regardless of electrical hazard and energy levels present. Other similar correlation issues may be created between Chapter 2 and 3 requirements and the new requirements of the Limited Energy articles that were extracted from the independent Chapter 8.

Holub, Richard A.

As currently written, the minimum cover requirements of 300.7 would apply to all underground installations under 1000V AC, 1500V DC, but no such minimum cover requirements are found in Article 720. Perhaps because of the limited energy it's not necessary, I think if this scope isn't clarified, then 720.5 should be revised to specifically exclude the minimum cover requirements of 300.7 for clarity. Also, in 720.5(D), there is a pointer to 720.5(A) for the underground cover requirements, which don't exist there, and in 720.5(A) there is a pointer to 722.2(A)(11), which doesn't exist. Correlation is needed in these sections.

Public Comment No. 863-NFPA 70-2024 [Section No. 300.1]

300.1 Scope.

(A) ~~All Wiring Installations~~ Covered . ~~This article covers general requirements for wiring methods and materials for all wiring installations not over 1000 volts ac, 1500 volts dc, nominal, unless modified by other articles in Chapter 3~~ .

(B) ~~Integral Parts of Equipment.~~

~~The requirements of this article are not intended to apply to~~

Not Covered.

(1) This article does not cover Class 1 power-limited circuits, Class 2 circuits, Class 3 circuits, Class 4 circuits, optical fiber systems, communications systems, antenna systems, community antenna systems, network-powered broadband communications systems, premises-powered broadband communications systems, and power-limited fire alarm systems.

(2) T his article does not cover the conductors that form an integral part of equipment, such as motors, controllers, motor control centers, or factory-assembled control equipment or listed utilization equipment.

~~**(C)** Metric Designators and Trade Sizes.~~

~~Metric designators and trade sizes for conduit, tubing, and associated fittings and accessories shall be in accordance with Table 300.1(C)~~ .

~~Table 300.1(C) Metric Designators and Trade Sizes~~

~~Metric~~

~~Designator Trade~~

~~Size 12 3/8 16 1/2 21 3/4 27 1 35 1 1/4 41 1 1/2 53 2 63 2 1/2 78 3 91 3 1/2 103 4 129 5 155 6 205 8~~

~~Note: The metric designators and trade sizes are for identification purposes only and are not actual dimensions.~~

Statement of Problem and Substantiation for Public Comment

This comment does three things.
First, it removes the material discussing metric raceway sizes, as that material never should have been within the article scope to begin with. A companion public comment has been submitted to relocate it to 300.19 (formerly 300.17), which is a more appropriate location.
Second, this comment makes the language found in 300.1(B) enforceable by deleting the language about what this article is "intended" to do and replacing it with language indicating what it does (and, in this instance, does not do).
Third, and most importantly, it removes the circuits covered in the new Article 720 from its scope. With the change to 90.3 as it relates to Chapter Eight's autonomy, and with the lack of clear guidance on Article 300's applicibility in the newly formed Article 720, this change is needed.
The inclusion of an Informational Note pointing to Article 720 (and perhaps Article 800, depending on what that article will now be) could be warranted as well.

Related Public Comments for This Document

Related Comment	Relationship
Public Comment No. 862-NFPA 70-2024 [Section No. 300.19]	Target for relocated text.
Public Comment No. 877-NFPA 70-2024 [Section No. 720.1]	

Related Item

• FCR 221 • FCR 149

Submitter Information Verification

Submitter Full Name: Ryan Jackson
Organization: Self-employed
Street Address:
City:
State:
Zip:

Submittal Date: Tue Aug 06 17:37:45 EDT 2024
Committee: NEC-P03

Public Comment No. 1668-NFPA 70-2024 [Section No. 300.1(A)]

(A) All Wiring Installations.

This article covers general requirements for wiring methods and materials for all wiring installations not over 1000 volts ac, 1500 volts dc, nominal, unless modified by other articles in Chapter 3. In addition, this article does not cover limited-energy wiring methods which are covered in Article 720.

Statement of Problem and Substantiation for Public Comment

The current scope of this article applies it to all wiring less than 1000V AC, 1500V DC, however this scope overlaps with the scope of 720.1 and needs to be clarified accordingly to avoid confusion. I've proposed language to clarify this but admit it does reference an entire article. Based on the NEC® Style Manual, this should be "allowed for context", however, the panel could also point the user to 720.1 for Limited-Energy Installations as an alternate.

Related Item

- CCN-410

Submitter Information Verification

Submitter Full Name: Richard Holub
Organization: The DuPont Company, Inc.
Street Address:
City:
State:
Zip:

Submittal Date: Mon Aug 26 08:12:21 EDT 2024
Committee: NEC-P03

Public Comment No. 1392-NFPA 70-2024 [Section No. 300.1(C)]

~~(C) Metric Designators and Trade Sizes.~~

~~Metric designators and trade sizes for conduit, tubing, and associated fittings and accessories shall be in accordance with Table 300.1(C) .~~

~~Table 300.1(C) Metric Designators and Trade Sizes~~

~~Metric Designator~~	~~Trade Size~~
~~12~~	~~3/8~~
~~16~~	~~1/2~~
~~21~~	~~3/4~~
~~27~~	~~1~~
~~35~~	~~1 1/4~~
~~41~~	~~1 1/2~~
~~53~~	~~2~~
~~63~~	~~2 1/2~~
~~78~~	~~3~~
~~91~~	~~3 1/2~~
~~103~~	~~4~~
~~129~~	~~5~~
~~155~~	~~6~~
~~205~~	~~8~~

~~Note: The metric designators and trade sizes are for identification purposes only and are not actual dimensions.~~

Statement of Problem and Substantiation for Public Comment

The scope is not the proper location for this mandatory requirement. Relocating this requirement and the table to 300.19(B) is more user friendly and a better location for requiring conduits, tubing, and associated fittings and accessories to be in accordance with the table for metric designators and trade sizes.

Related Public Comments for This Document

Related Comment	Relationship
Public Comment No. 1393-NFPA 70-2024 [Section No. 300.19]	
Public Comment No. 1394-NFPA 70-2024 [Section No. 305.1(C)]	
Public Comment No. 1396-NFPA 70-2024 [Section No. 305.27]	
Public Comment No. 1393-NFPA 70-2024 [Section No. 300.19]	
Public Comment No. 1394-NFPA 70-2024 [Section No. 305.1(C)]	
Public Comment No. 1396-NFPA 70-2024 [Section No. 305.27]	

Related Item

- FR-8622

Submitter Information Verification

Submitter Full Name: David Hittinger
Organization: Independent Electrical Contractors
Affiliation: IEC Codes and Standards
Street Address:
City:
State:
Zip:

Submittal Date: Wed Aug 21 21:54:53 EDT 2024
Committee: NEC-P03

Public Comment No. 140-NFPA 70-2024 [Section No. 300.4(C)]

~~(C) Damaged Conductors.~~

~~Conductors and wiring methods that are no longer suitable for use due to damage, such as overheating, fire damage, corrosive influences, or water, shall be replaced with products that comply with this code.~~

~~Informational Note No. 1: See NEMA GD 1-2019, *Evaluating Water-Damaged Electrical Equipment* , for information on electrical equipment and wiring methods damaged by water.~~

~~Informational Note No. 2: See NEMA GD 2-2021, *Evaluating Fire- and Heat-Damaged Electrical Equipment* , for information on electrical equipment and wiring methods damaged by fire or heat.~~

Statement of Problem and Substantiation for Public Comment

This article appears to be stepping outside of the scope of the code. 90.2(C) states that the code covers the installation and removal of conductors, it is not a maintenance document. Additionally, if an installer were to try and use possibly damaged wiring on a new installation, 110.7 would mandate that it must be free from short circuits and ground faults.

Related Item

• FR-8702

Submitter Information Verification

Submitter Full Name: Jesse Duvuvei
Organization: North Strabane Township
Street Address:
City:
State:
Zip:

Submittal Date: Mon Jul 22 09:01:46 EDT 2024
Committee: NEC-P03

Public Comment No. 26-NFPA 70-2024 [Section No. 300.4(C)]

(C) Damaged Conductors and Wiring Methods .

Conductors and wiring methods that are no longer suitable for use due to damage, such as overheating, fire damage, corrosive influences, or water, shall be replaced and comply with ~~products that comply with~~ this code.

Informational Note No. 1: See NEMA GD 1-2019, *Evaluating Water-Damaged Electrical Equipment*, for information on electrical equipment and wiring methods damaged by water.

Informational Note No. 2: See NEMA GD 2-2021, *Evaluating Fire- and Heat-Damaged Electrical Equipment*, for information on electrical equipment and wiring methods damaged by fire or heat.

Statement of Problem and Substantiation for Public Comment

This PC proposes to revise the title to correlate with the language in the requirement: conductors and wiring methods. Additionally, the text is revised to remove the undefined word "products" for clarity.

Related Item

- FR 8702

Submitter Information Verification

Submitter Full Name: Vincent Della Croce
Organization: Siemens
Street Address:
City:
State:
Zip:

Submittal Date: Wed Jul 10 16:51:45 EDT 2024
Committee: NEC-P03

Public Comment No. 1041-NFPA 70-2024 [Section No. 300.5(B)(1)]

(1) Paralleled Installations.

Conductors shall be permitted to be run in parallel in accordance with 310.10(G). The requirement to run all circuit conductors within the same raceway, auxiliary gutter, cable tray, trench, cable, or cord shall apply separately to each portion of the paralleled installation, and the equipment grounding conductors shall comply with 250.122. Connections, taps, or extensions made from paralleled conductors shall connect to all conductors of the paralleled set, grounded and ungrounded, as applicable.~~ Parallel~~ When conductors are to be tapped from conductors run in parallel, the parallel conductors shall be spliced or terminated using listed or approved devices which shall facilitate the connection of all paralleled conductors and the tap conductors of each grounded or ungrounded conductors. Parallel runs in cable trays shall comply with 392.20(C).

Exception: Conductors installed in nonmetallic raceways run underground shall be permitted to be arranged as isolated phase, neutral, and grounded conductor installations. The raceways shall be installed in close proximity, and the isolated phase, neutral, and grounded conductors shall comply with 300.22(B).

Statement of Problem and Substantiation for Public Comment

The current text does not address tapping parallel conductors. The proposed text would ensure that the parallel conductors would carry the same current.

Related Item

- PI-2177

Submitter Information Verification

Submitter Full Name: Dennis Querry
Organization: Trinity River Authority
Street Address:
City:
State:
Zip:

Submittal Date: Mon Aug 12 16:40:57 EDT 2024
Committee: NEC-P03

Public Comment No. 372-NFPA 70-2024 [Section No. 300.5(B)(4)]

(4) Column-Width ~~Enclosed~~ Panelboards.

Where an auxiliary gutter runs between a column-width ~~enclosed~~ panelboard and a pull box, and the pull box includes neutral terminations, the neutral conductors of circuits supplied from the panelboard shall be permitted to originate in the pull box.

Statement of Problem and Substantiation for Public Comment

An "enclosed panelboard" is not just a panelboard inside of an enclosure. According to UL Solution's Panelboards Marking and Applications Guide, an enclosed panelboard is a panelboard that is shipped from the factory in an enclosure for its designed use. Many panelboards do not meet this description because the panelboard and the cabinet are packaged separately. The term "enclosed panelboard" should not have been added to Article 100 in the 2023 NEC. It was added due to the misuse of the word "panelboard" throughout the NEC. The solution to this problem should have been to fix the misuse of the term by changing "panelboard" to "panelboard enclosure" when needed. Instead, a new term was created that made the misuse of the term no longer a misuse of terms, although it inadvertently created a new misuse of the term. The CMPs now must go back and not only fix the original misuse of terms, but also fix any time the phrase "enclosed panelboard" is used, as that term does not include most panelboards that are currently being installed.

Related Item

- FR 8825

Submitter Information Verification

Submitter Full Name: Ryan Jackson
Organization: Self-employed
Street Address:
City:
State:
Zip:

Submittal Date: Tue Jul 30 12:07:34 EDT 2024
Committee: NEC-P03

Public Comment No. 991-NFPA 70-2024 [Section No. 300.5(B)(4)]

(4) Column-Width ~~Enclosed~~ Panelboards.

Where an auxiliary gutter runs between a column-width ~~enclosed~~ panelboard and a pull box, and the pull box includes neutral terminations, the neutral conductors of circuits supplied from the panelboard shall be permitted to originate in the pull box.

Statement of Problem and Substantiation for Public Comment

The defined term of "enclosed panelboards" was deleted from Article 100 by First Revision No. 8903-NFPA 70-2024.

Related Item

- First Revision No. 8903-NFPA 70-2024

Submitter Information Verification

Submitter Full Name: Don Ganiere
Organization: none
Street Address:
City:
State:
Zip:

Submittal Date: Fri Aug 09 14:07:05 EDT 2024
Committee: NEC-P03

Public Comment No. 786-NFPA 70-2024 [Section No. 300.5(C)]

(C) Conductors of Different Systems.

(1) 1000 Volts ac or less , 1500 volts dc or less , Nominal~~, or Less~~ .

(a) *Insulation Voltage Rating.*Conductors of ac and dc circuits rated 1000 volts ac or less , 1500 volts dc or less , nominal~~ or less shall~~ , shall be permitted to occupy the same equipment wiring enclosure, cable, or raceway. All conductors shall have an insulation rating equal to at least the maximum circuit voltage applied to any conductor within the enclosure, cable, or raceway.

(b) *Electric-Discharge Lamps.*Secondary wiring to electric-discharge lamps of 1000 volts ac or less , 1500 volts dc or less, nominal, if insulated for the secondary voltage involved, shall be permitted to occupy the same luminaire, sign, or outline lighting enclosure as the branch-circuit conductors.

Informational Note No. 1: See 725.136(A) for Class 2 and Class 3 circuit conductors.

Informational Note No. 2: See 725.136(A) for Class 4 circuit conductors.

Informational Note No. 3: See 690.31(B) for photovoltaic source and output circuits.

(2) Over 1000 Volts ac, 1500 Volts dc, Nominal.

Conductors of circuits rated over 1000 volts ac ~~, 1500 volts dc, nominal, shall~~ or 1500 volts dc shall not occupy the same equipment wiring enclosure, cable, or raceway with conductors of circuits rated 1000 volts ac or less , 1500 volts dc or less , nominal,~~ or less unless~~ unless permitted in accordance with 305.13(B).

Statement of Problem and Substantiation for Public Comment

the new text is inconsistent in how it states "1000 volts ac, 1500 volts dc, or less, nominal". (C)(1)(b) has a problem where a comma was deleted and a strict reading means the "or less" only applies to 1500 volts dc.
(C)(2) has the problem of "over 1000 volts ac, 1500 volts dc, nominal" - why do we have to be over a "nominal voltage". If you're over 1000 ac or 1500 dc is more than sufficient for defining the condition.
If the panel doesn't agree with the pedantic expansion of "or less", I will also file individual PCs to fix just the specific problems to make the text match in all sections.

Related Public Comments for This Document

Related Comment	Relationship
Public Comment No. 787-NFPA 70-2024 [Section No. 300.5(C)(2)]	
Public Comment No. 788-NFPA 70-2024 [Section No. 300.5(C)(1)]	

Related Item

• FR-8628

Submitter Information Verification

Submitter Full Name: Chad Jones
Organization: Cisco Systems
Street Address:
City:
State:
Zip:

Submittal Date: Mon Aug 05 11:48:53 EDT 2024
Committee: NEC-P03

Public Comment No. 788-NFPA 70-2024 [Section No. 300.5(C)(1)]

(1) 1000 Volts ac, 1500 volts dc, Nominal, or Less.

(a) *Insulation Voltage Rating.*Conductors of ac and dc circuits rated 1000 volts ac, 1500 volts dc, nominal, or less shall be permitted to occupy the same equipment wiring enclosure, cable, or raceway. All conductors shall have an insulation rating equal to at least the maximum circuit voltage applied to any conductor within the enclosure, cable, or raceway.

(b) *Electric-Discharge Lamps.*Secondary wiring to electric-discharge lamps of 1000 volts ac, 1500 volts dc, nominal, or less, if insulated for the secondary voltage involved, shall be permitted to occupy the same luminaire, sign, or outline lighting enclosure as the branch-circuit conductors.

Informational Note No. 1: See 725.136(A) for Class 2 and Class 3 circuit conductors.

Informational Note No. 2: See 725.136(A) for Class 4 circuit conductors.

Informational Note No. 3: See 690.31(B) for photovoltaic source and output circuits.

Statement of Problem and Substantiation for Public Comment

See PC 786, as both this PC and that one should not be accepted. They are different solutions.
the title of (C)(1) has specific punctuation denoting that this section applies to systems with nominal voltages of 1000 volts ac or 1500 volts dc, or less. The code text does not carry this structure forward, allowing for a misread or - perhaps - intentional misinterpretation. The proposed change copies the section title format into each mention of the voltages in the section.

Related Public Comments for This Document

Related Comment	Relationship
Public Comment No. 786-NFPA 70-2024 [Section No. 300.5(C)]	

Related Item

- fr-8628

Submitter Information Verification

Submitter Full Name: Chad Jones
Organization: Cisco Systems
Street Address:
City:
State:
Zip:

Submittal Date: Mon Aug 05 12:03:41 EDT 2024
Committee: NEC-P03

Public Comment No. 787-NFPA 70-2024 [Section No. 300.5(C)(2)]

(2) Over 1000 Volts ac, 1500 Volts dc, Nominal.

Conductors of circuits rated over 1000 volts ac ~~, 1500 volts dc, nominal, shall~~ or 1500 volts dc shall not occupy the same equipment wiring enclosure, cable, or raceway with conductors of circuits rated 1000 volts ac, 1500 volts dc, nominal, or less unless permitted in accordance with 305.13(B).

Statement of Problem and Substantiation for Public Comment

See PC 786, both should not be accepted as they aren't identical solutions.
It's unclear why we'd write a restriction for a voltage limit based on a nominal voltage. 1000 volts ac or 1500 volts dc is a sufficient restriction and leaves no question about what "nominal" means in this case. Therefore, I've deleted nominal.

Related Public Comments for This Document

Related Comment	Relationship
Public Comment No. 786-NFPA 70-2024 [Section No. 300.5(C)]	mutually exclusive

Related Item

- fr-8628

Submitter Information Verification

Submitter Full Name: Chad Jones
Organization: Cisco Systems
Street Address:
City:
State:
Zip:

Submittal Date: Mon Aug 05 11:58:15 EDT 2024
Committee: NEC-P03

Public Comment No. 375-NFPA 70-2024 [Section No. 300.6(A)]

(A) Cables and Raceways Through ~~Wood~~ Framing Members and Furring Strips .

(1) ~~Bored~~ Holes.

In both exposed and concealed locations, ~~where a~~ if a cable- or raceway-type wiring method is installed through ~~bored~~ holes in joists, rafters, or other wood or steel framing members ~~, holes shall be bored so that~~ or furring strips, the edge of the hole ~~is~~ shall be not less than 32 mm (1¼ in.) from the edges of ~~the wood~~ framing member. Where this distance cannot be maintained, the cable or raceway shall be protected from penetration by screws or nails by a steel plate(s) or bushing(s) at least 1.6 mm (1/16 in.) thick, and of appropriate length and width, installed to cover the area of the wiring.

Exception No. 1: Steel plates shall not be required to protect rigid metal conduit, intermediate metal conduit, rigid PVC conduit, RTRC, or electrical metallic tubing.

Exception No. 2: A listed and marked steel plate less than 1.6 mm (1/16 in.) thick that provides equal or better protection against nail or screw penetration shall be permitted.

(2) Notches ~~in Wood~~ .

~~Where~~ If there is no objection because of weakening the building structure, in both exposed and concealed locations, cables or raceways shall be permitted to be laid in notches in ~~wood~~ studs, joists, rafters, or other ~~wood members where~~ framing members or furring strips if the cable or raceway at those points is protected from penetration by nails or screws by a steel plate at least 1.6 mm (1/16 in.) thick, and of appropriate length and width, installed to cover the area of the wiring. The steel plate shall be installed before the building finish is applied.

Exception No. 1: Steel plates shall not be required to protect rigid metal conduit, intermediate metal conduit, rigid nonmetallic conduit, or electrical metallic tubing.

Exception No. 2: A listed and marked steel plate less than 1.6 mm (1/16 in.) thick that provides equal or better protection against nail or screw penetration shall be permitted.

Statement of Problem and Substantiation for Public Comment

The submitter of PI 2220 has a valid point. It is easy to think of steel framing members as "traditional" 2x4 or larger, but smaller members are not uncommon. Hat channel, fo example, is commonly used as a furring material. If wiring is installed parallel to it, 300.4(D requires protection. If wiring is installed perpindicular, however, no such requirement exists. In addition to hat channel, steel studs that are smaller than 2x4 are sometimes utilized, and protecting the wiring is just as important there as it is for wood construction.

Related Public Comments for This Document

Related Comment	Relationship
Public Comment No. 385-NFPA 70-2024 [Section No. 305.14(A)]	

Related Item

- PI 2220

Submitter Information Verification

Submitter Full Name: Ryan Jackson
Organization: Self-employed
Street Address:
City:
State:
Zip:

Submittal Date: Tue Jul 30 12:18:27 EDT 2024
Committee: NEC-P03

Public Comment No. 297-NFPA 70-2024 [Sections 300.6(A), 300.6(B), 300.6(C), 300.6(D)]

Sections 300.6(A), 300.6(B), 300.6(C), 300.6(D)

(A) Cables and Raceways Through Wood Members.

(1) Bored Holes.

In both exposed and concealed locations, where a cable- or raceway-type wiring method is installed through bored holes in joists, rafters, or wood members, holes shall be bored so that the edge of the hole is not less than 32 mm (1¼ in.) from the edges of the wood member. Where this distance cannot be maintained, the cable or raceway shall be protected from penetration by screws or nails by a steel plate(s) or bushing(s) at least 1.6 mm (1/16 in.) thick, and of appropriate length and width, **but not less than 33mm (1-1/4in.) on either side of joist, rafter, wood or metal framing members** installed to cover the area of the wiring.

Exception No. 1: Steel plates shall not be required to protect rigid metal conduit, intermediate metal conduit, rigid PVC conduit, RTRC, or electrical metallic tubing.

Exception No. 2: A listed and marked steel plate less than 1.6 mm (1/16 in.) thick that provides equal or better protection against nail or screw penetration shall be permitted.

(2) Notches in Wood.

Where there is no objection because of weakening the building structure, in both exposed and concealed locations, cables or raceways shall be permitted to be laid in notches in wood studs, joists, rafters, or other wood members where the cable or raceway at those points is protected from penetration by nails or screws by a steel plate at least 1.6 mm (1/16 in.) thick, and of appropriate length and width **but not less than 33mm (1-1/4in.) on either side of joist , rafter, wood or metal framing members** installed to cover the area of the wiring. The steel plate shall be installed before the building finish is applied.

Exception No. 1: Steel plates shall not be required to protect rigid metal conduit, intermediate metal conduit, rigid nonmetallic conduit, or electrical metallic tubing.

Exception No. 2: A listed and marked steel plate less than 1.6 mm (1/16 in.) thick that provides equal or better protection against nail or screw penetration shall be permitted.

(B) Nonmetallic-Sheathed Cables and Electrical Nonmetallic Tubing Through Metal Framing Members.

(1) Nonmetallic-Sheathed Cable.

In both exposed and concealed locations where nonmetallic-sheathed cables pass through either factory- or field-punched, cut, or drilled slots or holes in metal members, the cable shall be protected by listed bushings or listed grommets covering all metal edges that are securely fastened in the opening prior to installation of the cable.

(2) Nonmetallic-Sheathed Cable and Electrical Nonmetallic Tubing.

Where nails or screws are likely to penetrate nonmetallic-sheathed cable or electrical nonmetallic tubing, ~~a~~ **and shall extend at least 33mm (1-1/4 in.) on either side of joists, rafters, wood or metal framing members** a steel sleeve, steel plate, or steel clip not less than 1.6 mm (1/16 in.) in thickness shall be used to protect the cable or tubing.

Exception: A listed and marked steel plate less than 1.6 mm (1/16 in.) thick that provides equal or better protection against nail or screw penetration shall be permitted.

(C) Cables Through Spaces Behind Panels Designed to Allow Access.

Cables or raceway-type wiring methods, installed behind panels designed to allow access shall be supported according to their applicable articles.

(D) Cables and Raceways Parallel to Framing Members and Furring Strips.

In both exposed and concealed locations, where a cable- or raceway-type wiring method is installed parallel to framing members, such as joists, rafters, or studs, or is installed parallel to furring strips, the cable or raceway shall be installed and supported so that the nearest outside surface of the cable or raceway is not less than 32 mm (1¼ in.) from the nearest edge of the framing member or furring strips where nails or screws are likely to penetrate. Where this distance cannot be maintained, the cable or raceway shall be protected from penetration by nails or screws by a steel plate, sleeve, or equivalent at least 1.6 mm (1/16 in.) thick.

Exception No. 1: Steel plates, sleeves, or the equivalent shall not be required to protect rigid metal conduit, intermediate metal conduit, rigid nonmetallic conduit, or electrical metallic tubing.

Exception No. 2: For concealed work in finished buildings, or finished panels for prefabricated buildings where such supporting is impracticable, it shall be permissible to fish the cables between access points.

Exception No. 3: A listed and marked steel plate less than 1.6 mm (1/16 in.) thick that provides equal or better protection against nail or screw penetration shall be permitted.

Additional Proposed Changes

File Name	Description	Approved
image.jpg	Job site photo of unprotected wire	

Statement of Problem and Substantiation for Public Comment

The NEC is not being enforced properly because of the existing wording. I think if the code explained fully as I proposed, then when a protection plate is used, it would also protect the wire on both sides of the framing member for the same distance of 1-1/4" inches. When a wire is run perpendicular to the furring strip as shown in photo it shall be protected for that 1-1/4 inches to be consistent. Why have this area unprotected? How can we ignore what is being allowed on job sites? Inspectors would like this clarified in new language.

Related Item

- 300.4 adding metal stud in section

Submitter Information Verification

Submitter Full Name: Vincent LAPORTA

Organization: LaPorta Inspection Service LLC

Street Address:

City:

State:
Zip:
Submittal Date: Sun Jul 28 16:00:46 EDT 2024
Committee: NEC-P03

Why choose Polyiso over other rigid foam insulation?
Superior fire performance
Higher service temperature (250°F)
Highest R/inch for maximum energy efficiency
Excellent resistance to water and vapor for optimal moisture control
Air barrier for additional thermal comfort
Can be used with Rmax R-SEAL Construction Tape or R-SEAL 3000 to seal joints.
Wire is not protected as stated in NEC The 1 1/4" inches on either side of framing member
THERMAL PROPERTIES
Thickness
R-Value
1/2"
3.2
5/8"
4.0
3/4"
5.0
1.0"
6.0
1.25"
7.8
1.5"
9.6
1.55"
10.0
2.0"
13.1
2.5"
16.7
3.0"
20.3
3.5"
23.9
4.0"
27.4

Public Comment No. 1140-NFPA 70-2024 [Section No. 300.6(E)]

(E) Wiring Methods and Materials ~~Beneath~~ ~~Roof~~ ~~Roof~~ in or Under Roof Decking.
~~If subject to physical damage, wiring~~ Wiring methods and materials ~~installed in exposed or concealed locations under~~ installed under roof decking, shall be installed to maintain not less than 38 mm (1 1/2 in.) separation from the lowest surface of the roof decking. Wiring methods shall not be installed in concealed locations in metal-corrugated, sheet decking–type roofs.

Informational Note: Roof decking material is often repaired or replaced after the initial raceway or cabling and roofing installation and might be penetrated by screws or other mechanical devices designed to provide “hold down” strength of the waterproof membrane or roof insulating material.

Exception No. 1: Rigid metal conduit and intermediate metal conduit, with listed steel or malleable iron fittings and boxes, shall not be required to comply with 300.6(E).

Exception No. 2: The 38 mm (1½ in.) spacing shall not be required where metal-corrugated sheet roof decking is covered with a minimum thickness 50 mm (2 in.) concrete slab, measured from the top of the corrugated roofing.

Exception No. 3: Wiring methods and materials shall be permitted in concealed locations where encased in concrete not less than 50 mm (2 in.) thick. Boxes and conduit bodies shall be installed in accordance with 314.29.

Statement of Problem and Substantiation for Public Comment

Including "if subject to physical damage" gives the impression that there are locations within 1-1/2" of the underside of a roof deck that are safe for electrical installations. The expansion of the requirements of 300.6 (E) makes sense, leaving room for unenumerated exceptions does not. All wiring methods are subject to the minimum distance from the decking and including exposed and concealed is unnecessary. The previous heading included wiring methods in the roof deck as well as under it, and the last sentence of the subdivision still includes restrictions on installing wiring methods in, not under a roof deck. The language including both in the heading should be retained.

Related Item

- FR-8656

Submitter Information Verification

Submitter Full Name: David Hittinger
Organization: Independent Electrical Contractors
Affiliation: IEC Codes and Standards
Street Address:
City:
State:
Zip:

Submittal Date: Thu Aug 15 22:11:26 EDT 2024
Committee: NEC-P03

Public Comment No. 993-NFPA 70-2024 [Section No. 300.6(G)]

(G) Fittings.

Where raceways contain 4 AWG or larger insulated circuit conductors, and these conductors enter a cabinet, a box, an enclosure, or a raceway, prior to the installation of conductors, the conductors shall be protected in accordance with any of the following:

(1) An identified fitting providing a smoothly rounded insulating surface

(2) A listed metal fitting that has smoothly rounded edges

(3) Separation from the fitting or raceway using an identified insulating material that is securely fastened in place

(4) Threaded hubs or bosses that are an integral part of a cabinet, box, enclosure, or raceway providing a smoothly rounded or flared entry for conductors

Conduit bushings constructed wholly of insulating material shall not be used to secure a fitting or raceway. The insulating fitting or insulating material shall have a temperature rating not less than the insulation temperature rating of the installed conductors.

Exception. Where mechanical pulling equipment is used and where that equipment slides into the raceway and provides protection for the conductors while they are being pull, the bushing shall be permitted to be installed after the conductors have been installed.

Statement of Problem and Substantiation for Public Comment

Some types of mechanical pulling equipment use adapters that slide into the raceway. The use of such adapters is prohibited by the current rule requiring that the protective bushing be installed prior to the installation of the conductors. These pulling adapters provide the required protection of the conductors while they are being installed. In these cases the bushing should be permitted to be installed after the conductors have been installed.

Related Item

• Public Input No. 2691-NFPA 70-2023

Submitter Information Verification

Submitter Full Name: Don Ganiere
Organization: none
Street Address:
City:
State:
Zip:

Submittal Date: Fri Aug 09 14:18:03 EDT 2024
Committee: NEC-P03

Public Comment No. 131-NFPA 70-2024 [Section No. 300.7(A)]

(A) Minimum Cover Requirements.

Direct-buried cable, conduit, or other raceways shall be installed to meet the minimum cover requirements of Table 300.7(A).

Table 300.7(A) Minimum Cover Requirements, 0 to 1000 Volts ac, 1500 Volts dc, Nominal, Burial in Millimeters (Inches)

Location of Wiring Method or Circuit	-		Type of Wiring Method or Circuit									
	Column 1 Direct Burial Cables or Conductors		Column 2 Rigid Metal Conduit or Intermediate Metal Conduit		Column 3 Electrical Metallic Tubing, Nonmetallic Raceways Listed for Direct Burial Without Concrete Encasement, or Other Approved Raceways		Column 4 Residential Branch Circuits Rated 120 Volts ~~or Less~~ to 50 Volts with GFCI Protection and Maximum Overcurrent Protection of 20 Amperes		Column 5 Circuits for Control of Irrigation and Landscape Lighting Limited to Not More Than ~~30 Volts~~ 50 Volts and Installed with Type UF or in Other Identified Cable or Raceway			
	mm	in.	mm	in.	mm	in.	mm	in.	mm	in.		
All locations not specified below	600	24	150	6	450	18	300	12	150[1,2]	6[1,2]		
In trench below 50 mm (2 in.) thick concrete or equivalent	450	18	150	6	300	12	150	6	150	6		
Under a building	0	0	0	0	0	0	0	0	0	0		
	-	(in raceway or Type MC or Type MI cable identified for direct burial)	-	-	-	-					(in raceway or Type MC or Type MI cable identified for direct burial)	(in raceway or Type MC or Type MI cable identified for direct burial)
Under minimum of 102 mm (4 in.) thick concrete exterior slab with no vehicular traffic and the slab extending not less than 152 mm (6 in.) beyond the underground installation	450	18	100	4	100	4	150 (direct burial) 100 (in raceway)	6 4	150 (direct burial) 100 (in raceway)	6 4		
Under streets, highways, roads, alleys, driveways, and parking lots	600	24	600	24	600	24	600	24	600	24		
One- and two-family dwelling driveways and outdoor parking areas, and used only for dwelling-related purposes	450	~~18~~ 24	450	18	450	~~18~~ 24	300	~~12~~ 24	450	18		
In or under airport runways, including adjacent areas where trespassing is prohibited	450	18	450	18	450	18	450	18	450	18		

[1]A lesser depth shall be permitted where specified in the installation instructions of a listed low-voltage lighting system.

[2]A depth of 150 mm (6 in.) shall be permitted for pool, spa, and fountain lighting, installed in a nonmetallic raceway, limited to not more than 30 volts where part of a listed low-voltage lighting system.

Notes:

1. Cover shall be defined as the shortest distance in mm (in.) measured between a point on the top surface of any direct-buried conductor, cable, conduit, or other raceway and the top surface of finished grade, concrete, or similar cover.

2. Raceways approved for burial only where concrete encased shall require a concrete envelope not less than 50 mm (2 in.) thick.

3. Lesser depths shall be permitted where cables and conductors rise for terminations or splices or where access is otherwise required.

4. Where one of the wiring method types listed in Columns 1 through 3 is used for one of the circuit types in Columns 4 and 5, the shallowest depth of burial shall be permitted.

5. Where solid rock prevents compliance with the cover depths specified in this table, the wiring shall be installed in a metal raceway, or a nonmetallic raceway permitted for direct burial. The raceways shall be covered by a minimum of 50 mm (2 in.) of concrete extending down to rock.

6. Directly buried electrical metallic tubing (EMT) shall comply with 358.10.

Statement of Problem and Substantiation for Public Comment

Many times, I have made repairs and/or met the person who got hurt from cables not being buried deep enough. This is supposed to be the minimum standard but due to laziness and cost it is the set standard people use. A tiller or someone driving a T-Post has hit wires. The rule needs to be set deeper.

Related Item

- Contractor

Submitter Information Verification

Submitter Full Name: Douglas Brown
Organization: Brown's Electrical Services
Affiliation: Customer
Street Address:
City:
State:
Zip:
Submittal Date: Sun Jul 21 12:43:26 EDT 2024
Committee: NEC-P03

Public Comment No. 1866-NFPA 70-2024 [Section No. 300.7(A)]

(A) Minimum Cover Requirements.

Direct-buried cable, conduit, or other raceways shall be installed to meet the minimum cover requirements of 300.7(A)(1)-(5) .

(1) Under Buildings

Circuits in raceways or Type MC or Type MI cable identified for direct burial installed under a building shall not require any additional cover than the building itself

(2) Streets, Highways, Roads, Alleys, Driveways, and Parking Lots or Areas

Circuits in cables, raceways, and wiring methods identified for direct burial installed under streets, highways, roads, alleys, driveways, and parking lots or areas, shall have a minimum cover in accordance with the following:

(a) 450mm (18 in) for one- and two-family dwelling unit circuits

(b) 300mm (12 in) for one- and two-family dwelling unit circuits rated 120-volts and 20-amperes or less with GFCI protection.

(c) 600mm (24 in) for other than one- and two-family dwelling units.

(3) Under Airport Runways

Circuits installed in raceways and wiring methods identified for direct burial installed in or under airport runways, including adjacent areas where trespassing is prohibited shall have a minimum cover of 450mm (18 in)

(4) All Other Areas

All other areas not specified in 300.7(A)(1)-(3) shall be installed to meet the cover requirements in Table 300.7(A) - (4)

Table 300.7(A) ~~Minimum~~ (4) Minimum Cover Requirements, 0 to 1000 Volts ac, 1500 Volts dc, Nominal, Burial in Millimeters (Inches)

~~a building~~

Location of Wiring Method or Circuit	-		Type of Wiring Method or Circuit									
	Column 1 Direct Burial Cables or Conductors		Column 2 Rigid Metal Conduit or Intermediate Metal Conduit		Column 3 Electrical Metallic Tubing, Nonmetallic Raceways Listed for Direct Burial ~~Without Concrete Encasement,~~ or Other Approved Raceways		Column 4 Residential Branch Circuits Rated 120 Volts or Less with GFCI Protection and Maximum Overcurrent Protection of 20 Amperes		Column 5 Circuits for Control of Irrigation and Landscape Lighting Limited to Not More Than 30 Volts and Installed with Type UF or in Other Identified Cable or Raceway	
	mm	in.	mm	in.	mm	in.	mm	in.	mm	in.
All locations not specified below	600	24	150	6	450	18	300	12	150[1,2]	6[1,2]
In trench below or encased in 50 mm (2 in.) thick concrete or equivalent	450	18	150	6	300	12	150	6	150	6
Under	~~0~~	~~0~~	~~0~~	~~0~~	~~0~~	~~0~~	~~0~~	~~0~~	~~0~~	~~0~~
	-	~~(in raceway or Type MC or Type MI cable identified for direct burial)~~	-	-	-	-	~~(in raceway or Type MC or Type MI cable identified for direct burial)~~		~~(in raceway or Type MC or Type MI cable identified for direct burial)~~	
	~~Under~~ minimum of 102 mm (4 in.) thick concrete exterior slab with no vehicular traffic and the slab extending not less than 152 mm (6 in.) beyond the underground installation	450 18	100 4		100 4		150 6 (direct burial) 4 100 (in raceway)		150 6 (direct burial) 4	
100 (in raceway)										
~~Under streets, highways, roads, alleys, driveways, and parking lots~~	~~600~~	~~24~~	~~600~~	~~24~~	~~600~~	~~24~~	~~600~~	~~24~~	~~600~~	~~24~~
~~One- and two-family dwelling driveways and outdoor parking areas, and used only for dwelling-related purposes~~	~~450~~	~~18~~	~~450~~	~~18~~	~~450~~	~~18~~	~~300~~	~~12~~	~~450~~	~~18~~
~~In or under airport runways, including adjacent areas where trespassing is prohibited~~	~~450~~	~~18~~	~~450~~	~~18~~	~~450~~	~~18~~	~~450~~	~~18~~	~~450~~	~~18~~

[1] A lesser depth shall be permitted where specified in the installation instructions of a listed low-voltage lighting system.

[2] A depth of 150 mm (6 in.) shall be permitted for pool, spa, and fountain lighting, installed in a nonmetallic raceway, limited to not more than 30 volts where part of a listed low-voltage lighting system.

Notes:

1. Cover shall be defined as the shortest distance in mm (in.) measured between a point on the top surface of any direct-buried conductor, cable, conduit, or other raceway and the top surface of finished grade, concrete, or similar cover.

2. Raceways approved for burial only where concrete encased shall require a concrete envelope not less than 50 mm (2 in.) thick.

3. Lesser depths shall be permitted where cables and conductors rise for terminations or splices or where access is otherwise required.

4. Where one of the wiring method types listed in Columns 1 through 3 is used for one of the circuit types in Columns 4 and 5, the shallowest depth of burial shall be permitted.

5. Where solid rock prevents compliance with the cover depths specified in this table, the wiring shall be installed in a metal raceway, or a nonmetallic raceway permitted for direct burial. The raceways shall be covered by a minimum of 50 mm (2 in.) of concrete extending down to rock.

6. Directly buried electrical metallic tubing (EMT) shall comply with 358.10.

Additional Proposed Changes

File Name	Description	Approved
Section-Table_300.7_A_.docx	Section-Table 300.7(A)	

Statement of Problem and Substantiation for Public Comment

This public comment is submitted in response to the resolution of PI-1616 and the committee statement regarding the clarity of the proposed changes. Terra modified the formatting so for the public comment the proposed changes are also provided in a word doc attachment. Additionally, a similar proposal made by PI-1619 was acted on favorably by CMP 9 for the >1000-volts version of this table in 305.15(A).
Here is the original PI substantiation as submitted:
A revision of Section 300.7(A) and Table 300.7(A) is needed for clarification as the Table is confusing to use and unclear for certain installation conditions.
Examples of the unclear installation conditions are as follows:
1. In trench below 50mm (2 in) thick concrete or equivalent has a burial depth listed under condition 3 which states no concrete encasement creating confusion.
2. Under minimum of 102mm (4 in) thick concrete exterior slab with no vehicular traffic and the slab extending not less than 152mm (6 in) beyond the underground installation also has a burial depth under condition 3 no concrete encasement which creates user confusion.
3. some rows of the table have all the same depth listed under each condition, so what are they part of the table. These would be better suited as code text making the table smaller and more user friendly.

Related Item

- PI-1616

Submitter Information Verification

Submitter Full Name: Jeff Noren
Organization: National Electrical Contractors Association
Street Address:
City:
State:
Zip:

Submittal Date: Tue Aug 27 18:53:07 EDT 2024
Committee: NEC-P03

Proposed Changes to Section/Table 300.6(A).

300.7(A)

(A) Minimum Cover Requirements.

Direct-buried cable, conduit, or other raceway shall be installed to meet the minimum cover requirements of ~~Table~~ 300.7(A)(1)-(5).

(1) Under Buildings.

Circuits in raceways or Type MC or Type MI cable identified for direct burial installed under a building shall not require any additional cover than the building itself.

(2) Streets, Highways, Roads, Alleys, Driveways, and Parking Lots or Areas.

Circuits in cables, raceways, and wiring methods identified for direct burial installed under streets, highways, roads, alleys, driveways, and parking lots or areas, shall have a minimum cover in accordance with the following:

- **a.** 450mm (18in.) for one- and two-family dwelling unit circuits.
- **b.** 300mm (12in.) for one- and two-family dwelling unit circuits rated 120-volts and 20-amperes or less with GFCI protection.
- **c.** 600mm (24in.) for other than one- and two-family dwelling units.

(3) Under Airport Runways.

Circuits installed in raceways and wiring methods identified for direct burial installed in or under airport runways, including adjacent areas where trespassing is prohibited shall have a minimum cover of 450mm (18in.)

(4) All Other Areas.

All other areas not specified in 300.7(A)(1)-(3) shall be installed to meet the cover requirements in Table 300.7(A)(4).

Table 300.7(A)(4) Minimum Cover Requirements, 0 to 1000 Volts ac, 1500 Volts dc, Nominal, Burial in Millimeters (Inches).

Location of Wiring Method or Circuit	Type of Wiring Method or Circuit									
	Column 1 Direct Burial Cables or Conductors		Column 2 Rigid Metal Conduit or Intermediate Metal Conduit		Column 3 Electrical Metallic Tubing, Nonmetallic Raceways Listed for Direct Burial ~~Without Concrete Encasement,~~ or Other Approved Raceways		Column 4 Residential Branch Circuit Rated 120 Volts or Less with GFCI Protection and Maximum Overcurrent Protection of 20 Amperes		Column 5 Circuit for Control of Irrigation and Landscape Lighting Limited to Not More Than 30 Volts and Installed with Type UF or in Other Identified Cable or Raceway	
	mm	in.	mm	In.	mm	in.	mm	in.	mm	in.
All locations not specified below	600	24	150	6	450	18	300	12	150 [1,2]	6 [1,2]
In trench below or encased in 50 mm (2 in.) thick concrete or equivalent	450		150	6	300		150	6	150	6
~~Under a building~~	~~0~~ ~~(in raceway or Type MC or Type MI cable identified for direct burial)~~	~~0~~	~~0~~	~~0~~	~~0~~	~~0~~	~~0~~ ~~(in raceway or Type MC or Type MI cable identified for direct burial)~~	~~0~~	~~0~~ ~~(in raceway or Type MC or Type MI cable identified for direct burial)~~	~~0~~

Formatted: Font: (Default) Calibri, 10

Formatted: Normal, Indent: Left: 0.5 numbering

Formatted: Font: Bold, Font color: Cu Color(RGB(0,26,57))

Formatted: Indent: Left: 0.75", No b numbering

Formatted: Font: (Default) Calibri, 10 color: Custom Color(RGB(0,26,57))

Formatted: Font: (Default) Calibri, 10 Custom Color(RGB(0,26,57))

Formatted: Normal, Indent: Left: 0.5 numbering

Formatted: Font: Bold

Formatted: Font: Bold, Italic

Formatted: Font: Bold, Italic

Formatted: Font: Bold, Italic

Formatted: Indent: Left: 0.75", No b numbering

Formatted: Font: (Default) Calibri, 10 color: Custom Color(RGB(0,26,57))

Formatted: Font: Italic

Formatted: Font: (Default) Calibri, 10 Custom Color(RGB(0,26,57))

Formatted: Font: Italic

Formatted: Indent: Left: 0.75", No b numbering

Formatted: Font: Italic

Proposed Changes to Section/Table 300.6(A).

Under minimum of 102 mm (4 in.) thick concrete exterior slab with no vehicular traffic and the slab extending not less than 152 mm (6 in.) beyond the underground installations	450	18	100	4	100	4	150 (direct burial) 100 (in raceway)	6 4	150 (direct burial) 100 (in raceway)	6 4
~~Under streets, highways, roads, alleys, driveways, and parking lots~~	~~600~~	~~24~~	~~600~~	~~24~~	~~600~~	~~24~~	~~600~~	~~24~~	~~600~~	~~24~~
~~One- and two-family dwelling driveways and outdoor parking areas and used only for dwelling related purposes~~	~~450~~	~~18~~	~~450~~	~~18~~	~~450~~	~~18~~	~~300~~	~~12~~	~~450~~	~~18~~
~~In or under airport runways, including adjacent areas where trespassing is prohibited~~	~~450~~	~~18~~	~~450~~	~~18~~	~~450~~	~~18~~	~~450~~	~~18~~	~~450~~	~~18~~

[1]A lesser depth shall be permitted where specified in the installation instructions of a listed low-voltage lighting system.
[2]A depth of 150 mm (6 in.) shall be permitted for pool, spa, and fountain lighting, installed in a nonmetallic raceway, limited to not more than 30 volts where part of a listed low-voltage lighting system.

Notes:

(1) Cover shall be defined as the shortest distance in mm (in.) measured between a point on the top surface of any direct-buried conductor, cable, conduit, or other raceway and the top surface of finished grade, concrete, or similar cover.
(2) Raceways approved for burial only where concrete encased shall require a concrete envelope not less than 50 mm (2 in.) thick.
(3) Lesser depths shall be permitted where cables and conductors rise for terminations or splices or where access is otherwise required.
(4) Where one of the wiring method types listed in Columns 1 through 3 is used for one of the circuit types in Columns 4 and 5, the shallowest depth of burial shall be permitted.
(5) Where solid rock prevents compliance with the cover depths specified in this table, the wiring shall be installed in a metal raceway, or a nonmetallic raceway permitted for direct burial. The raceways shall be covered by a minimum of 50 mm (2 in.) of concrete extending down to rock.
(6) Directly buried electrical metallic tubing (EMT) shall comply with 358.10.

Public Comment No. 548-NFPA 70-2024 [Section No. 300.7(D)(3)]

(3) Service Conductors and Raceways.

~~Underground~~ Direct-buried service conductors and raceways containing service conductors that are not encased in concrete and that are buried 450 mm (18 in.) or more below grade shall have their location identified by a warning ribbon that is placed in the trench at least 300 mm (12 in.) above the underground installation.

Statement of Problem and Substantiation for Public Comment

As written in the first draft draft, it could be argued that any underground raceway requires the ribbon discussed in this section. This comment editorially revises the language to clarify that only raceways containing service conductors need conform to this requirement.

Related Item

- FR 8880

Submitter Information Verification

Submitter Full Name: Ryan Jackson
Organization: Self-employed
Street Address:
City:
State:
Zip:

Submittal Date: Wed Jul 31 10:13:48 EDT 2024
Committee: NEC-P03

Public Comment No. 1187-NFPA 70-2024 [Section No. 300.7(J)]

(J)

Earth Movement.

Where direct-buried conductors, raceways, or cables are subject to movement by settlement

~~or frost~~

, direct-buried conductors, raceways, or

~~cables~~

cable shall be arranged so as to prevent damage to the enclosed conductors, to raceways, or to equipment connected to the raceways.

Informational Note:

This section recognizes "S" loops in underground direct burial cables and conductors to raceway transitions, expansion fittings in raceway risers to fixed equipment

and

generally, the provision of flexible connections to equipment subject to settlement .

(L) Seasonal Frost.

Where direct-buried conductors, raceways, or cables are subject to movement by seasonal frost formation, direct-buried conductors, raceways, or cable shall be arranged so as to prevent damage to the enclosed conductors, to raceways, or to equipment connected to the raceways.

Informational Note: This section recognizes the installation of underground direct burial cables below the seasonal frost layer, where not practical conductors to raceway transitions to fixed equipment shall be affixed to the same support as the fixed equipment and generally, the provision of flexible connections to equipment subject to frost heaves.

(M) Protection from Ice Formation Damage

Conduits susceptible to flooding and freezing should be installed to allow continuous drainage, use water displacement materials, or materials that allow for deformation during freeze cycles.

Statement of Problem and Substantiation for Public Comment

Comment on First Revision No. 8721-NFPA 70-2024 [Section No. 300.5(J)]

The inclusion of raceways is a great initial step in the protection of raceways from Earth Movement but may have unintended consequences in northern regions. There are two failure modes for conduits due to seasonal frost, both of which will be challenging if not impossible where you "shall … prevent damage" to raceways or cables:

1) Seasonal frost movement can exert extreme vertical forces on conductors and raceways as the underlying water-rich soil freezes and expands. The further the frostline extends beneath the raceway, the greater the potential vertical movement. General practice is to install underground raceways below the frostline, but that may not be practical in northern regions where seasonal frost can reach depths of six to seven feet. Even with placement beneath the frostline, the transition to the surface will be subjected to extreme tension as the raceway is pulled by the expanding seasonal frost layer while gripped at both the surface ice and the compacted earth below the frostline. "S" loops that are placed in seasonal frost may be ineffective, as once frozen they are gripped in frozen ground which will severely restrict any strain relief.

2) The other failure mode is when a raceway installed in the seasonal frost zone, has filled with water, either from high water table or surface flooding and is then subjected to freezing. The water will expand when freezing and then rupture the raceway if above ground or crush the conductors if the raceway is buried. Ice damage is especially an issue with airport lighting circuits, circuits under roadway intersections, parking lots, and snow removal areas that can increase frost depth or areas with a high-water table where drainage is ineffective. Well intentioned ideas have been tried, such as drilling "drain holes" in elbows, but end up providing a water source to flood the raceway into the sloped conduit when water tables are high.

This may be an opportunity to research and incorporate changes in the Informational Note and alternative options that reflect the best practices that are successfully being deployed in northern regions and currently preventing frost damage to conductors and raceways.

Introduction:
The pressures exerted by the expansion of freezing water within duct or conduit installations and their associated vaults or enclosures can be extreme. These pressures have been calculated to reach upward to 63,000 psi, which is equivalent to the pressures commonly encountered in large caliber rifle chambers when firing a cartridge. Utilities located within northern temperate, sub-arctic and arctic regions such as in the northern contiguous United States, Canada and Alaska (and other similar regions worldwide) have been trying to devise methods to prevent damage to power and communication conductors and equipment that are installed within duct/vault systems for many years. Ultimately, a method of freeze damage protection would avoid outages and repair costs as well as reducing the increased costs required for spare or redundant duct additions to assure reliability.

Cable damage from ice formation has been a problem in northern regions, where conduits can flood within the seasonal frost zone. This is especially an issue with airport lighting circuits, circuits under roadway intersections, parking lots, snow removal areas that increase frost depth or areas with high water table where drainage is ineffective.

Problem Statement:
Conductors are often installed in conduits or duct systems for mechanical protection from the environment and to allow for possible replacement after a conductor

failure when the ground is frozen. Conductors installed in underground ducts are generally classified as being installed in wet locations. Electrical rigid metal conduits do not have tapered threads and when installed, are not watertight. While the air pressure within installed conduits and ducts is basically 0 psi gauge, ground water pressure is always higher. Water therefore will force in through couplings, expansion joints or other duct connections. Water also enters ducts, vaults or enclosures by infiltration or flooding from the surface or will otherwise flood in or infiltrate through the open conduit ends. Once in the conduit or duct system, water fills the voids between the conductors within the conduit. During the winter months the ground may freeze down to or beyond a depth of 6 – 7 feet depending upon geographic location. Conduits are typically placed from 24-42 inches below grade, which is well within the freeze depth. As the ground freezes around the conduit, it forms a layer of frozen soil around the conduit that can approach the strength of concrete. As the ground continues to freeze, the water at the ends and inside the conduit also starts to freeze, capturing liquid water in the conduit. As the water continues to freeze in these confined spaces, the pressure increases due to the expansion of water as it changes to ice. If the conduit or duct is above ground, the conduit will rupture from the high pressure. When the conduit is in frozen ground the strength of the conduit is greatly increased by the surrounding frozen earth which allows the pressure inside the conduit to reach extremely high pressures. As these high pressures increase, the pressure is applied to the conductors causing deformation and failure of the conductor insulation. Driven by increasing pressure, expanding ice attempts to flow along the duct or conduit seeking the necessary volume dictated by its change of state from water to ice. The result is insulation and/or conductor failure.

Solutions:
There are a few ways to protect conductors in conduits or ducts located within frozen ground or free air from damage:
1) Keep the water out (commonly called the submarine approach). Keeping water out of a conduit system can be extremely difficult unless all water entry points are sealed and continuous maintenance methods are strictly assured and enforced. The couplings on rigid metal conduit are not sealed and allow water entry from the elevated water pressure that exists around a buried conduit. Above ground ducts and conduit systems also tend to retain all infiltrated water. The most common way to avoid standing water in conduits is grading, where the conduit is sloped to a drain point. In areas of high water table, the drain point allows water to flow back in the conduit/duct from the intended drain point. The layout of the conduit/duct can also interfere with draining when there are elbows or fitting that are intended to provide a continuous enclosed path from buried depth to the surface. Lastly, storming conditions or flooding can allow water to enter conduits/ducts from the end points.

2) Keep the water liquid through the use of heat or chemicals. Heat or chemicals are expensive and often impractical or wasteful. Chemicals can be added to the conduit to suppress the freezing point of the water, similar to anti-freeze. Chemicals must be approved for use with the conductor insulation and monitoring against dilution over time must be assured. With heated duct/conduits temperatures must be controlled and monitored to prevent insulation damage and allow the full ampacity of the conductor to be achieved.

3) Displace the water with another material, such as a gel or expanded or blown in beaded foam. Expanding foam tends to expand around the conductors and will prevent the change out of the conductor following a failure. Gels or beaded foam will displace the water but will not withstand flowing water which can occur in a conduit/duct.

4) Use a volume donating material where water is allowed to enter and remain in the conduit/duct in the presence of a compressible material originally installed with the conductors. The compressible material should be sized to provide adequate water-to-ice volume donation within the duct/conduit (typically 20%-25% of void space). This volume donation by the inert, non-conductive, and compressible material would provide duct and conduit freeze protection by donating all necessary volume through soft material compression. With the necessary volume donation available, conduit and duct pressure remain static, and damage is prevented during the freeze cycle.

Related Item

• 8721-NFPA 70-2024

Submitter Information Verification

Submitter Full Name: Steven Haagenson
Organization: MC2 Solutions LLC
Street Address:
City:
State:
Zip:

Submittal Date: Fri Aug 16 20:50:54 EDT 2024
Committee: NEC-P03

Public Comment No. 378-NFPA 70-2024 [Section No. 300.8]

300.8 Protection Against Corrosion and Deterioration.

Raceways, cable trays, cablebus, auxiliary gutters, cable armor, boxes, cable sheathing, cabinets, enclosures ~~(other than surrounding fences and walls)~~ , elbows, couplings, fittings, supports, and support hardware shall be of materials suitable for the environment in which they are to be installed. For the purposes of this section, enclosures shall not include fences or walls surrounding electrical equipment.

(A) Ferrous Metal Equipment.

Ferrous metal raceways, cable trays, cablebus, auxiliary gutters, cable armor, boxes, cable sheathing, cabinets, enclosures ~~(other than surrounding fences and walls)~~ , elbows, couplings, nipples, fittings, supports, and support hardware shall be suitably protected against corrosion ~~inside and outside (except threads at joints)~~ by a coating of approved corrosion-resistant material. Where corrosion protection is necessary and the conduit is threaded anywhere other than at the factory where the product is listed, the threads shall be coated with an approved electrically conductive, corrosion-resistant compound.

Exception: Stainless steel shall not be required to have protective coatings.

(1) Protected from Corrosion Solely by Enamel.

Where protected from corrosion solely by enamel, ferrous metal raceways, cable trays, cablebus, auxiliary gutters, cable armor, boxes, cable sheathing, cabinets, enclosures ~~(other than surrounding fences and walls)~~ , elbows, couplings, nipples, fittings, supports, and support hardware shall not be used outdoors or in wet locations as described in 300.8(D).

(2) Organic Coatings on Boxes or Cabinets.

Where boxes, cabinets, or enclosures ~~(other than surrounding fences and walls)~~ have an approved system of organic coatings and are marked "Raintight," "Rainproof," or "Outdoor Type," they shall be permitted outdoors.

(3) In Concrete or in Direct Contact with the Earth.

Ferrous metal raceways, cable armor, boxes, cable sheathing, cabinets, enclosures ~~(other than surrounding fences and walls)~~ , elbows, couplings, nipples, fittings, supports, and support hardware shall be permitted to be installed in concrete, in direct contact with the earth, or in areas subject to severe corrosive influences where made of material approved for the condition or where provided with corrosion protection approved for the condition.

(B) Aluminum Metal Equipment.

Aluminum raceways, cable trays, cablebus, auxiliary gutters, cable armor, boxes, cable sheathing, cabinets, enclosures ~~(other than surrounding fences and walls)~~ , elbows, couplings, nipples, fittings, supports, and support hardware embedded or encased in concrete or in direct contact with the earth shall be provided with supplementary corrosion protection.

(C) Nonmetallic Equipment.

Nonmetallic raceways, cable trays, cablebus, auxiliary gutters, boxes, cables with a nonmetallic outer jacket and internal metal armor or jacket, cable sheathing, cabinets, enclosures ~~(other than surrounding fences and walls)~~ , elbows, couplings, nipples, fittings, supports, and support hardware shall be made of material approved for the condition and shall comply with 300.8(C)(1) and 300.8(C)(2) as applicable to the specific installation.

(1) Exposed to Sunlight.

Where exposed to sunlight, the materials shall be listed as sunlight resistant or shall be identified as sunlight resistant.

(2) Chemical Exposure.

Where subject to exposure to chemical solvents, vapors, splashing, or immersion, materials or coatings shall either be inherently resistant to chemicals based on their listing or be identified for the specific chemical reagent.

(D) Indoor Wet Locations.

In portions of dairy processing facilities, laundries, canneries, and other indoor wet locations, and in locations where walls are frequently washed or where there are surfaces of absorbent materials, such as damp paper or wood, the entire wiring system, where installed exposed, including all boxes, cabinets, enclosures ~~(other than surrounding fences and walls)~~ , fittings, raceways, and cable used therewith, shall be mounted so that there is at least a 6 mm (¼ in.) airspace between it and the wall or supporting surface.

Exception: Nonmetallic raceways, boxes, and fittings shall be permitted to be installed without the airspace on a concrete, masonry, tile, or similar surface.

Informational Note: In general, areas where acids and alkali chemicals are handled and stored might present such corrosive conditions, particularly when wet or damp. Severe corrosive conditions might also be present in portions of meatpacking plants, tanneries, glue houses, and some stables; in installations immediately adjacent to a seashore and swimming pool areas; in areas where chemical deicers are used; and in storage cellars or rooms for hides, casings, fertilizer, salt, and bulk chemicals.

Statement of Problem and Substantiation for Public Comment

These changes are intended to satisfy the requirements of the NEC Style Manual as it relates to the use of parenthetical language. By indicating that this section does not apply to fences and walls used as enclosures, most of the parenthetical language of this section can be removed. The language about protection from corrosion both inside and outside except at joints can be deleted because it is handled by the product standards of either the fitting (UL 514B) or the wiring methods (such as UL 6). If the corrosion resistance required by the product standards has been removed due to the threads being cut in the field, this section already has requirements that it be applied in the field.

Related Public Comments for This Document

Related Comment	Relationship
Public Comment No. 889-NFPA 70-2024 [Section No. 720.7]	

Related Item

• CN 219

Submitter Information Verification

Submitter Full Name: Ryan Jackson
Organization: Self-employed
Street Address:
City:
State:

Zip:
Submittal Date: Tue Jul 30 12:40:45 EDT 2024
Committee: NEC-P03

Public Comment No. 530-NFPA 70-2024 [Section No. 300.8]

300.8 Protection Against Corrosion and Deterioration.

Raceways, cable trays, cablebus, auxiliary gutters, cable armor, boxes, cable sheathing, cabinets, enclosures (other than surrounding fences and walls), elbows, couplings, fittings, supports, and support hardware shall be of materials suitable for the environment in which they are to be installed.

(A) Ferrous Metal Equipment.

Ferrous metal raceways, cable trays, cablebus, auxiliary gutters, cable armor, boxes, cable sheathing, cabinets, enclosures (other than surrounding fences and walls), elbows, couplings, nipples, fittings, supports, and support hardware shall be suitably protected against corrosion inside and outside (except threads at joints) by a coating of approved corrosion-resistant material. Where corrosion protection is necessary and the conduit is threaded anywhere other than at the factory where the product is listed, the threads shall be coated with an approved electrically conductive, corrosion-resistant compound.

Exception: Stainless steel shall not be required to have protective coatings.

(1) Protected from Corrosion Solely by Enamel.

Where protected from corrosion solely by enamel, ferrous metal raceways, cable trays, cablebus, auxiliary gutters, cable armor, boxes, cable sheathing, cabinets, enclosures (other than surrounding fences and walls), elbows, couplings, nipples, fittings, supports, and support hardware shall not be used outdoors or in wet locations as described in 300.8(D).

(2) Organic Coatings on Boxes or Cabinets.

Where boxes, cabinets, or enclosures (other than surrounding fences and walls) have an approved system of organic coatings and are marked "Raintight," "Rainproof," or "Outdoor Type," they shall be permitted outdoors.

(3) In Concrete or in Direct Contact with the Earth.

Ferrous metal raceways, cable armor, boxes, cable sheathing, cabinets, enclosures (other than surrounding fences and walls), elbows, couplings, nipples, fittings, supports, and support hardware shall be permitted to be installed in concrete, in direct contact with the earth, or in areas subject to severe corrosive influences where made of material approved for the condition or where provided with corrosion protection approved for the condition.

(B) Aluminum Metal Equipment.

Aluminum raceways, cable trays, cablebus, auxiliary gutters, cable armor, boxes, cable sheathing, cabinets, enclosures (other than surrounding fences and walls), elbows, couplings, nipples, fittings, supports, and support hardware embedded or encased in concrete or in direct contact with the earth shall be provided with supplementary corrosion protection.

(C) Nonmetallic Equipment.

Nonmetallic raceways, cable trays, cablebus, auxiliary gutters, boxes, cables with a nonmetallic outer jacket and internal metal armor or jacket, cable sheathing, cabinets, enclosures (other than surrounding fences and walls), elbows, couplings, nipples, fittings, supports, and support hardware shall be made of material approved for the condition and shall comply with 300.8(C)(1) and 300.8(C)(2) as applicable to the specific installation.

(1) Exposed to Sunlight.

Where exposed to sunlight, the materials shall be listed as sunlight resistant or shall be identified as sunlight resistant.

(2) Chemical Exposure.

Where subject to exposure to chemical solvents, vapors, splashing, or immersion, materials or coatings shall either be inherently resistant to chemicals based on their listing or be identified for the specific chemical reagent.

(D) Indoor Wet Locations.

In portions of dairy processing facilities, laundries, canneries, and other indoor wet locations, and in locations where walls are frequently washed or where there are surfaces of absorbent materials, such as damp paper or wood, the entire wiring system, where installed exposed, including all boxes, cabinets, enclosures (other than surrounding fences and walls), fittings, raceways, and cable used therewith, shall be mounted so that there is at least a 6 mm (¼ in.) airspace between it and the wall or supporting surface.

Exception: Nonmetallic raceways, boxes, and fittings shall be permitted to be installed without the airspace on a concrete, masonry, tile, or similar surface.

Informational Note: In general, areas where acids and alkali chemicals are handled and stored might present such corrosive conditions, particularly when wet or damp. Severe corrosive conditions might also be present in portions of meatpacking plants, tanneries, glue houses, and some stables; in installations immediately adjacent to a seashore and swimming pool areas; in areas where chemical deicers are used; and in storage cellars or rooms for hides, casings, fertilizer, salt, and bulk chemicals.

Additional Proposed Changes

File Name	Description	Approved
CN_219.pdf		

Statement of Problem and Substantiation for Public Comment

NOTE: The following CC Note No. 219 appeared in the First Draft Report.

The Correlating Committee directs CMP 3 to reconsider the use of parenthetical text "(other than surrounding fences and walls)" and "(except threads and joints)" in 300.8(A)-(D) as parenthetical expressions create confusion and misunderstanding and shall be avoided. See NEC Style Manual Section 3.5.1.1.

Related Item

• Correlating Committee Note No. 219

Submitter Information Verification

Submitter Full Name: CC Notes
Organization: NEC Correlating Committee
Street Address:
City:

State:
Zip:
Submittal Date: Tue Jul 30 23:15:57 EDT 2024
Committee: NEC-P03

Correlating Committee Note No. 219-NFPA 70-2024 [Section No. 300.8]

Submitter Information Verification

Committee: NEC-AAC
Submittal Date: Thu May 09 13:42:11 EDT 2024

Committee Statement

Committee Statement: The Correlating Committee directs CMP 3 to reconsider the use of parenthetical text “(other than surrounding fences and walls)” and “(except threads and joints)” in 300.8(A)-(D) as parenthetical expressions create confusion and misunderstanding and shall be avoided. See NEC Style Manual Section 3.5.1.1.

Ballot Results

✔ **This item has passed ballot**

12 Eligible Voters
1 Not Returned
11 Affirmative All
0 Affirmative with Comments
0 Negative with Comments
0 Abstention

Not Returned

McDaniel, Roger D.

Affirmative All

Ayer, Lawrence S.
Bowmer, Trevor N.
Hickman, Palmer L.
Holub, Richard A.
Jackson, Peter D.
Kendall, David H.
Manche, Alan
Osborne, Robert D.
Porter, Christine T.
Schultheis, Timothy James
Williams, David A.

Public Comment No. 1254-NFPA 70-2024 [Section No. 300.9(A)]

(A) Condensation.

Where portions of a raceway or sleeve are known to be subjected to different temperatures, and where condensation is known to be a problem, as in cold storage areas of buildings or where passing from the interior to the exterior of a building, the raceway or sleeve shall be comply with 300.9(A)(1) or 300.9(A)(2).

(1) *Sealants.* The raceway or sleeve shall be sealed to prevent the circulation of warm air to a colder section of the raceway or sleeve. Sealants shall be identified for use with cable insulation, conductor insulation, a bare conductor, a shield, or other components. An explosionproof seal shall not be required for this purpose.

(2) *Other Approved Means.* The use of a fitting or other ~~approved~~ listed means identified for the purpose of preventing condensation shall be permitted.

Informational Note: An example of a fitting identified for the prevention of condensation could be a thermal break coupling.

Statement of Problem and Substantiation for Public Comment

Nearly all wiring methods must be listed [3xx.3], and all fittings must be listed [300.17]. The allowance of 300.9(A) item (2) is part of the wiring method and should require listing, not just approval.

Related Item

- FR 8724

Submitter Information Verification

Submitter Full Name: Ryan Jackson
Organization: Self-employed
Affiliation: Steel Tube Institute
Street Address:
City:
State:
Zip:

Submittal Date: Sun Aug 18 17:22:48 EDT 2024
Committee: NEC-P03

Public Comment No. 994-NFPA 70-2024 [Section No. 300.9(A)]

(A) Condensation.

Where portions of a raceway or sleeve are known to be subjected to different temperatures, and where condensation is known to be a problem, as in cold storage areas of buildings or where passing from the interior to the exterior of a building, the raceway or sleeve shall be comply with 300.9(A)(1) or 300.9(A)(2).

(1) *Sealants.* The raceway or sleeve shall be sealed to prevent the circulation of warm air to a colder section of the raceway or sleeve. Sealants shall be identified for use with cable insulation, conductor insulation, a bare conductor, a shield, or other components. An explosionproof seal shall not be required for this purpose.

(2) *Other Approved Means.* The use of a fitting or other approved means identified for the purpose of preventing condensation shall be permitted. The fitting or other approved means shall also prevent the circulation of warm air.

Informational Note: An example of a fitting identified for the prevention of condensation could be a thermal break coupling.

Statement of Problem and Substantiation for Public Comment

While providing a thermal break in the raceway will reduce or eliminate condensation on the raceway, if warm moist air is permitted to circulate through the conduit, there will be internal condensation in cold sections of the raceway and any attached enclosures.

Related Item

• First Revision No. 8724-NFPA 70-2024 • Public Input No. 3942-NFPA 70-2023

Submitter Information Verification

Submitter Full Name: Don Ganiere
Organization: none
Street Address:
City:
State:
Zip:

Submittal Date: Fri Aug 09 14:38:40 EDT 2024
Committee: NEC-P03

Public Comment No. 995-NFPA 70-2024 [Section No. 300.11]

300.11 Raceways in Wet Locations Above Grade.

(A) Where raceways are installed in wet locations above grade, the interior of these raceways shall be considered to be a wet location. Insulated conductors and cables installed in raceways in wet locations above grade shall comply with 310.10(C).

(B) Raceways installed in wet locations above grade shall be arranged to drain.

Statement of Problem and Substantiation for Public Comment

The panel resolved PI #3658 with the statement that the propose language is covered by the requirements of 225.22. However 225.22 does not apply to indoor wet locations. This proposed new language in 300.11 is intended to apply to indoor wet locations. The issue of water ingress and the associated hazards is not specific to outdoor locations as covered in Article 225. The current code language has no requirement that indoor wet location raceways be arranged to drain and it should have such a requirement.

Related Item

- Public Input No. 3658-NFPA 70-2023

Submitter Information Verification

Submitter Full Name: Don Ganiere
Organization: none
Street Address:
City:
State:
Zip:

Submittal Date: Fri Aug 09 14:45:31 EDT 2024
Committee: NEC-P03

Public Comment No. 27-NFPA 70-2024 [Section No. 300.13(B)]

(B) Wiring Systems Installed Above Suspended Ceilings.

Wiring shall not be secured to or supported by the ceiling system, including the ceiling grid support wires. ~~Support~~ Independent support wires and associated fittings that provide secure support and that are installed in addition to the ceiling grid support wires shall be permitted as the sole support. If independent support wires are used, they shall be distinguishable by color, tagging, or other means from those that are part of the ceiling system.

Exception No. 1: The ceiling support system shall be permitted to support wiring and equipment that have been tested as part of the fire-rated assembly.

Informational Note: See ASTM E119, *Standard Test Methods for Fire Tests of Building Construction and Materials*, for one method of testing to determine fire rating.

Exception No. 2: The ceiling system shall be permitted to support branch-circuit wiring and associated equipment if installed in accordance with the ceiling system manufacturer's instructions.

Statement of Problem and Substantiation for Public Comment

This PC proposes to clarify the difference between ceiling grid support wires and independent support wires, and to consistently use the terms throughout.

Related Item

- FR 8755

Submitter Information Verification

Submitter Full Name: Vincent Della Croce
Organization: Siemens
Street Address:
City:
State:
Zip:

Submittal Date: Wed Jul 10 17:10:24 EDT 2024
Committee: NEC-P03

Public Comment No. 373-NFPA 70-2024 [Section No. 300.13(B)]

(B) Wiring Systems Installed Above Suspended Ceilings.

Wiring shall not be secured to or supported by the ceiling system, including the ceiling support wires. Support wires and associated fittings that provide secure support and that are installed in addition to the ceiling grid support wires shall be permitted as the sole support. If independent support wires are used, they shall be distinguishable by color, tagging, or other means from those that are part of the ceiling system and shall be secured at both ends .

Exception No. 1: The ceiling support system shall be permitted to support wiring and equipment that have been tested as part of the fire-rated assembly.

Informational Note: See ASTM E119, *Standard Test Methods for Fire Tests of Building Construction and Materials*, for one method of testing to determine fire rating.

Exception No. 2: The ceiling system shall be permitted to support branch-circuit wiring and associated equipment if installed in accordance with the ceiling system manufacturer's instructions.

Statement of Problem and Substantiation for Public Comment

The change in the first draft was intended to consolidate the two nearly identical requirements into one. During that process, the requirement that the wires be secured at each end was somehow inadvertantly removed. This comment seeks to fix that error.

Related Public Comments for This Document

Related Comment	Relationship
Public Comment No. 898-NFPA 70-2024 [Sections 720.30(B), 720.30(C), 720.30(D)]	

Related Item

- FR 8755

Submitter Information Verification

Submitter Full Name: Ryan Jackson
Organization: Self-employed
Street Address:
City:
State:
Zip:

Submittal Date: Tue Jul 30 12:11:40 EDT 2024
Committee: NEC-P03

Public Comment No. 379-NFPA 70-2024 [Section No. 300.13(C)]

(C) Raceways Used as Means of Support.

Raceways shall only be used as a means of support for other raceways, cables, or nonelectrical equipment under any of the following conditions:

(1) If the raceway or means of support is identified as a means of support

(2) If the raceway contains power supply conductors for electrically controlled equipment and is used to support Class 2 or Class 3 circuit conductors or cables that are solely for the purpose of connection to the equipment control circuits

(3) If the raceway is used to support boxes or conduit bodies in accordance with 314.23 or to support luminaires in accordance with 410.36(E)

(4) If the raceway is used to support an equipment bonding jumper that is associated with the circuit conductors within the raceway

Statement of Problem and Substantiation for Public Comment

Taken literally, the first draft requires that raceways be used to support equipment. Obviosuly the intent is to ALLOW (not REQUIRE) that practice.

Related Item

- FR 8764

Submitter Information Verification

Submitter Full Name: Ryan Jackson
Organization: Self-employed
Street Address:
City:
State:
Zip:

Submittal Date: Tue Jul 30 12:54:52 EDT 2024
Committee: NEC-P03

Public Comment No. 826-NFPA 70-2024 [New Section after 300.13(D)]

(E) Cable Ties Used as Means of Securement and Support.

Cable ties used as a means for securement and support for cable, flexible conduit, and flexible tubing shall be listed and identified for securement and support. If a cable tie fixing device is installed, the cable tie fixing device shall be listed and identified for securement and support. Cable ties shall not be permitted to be

installed around framing members.

Informational Note No. 1: A separate cable tie fixing device or a cable tie integral device may be necessary for installation. Cable Tie fixing devices may not be required for all support and securement applications.

Informational Note No. 2: See ANSI/UL 62275, Cable Management Systems-Cable Ties for Electrical Installations, for Type designations and additional information.

Informational Note No. 3: The following are cable tie and cable tie fixing device Type designations:

Type(s) 1, 11, 2, 21, 2S, or 21S are evaluated for use in cable management applications.

Type(s) 2S or 21S are also evaluated for securing and supporting cable, flexible conduit, and flexible tubing

Statement of Problem and Substantiation for Public Comment

This public comment asks CMP-3 to reconsider Public Input No. 3409 for the following reasons:
1. First Revisions No. 8962, 8963, and 8966 has added a new definition for “cable tie,” “cable tie fixing device,” and “cable tie integral device,” respectfully, for the purposes of correlation with 300.13(E). The requirements and informational notes in 300.13(E) are essential for the proper installation of cable ties required elsewhere in the code.

2. Sections 722.24 (FR-8340), 724.24 (FR-8361), and 760.24 (FR-8460) have all been deleted from the first draft. And while the revised 722.24(A) and new Article 790 point the user to 300.13, there is no language that clearly states that cable ties need to be listed and identified for securement and support in that section. A new 300.13(E) is needed to correct this.

3. As stated in the Public Input, a new 300.13(E) addresses concerns over the proper installation and use of cable ties when used as a means as securement and support of cable, flexible conduit, and flexible tubing. The proposed text will provide clarity on the proper installation and use of cable ties and cable tie fixing devices where these products are used as a means of securement and support. Cable ties are not evaluated for securement and support when wrapped around a framing member.

Some cable ties require the installation and use of a cable tie fixing device to properly secure and support the installed wiring method to the building structure or mounting surface, and some do not, and this guidance is provided in Informational Note: 1. Additional Information Notes provide guidance to the UL 62275 Standard requirements for cable ties and cable tie fixing devices, and the Types of cable ties and cable tie fixing devices that are identified for securement and support.

Related Item

• PI 3409

Submitter Information Verification

Submitter Full Name: Megan Hayes
Organization: NEMA
Street Address:
City:
State:
Zip:

Submittal Date: Mon Aug 05 19:02:36 EDT 2024
Committee: NEC-P03

Public Comment No. 1393-NFPA 70-2024 [Section No. 300.19]

300.19 Number of Conductors and Cables in Raceway.

(A) Raceway Fill

The number and size of conductors and cables in a complete raceway shall not exceed the allowable percentage fill specified in Chapter 9, Table 1.

(B) Metric Designators and Trade Sizes

Metric designators and trade sizes for conduit, tubing and associated fittings and accessories shall be in accordance with Table 300.19(B).

Statement of Problem and Substantiation for Public Comment

Relocating this requirement and table to 300.19(B) from 300.1(C) is more user friendly and a better location for requiring conduits, tubing, and associated fittings and accessories to be in accordance with the table for metric designators and trade sizes.

Related Public Comments for This Document

Related Comment	Relationship
Public Comment No. 1392-NFPA 70-2024 [Section No. 300.1(C)]	
Public Comment No. 1394-NFPA 70-2024 [Section No. 305.1(C)]	
Public Comment No. 1396-NFPA 70-2024 [Section No. 305.27]	
Public Comment No. 1392-NFPA 70-2024 [Section No. 300.1(C)]	
Public Comment No. 1394-NFPA 70-2024 [Section No. 305.1(C)]	
Public Comment No. 1396-NFPA 70-2024 [Section No. 305.27]	

Related Item

- FR-8622

Submitter Information Verification

Submitter Full Name: David Hittinger
Organization: Independent Electrical Contractors
Affiliation: IEC Codes and Standards
Street Address:
City:
State:
Zip:

Submittal Date: Wed Aug 21 22:02:16 EDT 2024
Committee: NEC-P03

Public Comment No. 862-NFPA 70-2024 [Section No. 300.19]

300.~~19~~ ~~Number of Conductors and Cables in Raceway.~~ **~~19 Raceway Sizes and Fill~~** :

(A) Raceway Fill. The number and size of conductors and cables in a complete raceway shall not exceed the allowable percentage fill specified in Chapter 9, Table 1.

(B) Metric Designators and Trade Sizes. Metric designators and trade sizes for conduit, tubing, and associated fittings and accessories shall be in accordance with Table 300.19(B) .

[Relocate Table 300.1(C) here and retitle it Table 300.19(B), leave its contents unchanged]

Statement of Problem and Substantiation for Public Comment

This material probably never should have been located within the scope of Article 300. See companion public comment to 300.1.

Related Public Comments for This Document

Related Comment	Relationship
Public Comment No. 863-NFPA 70-2024 [Section No. 300.1]	

Related Item

- FCR 149

Submitter Information Verification

Submitter Full Name: Ryan Jackson
Organization: Self-employed
Street Address:
City:
State:
Zip:

Submittal Date: Tue Aug 06 17:25:08 EDT 2024
Committee: NEC-P03

Public Comment No. 1625-NFPA 70-2024 [Section No. 300.24]

300.24 Bends.

The total degree of bends in any combination of conduit and tubing wiring methods used for a single run shall not exceed 360 degrees between pull points.

Statement of Problem and Substantiation for Public Comment

The current language applies a 360 degree limit to cable wiring methods and there is no reason to do that as conductors are not pulled into cable wiring methods. The Public Comment language will limit this rule to conduit and tubing wiring methods...the only wiring methods that have a limit of 360 degrees of bends between pull points.

Related Item

- First Revision No. 8839-NFPA 70-2024

Submitter Information Verification

Submitter Full Name: Don Ganiere
Organization: none
Street Address:
City:
State:
Zip:

Submittal Date: Sun Aug 25 12:07:54 EDT 2024
Committee: NEC-P03

Public Comment No. 306-NFPA 70-2024 [Section No. 300.24]

300.24 Bends.

The total degree of bends in any combination of raceway wiring methods used for a single run shall not exceed 360 degrees between pull points.

Statement of Problem and Substantiation for Public Comment

This language is not expected to limit the number of bends in cable trays, or other wiring support methods like wireways, or cablebus since the cables may be placed into those other support methods rather than pulled into them. Comments were expressed in balloting of this item in the First Draft, but this needs to be clarified accordingly.

Related Item

- FR-8839

Submitter Information Verification

Submitter Full Name: Richard Holub
Organization: The DuPont Company, Inc.
Street Address:
City:
State:
Zip:

Submittal Date: Mon Jul 29 10:44:33 EDT 2024
Committee: NEC-P03

Public Comment No. 360-NFPA 70-2024 [Section No. 300.24]

300.24 Bends.

The total degree of bends in any combination of ~~wiring methods~~ circular raceways used for a single run shall not exceed 360 degrees between pull points.

Statement of Problem and Substantiation for Public Comment

The target of this change was circular raceways, but as written it applies to all wiring methods. This means that a cable wiring method is limited to 360 degrees of bends, although the conductors could never be removed or reinserted. It also applies to wireways, cablebus, strut-channel, messenger-supported wiring, and many other applications that could not reasonably be expected to comply with this section.

Related Public Comments for This Document

Related Comment	Relationship
Public Comment No. 897-NFPA 70-2024 [Section No. 720.24]	

Related Item

- FR 8839

Submitter Information Verification

Submitter Full Name: Ryan Jackson
Organization: Self-employed
Street Address:
City:
State:
Zip:

Submittal Date: Tue Jul 30 11:31:57 EDT 2024
Committee: NEC-P03

Public Comment No. 531-NFPA 70-2024 [Section No. 300.24]

300.24 Bends.

The total degree of bends in any combination of wiring methods used for a single run shall not exceed 360 degrees between pull points.

Additional Proposed Changes

File Name	Description	Approved
CN_220.pdf		

Statement of Problem and Substantiation for Public Comment

NOTE: The following CC Note No. 220 appeared in the First Draft Report on First Revision No. 8839.

The Correlating Committee advises CMP 3 to reconsider the language created in FR 8839 limiting any combination of wiring methods to 360 degrees, including cable wiring methods.

Related Item

- First Revision No. 8839

Submitter Information Verification

Submitter Full Name: CC Notes
Organization: NEC Correlating Committee
Street Address:
City:
State:
Zip:

Submittal Date: Tue Jul 30 23:17:28 EDT 2024
Committee: NEC-P03

Correlating Committee Note No. 220-NFPA 70-2024 [Section No. 300.24]

Submitter Information Verification

Committee: NEC-AAC
Submittal Date: Thu May 09 13:44:37 EDT 2024

Committee Statement

Committee Statement: The Correlating Committee advises CMP 3 to reconsider the language created in FR 8839 limiting any combination of wiring methods to 360 degrees, including cable wiring methods.

First Revision No. 8839-NFPA 70-2024 [New Section after 300.23]

Ballot Results

✔ **This item has passed ballot**

12 Eligible Voters
1 Not Returned
10 Affirmative All
1 Affirmative with Comments
0 Negative with Comments
0 Abstention

Not Returned

McDaniel, Roger D.

Affirmative All

Ayer, Lawrence S.
Bowmer, Trevor N.
Hickman, Palmer L.
Jackson, Peter D.
Kendall, David H.
Manche, Alan
Osborne, Robert D.
Porter, Christine T.
Schultheis, Timothy James
Williams, David A.

Affirmative with Comment

Holub, Richard A.

The comments expressed in balloting of the First Draft should be considered here for clarification in the Second Draft.

Public Comment No. 1626-NFPA 70-2024 [Section No. 300.25(C)(1)]

(1) Wiring Methods.

The wiring methods for other spaces used for environmental air shall be limited to ~~totally~~ :

(1) Totally enclosed, nonventilated, insulated busway having no provisions for plug-in connections,

(2) Rigid metal conduit without an overall nonmetallic covering,

(3) Intermediate metal conduit without an overall nonmetallic covering,

(4) Electrical metallic conduit without an overall nonmetallic covering,

(5) Type MI cable without an overall nonmetallic covering,

(6) Type MC cable without an overall nonmetallic covering,

(7) Type AC cable, or other factory-assembled multiconductor control or power cable that is specifically listed for use within an air-handling space, or listed prefabricated cable assemblies of metallic manufactured wiring systems without nonmetallic sheath.

Other types of cables, conductors, and raceways shall be permitted to be installed in ~~electrical metallic tubing, flexible metallic tubing, intermediate metal conduit, rigid metal conduit without an overall nonmetallic covering, flexible metal conduit,~~ any of the above wiring methods or, where accessible, in surface metal raceway or metal wireway with metal covers.

Nonmetallic cable ties and other nonmetallic cable accessories used to secure and support cables shall be listed as having low smoke and heat release properties.

Informational Note: See UL 2043, *Fire Test for Heat and Visible Smoke Release for Discrete Products and Their Accessories Installed in Air-Handling Spaces*, for one method of testing low smoke and heat release properties for nonmetallic cable ties and other nonmetallic cable accessories to determine a maximum peak optical density of 0.50 or less, an average optical density of 0.15 or less, and a peak heat release rate of 100 kW or less.

Statement of Problem and Substantiation for Public Comment

Breaking the rule up into a list format improves the usability of the code. The added language "without an overall nonmetallic covering" clarifies that none of the permitted wiring methods can have an outer nonmetallic covering. The current rule only prohibits RMC from having an outer nonmetallic covering.

Related Item

- Public Input No. 3142-NFPA 70-2023

Submitter Information Verification

Submitter Full Name: Don Ganiere
Organization: none
Street Address:
City:
State:
Zip:

Submittal Date: Sun Aug 25 12:16:04 EDT 2024
Committee: NEC-P03

Public Comment No. 1685-NFPA 70-2024 [Section No. 300.25(C)(1)]

(1) Wiring Methods.

The wiring methods for other spaces used for environmental air shall be limited to totally enclosed, nonventilated, insulated busway having no provisions for plug-in connections, Type MI cable without an overall nonmetallic covering, Type MC cable without an overall nonmetallic covering, Type AC cable, or Flexible Bus Systems and other factory-assembled multiconductor control or power ~~cable~~ cables that ~~is specifically~~ are specifically listed for use within an air-handling space, or listed prefabricated cable assemblies of metallic manufactured wiring systems without nonmetallic sheath. Other types of cables, conductors, and raceways shall be permitted to be installed in electrical metallic tubing, flexible metallic tubing, intermediate metal conduit, rigid metal conduit without an overall nonmetallic covering, flexible metal conduit, or, where accessible, surface metal raceway or metal wireway with metal covers.

Nonmetallic cable ties and other nonmetallic cable accessories used to secure and support cables shall be listed as having low smoke and heat release properties.

Informational Note: See UL 2043, *Fire Test for Heat and Visible Smoke Release for Discrete Products and Their Accessories Installed in Air-Handling Spaces*, for one method of testing low smoke and heat release properties for nonmetallic cable ties and other nonmetallic cable accessories to determine a maximum peak optical density of 0.50 or less, an average optical density of 0.15 or less, and a peak heat release rate of 100 kW or less.

Statement of Problem and Substantiation for Public Comment

This change is submitted for correlation to related changes proposed in Article 371 to permit flexible bus systems to be installed in spaces used for air handling where it is listed and identified for use in these spaces. CMP-8 had resolved the public inputs in the first draft stage primarily due to the conflict with the present UL requirements for this product. No other technical reasoning was provided in the panel statement.

A project has been initiated with UL to revised UL 1386 and UL 1387 covering Flexible Insulated Bus and Flexible Bus Systems to add the flame testing requirements that would permit flexible bus systems to be installed in air handling spaces where it is specifically listed and identified for this application.

The location of the added “Flexible Bus Systems” in the text, along with the accompanying editorial changes, is to provide clarity that the flexible bus system as well as the existing allowance for factory-assembled multiconductor control and power cables both are to require having the listing and markings for suitability to install in air handling spaces.

Related Item

• PI 4459, 4463 • PC 1687, 1696, 1692

Submitter Information Verification

Submitter Full Name: Ward Judson
Organization: nVent Electric
Street Address:
City:
State:
Zip:

Submittal Date: Mon Aug 26 11:54:04 EDT 2024
Committee: NEC-P03

Public Comment No. 1982-NFPA 70-2024 [Section No. 300.25(C)(1)]

(1)

~~Wiring~~

Wiring Methods.

The wiring methods for other spaces used for environmental air shall be limited to

~~totally enclosed~~

:

(1) Totally enclosed , nonventilated, insulated busway having no provisions for plug-in connections,

(2) Rigid metal conduit without an overall nonmetallic covering,

(3) Intermediate metal conduit without an overall nonmetallic covering,

(4) Electrical metallic conduit without an overall nonmetallic covering,

(5) Type MI cable without an overall nonmetallic covering,

(6) Type MC cable without an overall nonmetallic covering,

(7) Type AC cable, or other factory-assembled multiconductor control or power cable that is specifically listed for use within an air-handling space, or listed prefabricated cable assemblies of metallic manufactured wiring systems without nonmetallic sheath.

Other types of cables, conductors, and raceways shall be permitted to be installed in electrical metallic tubing, flexible metallic tubing, intermediate metal conduit, rigid metal conduit

~~without~~

, flexible metal conduit, (all without an overall nonmetallic covering, flexible metal conduit,

~~or~~

) or , where accessible, surface metal raceway or metal wireway with metal covers.

Nonmetallic cable ties and other nonmetallic cable accessories used to secure and support cables shall be listed as having low smoke and heat release properties.

Informational Note:

~~See~~

See UL 2043, *Fire Test for Heat and Visible Smoke Release for Discrete Products and Their Accessories Installed in Air-Handling Spaces* , for one method of testing low smoke and heat release properties for nonmetallic cable ties and other nonmetallic cable accessories to determine a maximum peak optical density of 0.50 or less, an average optical density of 0.15 or less, and a peak heat release rate of 100 kW or less.

Statement of Problem and Substantiation for Public Comment

The Panel should reconsider and accept PI 1982. it does not change any of the requirements, but makes the provisions easier to understand. Accepting this revision also complies with Sections 3.5.1.1 and 3.5.2 of the NEC Style Manual favoring lists over long, complicated sentences. The present language in the first sentence states that wiring methods are limited to certain types. But the second sentence says that certain raceways are suitable for enclosing other types of conductors, implying that those raceways are not considered to be wiring methods. Lastly, it clarifies that none of the metallic raceways are permitted to have a nonmetallic covering, which per recognized English wording and punctuation is currently only prohibited on rigid metal conduit.

Related Item

• PI 1982

Submitter Information Verification

Submitter Full Name: Joseph Andre
Organization: Consultant
Affiliation: Steel Tube Institute
Street Address:
City:
State:
Zip:

Submittal Date: Wed Aug 28 14:01:20 EDT 2024
Committee: NEC-P03

Public Comment No. 1236-NFPA 70-2024 [Section No. 300.28]

~~**300.28** Remote-Control and Signaling Circuits Classification.~~

~~Remote-control and signaling circuits shall be classified as either power-limited or non-power-limited and comply with 300.28(A) through 300.28(C) :~~

~~**(A)** Class 1 Power-Limited Remote-Control and Signaling Circuits.~~

~~Class 1 power-limited remote-control and signaling circuits shall comply with 790.4 through 790.8 and 794.4 :~~

~~**(B)** Class 2 and Class 3 Power-Limited Remote-Control and Signaling Circuits.~~

~~Class 2 and Class 3 power-limited remote-control and signaling circuits shall comply with 790.4 through 790.8 and 794.4 :~~

~~**(C)** Non-Power-Limited Remote-Control and Signaling Circuits.~~

~~Non-power-limited remote-control and signaling circuits shall be installed in accordance with 300.4 through 300.27 and comply with 300.28(C)(1) through 300.28(C)(3) :~~

~~**(1)** Sizes and Use.~~

(a) ~~Conductors that are 18 AWG and 16 AWG copper shall be permitted to be used if they supply loads that do not exceed the ampacities specified in 402.5 and are installed in a raceway, an approved enclosure, or a listed cable.~~

(b) ~~Conductors that are 14 AWG copper-clad aluminum shall be permitted to be used in Type MC cable and Type TC cable. The continuous load shall not exceed 8 amperes.~~

(c) ~~Conductors larger than 16 AWG copper or 14 AWG copper-clad aluminum shall not supply loads greater than the ampacities specified in 310.14 .~~

(d) ~~Flexible cords shall comply with the applicable general requirements, applications, and construction specifications for flexible cords and flexible cables in accordance with Article 400 Parts I and II.~~

~~**(2)** Insulation.~~

(a) ~~Insulation on conductors shall be rated for the system voltage and not less than 600 volts.~~

(b) ~~Conductors larger than 16 AWG copper or 14 AWG copper-clad aluminum shall comply with the applicable general requirements for conductors rated up to and including 2000 volt for type designations, insulations, markings, ampacity ratings, and uses in accordance with 310.3 , 310.4 , 310.6 , 310.8 , 310.10 , and 310.14 .~~

(c) ~~Conductors that are 18 AWG copper, 16 AWG copper, or 14 AWG copper-clad aluminum shall be Type FFH-2, Type KF-2, Type KFF-2, Type PAF, Type PAFF, Type PF, Type PFF, Type PGF, Type PGFF, Type PTF, Type PTFF, Type RFH-2, Type RFHH-2, Type RFHH-3, Type SF-2, SFF-2, Type TF, Type TFF, Type TFFN, Type TFN, Type ZF, or Type ZFF.~~

(d) ~~Conductors with other types and thicknesses of insulation shall be permitted if listed for Class 1 circuit use.~~

~~**(3)** Overcurrent Protection.~~

(a) ~~Overcurrent protection for conductors 14 AWG copper and larger shall be provided in accordance with the conductor ampacity, without applying the ampacity adjustment and correction factors specified in 310.15 to the ampacity calculation.~~

(b) ~~Overcurrent protection shall not exceed 7 amperes for 18 AWG copper conductors and 10 amperes for 16 AWG copper and 14 AWG copper-clad aluminum.~~

~~*Exception: The overcurrent protection specified in 300.28(C)(3)(a) and 300.28(C)(3)(b) shall not be required where this Code requires or permits other overcurrent protection ratings.*~~

Statement of Problem and Substantiation for Public Comment

The contents of this section were revised and relocated to the new Article 206. This section was intended to be deleted as a result of that move.

Related Item

- FR 8811

Submitter Information Verification

Submitter Full Name: Ryan Jackson
Organization: Self-employed
Street Address:
City:
State:
Zip:

Submittal Date: Sun Aug 18 12:36:55 EDT 2024
Committee: NEC-P03

Public Comment No. 47-NFPA 70-2024 [New Section after 335.120]

335.126 Hazardous (Classified) Locations.

Where required to be marked ITC-HL, the cable shall be listed and shall have a gas/vapor tight continuous corrugated metallic sheath and an overall jacket of suitable polymeric material.

Statement of Problem and Substantiation for Public Comment

The wiring method ITC-HL has not been included in the wiring method Article 335, despite being included in hazardous location sections 501.10(A)(1)(5), 502.10(A)(1)(5), 505.15(B)(1)(3), and 506.15(A)(4), as well as within the product standard UL 2225 Cables and Cable-Fittings for use in Hazardous (Classified) Locations. The other cables within this standard, MC-HL and TC-ER-HL, both have a Hazardous (Classified) Location section within their respective articles, 330.126 (per FR 8022) for MC-HL and 336.126 (per FR8114) for TC-ER-HL. While this public comment is addressing a section that was not modified during the Public Input stage, and therefore may be deemed new material, there is justification citing the Style Manual calling for parallel construction between articles (2023 NEC Style Manual, Clause 3.5.5) to include this addition in the public comments stage.

Related Item

- FR-8022-NFPA 70-2024 Section renumbering for MC-HL from 330.130 to 330.126
- FR-8114-NFPA 70-2024 Section renumbering for TC-ER-HL from 336.130 to 336.126

Submitter Information Verification

Submitter Full Name: Eddie Ramirez
Organization: FM Global
Street Address:
City:
State:
Zip:

Submittal Date: Fri Jul 12 07:46:52 EDT 2024
Committee: NEC-P03

Public Comment No. 1192-NFPA 70-2024 [Article 590]

~~**Article 590** Temporary Installations~~

~~**590.1** Scope.~~

~~The provisions of this article apply to temporary electric power and lighting installations.~~

~~**590.2** Listing of Decorative Lighting.~~

~~Decorative lighting used for holiday lighting and similar purposes, in accordance with 590.5(B) , shall be listed and shall be labeled on the product.~~

~~**590.4** All Wiring Installations.~~

~~**(A)** Other Articles.~~

~~Except as specifically modified in this article, all other requirements of this code for permanent wiring shall apply to temporary wiring installations.~~

~~**(B)** Approval.~~

~~Temporary wiring methods shall be acceptable only if approved based on the conditions of use and any special requirements of the temporary installation.~~

~~**590.5** Time Constraints.~~

~~**(A)** During the Period of Construction.~~

~~Temporary electric power and lighting installations shall be permitted during the period of construction, remodeling, maintenance, repair, or demolition of buildings, structures, equipment, or similar activities.~~

~~**(B)** 90 Days.~~

~~Temporary electric power and lighting installations shall be permitted for a period not to exceed 90 days for holiday decorative lighting and similar purposes.~~

~~**(C)** Emergencies and Tests.~~

~~Temporary electric power and lighting installations shall be permitted during emergencies and for tests, experiments, and developmental work.~~

~~**(D)** Removal.~~

~~Temporary wiring shall be removed immediately upon completion of construction or purpose for which the wiring was installed.~~

~~**590.6** General.~~

~~**(A)** Feeders.~~

~~Overcurrent protection shall be provided in accordance with 240.4 , 240.5 , 245.26 , 445.12 , and 445.13 , as applicable. Conductors shall be permitted within cable assemblies or within multiconductor cords or cables of a type identified in Table 400.4 for hard usage or extra-hard usage. For the purpose of this section, the following wiring methods shall be permitted:~~

(1) ~~Type NM, Type NMC, and Type SE cables shall be permitted to be used in any dwelling, building, or structure without any limitation by building construction type and without concealment within walls, floors, or ceilings.~~

(2) ~~Type SE cable shall be permitted to be installed in a raceway in an underground installation.~~

~~*Exception: Single insulated conductors shall be permitted where installed for the purpose(s) specified in 590.5(C) and accessible only to qualified persons.*~~

~~**(B)** Branch Circuits.~~

~~All branch circuits shall originate in an approved power outlet, switchgear, switchboard or enclosed panelboard, motor control center, or fused switch enclosure. Conductors shall be permitted within cable assemblies or within multiconductor cord or cable of a type identified in Table 400.4 for hard usage or extra-hard usage. Conductors shall be protected from overcurrent as provided in 240.4 , 240.5 , and 245.26 , as applicable. For the purposes of this section, the following wiring methods shall be permitted:~~

(1) ~~Type NM, Type NMC, and Type SE cables shall be permitted to be used in any dwelling, building, or structure without any limitation by building construction type and without concealment within walls, floors, or ceilings.~~

(2) ~~Type SE cable shall be permitted to be installed in a raceway in an underground installation.~~

~~*Exception: Branch circuits installed for the purposes specified in 590.5(B) or 590.5(C) shall be permitted to be run as single insulated conductors. Where the wiring is installed in accordance with 590.5(B) , the voltage to ground shall not exceed 150 volts, the wiring shall not be subject to physical damage, and the conductors shall be supported on insulators at intervals of not more than 3.0 m (10 ft); or, for festoon lighting, the conductors shall be so arranged that excessive strain is not transmitted to the lampholders.*~~

~~**(C)** Receptacles.~~

~~All receptacles shall be of the grounding type. Unless installed in a continuous metal raceway that qualifies as an equipment grounding conductor in accordance with 250.118 or a continuous metal-covered cable that qualifies as an equipment grounding conductor in accordance with 250.118 , all branch circuits shall include a separate equipment grounding conductor, and all receptacles shall be electrically connected to the equipment grounding conductor(s). Receptacles on construction sites shall not be installed on any branch circuit that supplies temporary lighting.~~

~~**(D)** Disconnecting Means.~~

~~Suitable disconnecting switches or plug connectors shall be installed to permit the disconnection of all ungrounded conductors of each temporary circuit. Multiwire branch circuits shall be provided with a means to disconnect simultaneously all ungrounded conductors at the power outlet or panelboard where the branch circuit originated. Identified handle ties shall be permitted.~~

~~**(E)** Lamp Protection.~~

~~All lamps for general illumination shall be protected from accidental contact or breakage by a guard.~~

~~Metal guards of lampholders and metal guards secured to conductive enclosure parts shall be connected to the circuit equipment grounding conductor.~~

~~*Exception: A guard shall not be required for nonreplaceable LED lamps integral to a listed temporary lighting string.*~~

(F) Splices.

A box, conduit body, or other enclosure with a cover installed shall be required for all splices.

Exception No. 1: On construction sites, a box, conduit body, or other enclosure shall not be required for either of the following conditions:

(1) The circuit conductors being spliced are all from nonmetallic multiconductor cord or cable assemblies, provided that the equipment grounding continuity is maintained with or without the box.

(2) The circuit conductors being spliced are all from metal-sheathed cable assemblies terminated in listed fittings that mechanically secure the cable sheath to maintain effective electrical continuity.

Exception No. 2: On construction sites, branch-circuits that are permanently installed in framed walls and ceilings and are used to supply temporary power or lighting,and that are GFCI protected, the following shall be permitted:

(1) A box cover shall not be required for splices installed completely inside of junction boxes , outlet boxes, or device boxes.

(2) Listed pigtail-type lampholders shall be permitted to be installed in ceiling-mounted junction boxes , outlet boxes, or device boxes.

(3) Finger safe devices shall be permitted for supplying and connection of devices.

(G) Protection from Accidental Damage.

Flexible cords and cables shall be protected from accidental damage. Sharp corners and projections shall be avoided. Where passing through doorways or other pinch points, protection shall be provided to avoid damage.

(H) Termination(s) at Devices.

Flexible cords and cables entering enclosures containing devices requiring termination shall be secured to the box with fittings listed for connecting flexible cords and cables to boxes designed for the purpose.

(I) Support.

(1) Protection from Physical Damage.

Cable assemblies and flexible cords and cables shall be supported in place at intervals that ensure that they will be protected from physical damage. Support shall be in the form of staples, cable ties, straps, or similar type fittings installed so as not to cause damage.

(2) Cords and Cables.

Cable assemblies and flexible cords and cables installed as branch circuits or feeders shall not be installed on the floor or on the ground. Extension cords shall not be required to comply with 590.6(I) .

(3) Vegetation Not Used for Support.

Vegetation shall not be used for support of overhead spans of branch circuits or feeders.

Exception: For holiday lighting in accordance with 590.5(B) , where the conductors or cables are arranged with strain relief devices, tension take-up devices, or other approved means to avoid damage from the movement of the live vegetation, trees shall be permitted to be used for support of overhead spans of branch-circuit conductors or cables.

590.7 Ground-Fault Protection for Personnel.

Ground-fault protection for personnel for all temporary wiring installations shall be provided to comply with 590.7(A) and 590.7(B) . This section shall apply only to temporary wiring installations used to supply temporary power to equipment used by personnel during construction, remodeling, maintenance, repair, or demolition of buildings, structures, equipment, or similar activities. This section shall apply to power derived from an electric utility company or from an on-site-generated power source.

(A) Receptacle Outlets.

Temporary receptacle installations used to supply temporary power to equipment used by personnel during construction, remodeling, maintenance, repair, or demolition of buildings, structures, equipment, or similar activities shall comply with the requirements of 590.7(A)(1) through 590.7(A)(3) , as applicable.

Exception: In industrial establishments only, where conditions of maintenance and supervision ensure that only qualified personnel are involved, an assured equipment grounding conductor program as specified in 590.7(B)(2) shall be permitted for only those receptacle outlets used to supply equipment that would create a greater hazard if power were interrupted or having a design that is not compatible with GFCI protection.

(1) Receptacle Outlets Not Part of Permanent Wiring.

All 125-volt, single-phase, 15-, 20-, and 30-ampere receptacle outlets that are not a part of the permanent wiring of the building or structure and that are in use by personnel shall have GFCI protection for personnel.

(2) Receptacle Outlets Existing or Installed as Permanent Wiring.

Ground-fault circuit-interrupter protection for personnel shall be provided for all 125-volt, single-phase, 15-, 20-, and 30-ampere receptacle outlets installed or existing as part of the permanent wiring of the building or structure and used for temporary electric power.

Exception: A listed cord set or device incorporating listed GFCI protection for personnel and identified for portable use shall be permitted for compliance with this section.

(3) Receptacles on 15-kW or less Portable Generators.

All 125-volt and 125/250-volt, single-phase, 15-, 20-, and 30-ampere receptacle outlets that are a part of a 15-kW or smaller portable generator shall have listed ground-fault circuit-interrupter protection for personnel. All 15- and 20-ampere, 125- and 250-volt receptacles, including those that are part of a portable generator, used in a damp or wet location shall comply with 406.9(A) and 406.9(B) .

Exception: A listed cord set or device incorporating listed GFCI protection for personnel and identified for portable use shall be permitted for compliance with this section where the portable generator was manufactured or remanufactured prior to January 1, 2015.

(B) Other Receptacle Outlets.

For temporary wiring installations, receptacles, other than those covered by 590.7(A)(1) through 590.7(A)(3) used to supply temporary power to equipment used by personnel during construction, remodeling, maintenance, repair, or demolition of buildings, structures, or equipment, or similar activities, shall have protection in accordance with 590.7(B)(1) or the assured equipment grounding conductor program in accordance with 590.7(B)(2) .

(1) GFCI Protection.

Ground-fault circuit-interrupter protection for personnel.

~~**(2)** Assured Equipment Grounding Conductor Program.~~

~~A written assured equipment grounding conductor program continuously enforced at the site by one or more designated persons to ensure that equipment grounding conductors for all cord sets, receptacles that are not a part of the permanent wiring of the building or structure, and equipment connected by cord and plug are installed and maintained in accordance with the applicable requirements of 250.114 , 250.138 , 406.12(C) , and 590.6(C) :~~

(1) ~~The following tests shall be performed on all cord sets, receptacles that are not part of the permanent wiring of the building or structure, and cord-and-plug-connected equipment required to be connected to an equipment grounding conductor:~~

(2) ~~All equipment grounding conductors shall be tested for continuity and shall be electrically continuous.~~

(3) ~~Each receptacle and attachment plug shall be tested for correct attachment of the equipment grounding conductor. The equipment grounding conductor shall be connected to its proper terminal.~~

(4) ~~All required tests shall be performed as follows:~~

(5) ~~Before first use on site~~

(6) ~~When there is evidence of damage~~

(7) ~~Before equipment is returned to service following any repairs~~

(8) ~~At intervals not exceeding 3 months~~

(9) ~~The tests required in 590.7(B)(2)(a) shall be recorded and made available to the authority having jurisdiction.~~

~~The assured equipment grounding conductor program shall be documented and made available to the authority having jurisdiction.~~

~~Informational Note: See OSHA 29 CFR 1910 and 1926 for requirements for assured equipment grounding conductor programs. See NFPA *70E* - 2024, *Standard for Electrical Safety in the Workplace* , for additional information.~~

~~**590.8** Guarding.~~

~~For wiring over 600 volts, nominal, suitable fencing, barriers, or other effective means shall be provided to limit access only to authorized and qualified personnel.~~

~~**590.9** Overcurrent Protective Devices.~~

~~**(A)** Where Reused.~~

~~Overcurrent protective devices that have been previously used and are installed in a temporary installation shall be examined to ensure they have been properly installed and properly maintained and there is no evidence of impending failure.~~

~~Informational Note: See the following standards for further information for properly maintained equipment:~~

(1) ~~NEMA AB 4, *Guidelines for Inspection and Preventive Maintenance of Molded-Case Circuit Breakers Used in Commercial and Industrial Applications*~~

(2) ~~NFPA 70B-2023, *Standard for Electrical Equipment Maintenance*~~

(3) ~~NEMA GD 1, *Evaluating Water-Damaged Electrical Equipment*~~

(4) ~~IEEE 1458, *IEEE Recommended Practice for the Selection, Field Testing, and Life Expectancy of Molded-Case Circuit Breakers for Industrial Applications*~~

~~**(B)** Service Overcurrent Protective Devices.~~

~~Overcurrent protective devices for solidly grounded wye electrical services of more than 150 volts to ground but not exceeding 1000 volts phase-to-phase, available fault current greater than 10,000 amperes, shall be current limiting.~~

Statement of Problem and Substantiation for Public Comment

Article 590 should be relocated to Chapter 1. CMP 3 resolved PI 1639 because the proposed relocation to Chapter 2 would not resolve the problem of where to locate temporary wiring requirements. The last sentence of the panel statement stated the new structuring for the 2029 NEC would find an appropriate location. Moving to Chapter 1 for the 2026 NEC will help facilitate this endeavor.

Related Item

• PI-1639

Submitter Information Verification

Submitter Full Name: David Hittinger
Organization: Independent Electrical Contractors
Affiliation: IEC Codes and Standards
Street Address:
City:
State:
Zip:

Submittal Date: Fri Aug 16 22:44:09 EDT 2024
Committee: NEC-P03

Public Comment No. 382-NFPA 70-2024 [Section No. 590.7(A)(3)]

(3) Receptacles on 15-kW or less Portable Generators.

All 125-volt and 125/250-volt, single-phase, 15-, 20-, and 30-ampere receptacle outlets that are a part of a 15-kW or smaller portable generator shall have listed ground-fault circuit-interrupter protection for personnel. All ~~15- and 20-ampere, 125- and 250-volt~~ receptacles, including those that are part of a portable generator, used in a damp or wet location shall comply with 406.9(A) and 406.9(B).

Exception: A listed cord set or device incorporating listed GFCI protection for personnel and identified for portable use shall be permitted for compliance with this section ~~where~~ if the portable generator was manufactured or remanufactured prior to January 1, 2015.

Statement of Problem and Substantiation for Public Comment

As of the 2023 NEC, section 406.9(B) applies to all receptacles, regardless of their current rating. I do not beleive it is the intent of this section to modify that requirement, as FR 8882 deletes all reference to that section and allows 90.3 to handle the matter.

Related Item

- FR 8896

Submitter Information Verification

Submitter Full Name: Ryan Jackson
Organization: Self-employed
Street Address:
City:
State:
Zip:

Submittal Date: Tue Jul 30 13:19:33 EDT 2024
Committee: NEC-P03

Public Comment No. 1619-NFPA 70-2024 [Article 720]

Article 720 General Requirements for Limited-Energy System Wiring Methods and Materials

Part I. General

720.1 Scope.

(A) Limited-Energy Installations.

This article covers the general wiring methods and materials requirements for Class 1 power-limited circuits, Class 2 circuits, Class 3 circuits, Class 4 circuits, optical fiber systems, communications systems, antenna systems, community antenna systems, network-powered broadband communications systems, premises-powered broadband communications systems, and power-limited fire alarm systems.

Informational Note: See 800.1 for general requirements of communications installations outside of a building.

(B) Integral Parts of Equipment.

The requirements of this article are not intended to apply to the conductors that form an integral part of equipment, such as listed utilization equipment.

720.2 Listing.

Communications equipment shall be listed as being suitable for electrical connection to a communications network.

Exception: This listing requirement shall not apply to test equipment that is intended for temporary connection to a telecommunications network by qualified persons during the course of installation, maintenance, or repair of telecommunications equipment or systems.

Informational Note No. 1: See ANSI/UL 60950-1-2014, *Standard for Safety of Information Technology Equipment, ANSI/UL 1863-2012, Standard for Safety Communications Circuit Accessories* , or ANSI/UL 62368-1-2014 or ANSI/UL 62368-1-2018, *Audio/Video, Information and Communication Technology Equipment — Part 1: Safety Requirements* .

Informational Note No. 2: See ANSI/ATIS 0600337-2016, *Requirements for Maximum Voltage, Current, and Power Levels Used in Communications Circuits* , for additional information regarding voltages, currents, and power allowed on communications circuits.

720.4 Other Articles.

(A) Other Limited-Energy Articles.

Table 720.4(A) lists the limited-energy installations covered by these general requirements.

Table 720.4(A) Other Articles for Limited-Energy Installations.

Application	Code Section
Limited-energy power sources	721.1
Limited-energy cables for power-limited circuits, fault-managed power circuits, optical fiber circuits, and communications circuits	722.1
Class 1 power-limited circuits and equipment	724.1
Class 2 and Class 3 power-limited circuits and equipment	725.1
Class 4 fault-managed power circuits and equipment	726.1
Overvoltage protection of limited-energy and communications systems	742.1
Limited-energy system grounding	750.1
Fire alarm systems	760.1
Fire-resistive cable systems — Type FR	772.1
General requirements for communications systems outside and entering building	800.1
Antenna systems	810.1
Community antenna and television and radio distribution systems	820.1
Network-powered broadband communications systems	830.1
Premises-powered broadband communications systems	840.1

(B) Hazardous Locations.

Limited-energy and communications cables and equipment shall be permitted to be used in hazardous (classified) locations as defined in 500.5 and 500.6 where specifically permitted elsewhere in this code.

Part II. Installation

720.5 Underground Installations.

(A) Wet Locations.

The interior of enclosures or raceways installed underground shall be considered to be a wet location. Insulated conductors and cables installed in these enclosures or raceways in underground installations shall comply with 722.2(A)(11).

Exception: The requirements of 310.10(C) shall not apply to communications Type CM cables and conductors and coaxial-type CATV cables.

(B) Pools.

Limited-energy and communications cables located under the pool or within the area extending 1.5 m (5 ft) horizontally from the inside wall of the pool shall meet those requirements specified in 680.11 .

(C) Underground Cables and Conductors Under Buildings.

Underground limited-energy and communications cable and conductors installed under a building shall be in a raceway.

(D) Protection from Damage when Emerging from Grade.

Direct-buried limited-energy and communications conductors and cables emerging from grade shall be protected by enclosures or raceways extending from the minimum cover distance below grade required by 720.5(A) to a point at least 2.5 m (8 ft) above finished grade. In no case shall the protection be required to exceed 450 mm (18 in.) below finished grade.

(E) Splices and Taps.

Direct-buried limited-energy and communications conductors or cables shall be permitted to be spliced or tapped without the use of splice boxes. The splices or taps shall be made in accordance with 110.14(B) .

(F) Backfill.

Backfill that contains large rocks, paving materials, cinders, large or sharply angular substances, or corrosive material shall not be placed in an excavation where materials might damage raceways, cables, conductors, or other substructures or prevent adequate compaction of fill or contribute to corrosion of raceways, cables, or other substructures.

Where necessary to prevent physical damage to the raceway, cable, or conductor, protection shall be provided in the form of granular or selected material, suitable running boards, suitable sleeves, or other approved means.

(G) Bushing.

A bushing or terminal fitting with an integral bushed opening shall be used at the end of a conduit or other raceway that terminates underground where the conductors or cables emerge as a direct burial wiring method. A seal incorporating the physical protection characteristics of a bushing shall be permitted to be used in lieu of a bushing.

(H) Earth Movement.

Where direct-buried conductors, raceways, or cables are subject to movement by settlement or frost, direct-buried conductors, raceways, or cables shall be arranged so as to prevent damage to the enclosed conductors or to equipment connected to the raceways.

Informational Note: This section recognizes "S" loops in underground direct burial cables and conductors to raceway transitions, expansion fittings in raceway risers to fixed equipment, and, generally, the provision of flexible connections to equipment subject to settlement or frost heaves.

(I) Directional Boring.

Cables or raceways installed using directional boring equipment shall be approved for the purpose.

(J) Separation From Light or Power, Non-Power-Limited Fire Alarm, or Class 1 Circuits.

Direct-buried limited-energy and communication wires and cables shall be separated at least 300 mm (12 in.) from conductors of any light or power, non-power-limited fire alarm circuit conductors, or Class 1 circuit.

Exception Informational Note No. 1: Separation shall not be required if electric service conductors or all the direct-buried communications wires and cables, CATV-type coaxial cables, and network-powered broadband communications cables are installed in raceways or have metal cable armor.

Exception Informational Note No. 2: Separation shall not be required under one of the following conditions:

(1) If the electric light or power branch-circuit or feeder conductors or Class 1 circuit conductors are installed in a raceway or in metal-sheathed, metal-clad, or Type UF or Type USE cables

(2) If all the direct-buried communications wires cables, CATV-type coaxial cables, and network-powered broadband communications cables have metal cable armor or are installed in raceway

720.6 Protection Against Physical Damage.

(A) General.

Where subject to physical damage, conductors, raceways, and limited energy and communications cables shall be protected.

Informational Note No. 1: See ANSI/TIA-568.0-D-2015, *Generic Telecommunications Cabling for Customer Premises* , and ANSI/TIA 568.3-D-2016, *Optical Fiber Cabling and Components Standard* , for accepted industry practices.

Informational Note No. 2: See ANSI/BICSI N1-2019, *Installation Practices for Telecommunications and IC Cabling and Related Cabling Infrastructure* ; ANSI/TIA-568.1- E-2020, *Commercial Building Telecommunications Infrastructure Standard* ; ANSI/TIA-569-E-2019, *Telecommunications Pathways and Spaces* ; ANSI/TIA-570-C-2012, *Residential Telecommunications Infrastructure Standard* ; ANSI/TIA-1005-A-2012, *Telecommunications Infrastructure Standard for Industrial Premises* ; ANSI/ TIA-1179-A-2017, *Healthcare Facility Telecommunications Infrastructure Standard* ; ANSI/TIA-4966-2014, *Telecommunications Infrastructure Standard for Educational Facilities* ; and other ANSI-approved installation standards for accepted industry practices.

(B) Cables or Conductors Installed in Raceways.

Wires and cables used for limited-energy and communications systems shall be permitted to be installed in any raceway included in Chapter 3.

(1) Number and Size of Cables or Conductors in a Raceway.

The number and size of limited-energy and communications conductors and cables installed in any raceway shall be determined in accordance with all of the following:

(1) Not more cables or conductors as permitted in Chapter 9

(2) To allow for the dissipation of heat

(3) To permit ready installation or withdrawal of the conductors or cables without damage to the conductors or cables, or to their insulation and sheathing

(C) Cables and Raceways Through Wood Members.

(1) Bored Holes.

In both exposed and concealed locations, where a cable- or raceway-type wiring method is installed through bored holes in joists, rafters, or wood members, holes shall be bored so that the edge of the hole is not less than 32 mm (1 $^{1}/_{4}$ in.) from the edges of the wood member. Where this distance cannot be maintained, the cable or raceway shall be protected from penetration by screws or nails by a steel plate(s) or bushing(s) at least 1.6 mm ($^{1}/_{16}$ in.) thick, and of appropriate length and width, installed to cover the area of the wiring.

Exception No. 1: Steel plates shall not be required to protect rigid metal conduit, intermediate metal conduit, rigid PVC conduit, RTRC, or electrical metallic tubing.

Exception No. 2: A listed and marked steel plate less than 1.6 mm ($^{1}/_{16}$ in.) thick that provides equal or better protection against nail or screw penetration shall be permitted.

(2) Notches in Wood.

Where there is no objection because of weakening the building structure, in both exposed and concealed locations, cables or raceways shall be permitted to be laid in notches in wood studs, joists, rafters, or other wood members where the cable or raceway at those points is protected from penetration by nails or screws by a steel plate at least 1.6 mm ($^{1}/_{16}$ in.) thick, and of appropriate length and width, installed to cover the area of the wiring. The steel plate shall be installed before the building finish is applied.

Exception No. 1: Steel plates shall not be required to protect rigid metal conduit, intermediate metal conduit, rigid nonmetallic conduit, or electrical metallic tubing.

Exception No. 2: A listed and marked steel plate less than 1.6 mm ($^{1}/_{16}$ in.) thick that provides equal or better protection against nail or screw penetration shall be permitted.

(D) Limited-Energy Cables without Metallic Cable Armor Through Metal Framing Members.

(1) Limited-Energy Cables without Metallic Armor.

In both exposed and concealed locations where limited-energy cables without metallic armor pass through either factory- or field-punched, cut, or drilled slots or holes in metal members, the cable shall be protected by listed bushings or listed grommets covering all metal edges that are securely fastened in the opening prior to installation of the cable.

(2) Limited-Energy Cables Installed in HDPE or ENT.

Where nails or screws are likely to penetrate limited-energy cables without a metallic cable armor, where installed in HDPE, ENT, or similar flexible nonmetallic raceways, a protection method as specified in 720.6 shall be used to protect the cable and tubing.

Exception: A listed and marked steel plate less than 1.6 mm ($^{1}/_{16}$ in.) thick that provides equal or better protection against nail or screw penetration shall be permitted.

(E) Cables and Raceways Parallel to Framing Members and Furring Strips.

In both exposed and concealed locations, where a cable- or raceway-type wiring method is installed parallel to framing members, such as joists, rafters, or studs, or is installed parallel to furring strips, the cable or raceway shall be installed and supported so that the nearest outside surface of the cable or raceway is not less than 32 mm (1 $^{1}/_{4}$ in.) from the nearest edge of the framing member or furring strips where nails or screws are likely to penetrate. Where this distance cannot be maintained, the cable or raceway shall be protected from penetration by nails or screws by a steel plate, sleeve, or equivalent at least 1.6 mm ($^{1}/_{16}$ in.) thick.

Exception No. 1: Steel plates, sleeves, or the equivalent shall not be required to protect rigid metal conduit, intermediate metal conduit, rigid nonmetallic conduit, or electrical metallic tubing.

Exception No. 2: For concealed work in finished buildings or finished panels for prefabricated buildings where such supporting is impracticable, it shall be permissible to fish the cables between access points.

Exception No. 3: A listed and marked steel plate less than 1.6 mm ($^{1}/_{16}$ in.) thick that provides equal or better protection against nail or screw penetration shall be permitted.

(F) Cables, Raceways, or Boxes Installed in or Under Metal-Corrugated Roof Decking.

A cable, raceway, or box, installed in exposed or concealed locations under metal-corrugated sheet roof decking, shall be installed and supported so there is not less than 38 mm (1 $^{1}/_{2}$ in.) measured from the lowest surface of the roof decking to the top of the cable, raceway, or box. A cable, raceway, or box shall not be installed in concealed locations in metal-corrugated, sheet decking-type roof.

Note: Roof decking material is often repaired or replaced after the initial raceway or cabling and roofing installation and might be penetrated by screws or other mechanical devices designed to provide "hold down" strength of the waterproof membrane or roof insulating material.

Exception No. 1: Rigid metal conduit and intermediate metal conduit, with listed steel or malleable iron fittings and boxes, shall not be required to comply with 720.6(G) .

Exception No. 2: The 38 mm (1 $^{1}/_{2}$ in.) spacing is not required where metal-corrugated sheet roof decking is covered with a minimum thickness 50 mm (2 in.) concrete slab, measured from the top of the corrugated roofing.

(G) Cables and Raceways Installed in Shallow Grooves.

Cable- or raceway-type wiring methods installed in a groove, to be covered by wallboard, siding, paneling, carpeting, or similar finish, shall be protected by 1.6 mm ($^{1}/_{16}$ in.) thick steel plate, sleeve, or equivalent or by not less than 32 mm (1 $^{1}/_{4}$ in.) free space for the full length of the groove in which the cable or raceway is installed.

Exception No. 1: Steel plates, sleeves, or the equivalent shall not be required to protect rigid metal conduit, intermediate metal conduit, rigid PVC conduit, RTRC, or electrical metallic tubing.

Exception No. 2: A listed and marked steel plate less than 1.6 mm ($^{1}/_{16}$ in.) thick that provides equal or better protection against nail or screw penetration shall be permitted.

(H) Fittings.

Where raceways contain limited-energy and communications cables or conductors, and these cables or conductors enter a cabinet, a box, an enclosure, or a raceway, prior to the installation of conductors, the conductors shall be protected in accordance with any of the following:

(1) An identified fitting providing a smoothly rounded insulating surface

(2) A listed metal fitting that has smoothly rounded edges

(3) Separation from the fitting or raceway using an identified insulating material that is securely fastened in place

(4) Threaded hubs or bosses that are an integral part of a cabinet, box, enclosure, or raceway providing a smoothly rounded or flared entry for conductors

Conduit bushings constructed wholly of insulating material shall not be used to secure a fitting or raceway. The insulating fitting or insulating material shall have a temperature rating not less than the insulation temperature rating of the installed conductors.

(I) Structural Joints.

A listed expansion/deflection fitting or other approved means shall be used where a raceway crosses a structural joint intended for expansion, contraction, or deflection, used in buildings, bridges, parking garages, or other structures.

(J) In Hoistways.

In hoistways, limited-energy and communications cables shall be installed in rigid metal conduit, rigid nonmetallic conduit, intermediate metal conduit, liquidtight flexible nonmetallic conduit, or electrical metallic tubing. For elevators or similar equipment, these conductors shall be permitted to be installed as provided in 620.21 .

(K) Safety-Control Equipment.

Where damage to limited-energy and communications cables and conductors can result in a failure of safety-control equipment that would introduce a direct fire or life hazard, all such conductors and cables shall be protected from physical damage.

Exception: Room thermostats, water temperature regulating devices, and similar controls used in conjunction with electrically controlled household heating and air conditioning shall not be considered safety-control equipment.

720.7 Protection Against Corrosion and Deterioration.

Raceways, cable trays, cablebus, auxiliary gutters, cable armor, boxes, cable sheathing, cabinets, enclosures (other than surrounding fences and walls), elbows, couplings, fittings, supports, and support hardware, installed for use with limited-energy and communications systems, shall be of materials suitable for the environment in which they are to be installed.

(A) Ferrous Metal Equipment.

Ferrous metal raceways, cable trays, cablebus, auxiliary gutters, cable armor, boxes, cable sheathing, cabinets, enclosures (other than surrounding fences and walls), elbows, couplings, nipples, fittings, supports, and support hardware shall be suitably protected against corrosion inside and outside (except threads at joints) by a coating of approved corrosion-resistant material. Where corrosion protection is necessary and the conduit is threaded anywhere other than at the factory where the product is listed, the threads shall be coated with an approved electrically conductive, corrosion-resistant compound.

Exception: Stainless steel shall not be required to have protective coatings.

(1) Protected from Corrosion Solely by Enamel.

Where protected from corrosion solely by enamel, ferrous metal raceways, cable trays, cablebus, auxiliary gutters, cable armor, boxes, cable sheathing, cabinets, enclosures (other than surrounding fences and walls), elbows, couplings, nipples, fittings, supports, and support hardware shall not be used outdoors or in wet locations as described in 300.6(D) .

(2) Organic Coatings on Boxes or Cabinets.

Where boxes, cabinets, or enclosures (other than surrounding fences and walls) have an approved system of organic coatings and are marked "Raintight," "Rainproof," or "Outdoor Type," they shall be permitted outdoors.

(3) In Concrete or in Direct Contact with the Earth.

Ferrous metal raceways, cable armor, boxes, cable sheathing, cabinets, enclosures (other than surrounding fences and walls), elbows, couplings, nipples, fittings, supports, and support hardware shall be permitted to be installed in concrete, in direct contact with the earth, or in areas subject to severe corrosive influences where made of material approved for the condition or where provided with corrosion protection approved for the condition.

(B) Aluminum Metal Equipment.

Aluminum raceways, cable trays, cablebus, auxiliary gutters, cable armor, boxes, cable sheathing, cabinets, enclosures (other than surrounding fences and walls), elbows, couplings, nipples, fittings, supports, and support hardware embedded or encased in concrete or in direct contact with the earth shall be provided with supplementary corrosion protection.

(C) Nonmetallic Equipment.

Nonmetallic raceways, cable trays, cablebus, auxiliary gutters, boxes, cables with a nonmetallic outer jacket and internal metal armor or jacket, cable sheathing, cabinets, enclosures (other than surrounding fences and walls), elbows, couplings, nipples, fittings, supports, and support hardware shall be made of material approved for the condition and shall comply with 720.7(C)(1) and 720.7(C)(2) as applicable to the specific installation.

(1) Exposed to Sunlight.

Where exposed to sunlight, the materials shall be listed as sunlight resistant or shall be identified as sunlight resistant.

(2) Chemical Exposure.

Where subject to exposure to chemical solvents, vapors, splashing, or immersion, materials or coatings shall either be inherently resistant to chemicals based on their listing or be identified for the specific chemical reagent.

(D) Indoor Wet Locations.

In portions of dairy processing facilities, laundries, canneries, and other indoor wet locations, and in locations where walls are frequently washed or where there are surfaces of absorbent materials, such as damp paper or wood, the entire wiring system, where installed exposed, including all boxes, cabinets, enclosures (other than surrounding fences and walls), fittings, raceways, and cable used therewith, shall be mounted so that there is at least a 6 mm ($^{1}/_{4}$ in.) airspace between it and the wall or supporting surface.

Exception: Nonmetallic raceways, boxes, and fittings shall be permitted to be installed without the airspace on a concrete, masonry, tile, or similar surface.

Informational Note: In general, areas where acids and alkali chemicals are handled and stored might present such corrosive conditions, particularly when wet or damp. Severe corrosive conditions might also be present in portions of meatpacking plants, tanneries, glue houses, and some stables; in installations immediately adjacent to a seashore and swimming pool areas; in areas where chemical deicers are used; and in storage cellars or rooms for hides, casings, fertilizer, salt, and bulk chemicals.

720.8 Raceways Exposed to Different Temperatures.

(A) Sealing.

Where portions of a raceway or sleeve are known to be subjected to different temperatures, and where condensation is known to be a problem, as in cold storage areas of buildings or where passing from the interior to the exterior of a building, the raceway or sleeve shall be sealed to prevent the circulation of warm air to a colder section of the raceway or sleeve. Sealants shall be identified for use with cable insulation, conductor insulation, a bare conductor, a shield, or other components. An explosionproof seal shall not be required for this purpose.

(B) Expansion, Expansion-Deflection, and Deflection Fittings.

Raceways shall be provided with expansion, expansion-deflection, or deflection fittings where necessary to compensate for thermal expansion, deflection, and contraction.

Informational Note No. 1: Table 352.44(A) and Table 355.44 provide the expansion information for polyvinyl chloride (PVC) and for reinforced thermosetting resin conduit (RTRC), respectively. A nominal number for steel conduit can be determined by multiplying the expansion length in Table 352.44(A) by 0.20. The coefficient of expansion for steel electrical metallic tubing, intermediate metal conduit, and rigid metal conduit is 1.170×10^{-5} (0.0000117 mm per mm of conduit for each °C in temperature change) [0.650×10^{-5} (0.0000065 in. per in. of conduit for each °F in temperature change)]. A nominal number for aluminum conduit and aluminum electrical metallic tubing can be determined by multiplying the expansion length in Table 352.44(A) by 0.40. The coefficient of expansion for aluminum electrical metallic tubing and aluminum rigid metal conduit is 2.34×10^{-5} (0.0000234 mm per mm of conduit for each °C in temperature change) [1.30×10^{-5} (0.000013 in. per in. of conduit for each °F in temperature change)].

Informational Note No. 2: See NEMA FB 2.40-2019, *Installation Guidelines for Expansion and Expansion/Deflection Fittings* , for further information on expansion and expansion deflection fittings.

720.10 Installation of Limited-Energy and Communications Cables and Conductors with Non-Electrical Systems.

Raceways or cable trays containing limited-energy or communications cables and conductors shall not contain any pipe, tube, or other means for steam, water, air, gas, drainage, or any service other than electrical installations as permitted elsewhere in this code.

720.11 Limited-Energy and Communications System Raceways in Wet Locations Above Grade.

Where raceways used for limited-energy and communications systems are installed in wet locations above grade, the interior of these raceways shall be considered to be a wet location. Insulated cables and conductors installed in raceways in wet locations above grade shall comply with 310.10(C) .

720.14 Mechanical Continuity — Raceways and Cables.

(A) General.

Raceways, cable armors, and cable sheaths shall be continuous between cabinets, boxes, conduit bodies, fittings, or other enclosures or outlets.

Exception No. 1: Short sections of raceways used to provide support or protection of cable assemblies from physical damage shall not be required to be mechanically continuous.

Exception No. 2: Raceways and cables installed into the bottom of open bottom equipment shall not be required to be mechanically secured to the equipment.

(B) Limited-Energy and Communications Cables and Conductors Installed in a Raceway.

Limited-energy and communications cables and conductors installed in a raceway shall be continuous between outlets, boxes, devices, and so forth, unless specifically permitted elsewhere in this code.

720.19 Supporting Cables and Conductors in Vertical Raceways.

(A) Spacing Intervals — Maximum.

Limited-energy and communications cables and conductors in vertical raceways shall be supported in accordance with the following:

(1) At least one support method shall be provided for each conductor at the top of the vertical raceway or as close to the top as practical.

(2) Intermediate supports shall be provided as necessary to limit supported conductor lengths to not greater than 30 m (100 ft).

Exception: Steel wire armor cable shall be supported at the top of the riser with a cable support that clamps the steel wire armor. A safety device shall be permitted at the lower end of the riser to hold the cable in the event there is slippage of the cable in the wire-armored cable support. Additional wedge-type supports shall be permitted to relieve the strain on the equipment terminals caused by expansion of the cable under load.

(B) Fire-Resistive Cables and Conductors.

Support methods and spacing intervals for fire-resistive limited-energy and communications cables and conductors shall comply with any restrictions provided in the listing of the electrical circuit protective system or fire-resistive cable system used, and in no case shall the support intervals be lengths greater than 30 m (100 ft).

(C) Support Methods.

One of the following methods of support shall be used:

(1) Clamping devices constructed of or employing insulating wedges inserted in the ends of the raceways. Where clamping of insulation does not adequately support the cable, the conductor also shall be clamped.

(2) Inserting boxes at the required intervals in which insulating supports are installed and secured in an approved manner to withstand the weight of the conductors attached thereto, and the boxes are provided with covers.

(3) In junction boxes, deflecting the cables not less than 90 degrees and carrying them horizontally to a distance not less than twice the diameter of the cable, with the cables being carried on two or more insulating supports and additionally secured thereto by tie wires, if desired. Where this method is used, cables shall be supported at intervals not greater than 6 m (20 ft).

(4) Other approved means.

720.21 Spread of Fire or Products of Combustion.

Limited-energy and communications installations in hollow spaces, vertical shafts, and ventilation or air-handling ducts shall be made so that the possible spread of fire or products of combustion will not be substantially increased. Openings around electrical penetrations into or through fire-resistant-rated walls, partitions, floors, or ceilings shall be firestopped using approved methods to maintain the fire resistance rating.

Informational Note: Directories of electrical construction materials published by qualified testing laboratories contain many listing installation restrictions necessary to maintain the fire-resistive rating of assemblies where penetrations or openings are made. Building codes also contain restrictions on membrane penetrations on opposite sides of a fire-resistance-rated wall assembly. An example is the 600 mm (24 in.) minimum horizontal separation that usually applies between boxes installed on opposite sides of the wall. Assistance in complying with the requirements of 720.21 can be found in building codes, fire resistance directories, and product listings.

720.22 Wiring in Ducts Not Used for Air Handling, Fabricated Ducts for Environmental Air, and Other Spaces for Environmental Air (Plenums).

The requirements of this section shall apply to the installation of limited-energy, communications, coaxial-type CATV, conductive optical fiber-type OF conductors, cables, and equipment in ducts used for dust, loose stock, or vapor removal, ducts specifically fabricated for environmental air, and other spaces used for environmental air (plenums).

Informational Note: See Article 424, Part VI for requirements on duct heaters.

(A) Ducts for Dust, Loose Stock, or Vapor Removal.

No limited-energy or communications wiring systems of any type shall be installed in ducts used to transport dust, loose stock, or flammable vapors. No wiring system of any type shall be installed in any duct, or shaft containing only such ducts, used for vapor removal or for ventilation of commercial-type cooking equipment.

Exception: Nonconductive fiber optical cables shall be permitted in ducts used for dust, loose stock, or vapor removal.

(B) Ducts Specifically Fabricated for Environmental Air.

Limited-energy and communications equipment, devices, and the wiring methods specified in this section shall be permitted within such ducts only if necessary for the direct action upon, or sensing of, the contained air. Where equipment or devices are installed and illumination is necessary to facilitate maintenance and repair, enclosed gasketed-type luminaires shall be permitted.

Only wiring methods consisting of Type MI cable without an overall nonmetallic covering, Type MC cable employing a smooth or corrugated impervious metal sheath without an overall nonmetallic covering, electrical metallic tubing, flexible metallic tubing, intermediate metal conduit, or rigid metal conduit without an overall nonmetallic covering shall be installed in ducts specifically fabricated to transport environmental air. Flexible metal conduit shall be permitted, in lengths not to exceed 1.2 m (4 ft), to connect physically adjustable equipment and devices permitted to be in these fabricated ducts. The connectors used with flexible metal conduit shall effectively close any openings in the connection.

Exception: Wiring methods and cabling systems, listed for use in other spaces used for environmental air (plenums), shall be permitted to be installed in ducts specifically fabricated for environmental air-handling purposes under both of the following conditions:

(1) The wiring methods or cabling systems shall be permitted only if necessary to connect to equipment or devices associated with the direct action upon or sensing of the contained air.

(2) The total length of such wiring methods or cabling systems shall not exceed 1.2 m (4 ft).

(C) Other Spaces Used for Environmental Air (Plenums).

This section shall apply to spaces not specifically fabricated for environmental air-handling purposes but used for air-handling purposes as a plenum. This section shall not apply to habitable rooms or areas of buildings, the prime purpose of which is not air handling.

Informational Note No. 1: The space over a hung ceiling used for environmental air-handling purposes is an example of the type of other space to which this section applies.

Informational Note No. 2: See NFPA 90A-2024, *Standard for the Installation of Air-Conditioning and Ventilating Systems* , and other mechanical codes for information on how the term *other spaces used for environmental air (plenum)* , as used in this section, correlates with the use of the term plenum where the plenum is used for return air purposes, as well as some other air-handling spaces.

Informational Note No. 3: Paint, plaster, cleaners, abrasives, corrosive residues, or other contaminants may result in an undetermined alteration of wire and cable properties.

Exception: This section shall not apply to the joist or stud spaces of dwelling units where the wiring passes through such spaces perpendicular to the long dimension of such spaces.

(1) Wiring Methods.

The limited-energy and communications cables used in other spaces used for environmental air shall be limited to those cables specifically listed for use within an air-handling space or listed prefabricated cable assemblies of metallic manufactured wiring systems without nonmetallic sheath. Other types of cables, conductors, and raceways shall be permitted to be installed in electrical metallic tubing, flexible metallic tubing, intermediate metal conduit, rigid metal conduit without an overall nonmetallic covering, flexible metal conduit, or, where accessible, surface metal raceway or metal wireway with metal covers.

Informational Note: See UL 2043, *Fire Test for Heat and Visible Smoke Release for Discrete Products and Their Accessories Installed in Air-Handling Spaces* , for one method of testing low smoke and heat release properties for nonmetallic cable ties and other nonmetallic cable accessories to determine a maximum peak optical density of 0.50 or less, an average optical density of 0.15 or less, and a peak heat release rate of 100 kW or less.

(2) Cable Tray Systems.

The requirements in 720.22(C)(2)(a) or 720.22(C)(2)(b) shall apply to the use of metallic cable tray systems in other spaces used for environmental air (plenums), where accessible.

(a) *Metal Cable Tray Systems.* Metal cable tray systems shall be permitted to support the wiring methods specified in 720.22(C)(1) :

(b) *Solid Side and Bottom Metal Cable Tray Systems.* Solid side and bottom metal cable tray systems with solid metal covers shall be permitted to enclose wiring methods and cables not already covered in 720.22(C)(1) in accordance with 392.10(A) and 392.10(B) :

(3) Equipment.

Electrical equipment with a metal enclosure, or electrical equipment with a nonmetallic enclosure listed for use within an air-handling space and having low smoke and heat release properties, and associated wiring material suitable for the ambient temperature shall be permitted to be installed in such other spaces unless prohibited elsewhere in this code.

Informational Note No. 1: See UL 2043, *Fire Test for Heat and Visible Smoke Release for Discrete Products and Their Accessories Installed in Air-Handling Spaces* , for one method of testing low smoke and heat release properties to determine that the equipment exhibits a maximum peak optical density of 0.50 or less, an average optical density of 0.15 or less, and a peak heat release rate of 100 kW or less.

Informational Note No. 2: See NFPA 90A-2024, *Standard for the Installation of Air Conditioning and Ventilating Systems* , for information on listing discrete products as having low smoke and hear release properties.

Exception: Integral fan systems shall be permitted where specifically identified for use within an air-handling space.

720.23 Panels Designed to Allow Access.

Cables, raceways, and equipment installed behind panels designed to allow access, including suspended ceiling panels, shall be arranged and secured in accordance with the following:

(1) Removal of the panels and access to the equipment allowed

(2) Access to electrical equipment not denied by an accumulation of cables

720.24 Bends.

Where a single run is made up of one or more raceway type wiring methods, maximum degrees of bends shall not exceed 360.

720.25 Abandoned Cables.

The accessible portion of abandoned cables shall be removed. Where cables are identified for future use with a tag, the tag shall be of sufficient durability to withstand the environment involved.

720.27 Temperature Limitations of Limited-Energy Conductors and Cables.

Limited-energy and communications cables and conductors shall be installed in accordance with 722.27 for temperature limitations.

720.30 Securing and Supporting.

(A) Secured in Place.

(1) Raceways, Cable Assemblies, Boxes, Cabinets, and Fittings.

Raceways, cable assemblies, boxes, cabinets, and fittings shall be securely fastened in place.

(2) Limited-Energy and Communications Cables.

Limited-energy and communications cables installed on the surface of ceilings and sidewalls shall be supported by the building structure in such a manner that the cables will not be damaged by normal building use.

(B) Wiring Systems Installed Above Suspended Ceilings.

Support wires that do not provide secure support shall not be the sole support. Support wires and associated fittings that provide secure support and that are installed in addition to the ceiling grid support wires shall be permitted as the sole support. Where independent support wires are used, they shall be secured at both ends. Cables and raceways shall not be supported by ceiling grids.

(C) Fire-Rated Assemblies.

Wiring located within the cavity of a fire-rated floor-ceiling or roof-ceiling assembly shall not be secured to, or supported by, the ceiling assembly, including the ceiling support wires. An independent means of secure support shall be provided and shall be permitted to be attached to the assembly. Where independent support wires are used, they shall be distinguishable by color, tagging, or other effective means from those that are part of the fire-rated design.

Exception: The ceiling support system shall be permitted to support wiring and equipment that have been tested as part of the fire-rated assembly.

Informational Note: See ASTM E119, *Standard Test Methods for Fire Tests of Building Construction and Materials* , for one method of testing to determine fire rating.

(D) Non-Fire-Rated Assemblies.

Wiring located within the cavity of a non-fire-rated floor-ceiling or roof-ceiling assembly shall not be secured to, or supported by, the ceiling assembly, including the ceiling support wires. An independent means of secure support shall be provided and shall be permitted to be attached to the assembly. If independent support wires are used, they shall be distinguishable by color, tagging, or other effective means.

Exception: The ceiling support system shall be permitted to support branch-circuit wiring and associated equipment if installed in accordance with the ceiling system manufacturer's instructions.

(E) Raceways Used as Means of Support.

Raceways shall be used only as a means of support for other raceways, cables, or nonelectrical equipment under any of the following conditions:

(1) If the raceway or means of support is identified as a means of support

(2) If the raceway contains power supply conductors for electrically controlled equipment and is used to support Class 2 or Class 3 circuit conductors or cables that are solely for the purpose of connection to the equipment control circuits

(3) Overhead (aerial) spans of optical fiber-type OF cables, communications drop wires, communications cables, and coaxial-CATV cables attached to the exterior of a raceway-type mast intended for the attachment and support of such cables, and where not prohibited elsewhere in this code.

(F) Cables Not Used as Means of Support.

Cable wiring methods shall not be used as a means of support for other cables, raceways, or nonelectrical equipment.

~~**(C)** Spaces Used for Environmental Air (Plenums).~~

~~If nonmetallic cable supports and other nonmetallic cable accessories are used to secure and support cables installed in other locations used for environmental air (plenums), they shall be listed as having low-smoke and heat-release properties in accordance with 720.22(C)(3) .~~

~~Informational Note No. 1: See ANSI/BICSI N1-2019, *Installation Practices for Telecommunications and IC Cabling and Related Cabling Infrastructure* ; ANSI/TIA-568.1- E-2020, *Commercial Building Telecommunications Infrastructure Standard* ; ANSI/TIA-569-E-2019, *Telecommunications Pathways and Spaces* ; ANSI/TIA-570-C-2012, Residential Telecommunications Infrastructure Standard; ANSI/TIA-1005-A-2012, *Telecommunications Infrastructure Standard for Industrial Premises* ; ANSI/ TIA-1179-A-2017, *Healthcare Facility Telecommunications Infrastructure Standard* ; ANSI/TIA-4966-2014, *Telecommunications Infrastructure Standard for Educational Facilities* ; ANSI/NECA/FOA 301-2016, *Standard for Installing and Testing Fiber Optic Cables* , ANSI/TIA-568.0-d-2015, *General Telecommunications Cabling for Customer Premises* , and ANSI/TIA-568.3-d-2016, *Optical Fiber Cabling and Components Standard* , and other ANSI-approved installation standards for accepted industry practices.~~

~~Informational Note No. 2: See NFPA 90A-2024, *Standard for the Installation of Air-Conditioning and Ventilating Systems* , 8.5.5.6 for listing information of discrete combustible components installed in accordance with 300.25(C).~~

~~Informational Note No. 3: Paint, plaster, cleaners, abrasives, corrosive residues, or other contaminants may result in an undetermined alteration of wire and cable properties.~~

~~**720.32** Boxes, Conduit Bodies, or Fittings Where Required.~~

~~A box or conduit body shall not be required where cables enter or exit from conduit or tubing that is used to provide cable support or protection against physical damage. A fitting shall be provided on the end(s) of the conduit or tubing to protect the cable from abrasion.~~

REPLACE THE TEXT OF ARTICLE 720 WITH THE TEXT IN THE ATTACHMENT

Additional Proposed Changes

File Name	Description	Approved
revised_Article_720_8-26-2024.docx	Revised text for Article 720 in MS Word revisions mode	
revised_Article_720_8-26-2024.pdf	Revised text for Article 720 in PDF format	

Statement of Problem and Substantiation for Public Comment

While the term “limited-energy cable” is new, the concept is not. Look in Chapters 7 & 8 of the 2023 NEC at the separation rules for power-limited cables, communications cables, optical fiber cables and fault-managed power cables. A group of low hazard cables are permitted to be run in the same pathway (raceway, cable tray, etc.). These same low hazard cables are required to be separated from higher hazard circuits, including Class 1 circuits, non-power-limited fire alarm circuits, network-powered broadband communications medium-power circuits, and electric power and light circuits.

The low hazard cables are limited-energy cables in the First Revision, with Article 720 covering general requirements for wiring and material for limited-energy systems. However, the inclusion of “optical fiber systems” in [720.1(A)] was changed to “optical fiber cables” in the recommended text because 90.2(C) covers only “optical fiber cables” . Cables alone to not constitute a “system”. The other recommended text changes to 720.1(A) are the deletion of Class 1 circuits because they are not limited-energy circuits. Network-powered broadband communications systems were edited to include only “low-power” circuits, which are limited-energy circuits, unlike “medium-power” circuits which are not limited energy circuits. “Community antenna systems” was changed to “community antenna television and radio distribution systems” to correlate with the title of Article 820 and comply with the 3.5.5 Parallel Construction in the NEC Style Manual.

Class 1 circuits were also deleted from the recommended text for Table 720.4(A).

“Limited-energy and communication cables” was shortened to “limited-energy cables” in multiple places in the recommended text because communications cables are a type of limited-energy cable.

Because the communications articles in Chapter 8 and the optical fiber cable article (770) coordinate with the National Electrical Safety Code for outside plant installations, merging these articles with the Chapter 7 Articles 722, 725 and 760 is difficult because these Articles cover outdoor installations and have provisions for outdoor cables (PLTC & CL4Z).

Since the stated purpose of the First Draft text is to move requirements, not to change them, the recommended text for Article 720 includes exemptions for unlisted outside plant cables from requirements for installation in raceway, protection and construction of splices. It also exempts communications cables, CATV-type cables and optical fiber cables, from raceway fill and wet location requirements.

The recommended text edits the separation rules [720.5(J)] to include network-powered broadband communications medium-power cables and non-power-limited fire alarm cables in the group of cables which the limited-energy cables need to be separated from. The recommended text has an exemption for nonconductive optical fiber cables from the separation rules.

The section of plenum cable ties (800.170) was deleted in the First Draft because it was being moved, but it appears to have been dropped. The recommended text for Article 720 moves it to 720.22(C)(4).

Related Public Comments for This Document

Related Comment	Relationship
Public Comment No. 332-NFPA 70-2024 [Section No. 720.1(A)]	
Public Comment No. 333-NFPA 70-2024 [Section No. 720.2]	
Public Comment No. 334-NFPA 70-2024 [Section No. 720.4(A)]	
Public Comment No. 335-NFPA 70-2024 [Section No. 720.5(A)]	
Public Comment No. 336-NFPA 70-2024 [Section No. 720.5(B)]	
Public Comment No. 337-NFPA 70-2024 [Section No. 720.5(C)]	
Public Comment No. 338-NFPA 70-2024 [Section No. 720.5(D)]	
Public Comment No. 339-NFPA 70-2024 [Section No. 720.5(E)]	
Public Comment No. 340-NFPA 70-2024 [Section No. 720.5(J)]	
Public Comment No. 341-NFPA 70-2024 [Section No. 720.6(A)]	
Public Comment No. 342-NFPA 70-2024 [Section No. 720.6(B) [Excluding any Sub-Sections]]	
Public Comment No. 343-NFPA 70-2024 [Section No. 720.6(B)(1)]	
Public Comment No. 344-NFPA 70-2024 [Section No. 720.6(H)]	
Public Comment No. 345-NFPA 70-2024 [Section No. 720.6(J)]	
Public Comment No. 346-NFPA 70-2024 [Section No. 720.6(K)]	
Public Comment No. 347-NFPA 70-2024 [Section No. 720.7 [Excluding any Sub-Sections]]	
Public Comment No. 348-NFPA 70-2024 [Section No. 720.10]	
Public Comment No. 349-NFPA 70-2024 [Section No. 720.11]	

Public Comment No. 350-NFPA 70-2024 [Section No. 720.14(B)]
Public Comment No. 351-NFPA 70-2024 [Section No. 720.19(A)]
Public Comment No. 352-NFPA 70-2024 [Section No. 720.19(B)]
Public Comment No. 353-NFPA 70-2024 [Section No. 720.21]
Public Comment No. 354-NFPA 70-2024 [Section No. 720.22 [Excluding any Sub-Sections]]
Public Comment No. 355-NFPA 70-2024 [Section No. 720.22(A)]
Public Comment No. 356-NFPA 70-2024 [Section No. 720.22(B)]
Public Comment No. 357-NFPA 70-2024 [Section No. 720.22(C)(1)]
Public Comment No. 358-NFPA 70-2024 [Section No. 720.27]
Public Comment No. 359-NFPA 70-2024 [Section No. 720.30(A)(2)]
Public Comment No. 361-NFPA 70-2024 [Section No. 720.30(E)]
Public Comment No. 1479-NFPA 70-2024 [Section No. 720.22(C)]
Public Comment No. 1343-NFPA 70-2024 [Section No. 720.4(B)]

Related Item

- FCR-238

Submitter Information Verification

Submitter Full Name: David Kiddoo
Organization: CCCA
Affiliation: Communications Cable & Connectivity Association
Street Address:
City:
State:
Zip:

Submittal Date: Sun Aug 25 06:16:12 EDT 2024
Committee: NEC-P03

Article 720 General Requirements for Limited-Energy System Wiring Methods and Materials

Part I. General

720.1 Scope.

(A) Limited-Energy Installations. This article covers the general wiring methods and materials requirements for ~~Class 1 power-limited circuits~~ optical fiber cables, Class 2 circuits, Class 3 circuits, Class 4 circuits, ~~optical fiber systems,~~ communications systems, antenna systems, community antenna television and radio distribution systems, network-powered broadband communications low-power systems, premises-powered broadband communications systems, and power-limited fire alarm systems.

Informational Note: See 800.1 for general requirements of communications installations outside of a building.

(B) Integral Parts of Equipment. The requirements of this article are not intended to apply to the conductors that form an integral part of equipment, such as listed utilization equipment.

720.2 Listing. Communications equipment shall be listed as being suitable for electrical connection to a communications network.

Exception: This listing requirement shall not apply to test equipment that is intended for temporary connection to a telecommunications network by qualified persons during the course of installation, maintenance, or repair of telecommunications equipment or systems.

Informational Note No. 1: See ~~ANSI~~/UL 60950-1-200~~7~~14, *Standard for Safety of Information Technology Equipment, ~~ANSI~~/UL 1863-200~~4~~12, ~~Standard for Safety~~ Communications Circuit Accessories*, or ~~ANSI~~/UL 62368-1-2014 or ~~ANSI~~/UL 62368-1-2019~~8~~, *Audio/Video, Information and Communication Technology Equipment — Part 1: Safety Requirements*.

Informational Note No. 2: See ANSI/ATIS 0600337-2016, *Requirements for Maximum Voltage, Current, and Power Levels Used in Communications Circuits*, for additional information regarding voltages, currents, and power allowed on communications circuits.

720.4 Other Articles.

(A) Other Limited-Energy Articles. Table 720.4(A) lists the limited-energy installations covered by these general requirements.

Table 720.4(A) Other Articles for Limited-Energy Installations.

Application	Code Section
Limited-energy power sources	721.1
Limited-energy cables for power-limited circuits, fault-managed power circuits, optical fiber circuits, and communications circuits	722.1
~~Class 1 power-limited circuits and equipment~~	~~724.1~~
Class 2 and Class 3 power-limited circuits and equipment	725.1
Class 4 fault-managed power circuits and equipment	726.1
Overvoltage protection of limited-energy and communications systems	742.1
Limited-energy system grounding	750.1
Fire alarm systems	760.1
Fire-resistive cable systems — Type FR	772.1
General requirements for communications systems outside and entering building	800.1
Antenna systems	810.1
Community antenna and television and radio distribution systems	820.1
Network-powered broadband communications systems	830.1
Premises-powered broadband communications systems	840.1

(B) Hazardous Locations. Limited-energy ~~and communications~~ cables and equipment shall be permitted to be used in hazardous (classified) locations as defined in 500.5 and 500.6 where specifically permitted elsewhere in this code.

Part II. Installation

720.5 Underground Installations.

(A) Wet Locations. The interior of enclosures or raceways installed underground shall be considered to be a wet location. Insulated conductors and cables installed in these enclosures or raceways in underground installations shall comply with 722.2(A)(12~~1~~).

Exception: The requirements of 722.2(A)(12)~~310.10(C)~~ shall not apply to optical fiber cables, communications ~~Type CM~~ cables ~~and conductors~~ and coaxial-type CATV cables.

(B) Pools. Listed limited-energy ~~and communications~~ cables located under the pool or within the area extending 1.5 m (5 ft) horizontally from the inside wall of the pool shall meet those requirements specified in 680.11.

(C) Underground Cables and Conductors Under Buildings. Underground limited-energy ~~and communications cable and conductors~~ cables installed under a building shall be in a raceway.

Exception: Unlisted outside plant communications cables, CATV-type coaxial cables and optical fiber cables shall be permitted to be installed without raceway.

(D) Protection from Damage when Emerging from Grade. Direct-buried limited-energy ~~and communications conductors and~~ cables emerging from grade shall be protected by enclosures or raceways extending from the minimum cover distance below grade required by 720.5(A) to a point at least 2.5 m (8 ft) above finished grade. In no case shall the protection be required to exceed 450 mm (18 in.) below finished grade.

Exception: Unlisted outside plant communications cables, CATV-type coaxial cables and optical fiber cables shall be permitted to be installed without protection.

(E) Splices and Taps. Direct-buried limited-energy ~~and communications conductors or~~ cables shall be permitted to be spliced or tapped without the use of splice boxes. The splices or taps shall be made in accordance with 110.14(B).

Exception: Splices or taps of unlisted outside plant communications cables, CATV-type coaxial cables and optical fiber cables shall not be required to be in accordance with 110.14(B).

(F) Backfill. Backfill that contains large rocks, paving materials, cinders, large or sharply angular substances, or corrosive material shall not be placed in an excavation where materials might damage raceways, cables, conductors, or other substructures or prevent adequate compaction of fill or contribute to corrosion of raceways, cables, or other substructures.
Where necessary to prevent physical damage to the raceway, cable, or conductor, protection shall be provided in the form of granular or selected material, suitable running boards, suitable sleeves, or other approved means.

(G) Bushing. A bushing or terminal fitting with an integral bushed opening shall be used at the end of a conduit or other raceway that terminates underground where the conductors or cables emerge as a direct burial wiring method. A seal incorporating the physical protection characteristics of a bushing shall be permitted to be used in lieu of a bushing.

(H) Earth Movement. Where direct-buried conductors, raceways, or cables are subject to movement by settlement or frost, direct-buried conductors, raceways, or cables shall be arranged so as to prevent damage to the enclosed conductors or to equipment connected to the raceways.

Informational Note: This section recognizes "S" loops in underground direct burial cables and conductors to raceway transitions, expansion fittings in raceway risers to fixed equipment, and, generally, the provision of flexible connections to equipment subject to settlement or frost heaves.

(I) Directional Boring. Cables or raceways installed using directional boring equipment shall be approved for the purpose.

(J) Separation of Limited-Energy Cables From Light or Power, Non-Power-Limited Fire Alarm, Network-Powered Broadband Communications Medium-Power Circuits, or Class 1 Circuits. ~~D~~Listed direct-buried limited-energy ~~and communication wires and~~ cables shall be separated at least 300 mm (12 in.) from conductors of any light or power, non-power-limited fire alarm circuit conductors, or Class 1 circuit.

Exception ~~Informational Note~~ No. 1: Separation shall not be required if electric service conductors or all the direct-buried communications wires and cables, CATV-type coaxial cables, and network-powered broadband communications cables are installed in raceways or have metal cable armor.

Exception ~~Informational Note~~ No. 2: Separation shall not be required under one of the following conditions:

(1) If the electric light or power branch-circuit or feeder conductors, non-power-limited fire alarm, network-powered broadband communications medium-power, or Class 1 circuit conductors are installed in a raceway or in metal-sheathed, metal-clad, or Type UF or Type USE cables

(2) If all the direct-buried ~~communications wires cables, CATV-type coaxial cables, and network-powered broadband communications~~ limited-energy cables have metal cable armor or are installed in raceway

Exception No. 3: Nonconductive optical fiber cables shall not be required to be separated.

720.6 Protection Against Physical Damage.

(A) General. Where subject to physical damage, conductors, raceways, and limited~~-~~-energy ~~and communications~~ cables shall be protected.

Informational Note No. 1: See ANSI/TIA-568.0-D-2015, *Generic Telecommunications Cabling for Customer Premises*, and ANSI/TIA 568.3-D-2016, *Optical Fiber Cabling and Components Standard*, for accepted industry practices.

Informational Note No. 2: See ANSI/BICSI N1-2019, *Installation Practices for Telecommunications and IC Cabling and Related Cabling Infrastructure*; ANSI/TIA-568.1- E-2020, *Commercial Building Telecommunications Infrastructure Standard*; ANSI/TIA-569-E-2019, *Telecommunications Pathways and Spaces*; ANSI/TIA-570-C-2012, *Residential Telecommunications Infrastructure Standard*; ANSI/TIA-1005-A-2012, *Telecommunications Infrastructure Standard for Industrial Premises*; ANSI/ TIA-1179-A-2017, *Healthcare Facility Telecommunications Infrastructure Standard*; ANSI/TIA-4966-2014, *Telecommunications Infrastructure Standard for Educational Facilities*; and other ANSI-approved installation standards for accepted industry practices.

(B) Cables or Conductors Installed in Raceways. Wires and cables used for limited-energy ~~and communications~~ systems shall be permitted to be installed in any raceway included in Chapter 3.

(1) Number and Size of Cables or Conductors in a Raceway. The number and size of limited-energy and communications conductors and cables installed in any raceway shall be determined in accordance with all of the following:

(1) Not more cables or conductors as permitted in Chapter 9

(2) To allow for the dissipation of heat

(3) To permit ready installation or withdrawal of the conductors or cables without damage to the conductors or cables, or to their insulation and sheathing

Exception: Raceway fill requirements shall not apply to communications cables, CATV-type coaxial cables and optical fiber cables.

(C) Cables and Raceways Through Wood Members.

(1) Bored Holes. In both exposed and concealed locations, where a cable- or raceway-type wiring method is installed through bored holes in joists, rafters, or wood members, holes shall be bored so that the edge of the hole is not less than 32 mm (1¼ in.) from the edges of the wood member. Where this distance cannot be maintained, the cable or raceway shall be protected from penetration by screws or nails by a steel plate(s) or bushing(s) at least 1.6 mm (1/16 in.) thick, and of appropriate length and width, installed to cover the area of the wiring.

Exception No. 1: Steel plates shall not be required to protect rigid metal conduit, intermediate metal conduit, rigid PVC conduit, RTRC, or electrical metallic tubing.

Exception No. 2: A listed and marked steel plate less than 1.6 mm (1/16 in.) thick that provides equal or better protection against nail or screw penetration shall be permitted.

(2) Notches in Wood. Where there is no objection because of weakening the building structure, in both exposed and concealed locations, cables or raceways shall be permitted to be laid in notches in wood studs, joists, rafters, or other wood members where the cable or raceway at those points is protected from penetration by nails or screws by a steel plate at least 1.6 mm (1/16 in.) thick, and of appropriate length and width, installed to cover the area of the wiring. The steel plate shall be installed before the building finish is applied.

Exception No. 1: Steel plates shall not be required to protect rigid metal conduit, intermediate metal conduit, rigid nonmetallic conduit, or electrical metallic tubing.

Exception No. 2: A listed and marked steel plate less than 1.6 mm (1/16 in.) thick that provides equal or better protection against nail or screw penetration shall be permitted.

(D) Limited-Energy Cables without Metallic Cable Armor Through Metal Framing Members.

(1) Limited-Energy Cables without Metallic Armor. In both exposed and concealed locations where limited-energy cables without metallic armor pass through either factory- or field-punched, cut, or drilled slots or holes in metal members, the cable shall be protected by listed bushings or listed grommets covering all metal edges that are securely fastened in the opening prior to installation of the cable.

(2) Limited-Energy Cables Installed in HDPE or ENT. Where nails or screws are likely to penetrate limited-energy cables without a metallic cable armor, where installed in HDPE, ENT, or similar flexible nonmetallic raceways, a protection method as specified in 720.6 shall be used to protect the cable and tubing.

Exception: A listed and marked steel plate less than 1.6 mm (1/16 in.) thick that provides equal or better protection against nail or screw penetration shall be permitted.

(E) Cables and Raceways Parallel to Framing Members and Furring Strips. In both exposed and concealed locations, where a cable- or raceway-type wiring method is installed parallel to framing members, such as joists, rafters, or studs, or is installed parallel to furring strips, the cable or raceway shall be installed and supported so that the nearest outside surface of the cable or raceway is not less than 32 mm (1 ¼ in.) from the nearest edge of the framing member or furring strips where nails or screws are likely to penetrate. Where this distance cannot be maintained, the cable or raceway shall be protected from penetration by nails or screws by a steel plate, sleeve, or equivalent at least 1.6 mm (1/16 in.) thick.

Exception No. 1: Steel plates, sleeves, or the equivalent shall not be required to protect rigid metal conduit, intermediate metal conduit, rigid nonmetallic conduit, or electrical metallic tubing.

Exception No. 2: For concealed work in finished buildings or finished panels for prefabricated buildings where such supporting is impracticable, it shall be permissible to fish the cables between access points.

Exception No. 3: A listed and marked steel plate less than 1.6 mm (1/16 in.) thick that provides equal or better protection against nail or screw penetration shall be permitted.

(F) Cables, Raceways, or Boxes Installed in or Under Metal-Corrugated Roof Decking. A cable, raceway, or box, installed in exposed or concealed locations under metal-corrugated sheet roof decking, shall be installed and supported so there is not less than 38 mm (1 1/2 in.) measured from the lowest surface of the roof decking to the top of the cable, raceway, or box. A cable, raceway, or box shall not be installed in concealed locations in metal-corrugated, sheet decking–type roof.

Note: Roof decking material is often repaired or replaced after the initial raceway or cabling and roofing installation and might be penetrated by screws or other mechanical devices designed to provide "hold down" strength of the waterproof membrane or roof insulating material.

Fittings and boxes, shall not be required to comply with 720.6(G).

Exception No. 2: The 38 mm (1 1/2 in.) spacing is not required where metal-corrugated sheet roof decking is covered with a minimum thickness 50 mm (2 in.) concrete slab, measured from the top of the corrugated roofing.

(G) Cables and Raceways Installed in Shallow Grooves. Cable- or raceway-type wiring methods installed in a groove, to be covered by wallboard, siding, paneling, carpeting, or similar finish, shall be protected by 1.6 mm (1/16 in.) thick steel plate, sleeve, or equivalent or by not less than 32 mm (1 1/4 in.) free space for the full length of the groove in which the cable or raceway is installed.

Exception No. 1: Steel plates, sleeves, or the equivalent shall not be required to protect rigid metal conduit, intermediate metal conduit, rigid PVC conduit, RTRC, or electrical metallic tubing.

Exception No. 2: A listed and marked steel plate less than 1.6 mm (1/16 in.) thick that provides equal or better protection against nail or screw penetration shall be permitted.

(H) Fittings. Where raceways contain limited-energy ~~and communications~~ cables or conductors, and these cables or conductors enter a cabinet, a box, an enclosure, or a raceway, prior to the installation of conductors, the conductors shall be protected in accordance with any of the following:

(1) An identified fitting providing a smoothly rounded insulating surface

(2) A listed metal fitting that has smoothly rounded edges

(3) Separation from the fitting or raceway using an identified insulating material that is securely fastened in place

(4) Threaded hubs or bosses that are an integral part of a cabinet, box, enclosure, or raceway providing a smoothly rounded or flared entry for conductors

Conduit bushings constructed wholly of insulating material shall not be used to secure a fitting or raceway. The insulating fitting or insulating material shall have a temperature rating not less than the insulation temperature rating of the installed conductors.

(I) Structural Joints. A listed expansion/deflection fitting or other approved means shall be used where a raceway crosses a structural joint intended for expansion, contraction, or deflection, used in buildings, bridges, parking garages, or other structures.

(J) In Hoistways. In hoistways, limited-energy ~~and communications~~ cables shall be installed in rigid metal conduit, rigid nonmetallic conduit, intermediate metal conduit, liquidtight flexible nonmetallic conduit, or electrical metallic tubing. For elevators or similar equipment, these conductors shall be permitted to be installed as provided in 620.21.

(K) Safety-Control Equipment. Where damage to limited-energy ~~and communications~~ cables and conductors can result in a failure of safety-control equipment that would introduce a direct fire or life hazard, all such conductors and cables shall be protected from physical damage.

Exception: Room thermostats, water temperature regulating devices, and similar controls used in conjunction with electrically controlled household heating and air conditioning shall not be considered safety-control equipment.

720.7 Protection Against Corrosion and Deterioration. Raceways, cable trays, cablebus, auxiliary gutters, cable armor, boxes, cable sheathing, cabinets, enclosures (other than surrounding fences and walls), elbows, couplings, fittings, supports, and support hardware, installed for use with limited-energy ~~and communications~~ systems, shall be of materials suitable for the environment in which they are to be installed.

(A) Ferrous Metal Equipment. Ferrous metal raceways, cable trays, cablebus, auxiliary gutters, cable armor, boxes, cable sheathing, cabinets, enclosures (other than surrounding fences and walls), elbows, couplings, nipples, fittings, supports, and support hardware shall be suitably protected against corrosion inside and outside (except threads at joints) by a coating of approved corrosion-resistant material. Where corrosion protection is necessary and the conduit is threaded anywhere other than at the factory where the product is listed, the threads shall be coated with an approved electrically conductive, corrosion-resistant compound.

Exception: Stainless steel shall not be required to have protective coatings.

(1) Protected from Corrosion Solely by Enamel. Where protected from corrosion solely by enamel, ferrous metal raceways, cable trays, cablebus, auxiliary gutters, cable armor, boxes, cable sheathing, cabinets, enclosures (other than surrounding fences and walls), elbows, couplings, nipples, fittings, supports, and support hardware shall not be used outdoors or in wet locations as described in 300.6(D).

(2) Organic Coatings on Boxes or Cabinets. Where boxes, cabinets, or enclosures (other than surrounding fences and walls) have an approved system of organic coatings and are marked “Raintight,” “Rainproof,” or “Outdoor Type,” they shall be permitted outdoors.

(3) In Concrete or in Direct Contact with the Earth. Ferrous metal raceways, cable armor, boxes, cable sheathing, cabinets, enclosures (other than surrounding fences and walls), elbows, couplings, nipples, fittings, supports, and support hardware shall be permitted to be installed in concrete, in direct contact with the earth, or in areas subject to severe corrosive influences where made of material approved for the condition or where provided with corrosion protection approved for the condition.

(B) Aluminum Metal Equipment. Aluminum raceways, cable trays, cablebus, auxiliary gutters, cable armor, boxes, cable sheathing, cabinets, enclosures (other than surrounding fences and walls), elbows, couplings, nipples, fittings, supports, and support hardware embedded or encased in concrete or in direct contact with the earth shall be provided with supplementary corrosion protection.

(C) Nonmetallic Equipment. Nonmetallic raceways, cable trays, cablebus, auxiliary gutters, boxes, cables with a nonmetallic outer jacket and internal metal armor or jacket, cable sheathing, cabinets, enclosures (other than surrounding fences and walls), elbows, couplings, nipples, fittings, supports, and support hardware shall be made of material approved for the condition and shall comply with 720.7(C)(1) and 720.7(C)(2) as applicable to the specific installation.

(1) Exposed to Sunlight. Where exposed to sunlight, the materials shall be listed as sunlight resistant or shall be identified as sunlight resistant.

(2) Chemical Exposure. Where subject to exposure to chemical solvents, vapors, splashing, or immersion, materials or coatings shall either be inherently resistant to chemicals based on their listing or be identified for the specific chemical reagent.

(D) Indoor Wet Locations. In portions of dairy processing facilities, laundries, canneries, and other indoor wet locations, and in locations where walls are frequently washed or where there are surfaces of absorbent materials, such as damp paper or wood, the entire wiring system, where installed exposed, including all boxes, cabinets, enclosures (other than surrounding fences and walls), fittings, raceways, and cable used therewith, shall be mounted so that there is at least a 6 mm (¼ in.) airspace between it and the wall or supporting surface.

Exception: Nonmetallic raceways, boxes, and fittings shall be permitted to be installed without the airspace on a concrete, masonry, tile, or similar surface.

Informational Note: In general, areas where acids and alkali chemicals are handled and stored might present such corrosive conditions, particularly when wet or damp. Severe corrosive conditions might also be present in portions of meatpacking plants, tanneries, glue houses, and some stables; in installations immediately adjacent to a seashore and swimming pool areas; in areas where chemical deicers are used; and in storage cellars or rooms for hides, casings, fertilizer, salt, and bulk chemicals.

720.8 Raceways Exposed to Different Temperatures.

(A) Sealing. Where portions of a raceway or sleeve are known to be subjected to different temperatures, and where condensation is known to be a problem, as in cold storage areas of buildings or where passing from the interior to the exterior of a building, the raceway or sleeve shall be sealed to prevent the circulation of warm air to a colder section of the raceway or sleeve. Sealants shall be identified for use with cable insulation, conductor insulation, a bare conductor, a shield, or other components. An explosionproof seal shall not be required for this purpose.

(B) Expansion, Expansion-Deflection, and Deflection Fittings. Raceways shall be provided with expansion, expansion-deflection, or deflection fittings where necessary to compensate for thermal expansion, deflection, and contraction.

Informational Note No. 1: Table 352.44(A) and Table 355.44 provide the expansion information for polyvinyl chloride (PVC) and for reinforced thermosetting resin conduit (RTRC), respectively. A nominal number for steel conduit can be determined by multiplying the expansion length in Table 352.44(A) by 0.20. The coefficient of expansion for steel electrical metallic tubing, intermediate metal conduit, and rigid metal conduit is 1.170×10^{-5} (0.0000117 mm per mm of conduit for each °C in temperature change) [0.650×10^{-5} (0.0000065 in. per in. of conduit for each °F in temperature change)]. A nominal number for aluminum conduit and aluminum electrical metallic tubing can be determined by multiplying the expansion length in Table 352.44(A) by 0.40. The coefficient of expansion for aluminum electrical metallic tubing and aluminum rigid metal conduit is 2.34×10^{-5} (0.0000234 mm per mm of conduit for each °C in temperature change) [1.30×10^{-5} (0.000013 in. per in. of conduit for each °F in temperature change)].

Informational Note No. 2: See NEMA FB 2.40-2019, *Installation Guidelines for Expansion and Expansion/Deflection Fittings*, for further information on expansion and expansion deflection fittings.

720.10 Installation of Limited-Energy ~~and Communications~~ Cables and Conductors with Non-Electrical Systems. Raceways or cable trays containing limited-energy ~~or communications~~ cables and conductors shall not contain any pipe, tube, or other means for steam, water, air, gas, drainage, or any service other than electrical installations as permitted elsewhere in this code.

720.11 Limited-Energy ~~and Communications~~ System Raceways in Wet Locations Above Grade. Where raceways used for limited-energy ~~and communications~~ systems are installed in wet locations above grade, the interior of these raceways shall be considered to be a wet location. Insulated cables and conductors installed in raceways in wet locations above grade shall comply with 310.10(C).
Exception: Communications cables, CATV-type coaxial cables, optical fiber cables and network-powered broadband communications low-power cables shall not be required to be listed for wet locations.

720.14 Mechanical Continuity — Raceways and Cables.

(A) General. Raceways, cable armors, and cable sheaths shall be continuous between cabinets, boxes, conduit bodies, fittings, or other enclosures or outlets.

Exception No. 1: Short sections of raceways used to provide support or protection of cable assemblies from physical damage shall not be required to be mechanically continuous.

Exception No. 2: Raceways and cables installed into the bottom of open bottom equipment shall not be required to be mechanically secured to the equipment.

(B) Limited-Energy ~~and Communications~~ Cables and Conductors Installed in a Raceway. Limited-energy ~~and communications~~ cables and conductors installed in a raceway shall be continuous between outlets, boxes, devices, and so forth, unless specifically permitted elsewhere in this code.

720.19 Supporting Cables and Conductors in Vertical Raceways.

(A) Spacing Intervals — Maximum. Limited-energy ~~and communications~~ cables and conductors in vertical raceways shall be supported in accordance with the following:

(1) At least one support method shall be provided for each conductor at the top of the vertical raceway or as close to the top as practical.

(2) Intermediate supports shall be provided as necessary to limit supported conductor lengths to not greater than 30 m (100 ft).

Exception: Steel wire armor cable shall be supported at the top of the riser with a cable support that clamps the steel wire armor. A safety device shall be permitted at the lower end of the riser to hold the cable in the event there is slippage of the cable in the wire-armored cable support. Additional wedge-type supports shall be permitted to relieve the strain on the equipment terminals caused by expansion of the cable under load.

(B) Fire-Resistive Cables and Conductors. Support methods and spacing intervals for fire-resistive limited-energy ~~and communications~~ cables and conductors shall comply with any restrictions provided in the listing of the electrical circuit protective system or fire-resistive cable system used, and in no case shall the support intervals be lengths greater than 30 m (100 ft).

(C) Support Methods. One of the following methods of support shall be used:

(1) Clamping devices constructed of or employing insulating wedges inserted in the ends of the raceways. Where clamping of insulation does not adequately support the cable, the conductor also shall be clamped.

(2) Inserting boxes at the required intervals in which insulating supports are installed and secured in an approved manner to withstand the weight of the conductors attached thereto, and the boxes are provided with covers.

(3) In junction boxes, deflecting the cables not less than 90 degrees and carrying them horizontally to a distance not less than twice the diameter of the cable, with the cables being carried on two or more insulating supports and additionally secured thereto by tie wires, if desired. Where this method is used, cables shall be supported at intervals not greater than 6 m (20 ft).

(4) Other approved means.

720.21 Spread of Fire or Products of Combustion. Limited-energy ~~and communications~~ cable installations in hollow spaces, vertical shafts, and ventilation or air-handling ducts shall be made so that the possible spread of fire or products of combustion will not be substantially increased. Openings around electrical penetrations into or through fire-resistant-rated walls, partitions, floors, or ceilings shall be firestopped using approved methods to maintain the fire resistance rating.

Informational Note: Directories of electrical construction materials published by qualified testing laboratories contain many listing installation restrictions necessary to maintain the fire-resistive rating of assemblies where penetrations or openings are made. Building codes also contain restrictions on membrane penetrations on opposite sides of a fire-resistance-rated wall assembly. An example is the 600 mm (24 in.) minimum horizontal separation that usually applies between boxes installed on opposite sides of the wall. Assistance in complying with the requirements of 720.21 can be found in building codes, fire resistance directories, and product listings.

720.22 Wiring in Ducts Not Used for Air Handling, Fabricated Ducts for Environmental Air, and Other Spaces for Environmental Air (Plenums). The requirements of this section shall apply to the installation of limited-energy, ~~communications, coaxial-type CATV, conductive optical fiber-type OF conductors,~~ cables, and equipment in ducts used for dust, loose stock, or vapor removal, ducts specifically fabricated for environmental air, and other spaces used for environmental air (plenums).

Informational Note: See Article 424, Part VI for requirements on duct heaters.

(A) Ducts for Dust, Loose Stock, or Vapor Removal. No limited-energy ~~or communications~~ wiring systems of any type shall be installed in ducts used to transport dust, loose stock, or flammable vapors. No wiring system of any type shall be installed in any duct, or shaft containing only such ducts, used for vapor removal or for ventilation of commercial-type cooking equipment.

Exception: Nonconductive fiber optical cables shall be permitted in ducts used for dust, loose stock, or vapor removal.

(B) Ducts Specifically Fabricated for Environmental Air. Limited-energy ~~and communications~~ equipment, devices, and the wiring methods specified in this section shall be permitted within such ducts only if necessary for the direct action upon, or sensing of, the contained air. Where equipment or devices are installed and illumination is necessary to facilitate maintenance and repair, enclosed gasketed-type luminaires shall be permitted.

Only wiring methods consisting of Type MI cable without an overall nonmetallic covering, Type MC cable employing a smooth or corrugated impervious metal sheath without an overall nonmetallic covering, electrical metallic tubing, flexible metallic tubing, intermediate metal conduit, or rigid metal conduit without an overall nonmetallic covering shall be installed in ducts specifically fabricated to transport environmental air. Flexible metal conduit shall be permitted, in lengths not to exceed 1.2 m (4 ft), to connect physically adjustable equipment and devices permitted to be in these fabricated ducts. The connectors used with flexible metal conduit shall effectively close any openings in the connection.

Exception: Wiring methods and cabling systems, listed for use in other spaces used for environmental air (plenums), shall be permitted to be installed in ducts specifically fabricated for environmental air-handling purposes under both of the following conditions:

(1) The wiring methods or cabling systems shall be permitted only if necessary to connect to equipment or devices associated with the direct action upon or sensing of the contained air.

(2) The total length of such wiring methods or cabling systems shall not exceed 1.2 m (4 ft).

(C) Other Spaces Used for Environmental Air (Plenums). This section shall apply to spaces not specifically fabricated for environmental air-handling purposes but used for air-handling purposes as a plenum. This section shall not apply to habitable rooms or areas of buildings, the prime purpose of which is not air handling.

Informational Note No. 1: The space over a hung ceiling used for environmental air-handling purposes is an example of the type of other space to which this section applies.

Informational Note No. 2: See NFPA 90A-2024, *Standard for the Installation of Air-Conditioning and Ventilating Systems*, and other mechanical codes for information on how the term *other spaces used for environmental air (plenum)*, as used in this section, correlates with the use of the term plenum where the plenum is used for return air purposes, as well as some other air-handling spaces.

Informational Note No. 3: Paint, plaster, cleaners, abrasives, corrosive residues, or other contaminants may result in an undetermined alteration of wire and cable properties.

Exception: This section shall not apply to the joist or stud spaces of dwelling units where the wiring passes through such spaces perpendicular to the long dimension of such spaces.

(1) Wiring Methods. The limited-energy ~~and communications~~ cables used in other spaces used for environmental air shall be limited to those cables specifically listed for use within an air-handling space or listed prefabricated cable assemblies of metallic manufactured wiring systems without nonmetallic sheath. Other types of cables, conductors, and raceways shall be permitted to be installed in electrical metallic tubing, flexible metallic tubing, intermediate metal conduit, rigid metal conduit without an overall nonmetallic covering, flexible metal conduit, or, where accessible, surface metal raceway or metal wireway with metal covers.

Informational Note: See UL 2043, *Fire Test for Heat and Visible Smoke Release for Discrete Products and Their Accessories Installed in Air-Handling Spaces*, for one method of testing low smoke and heat release properties for nonmetallic cable ties and other nonmetallic cable accessories to determine a maximum peak optical density of 0.50 or less, an average optical density of 0.15 or less, and a peak heat release rate of 100 kW or less.

(2) Cable Tray Systems. The requirements in 720.22(C)(2)(a) or 720.22(C)(2)(b) shall apply to the use of metallic cable tray systems in other spaces used for environmental air (plenums), where accessible.

(a) *Metal Cable Tray Systems.* Metal cable tray systems shall be permitted to support the wiring methods specified in 720.22(C)(1).

(b) *Solid Side and Bottom Metal Cable Tray Systems.* Solid side and bottom metal cable tray systems with solid metal covers shall be permitted to enclose wiring methods and cables not already covered in 720.22(C)(1) in accordance with 392.10(A) and 392.10(B).

(3) Equipment. Electrical equipment with a metal enclosure, or electrical equipment with a nonmetallic enclosure listed for use within an air-handling space and having low smoke and heat release properties, and associated wiring material suitable for the ambient temperature shall be permitted to be installed in such other spaces unless prohibited elsewhere in this code.

Informational Note No. 1: See UL 2043, *Fire Test for Heat and Visible Smoke Release for Discrete Products and Their Accessories Installed in Air-Handling Spaces*, for one method of testing low smoke and heat release properties to determine that the equipment exhibits a maximum peak optical density of 0.50 or less, an average optical density of 0.15 or less, and a peak heat release rate of 100 kW or less.
Informational Note No. 2: See NFPA 90A-2024, *Standard for the Installation of Air Conditioning and Ventilating Systems*, for information on listing discrete products as having low smoke and hear release properties.

Exception: Integral fan systems shall be permitted where specifically identified for use within an air-handling space.

(4) Plenum Cable Ties. Cable ties intended for use in other space used for environmental air (plenums) shall be listed as having low smoke and heat release properties.

Informational Note No. 1: See UL 2043, Fire Test for Heat and Visible Smoke Release for Discrete Products and Their Accessories Installed in Air-Handling Spaces, for one method of testing low smoke and heat release properties to determine that the equipment exhibits a maximum peak optical density of 0.50 or less, an average optical density of 0.15 or less, and a peak heat release rate of 100 kW or less.

Informational Note No. 2: See NFPA 90A-2024, Standard for the Installation of Air Conditioning and Ventilating Systems, for information on listing discrete products as having low smoke and hear release properties.

720.23 Panels Designed to Allow Access. Cables, raceways, and equipment installed behind panels designed to allow access, including suspended ceiling panels, shall be arranged and secured in accordance with the following:

(1) Removal of the panels and access to the equipment allowed

(2) Access to electrical equipment not denied by an accumulation of cables

720.24 Bends. Where a single run is made up of one or more raceway type wiring methods, maximum degrees of bends shall not exceed 360.

720.25 Abandoned Cables. The accessible portion of abandoned cables shall be removed. Where cables are identified for future use with a tag, the tag shall be of sufficient durability to withstand the environment involved.

~~**720.27 Temperature Limitations of Limited-Energy Conductors and Cables.** Limited-energy and communications cables and conductors shall be installed in accordance with 722.27 for temperature limitations.~~

720.30 Securing and Supporting.

(A) Secured in Place.

(1) Raceways, Cable Assemblies, Boxes, Cabinets, and Fittings. Raceways, cable assemblies, boxes, cabinets, and fittings shall be securely fastened in place.

(2) Limited-Energy ~~and Communications~~ Cables. Limited-energy ~~and communications~~ cables installed on the surface of ceilings and sidewalls shall be supported by the building structure in such a manner that the cables will not be damaged by normal building use.

(B) Wiring Systems Installed Above Suspended Ceilings. Support wires that do not provide secure support shall not be the sole support. Support wires and associated fittings that provide secure support and that are installed in addition to the ceiling grid support wires shall be permitted as the sole support. Where independent support wires are used, they shall be secured at both ends. Cables and raceways shall not be supported by ceiling grids.

(C) Fire-Rated Assemblies. Wiring located within the cavity of a fire-rated floor-ceiling or roof-ceiling assembly shall not be secured to, or supported by, the ceiling assembly, including the ceiling support wires. An independent means of secure support shall be provided and shall be permitted to be attached to the assembly. Where independent support wires are used, they shall be distinguishable by color, tagging, or other effective means from those that are part of the fire-rated design.

Exception: The ceiling support system shall be permitted to support wiring and equipment that have been tested as part of the fire-rated assembly.

Informational Note: See ASTM E119, *Standard Test Methods for Fire Tests of Building Construction and Materials*, for one method of testing to determine fire rating.

(D) Non-Fire-Rated Assemblies. Wiring located within the cavity of a non-fire-rated floor-ceiling or roof-ceiling assembly shall not be secured to, or supported by, the ceiling assembly, including the ceiling support wires. An independent means of secure support shall be provided and shall be permitted to be attached to the assembly. If independent support wires are used, they shall be distinguishable by color, tagging, or other effective means.

Exception: The ceiling support system shall be permitted to support branch-circuit wiring and associated equipment if installed in accordance with the ceiling system manufacturer's instructions.

(E) Raceways Used as Means of Support. Raceways shall be used only as a means of support for other raceways, cables, or nonelectrical equipment under any of the following conditions:

(1) If the raceway or means of support is identified as a means of support

(2) If the raceway contains power supply conductors for electrically controlled equipment and is used to support Class 2 or Class 3 circuit conductors or cables that are solely for the purpose of connection to the equipment control circuits

(3) Overhead (aerial) spans of optical fiber ~~type OF~~ cables, communications drop wires, communications cables, ~~and~~ coaxial-CATV cables and network-powered broadband communications low-power cables attached to the exterior of a raceway-type mast intended for the attachment and support of such cables, and where not prohibited elsewhere in this code.

(F) Cables Not Used as Means of Support. Cable wiring methods shall not be used as a means of support for other cables, raceways, or nonelectrical equipment.

(G) Spaces Used for Environmental Air (Plenums). If nonmetallic cable supports and other nonmetallic cable accessories are used to secure and support cables installed in other locations used for environmental air (plenums), they shall be listed as having low-smoke and heat-release properties in accordance with 720.22(C)(3).

Informational Note No. 1: See ANSI/BICSI N1-2019, *Installation Practices for Telecommunications and IC Cabling and Related Cabling Infrastructure*; ANSI/TIA-568.1- E-2020, *Commercial Building Telecommunications Infrastructure Standard*; ANSI/TIA-569-E-2019, *Telecommunications Pathways and Spaces*; ANSI/TIA-570-C-2012, Residential Telecommunications Infrastructure Standard; ANSI/TIA-1005-A-2012, *Telecommunications Infrastructure Standard for Industrial Premises*; ANSI/ TIA-1179-A-2017, *Healthcare Facility Telecommunications Infrastructure Standard*; ANSI/TIA-4966-2014, *Telecommunications Infrastructure Standard for Educational Facilities*; ANSI/NECA/FOA 301-2016, *Standard for Installing and Testing Fiber Optic Cables*, ANSI/TIA-568.0-d-2015, *General Telecommunications Cabling for Customer Premises*, and ANSI/TIA-568.3-d-2016, *Optical Fiber Cabling and Components Standard*, and other ANSI-approved installation standards for accepted industry practices.

Informational Note No. 2: See NFPA 90A-2024, *Standard for the Installation of Air-Conditioning and Ventilating Systems*, 8.5.5.6 for listing information of discrete combustible components installed in accordance with 300.25(C).

Informational Note No. 3: Paint, plaster, cleaners, abrasives, corrosive residues, or other contaminants may result in an undetermined alteration of wire and cable properties.

720.32 Boxes, Conduit Bodies, or Fittings-Where Required. A box or conduit body shall not be required where cables enter or exit from conduit or tubing that is used to provide cable support or protection against physical damage. A fitting shall be provided on the end(s) of the conduit or tubing to protect the cable from abrasion.

Public Comment No. 1372-NFPA 70-2024 [Section No. 720.1]

720.1 Scope.

(A) Limited-Energy System Installations.

This article covers the general wiring methods and materials requirements for ~~Class 1 power-~~ limited- ~~circuits, Class 2 circuits, Class 3 circuits, Class 4 circuits, optical fiber systems, communications systems, antenna systems, community antenna systems, network-powered broadband communications systems, premises-powered broadband communications systems, and power-limited fire alarm systems~~ -energy system installations .

Informational Note: See 800.1 for general requirements of communications installations outside of a building.

(B) Integral Parts of Equipment.

The requirements of this article are not intended to apply to the conductors that form an integral part of equipment, such as listed utilization equipment.

Additional Proposed Changes

File Name	Description	Approved
Limited_Energy_Roster-2026_2nd_Draft.pdf	Limited-Energy Task Group Roster-2nd Draft	

Statement of Problem and Substantiation for Public Comment

This public comment is submitted on behalf of the Limited-Energy Task Group (see attached roster) to modify the scope of Article 720 to include the term limited-energy system as this not only simplifies the scope but makes the coverage of Article 720 more inclusive.
See companion PC-1370

Related Public Comments for This Document

Related Comment	Relationship
Public Comment No. 1370-NFPA 70-2024 [Definition: Limited-Energy System.]	Revised definition of Limited-Energy System

Related Item

- FCR-221

Submitter Information Verification

Submitter Full Name: Kyle Krueger
Organization: NECA
Affiliation: NECA
Street Address:
City:
State:
Zip:

Submittal Date: Wed Aug 21 15:44:11 EDT 2024
Committee: NEC-P03

Limited Energy Task Group [2nd Draft]					
No.	First Name	Last Name	Class.	Organization	Other Committees
1	Kyle	Krueger	[I/M]	NECA	NEC-Correlating Comittee CMP 3 NFPA 72-Correlating Committee
2	Ernie	Gallo	[U/T]	NEBScore	
3	Derrick	Atkins	[L]	Minneapolis Electrical JA	NEC-Correlating Committee CMP 5
4	Anthony	Tassone	[R/T]	UL Solutions	CMP 3 CMP 16
5	Chad	Jones	[M]	Cisco	CMP 3
6	Sam	Rokowski	[I/M]	Maddox Inc.	CMP 3
7	George	Bish	[M]	Amazon/Ring Protect Inc	CMP 16
8	Trevor	Bowmer	[U]	Telecom Consulting	NEC Correlating Committee CMP 16
9	Ronald	Tellas	[M]	CCCA	CMP 3 CMP 16
10	Tim	Mikloiche	[E]	IAEI	CMP 3
11	Ryan	Jackosn	[M]	Steel Tube Industry	CMP 3
12	Diana	Lettkeman	[M]	Dish	CMP 16
13	John	Kacperski	[L]	IBEW	CMP 16

Public Comment No. 877-NFPA 70-2024 [Section No. 720.1]

720.1 Scope.

(A) ~~Limited-Energy Installations~~ Covered .

This article covers the general wiring methods and materials requirements for Class 1 power-limited circuits, Class 2 circuits, Class 3 circuits, Class 4 circuits, optical fiber systems, communications systems, antenna systems, community antenna systems, network-powered broadband communications systems, premises-powered broadband communications systems, and power-limited fire alarm systems.

Informational Note: See 800.1 for general requirements of communications installations outside of a building.

(B) ~~Integral Parts of Equipment~~ Not Covered .

~~The requirements of this article are not intended to~~ This article does not apply to the conductors that form an integral part of equipment, such as listed utilization equipment.

Statement of Problem and Substantiation for Public Comment

The main purpose of this comment is to change (B) to remove the statement of intent and replace it with enforceable language. Using (A) as "covered" and (B) as "not covered" also provides consistency with other articles.

Related Public Comments for This Document

Related Comment	Relationship
Public Comment No. 863-NFPA 70-2024 [Section No. 300.1]	Similar comment to 300.1

Related Item

- FCR 221

Submitter Information Verification

Submitter Full Name: Ryan Jackson
Organization: Self-employed
Street Address:
City:
State:
Zip:

Submittal Date: Wed Aug 07 11:44:12 EDT 2024
Committee: NEC-P03

Public Comment No. 332-NFPA 70-2024 [Section No. 720.1(A)]

(A) Limited-Energy Installations.

This article covers the general wiring methods and materials requirements for ~~Class 1 power-limited circuits~~ optical fiber cables , Class 2 circuits, Class 3 circuits, Class 4 circuits, ~~optical fiber systems,~~ communications systems, antenna systems, community antenna and radio distribution systems, network-powered broadband communications low-power systems, premises-powered broadband communications systems, and power-limited fire alarm systems.

Informational Note: See 800.1 for general requirements of communications installations outside of a building.

Statement of Problem and Substantiation for Public Comment

The purpose of this PC is to narrow the scope of new Article 720 to correlate with the list of limited energy cables in Article 722.
Accordingly, the following text changes are recommended:
1- Delete Class 1 power limited circuits since these circuits are not limited energy circuits.
2- Change optical fiber systems to optical fiber cables because the NEC scope only covers optical fiber cables, not systems.
3- Restrict the coverage of network-powered broadband communications systems to “low-power of network-powered broadband communications systems” since only the low-power systems are limited energy.

Related Public Comments for This Document

Related Comment	Relationship
Public Comment No. 127-NFPA 70-2024 [New Section after 722.1]	722.2 Listing of Limited-Energy Cables
Public Comment No. 1619-NFPA 70-2024 [Article 720]	

Related Item

- Global FCR-221

Submitter Information Verification

Submitter Full Name: David Kiddoo
Organization: CCCA
Affiliation: Communications Cable & Connectivity Association
Street Address:
City:
State:
Zip:

Submittal Date: Tue Jul 30 05:49:06 EDT 2024
Committee: NEC-P03

Public Comment No. 923-NFPA 70-2024 [Section No. 720.1(A)]

(A) Limited-Energy Installations.

This article covers the general wiring methods and materials requirements for Class ~~1 power-limited circuits, Class~~ 2 circuits, Class 3 circuits, Class 4 circuits, optical fiber systems, communications systems, antenna systems, community antenna systems, network-powered broadband communications systems, premises-powered broadband communications systems, and power-limited fire alarm systems.

Informational Note: See 800.1 for general requirements of communications installations outside of a building.

Statement of Problem and Substantiation for Public Comment

Class 1 circuits are safe as it relates to electric shock, but are not safe as it relates to fire initiation. As such, CMP 3 deliberately removed them from Article 725 and kept them out of the limited energy requirements created in 2023 and being expanded in 2026. A Class 1 circuit needs to comply with Article 300, as indicated in the new Article 206. Please do not lump Class 1 systems in with the other material in this article.

Related Item

- FCR 221

Submitter Information Verification

Submitter Full Name: Ryan Jackson
Organization: Self-employed
Street Address:
City:
State:
Zip:

Submittal Date: Wed Aug 07 15:52:16 EDT 2024
Committee: NEC-P03

Public Comment No. 1504-NFPA 70-2024 [Section No. 720.2]

720.2 Listing.

Communications equipment shall be listed as being suitable for electrical connection to a communications network.

Exception: This listing requirement shall not apply to test equipment that is intended for temporary connection to a telecommunications network by qualified persons during the course of installation, maintenance, or repair of telecommunications equipment or systems.

Informational Note~~- No. 1~~ : See ~~ANSI/UL 60950-1-2014,~~ ~~*Standard for Safety of Information Technology Equipment, ANSI/UL 1863-2012, Standard for Safety Communications Circuit Accessories*~~ , ~~or ANSI/UL 62368-1-2014 or ANSI/UL 62368-1-2018,~~ ~~*Audio/Video, Information and Communication Technology Equipment — Part 1: Safety Requirements*~~ . ~~Informational Note No. 2:~~ ~~See ANSI/ATIS 0600337-2016~~ ATIS 0600337-2019(R2014) , *Requirements for Maximum Voltage, Current, and Power Levels Used in Communications Circuits*, for additional information regarding voltages, currents, and power allowed on communications circuits.

Additional Proposed Changes

File Name	Description	Approved
Limited_Energy_Roster-2026_2nd_Draft.pdf	Limited-Energy Task Group Roster-2nd Draft	

Statement of Problem and Substantiation for Public Comment

This public comment is submitted on behalf of the Limited-Energy Task Group (see attached roster) to delete Informational Note 1 and update info note 2 of section 720.2(A) to reflect the correct edition and titles of the referenced Standards.

Related Item

- FCR-221

Submitter Information Verification

Submitter Full Name: Kyle Krueger
Organization: NECA
Affiliation: NECA
Street Address:
City:
State:
Zip:

Submittal Date: Fri Aug 23 16:02:14 EDT 2024
Committee: NEC-P03

Limited Energy Task Group [2nd Draft]					
No.	First Name	Last Name	Class.	Organization	Other Committees
1	Kyle	Krueger	[I/M]	NECA	NEC-Correlating Comittee CMP 3 NFPA 72-Correlating Committee
2	Ernie	Gallo	[U/T]	NEBScore	
3	Derrick	Atkins	[L]	Minneapolis Electrical JA	NEC-Correlating Committee CMP 5
4	Anthony	Tassone	[R/T]	UL Solutions	CMP 3 CMP 16
5	Chad	Jones	[M]	Cisco	CMP 3
6	Sam	Rokowski	[I/M]	Maddox Inc.	CMP 3
7	George	Bish	[M]	Amazon/Ring Protect Inc	CMP 16
8	Trevor	Bowmer	[U]	Telecom Consulting	NEC Correlating Committee CMP 16
9	Ronald	Tellas	[M]	CCCA	CMP 3 CMP 16
10	Tim	Mikloiche	[E]	IAEI	CMP 3
11	Ryan	Jackosn	[M]	Steel Tube Industry	CMP 3
12	Diana	Lettkeman	[M]	Dish	CMP 16
13	John	Kacperski	[L]	IBEW	CMP 16

Public Comment No. 333-NFPA 70-2024 [Section No. 720.2]

720.2 Listing.

Communications equipment shall be listed as being suitable for electrical connection to a communications network.

Exception: This listing requirement shall not apply to test equipment that is intended for temporary connection to a telecommunications network by qualified persons during the course of installation, maintenance, or repair of telecommunications equipment or systems.

Informational Note No. 1: See ~~ANSI/~~ UL 60950-1-~~2014~~ 2007 , ~~*Standard for Safety of*~~ *Information Technology Equipment,* ~~*ANSI/*~~ *UL 1863-*~~*2012*~~ *2004* , ~~*Standard for Safety*~~ *Communications Circuit Accessories*, or ~~ANSI/~~ UL 62368-1-2014 or ~~ANSI/~~ UL 62368-1-~~2018~~ 2019 , *Audio/Video, Information and Communication Technology Equipment — Part 1: Safety Requirements*.

Informational Note No. 2: See ANSI/ATIS 0600337-2016, *Requirements for Maximum Voltage, Current, and Power Levels Used in Communications Circuits*, for additional information regarding voltages, currents, and power allowed on communications circuits.

Statement of Problem and Substantiation for Public Comment

The UL references were updated.

Related Public Comments for This Document

Related Comment	Relationship
Public Comment No. 1619-NFPA 70-2024 [Article 720]	

Related Item

- Global FCR-221

Submitter Information Verification

Submitter Full Name: David Kiddoo
Organization: CCCA
Affiliation: Communications Cable & Connectivity Association
Street Address:
City:
State:
Zip:

Submittal Date: Tue Jul 30 06:01:20 EDT 2024
Committee: NEC-P03

Public Comment No. 1505-NFPA 70-2024 [Section No. 720.4]

720.4 Other Articles.

(A) – General Requirements.

Only those sections of Article 300 referenced in this article shall apply.

(B) Other Limited-Energy Articles.

Table 720.4(~~A~~ B) lists the limited-energy installations covered by these general requirements.

Table 720.4(~~A~~ B) Other Articles for Limited-Energy Installations.

Application	Code Section
Limited-energy power sources	721.1
Limited-energy cables for power-limited circuits, fault-managed power circuits, optical fiber circuits, and communications circuits	722.1
Class 1 power-limited circuits and equipment	724.1
Class 2 and Class 3 power-limited circuits and equipment	725.1
Class 4 fault-managed power circuits and equipment	726.1
Overvoltage protection of limited-energy and communications systems	742.1
Limited-energy system grounding	750.1
Fire alarm systems	760.1
Fire-resistive cable systems — Type FR	772.1
General requirements for communications systems outside and entering building	800.1
Antenna systems	810.1
Community antenna and television and radio distribution systems	820.1
Network-powered broadband communications systems	830.1
Premises-powered broadband communications systems	840.1

(~~B~~ C) Hazardous Locations.

Limited-energy and communications cables and equipment shall be permitted to be used in hazardous (classified) locations as defined in 500.5 and 500.6 where specifically permitted elsewhere in this code.

Additional Proposed Changes

File Name	Description	Approved
Limited_Energy_Roster-2026_2nd_Draft.pdf	Limited-Energy Task Group Roster-2nd Draft	

Statement of Problem and Substantiation for Public Comment

This public comment is submitted on behalf of the Limited-Energy Task Group (see attached roster) to add new section to 720.4(A) to make it clear Article 300 only applies when referenced for limited-energy system installations. This new section makes it clear that Article 720 provides the general installation requirements for Limited-Energy installations.

Related Item

- FCR-221

Submitter Information Verification

Submitter Full Name: Kyle Krueger
Organization: NECA
Affiliation: NECA
Street Address:
City:
State:
Zip:

Submittal Date: Fri Aug 23 16:06:24 EDT 2024
Committee: NEC-P03

Limited Energy Task Group [2nd Draft]					
No.	First Name	Last Name	Class.	Organization	Other Committees
1	Kyle	Krueger	[I/M]	NECA	NEC-Correlating Comittee CMP 3 NFPA 72-Correlating Committee
2	Ernie	Gallo	[U/T]	NEBScore	
3	Derrick	Atkins	[L]	Minneapolis Electrical JA	NEC-Correlating Committee CMP 5
4	Anthony	Tassone	[R/T]	UL Solutions	CMP 3 CMP 16
5	Chad	Jones	[M]	Cisco	CMP 3
6	Sam	Rokowski	[I/M]	Maddox Inc.	CMP 3
7	George	Bish	[M]	Amazon/Ring Protect Inc	CMP 16
8	Trevor	Bowmer	[U]	Telecom Consulting	NEC Correlating Committee CMP 16
9	Ronald	Tellas	[M]	CCCA	CMP 3 CMP 16
10	Tim	Mikloiche	[E]	IAEI	CMP 3
11	Ryan	Jackosn	[M]	Steel Tube Industry	CMP 3
12	Diana	Lettkeman	[M]	Dish	CMP 16
13	John	Kacperski	[L]	IBEW	CMP 16

Public Comment No. 880-NFPA 70-2024 [Section No. 720.4]

720.4 Other ~~Articles~~ Requirements .

~~**(A)** Other Limited-Energy Articles.~~

Table 720.4(A) lists the limited-energy installations covered by these general requirements.

Table 720.4(A) Other Articles for Limited-Energy Installations.

Application	Code Section
Limited-energy power sources	721.1
Limited-energy cables for power-limited circuits, fault-managed power circuits, optical fiber circuits, and communications circuits	722.1
Class 1 power-limited circuits and equipment	724.1
Class 2 and Class 3 power-limited circuits and equipment	725.1
Class 4 fault-managed power circuits and equipment	726.1
Overvoltage protection of limited-energy and communications systems	742.1
Limited-energy system grounding	750.1
Fire alarm systems	760.1
Fire-resistive cable systems — Type FR	772.1
General requirements for communications systems outside and entering building	800.1
Antenna systems	810.1
Community antenna and television and radio distribution systems	820.1
Network-powered broadband communications systems	830.1
Premises-powered broadband communications systems	840.1

~~**(B)** Hazardous Locations.~~

~~Limited-energy and communications cables and equipment shall be permitted to be used in hazardous (classified) locations as defined in 500.5 and 500.6 where specifically permitted elsewhere in this code.~~

Statement of Problem and Substantiation for Public Comment

The title of this section needs to be changed to comply with 4.1.5 of the NEC Style Manual, which specifies the title "Other Requirements."
The material in (B) is not needed because Articles 500-516 already address the matter adequelty. If the committee wishes to reatin this unnecessary information, however, it should at least revise it to point to sections 500.5, 505.5, and 506.5. Also, change "defined" to "indicated," as the sectiona cited do not "define" anything. Additionaly, 500.6 does not classify the location, that is done in 500.5. But, again, none of this is really needed due to 90.3.

Related Item

- FCR 221

Submitter Information Verification

Submitter Full Name: Ryan Jackson
Organization: Self-employed
Street Address:
City:
State:
Zip:

Submittal Date: Wed Aug 07 11:52:58 EDT 2024
Committee: NEC-P03

Public Comment No. 1306-NFPA 70-2024 [Section No. 720.4(A)]

(A) Other Limited-Energy Articles.

Table 720.4(A) lists the limited-energy installations covered by these general requirements.

Table 720.4(A) Other Articles for Limited-Energy Installations.

~~724~~

Application	Code Section	
Limited-energy power sources	721.1	
Limited-energy cables for power-limited circuits, fault-managed power circuits, optical fiber circuits, and communications circuits	722.1	~~Class 1 power-limited circuits and equipment~~
Raceways, Cable Routing Assemblies, and Cable Trays for Limited-Energy Systems	723 .1	
Class 2 and Class 3 power-limited circuits and equipment	725.1	
Class 4 fault-managed power circuits and equipment	726.1	
Overvoltage protection of limited-energy and communications systems	742.1	
Limited-energy system grounding	750.1	
Fire alarm systems	760.1	
Fire-resistive cable systems — Type FR	772.1	
General requirements for communications systems outside and entering building	800.1	
Antenna systems	810.1	
Community antenna and television and radio distribution systems	820.1	
Network-powered broadband communications systems	830.1	
Premises-powered broadband communications systems	840.1	

Additional Proposed Changes

File Name	Description	Approved
Limited_Energy_Roster-2026_2nd_Draft.pdf	Limited-Energy Task Group Roster-2nd Draft	

Statement of Problem and Substantiation for Public Comment

This public comment is submitted on behalf of then Limited-Energy Task Group (see attached roster) to update the Table 720.4(A) to remove the reference to 724.1 as Class 1 Power-Limited is not limited energy and also revised to include the new Article/Scope in section 723.1 as this is a new article for raceways, cable assemblies and cable trays for limited-energy created by companion public comment submitted by this Task Group.
See companion PC-1312.

Related Public Comments for This Document

Related Comment	Relationship
Public Comment No. 1312-NFPA 70-2024 [New Section after 722.182]	PC to create new Article 723 for Raceways, Cable Routing Assemblies and Cable Trays for Limited-Energy Installations

Related Item

- FCR-221

Submitter Information Verification

Submitter Full Name: Kyle Krueger
Organization: NECA
Affiliation: NECA
Street Address:
City:
State:
Zip:

Submittal Date: Tue Aug 20 13:18:21 EDT 2024
Committee: NEC-P03

Limited Energy Task Group [2nd Draft]					
No.	First Name	Last Name	Class.	Organization	Other Committees
1	Kyle	Krueger	[I/M]	NECA	NEC-Correlating Comittee CMP 3 NFPA 72-Correlating Committee
2	Ernie	Gallo	[U/T]	NEBScore	
3	Derrick	Atkins	[L]	Minneapolis Electrical JA	NEC-Correlating Committee CMP 5
4	Anthony	Tassone	[R/T]	UL Solutions	CMP 3 CMP 16
5	Chad	Jones	[M]	Cisco	CMP 3
6	Sam	Rokowski	[I/M]	Maddox Inc.	CMP 3
7	George	Bish	[M]	Amazon/Ring Protect Inc	CMP 16
8	Trevor	Bowmer	[U]	Telecom Consulting	NEC Correlating Committee CMP 16
9	Ronald	Tellas	[M]	CCCA	CMP 3 CMP 16
10	Tim	Mikloiche	[E]	IAEI	CMP 3
11	Ryan	Jackosn	[M]	Steel Tube Industry	CMP 3
12	Diana	Lettkeman	[M]	Dish	CMP 16
13	John	Kacperski	[L]	IBEW	CMP 16

Public Comment No. 334-NFPA 70-2024 [Section No. 720.4(A)]

(A) Other Limited-Energy Articles.

Table 720.4(A) lists the limited-energy installations covered by these general requirements.

Table 720.4(A) Other Articles for Limited-Energy Installations.

Application	Code Section		
Limited-energy power sources	721.1		
Limited-energy cables for power-limited circuits, fault-managed power circuits, optical fiber circuits, and communications circuits	722.1		
Class ~~1 power-limited circuits and equipment~~	~~724.1~~	~~Class~~ 2 and Class 3 power-limited circuits and equipment	725.1
Class 4 fault-managed power circuits and equipment	726.1		
Overvoltage protection of limited-energy and communications systems	742.1		
Limited-energy system grounding	750.1		
Fire alarm systems	760.1		
Fire-resistive cable systems — Type FR	772.1		
General requirements for communications systems outside and entering building	800.1		
Antenna systems	810.1		
Community antenna and television and radio distribution systems	820.1		
Network-powered broadband communications systems	830.1		
Premises-powered broadband communications systems	840.1		

Statement of Problem and Substantiation for Public Comment

Class 1 power limited circuits were deleted because these circuits are not limited energy circuits.

The formatting of the table was changed by TerraView. That is not part of this PC.

Related Public Comments for This Document

Related Comment	Relationship
Public Comment No. 127-NFPA 70-2024 [New Section after 722.1]	722.2 Listing of Limited-Energy Cables
Public Comment No. 1619-NFPA 70-2024 [Article 720]	

Related Item

- Global FCR-221

Submitter Information Verification

Submitter Full Name: David Kiddoo
Organization: CCCA
Affiliation: Communications Cable & Connectivity Association
Street Address:
City:
State:
Zip:

Submittal Date: Tue Jul 30 06:09:59 EDT 2024
Committee: NEC-P03

Public Comment No. 1343-NFPA 70-2024 [Section No. 720.4(B)]

(B) Hazardous Locations.

Limited-energy ~~and communications~~ cables and equipment shall be permitted to be used in hazardous (classified) locations as defined in 500.5 and 500.6 where specifically permitted elsewhere in this code.

Statement of Problem and Substantiation for Public Comment

Communications cables are limited energy cables. It is redundant to refer to “limited energy and communications cables”; “limited energy cables is sufficient.

Related Public Comments for This Document

Related Comment	Relationship
Public Comment No. 127-NFPA 70-2024 [New Section after 722.1]	722.2 Listing of Limited-Energy Cables
Public Comment No. 1619-NFPA 70-2024 [Article 720]	

Related Item

- Global FCR-221

Submitter Information Verification

Submitter Full Name: David Kiddoo
Organization: CCCA
Affiliation: Communications Cable & Connectivity Association
Street Address:
City:
State:
Zip:

Submittal Date: Tue Aug 20 21:41:31 EDT 2024
Committee: NEC-P03

Public Comment No. 1689-NFPA 70-2024 [Section No. 720.5]

720.5 Underground Installations.

(A) Wet Locations.

The interior of enclosures or raceways installed underground shall be considered to be a wet location. Insulated conductors and cables installed in these enclosures or raceways in underground installations shall comply with 722.2(A)(11).

Exception: The requirements of 310.10(C) shall not apply to communications Type CM cables and conductors and coaxial-type CATV cables.

(B) Pools.

Limited-energy and communications cables located under the pool or within the area extending 1.5 m (5 ft) horizontally from the inside wall of the pool shall meet those requirements specified in 680.11.

~~**(C)** Underground Cables and Conductors Under Buildings.~~

~~Underground limited-energy and communications cable and conductors installed under a building shall be in a raceway.~~

~~**(D)** Protection from Damage when Emerging from Grade.~~

~~Direct-buried limited-energy and communications conductors and cables emerging from grade shall be protected by enclosures or raceways extending from the minimum cover distance below grade required by 720.5(A) to a point at least 2.5 m (8 ft) above finished grade. In no case shall the protection be required to exceed 450 mm (18 in.) below finished grade.~~

~~**(E)** Splices and Taps.~~

~~Direct-buried limited-energy and communications conductors or cables shall be permitted to be spliced or tapped without the use of splice boxes. The splices or taps shall be made in accordance with 110.14(B) .~~

~~**(F)** Backfill.~~

~~Backfill that contains large rocks, paving materials, cinders, large or sharply angular substances, or corrosive material shall not be placed in an excavation where materials might damage raceways, cables, conductors, or other substructures or prevent adequate compaction of fill or contribute to corrosion of raceways, cables, or other substructures.~~

~~Where necessary to prevent physical damage to the raceway, cable, or conductor, protection shall be provided in the form of granular or selected material, suitable running boards, suitable sleeves, or other approved means.~~

~~**(G)** Bushing.~~

~~A bushing or terminal fitting with an integral bushed opening shall be used at the end of a conduit or other raceway that terminates underground where the conductors or cables emerge as a direct burial wiring method. A seal incorporating the physical protection characteristics of a bushing shall be permitted to be used in lieu of a bushing.~~

~~**(H)** Earth Movement.~~

~~Where direct-buried conductors, raceways, or cables are subject to movement by settlement or frost, direct-buried conductors, raceways, or cables shall be arranged so as to prevent damage to the enclosed conductors or to equipment connected to the raceways.~~

~~Informational Note:~~

~~This section recognizes "S" loops in underground direct burial cables and conductors to raceway transitions, expansion fittings in raceway risers to fixed equipment, and, generally, the provision of flexible connections to equipment subject to settlement or frost heaves.~~

(

~~I)~~ ~~Directional Boring.~~

~~Cables or raceways installed using directional boring equipment shall be approved for the purpose.~~

~~(**J)** Separation From Light or Power, Non-Power-Limited Fire Alarm, or Class 1 Circuits.~~

~~Direct-buried limited-energy and communication wires and cables shall be separated at least 300 mm (12 in.) from conductors of any light or power, non-power-limited fire alarm circuit conductors, or Class 1 circuit.~~

~~*Exception Informational Note No. 1: Separation shall not be required if electric service conductors or all the direct-buried communications wires and cables, CATV-type coaxial cables, and network-powered broadband communications cables are installed in raceways or have metal cable armor.*~~

~~*Exception Informational Note No. 2: Separation shall not be required under one of the following conditions:*~~

~~*(1) If the electric light or power branch-circuit or feeder conductors or Class 1 circuit conductors are installed in a raceway or in metal-sheathed, metal-clad, or Type UF or Type USE cables*~~

~~*(2) If all the direct-buried communications wires cables, CATV-type coaxial cables, and network-powered broadband communications cables have metal cable armor or are installed in raceway*~~

Statement of Problem and Substantiation for Public Comment

The requirements found in the deleted first level subdivisions are covered by rules in 300.7 and do not modify the rules found in 300.7. General requirements contained in Chapters 1 through 4 shall not be repeated in other articles of the document per section 4.1,1 of the National Electrical Code Style Manual.
720.5(C) = 300.7(C)
720.5(D) = 300.7(D)
720.5(E) = 300.7(E)
720.5(F) = 300.5(F)
720.5(H) = 300.5(J)
720.5(I) = 300.5(K)

Related Item

• NEC_Global_FCR-221_Article_720-new_for_ballot.pdf

Submitter Information Verification

Submitter Full Name: Don Ganiere
Organization: none

Street Address:	
City:	
State:	
Zip:	
Submittal Date:	Mon Aug 26 12:16:23 EDT 2024
Committee:	NEC-P03

Public Comment No. 1875-NFPA 70-2024 [Section No. 720.5]

720.5 ~~Underground~~ Installations.

(A) – General

Limited-energy installations covered by this article shall be performed by qualified persons.

(B) Underground Installations

(1) Wet Locations.

The interior of enclosures or raceways installed underground shall be considered to be a wet location. Insulated conductors and cables installed in these enclosures or raceways in underground installations shall comply with 722.2(A)(11).

Exception: The requirements of 310.10(C) shall not apply to communications Type CM cables and conductors and coaxial-type CATV cables.

(~~B~~ 2) Pools.

Limited-energy and communications cables located under the pool or within the area extending 1.5 m (5 ft) horizontally from the inside wall of the pool shall meet those requirements specified in 680.11.

(~~C~~ 3) Underground Cables and Conductors Under Buildings.

Underground limited-energy and communications cable and conductors installed under a building shall be in a raceway.

(~~D~~ 4) Protection from Damage when Emerging from Grade.

Direct-buried limited-energy and communications conductors and cables emerging from grade shall be protected by enclosures or raceways extending from the minimum cover distance below grade required by 720.5(A) to a point at least 2.5 m (8 ft) above finished grade. In no case shall the protection be required to exceed 450 mm (18 in.) below finished grade.

(~~E~~ 5) Splices and Taps.

Direct-buried limited-energy and communications conductors or cables shall be permitted to be spliced or tapped without the use of splice boxes. The splices or taps shall be made in accordance with 110.14(B).

(~~F~~ 6) Backfill.

Backfill that contains large rocks, paving materials, cinders, large or sharply angular substances, or corrosive material shall not be placed in an excavation where materials might damage raceways, cables, conductors, or other substructures or prevent adequate compaction of fill or contribute to corrosion of raceways, cables, or other substructures.

Where necessary to prevent physical damage to the raceway, cable, or conductor, protection shall be provided in the form of granular or selected material, suitable running boards, suitable sleeves, or other approved means.

(~~G~~ 7) Bushing.

A bushing or terminal fitting with an integral bushed opening shall be used at the end of a conduit or other raceway that terminates underground where the conductors or cables emerge as a direct burial wiring method. A seal incorporating the physical protection characteristics of a bushing shall be permitted to be used in lieu of a bushing.

(~~H~~ 8) Earth Movement.

Where direct-buried conductors, raceways, or cables are subject to movement by settlement or frost, direct-buried conductors, raceways, or cables shall be arranged so as to prevent damage to the enclosed conductors or to equipment connected to the raceways.

Informational Note: This section recognizes “S” loops in underground direct burial cables and conductors to raceway transitions, expansion fittings in raceway risers to fixed equipment, and, generally, the provision of flexible connections to equipment subject to settlement or frost heaves.

(~~I~~ 9) Directional Boring.

Cables or raceways installed using directional boring equipment shall be approved for the purpose.

(~~J~~ 10) Separation From Light or Power, Non-Power-Limited Fire Alarm, or Class 1 Circuits.

Direct-buried limited-energy and communication wires and cables shall be separated at least 300 mm (12 in.) from conductors of any light or power, non-power-limited fire alarm circuit conductors, or Class 1 circuit.

Exception Informational Note No. 1: Separation shall not be required if electric service conductors or all the direct-buried communications wires and cables, CATV-type coaxial cables, and network-powered broadband communications cables are installed in raceways or have metal cable armor.

Exception Informational Note No. 2: Separation shall not be required under one of the following conditions:

(1) If the electric light or power branch-circuit or feeder conductors or Class 1 circuit conductors are installed in a raceway or in metal-sheathed, metal-clad, or Type UF or Type USE cables

(2) If all the direct-buried communications wires cables, CATV-type coaxial cables, and network-powered broadband communications cables have metal cable armor or are installed in raceway

Statement of Problem and Substantiation for Public Comment

This public comment is submitted in response to the resolution of PI-1695 and related committee statement. The committee statement indicates that this new qualified person language would be better suited for Chapter 1 in the general requirements applying to all installations. As such the proposed qualified person language has been proposed for the general limited-energy installation requirements in new Article 720 as suggested by CMP 3 in the committee statement. Additionally the use of a specific section requiring qualified persons is well established in the NEC.

There are 126 occurrences where the NEC requires qualified persons:
54 - Occurrences requiring a Qualified Person to install, service or maintain an electrical installation.
9 - Occurrences requiring supervision by a Qualified Person.
36 – Occurrences restricting access to Qualified Persons.
27 – Occurrences providing a relaxed requirement or exception related to qualified persons.

With a specialty installation such as a limited-energy installations there is a unique potential for someone who may not be qualified in regard to electrical installation codes specific to the life safety and the safety of property. It is also important to stress that the possession of a jurisdictional license does not make someone qualified, but it is whether the person performing the installation possesses the knowledge, skills and abilities to perform the installation in a code compliant manner. Qualified does not mean licensed or restrict the installation to an electrician.

Related Item

• FCR-221 • PI-1708 • PI-1701 • PI-1698 • PI-1695 • PI-1690

Submitter Information Verification

Submitter Full Name: Jeff Noren
Organization: National Electrical Contractors Association
Street Address:
City:
State:
Zip:

Submittal Date: Tue Aug 27 19:25:41 EDT 2024
Committee: NEC-P03

Public Comment No. 305-NFPA 70-2024 [Section No. 720.5]

720.5 Underground Installations.

(A) Wet Locations.

The interior of enclosures or raceways installed underground shall be considered to be a wet location. Insulated conductors and cables installed in these enclosures or raceways in underground installations shall comply with ~~722~~ 310 .~~2~~ 10 (~~A~~ C)~~(11)~~ .

Exception: The requirements of 310.10(C) shall not apply to communications Type CM cables and conductors and coaxial-type CATV cables.

(B) Pools.

Limited-energy and communications cables located under the pool or within the area extending 1.5 m (5 ft) horizontally from the inside wall of the pool shall meet those requirements specified in 680.11.

(C) Underground Cables and Conductors Under Buildings.

Underground limited-energy and communications cable and conductors installed under a building shall be in a raceway.

(D) Protection from Damage when Emerging from Grade.

Direct-buried limited-energy and communications conductors and cables emerging from grade shall be protected by enclosures or raceways extending from the minimum cover distance below grade required by ~~720~~ Table 300 .5(A) to a point at least 2.5 m (8 ft) above finished grade. In no case shall the protection be required to exceed 450 mm (18 in.) below finished grade.

(E) Splices and Taps.

Direct-buried limited-energy and communications conductors or cables shall be permitted to be spliced or tapped without the use of splice boxes. The splices or taps shall be made in accordance with 110.14(B).

(F) Backfill.

Backfill that contains large rocks, paving materials, cinders, large or sharply angular substances, or corrosive material shall not be placed in an excavation where materials might damage raceways, cables, conductors, or other substructures or prevent adequate compaction of fill or contribute to corrosion of raceways, cables, or other substructures.

Where necessary to prevent physical damage to the raceway, cable, or conductor, protection shall be provided in the form of granular or selected material, suitable running boards, suitable sleeves, or other approved means.

(G) Bushing.

A bushing or terminal fitting with an integral bushed opening shall be used at the end of a conduit or other raceway that terminates underground where the conductors or cables emerge as a direct burial wiring method. A seal incorporating the physical protection characteristics of a bushing shall be permitted to be used in lieu of a bushing.

(H) Earth Movement.

Where direct-buried conductors, raceways, or cables are subject to movement by settlement or frost, direct-buried conductors, raceways, or cables shall be arranged so as to prevent damage to the enclosed conductors or to equipment connected to the raceways.

Informational Note: This section recognizes “S” loops in underground direct burial cables and conductors to raceway transitions, expansion fittings in raceway risers to fixed equipment, and, generally, the provision of flexible connections to equipment subject to settlement or frost heaves.

(I) Directional Boring.

Cables or raceways installed using directional boring equipment shall be approved for the purpose.

(J) Separation From Light or Power, Non-Power-Limited Fire Alarm, or Class 1 Circuits.

Direct-buried limited-energy and communication wires and cables shall be separated at least 300 mm (12 in.) from conductors of any light or power, non-power-limited fire alarm circuit conductors, or Class 1 circuit.

Exception Informational Note No. 1: Separation shall not be required if electric service conductors or all the direct-buried communications wires and cables, CATV-type coaxial cables, and network-powered broadband communications cables are installed in raceways or have metal cable armor.

Exception Informational Note No. 2: Separation shall not be required under one of the following conditions:

(1) If the electric light or power branch-circuit or feeder conductors or Class 1 circuit conductors are installed in a raceway or in metal-sheathed, metal-clad, or Type UF or Type USE cables

(2) If all the direct-buried communications wires cables, CATV-type coaxial cables, and network-powered broadband communications cables have metal cable armor or are installed in raceway

Statement of Problem and Substantiation for Public Comment

Correlation is required in this section. In 720.5(A), there is a pointer to 722.2(A)(11), however that section doesn't exist. I don't know if it was intended to be created, but I've proposed revising the pointer back to 310.10(C), consistent with the language in the exception to this section and how it's covered in 300.9. In section 720.5(D), there is a pointer to the minimum cover requirements in 720.5(A), however there are no minimum cover requirements in this section. I don't know if a "Table 720.5(A)" was inadvertently left out of the first draft or not, but I proposed reverting this to the minimum cover requirements in Table 300.5(A). As it is currently written, 300.1 applies to all installations under 1000V AC/1500V DC unless modified by the other articles in Chapter 3. As these low-voltage cable articles are not in Chapter 3, this is going to present a correlation problem. I'm suggesting we either point to the Article 300 requirements, or we take specific exception to them and make sure the scope of Article 300 is properly revised to allow Articles 720 through 726 to also modify the requirements in Article 300.

Related Item

• FCR-149 • CCN-410

Submitter Information Verification

Submitter Full Name: Richard Holub

Organization: The DuPont Company, Inc.

Street Address:

City:

State:

Zip:

Submittal Date:	Mon Jul 29 10:29:03 EDT 2024
Committee:	NEC-P03

Public Comment No. 882-NFPA 70-2024 [Section No. 720.5]

720.5 Underground Installations.

(A) Wet Locations.

The interior of enclosures or raceways installed underground shall be considered to be a wet location. Insulated conductors and cables installed in these enclosures or raceways in underground installations shall comply with 722.~~2~~ 100 (A)(11).

~~*Exception: The requirements of 310.10 (C) shall not apply to communications Type CM cables and conductors and coaxial-type CATV cables.*~~

~~(~~

B) *Pools.*

Limited-energy and communications cables located under the pool or within the area extending 1.5 m (5 ft) horizontally from the inside wall of the pool shall meet those requirements specified in 680.11.

(C) Underground Cables and Conductors Under Buildings.

Underground limited-energy and communications cable and conductors installed under a building shall be in a raceway.

(D) Protection from Damage when Emerging from Grade.

Direct-buried limited-energy and communications conductors and cables emerging from grade shall be protected by enclosures or raceways extending from ~~the minimum cover distance below~~ grade ~~required by~~ ~~720.5(A)~~ - to a point at least 2.5 m (8 ft) above finished grade.~~ In no case shall the protection be required to exceed 450 mm (18 in.) below finished grade.~~

(E) Splices and Taps.

Direct-buried limited-energy and communications conductors or cables shall be permitted to be spliced or tapped without the use of splice boxes. The splices or taps shall be made in accordance with 110.14(B).

(F) Backfill.

Backfill that contains large rocks, paving materials, cinders, large or sharply angular substances, or corrosive material shall not be placed in an excavation where materials might damage raceways, cables, conductors, or other substructures or prevent adequate compaction of fill or contribute to corrosion of raceways, cables, or other substructures.

Where necessary to prevent physical damage to the raceway, cable, or conductor, protection shall be provided in the form of granular or selected material, suitable running boards, suitable sleeves, or other approved means.

(G) Bushing.

A bushing or terminal fitting with an integral bushed opening shall be used at the end of a conduit or other raceway that terminates underground where the conductors or cables emerge as a direct burial wiring method. A seal incorporating the physical protection characteristics of a bushing shall be permitted to be used in lieu of a bushing.

(H) Earth Movement.

Where direct-buried conductors, raceways, or cables are subject to movement by settlement or frost, direct-buried conductors, raceways, or cables shall be arranged so as to prevent damage to the enclosed conductors or to equipment connected to the raceways.

Informational Note: This section recognizes “S” loops in underground direct burial cables and conductors to raceway transitions, expansion fittings in raceway risers to fixed equipment, and, generally, the provision of flexible connections to equipment subject to settlement or frost heaves.

(I) Directional Boring.

Cables or raceways installed using directional boring equipment shall be approved for the purpose.

(J) Separation From Light or Power, Non-Power-Limited Fire Alarm, or Class 1 Circuits.

Direct-buried limited-energy and communication wires and cables shall be separated at least 300 mm (12 in.) from conductors of any light or power, non-power-limited fire alarm circuit conductors, or Class 1 circuit.

Exception Informational Note No. 1: Separation shall not be required if electric service conductors or all the direct-buried communications wires and cables, CATV-type coaxial cables, and network-powered broadband communications cables are installed in raceways or have metal cable armor.

Exception Informational Note No. 2: Separation shall not be required under one of the following conditions:

(1) If the electric light or power branch-circuit or feeder conductors or Class 1 circuit conductors are installed in a raceway or in metal-sheathed, metal-clad, or Type UF or Type USE cables

(2) If all the direct-buried communications wires cables, CATV-type coaxial cables, and network-powered broadband communications cables have metal cable armor or are installed in raceway

Statement of Problem and Substantiation for Public Comment

720.5(A) points to the wrong section. Its exception is marked for deletion because 310.10(C) does not apply to these cables. You are writing an exception to a rule that does not apply to begin with.
720.5(D) refers to rule that doesn’t exist (cover, aka “burial depth”).

Related Item

• FCR 221

Submitter Information Verification

Submitter Full Name: Ryan Jackson
Organization: Self-employed
Street Address:
City:
State:
Zip:
Submittal Date: Wed Aug 07 11:57:16 EDT 2024
Committee: NEC-P03

Public Comment No. 1502-NFPA 70-2024 [Section No. 720.5(A)]

(A) Wet Locations.

The interior of enclosures or raceways installed underground shall be considered to be a wet location. Insulated conductors and cables installed in these enclosures or raceways in underground installations shall comply with 722.2(~~A~~ B)~~(11)~~ .

Exception: The requirements of ~~310~~ 722 . ~~10~~ 2 (~~C~~ B) - ~~shall~~ shall not apply to ~~communications Type CM cables and conductors and coaxial-type CATV cables.~~ the following limited-energy cable types:

(1) Optical fiber cables

(2) Communications cables

(3) Coaxial-Type CATV cables

Additional Proposed Changes

File Name	Description	Approved
Limited_Energy_Roster-2026_2nd_Draft.pdf	Limited-Energy Task Group Roster-2nd Draft	

Statement of Problem and Substantiation for Public Comment

This Public Comment is submitted on behalf of the Limited-Energy Task Group (see attached roster) to correct the reference in the section 720.5(A) to correctly refer to the listing requirements for limited-energy cables in new section 722.2 created by a companion Public Comment 924. This PC also revises the exception to include the newly defined term for limited-energy cables created by PC-1371 and utilize a list format for clarity and usability.

Related Public Comments for This Document

Related Comment	Relationship
Public Comment No. 1371-NFPA 70-2024 [New Definition after Definition: Cable Joint.]	PC creating definition of limited-energy cables

Related Item

- FCR-237

Submitter Information Verification

Submitter Full Name: Kyle Krueger
Organization: NECA
Affiliation: NECA
Street Address:
City:
State:
Zip:

Submittal Date: Fri Aug 23 15:54:23 EDT 2024
Committee: NEC-P03

Limited Energy Task Group [2nd Draft]					
No.	First Name	Last Name	Class.	Organization	Other Committees
1	Kyle	Krueger	[I/M]	NECA	NEC-Correlating Comittee CMP 3 NFPA 72-Correlating Committee
2	Ernie	Gallo	[U/T]	NEBScore	
3	Derrick	Atkins	[L]	Minneapolis Electrical JA	NEC-Correlating Committee CMP 5
4	Anthony	Tassone	[R/T]	UL Solutions	CMP 3 CMP 16
5	Chad	Jones	[M]	Cisco	CMP 3
6	Sam	Rokowski	[I/M]	Maddox Inc.	CMP 3
7	George	Bish	[M]	Amazon/Ring Protect Inc	CMP 16
8	Trevor	Bowmer	[U]	Telecom Consulting	NEC Correlating Committee CMP 16
9	Ronald	Tellas	[M]	CCCA	CMP 3 CMP 16
10	Tim	Mikloiche	[E]	IAEI	CMP 3
11	Ryan	Jackosn	[M]	Steel Tube Industry	CMP 3
12	Diana	Lettkeman	[M]	Dish	CMP 16
13	John	Kacperski	[L]	IBEW	CMP 16

Public Comment No. 335-NFPA 70-2024 [Section No. 720.5(A)]

(A) Wet Locations.

The interior of enclosures or raceways installed underground shall be considered to be a wet location. ~~Insulated conductors and cables~~ Cables installed in these enclosures or raceways in underground installations shall ~~comply~~ be listed for use in wet locations in accordance with 722.2(A)(~~11~~ 12).

Exception: The requirements of ~~310~~ 722 . ~~10~~ 2 (~~C~~ A) (12) shall not apply to optical fiber cables, communications ~~Type CM~~ cables and ~~conductors and~~ coaxial-type CATV cables.

Statement of Problem and Substantiation for Public Comment

"Insulated conductors and cables" was changed to "cables". "Type CM" was deleted because the exception applies to all communications cables, (CMP, CMR, CM etc.) not just Type CM. Optical fiber cables were omitted from the First Revision. this PC corrects that oversight.

The recommended text was modified to clarify that the requirement is for a wet listing.The reference to the wet listing requirement was changed to 722.2(A)(12) to correlate with the recommended text in PC.

The reference to the wet listing requirement in the exception was changed from 310.10(C) to 722.2(A)(12) because 310.10( ) deals with power conductors, not limited-energy cables.

Related Public Comments for This Document

Related Comment	Relationship
Public Comment No. 1619-NFPA 70-2024 [Article 720]	

Related Item

- Global FCR-221

Submitter Information Verification

Submitter Full Name: David Kiddoo
Organization: CCCA
Affiliation: Communications Cable & Connectivity Association
Street Address:
City:
State:
Zip:

Submittal Date: Tue Jul 30 06:19:52 EDT 2024
Committee: NEC-P03

Public Comment No. 1506-NFPA 70-2024 [Section No. 720.5(B)]

(B) Pools.

Limited-~~energy and communications cables~~ energy cables located under the pool or within the area extending 1.5 m (5 ft) horizontally from the inside wall of the pool shall meet those requirements specified in 680.11.

Additional Proposed Changes

File Name	Description	Approved
Limited_Energy_Roster-2026_2nd_Draft.pdf	Limited-Energy Task Group Roster-2nd Draft	

Statement of Problem and Substantiation for Public Comment

This public comment is submitted on behalf of the Limited-Energy Task Group (see attached roster) to delete redundant language in section 720.5(B) as the new definition of limited-energy cables proposed by companion PC-1371 includes communications cables. Upon the approval of this new definition there is no need for this redundant text.

Related Public Comments for This Document

Related Comment	Relationship
Public Comment No. 1371-NFPA 70-2024 [New Definition after Definition: Cable Joint.]	PC to create definition of limited-energy cables

Related Item

- FCR-221

Submitter Information Verification

Submitter Full Name: Kyle Krueger
Organization: NECA
Affiliation: NECA
Street Address:
City:
State:
Zip:

Submittal Date: Fri Aug 23 16:11:03 EDT 2024
Committee: NEC-P03

Limited Energy Task Group [2nd Draft]					
No.	First Name	Last Name	Class.	Organization	Other Committees
1	Kyle	Krueger	[I/M]	NECA	NEC-Correlating Comittee CMP 3 NFPA 72-Correlating Committee
2	Ernie	Gallo	[U/T]	NEBScore	
3	Derrick	Atkins	[L]	Minneapolis Electrical JA	NEC-Correlating Committee CMP 5
4	Anthony	Tassone	[R/T]	UL Solutions	CMP 3 CMP 16
5	Chad	Jones	[M]	Cisco	CMP 3
6	Sam	Rokowski	[I/M]	Maddox Inc.	CMP 3
7	George	Bish	[M]	Amazon/Ring Protect Inc	CMP 16
8	Trevor	Bowmer	[U]	Telecom Consulting	NEC Correlating Committee CMP 16
9	Ronald	Tellas	[M]	CCCA	CMP 3 CMP 16
10	Tim	Mikloiche	[E]	IAEI	CMP 3
11	Ryan	Jackosn	[M]	Steel Tube Industry	CMP 3
12	Diana	Lettkeman	[M]	Dish	CMP 16
13	John	Kacperski	[L]	IBEW	CMP 16

Public Comment No. 336-NFPA 70-2024 [Section No. 720.5(B)]

(B) Pools.

~~Limited~~ Listed limited -energy ~~and communications~~ cables located under the pool or within the area extending 1.5 m (5 ft) horizontally from the inside wall of the pool shall meet those requirements specified in 680.11.

Statement of Problem and Substantiation for Public Comment

Communications cables are limited-energy cables. It is redundant to refer to “limited energy and communications cables”; “limited-energy cables is sufficient.

Also, the recommended text clarifies that the cables covered by this section are listed. Typically, outside plant communications and optical fiber cables are not listed and their installation in covered by the National Electrical Safety Code.

Related Public Comments for This Document

Related Comment	Relationship
Public Comment No. 341-NFPA 70-2024 [Section No. 720.6(A)]	Communications cables are limited-energy cables.
Public Comment No. 342-NFPA 70-2024 [Section No. 720.6(B) [Excluding any Sub-Sections]]	Communications cables are limited-energy cables.
Public Comment No. 344-NFPA 70-2024 [Section No. 720.6(H)]	Communications cables are limited-energy cables.
Public Comment No. 345-NFPA 70-2024 [Section No. 720.6(J)]	Communications cables are limited-energy cables.
Public Comment No. 346-NFPA 70-2024 [Section No. 720.6(K)]	Communications cables are limited-energy cables.
Public Comment No. 347-NFPA 70-2024 [Section No. 720.7 [Excluding any Sub-Sections]]	Communications cables are limited-energy cables.
Public Comment No. 348-NFPA 70-2024 [Section No. 720.10]	Communications cables are limited-energy cables.
Public Comment No. 350-NFPA 70-2024 [Section No. 720.14(B)]	Communications cables are limited-energy cables.
Public Comment No. 352-NFPA 70-2024 [Section No. 720.19(B)]	Communications cables are limited-energy cables.
Public Comment No. 353-NFPA 70-2024 [Section No. 720.21]	Communications cables are limited-energy cables.
Public Comment No. 355-NFPA 70-2024 [Section No. 720.22(A)]	Communications cables are limited-energy cables.
Public Comment No. 356-NFPA 70-2024 [Section No. 720.22(B)]	Communications cables are limited-energy cables.
Public Comment No. 357-NFPA 70-2024 [Section No. 720.22(C)(1)]	Communications cables are limited-energy cables.
Public Comment No. 359-NFPA 70-2024 [Section No. 720.30(A)(2)]	Communications cables are limited-energy cables.
Public Comment No. 127-NFPA 70-2024 [New Section after 722.1]	722.2 Listing of Limited-Energy Cables
Public Comment No. 1619-NFPA 70-2024 [Article 720]	

Related Item

- Global FCR-221

Submitter Information Verification

Submitter Full Name: David Kiddoo
Organization: CCCA
Affiliation: Communications Cable & Connectivity Association
Street Address:
City:
State:
Zip:

Submittal Date: Tue Jul 30 06:34:59 EDT 2024
Committee: NEC-P03

Public Comment No. 1507-NFPA 70-2024 [Section No. 720.5(C)]

(C) Underground Limited-Energy Cables ~~and Conductors~~ Under Buildings.

Underground limited-energy ~~and communications cable and conductors~~ cables installed under a building shall be in a raceway.

Exception: The following unlisted outside plant limited-energy cable types shall be permitted to be installed without a raceway:

(1) Optical fiber cable

(2) Communications cable

(3) Coaxial Type-CATV cable

Additional Proposed Changes

File Name	Description	Approved
Limited_Energy_Roster-2026_2nd_Draft.pdf	Limited-Energy Task Group Roster-2nd Draft	

Statement of Problem and Substantiation for Public Comment

This public comment is submitted on behalf of the Limited-Energy Task Group (see attached roster) to delete redundant language in section 720.5(C) as the new definition of limited-energy cables proposed by companion PC-1371 includes communications cables. Upon the approval PC-1371 there will be no need for this redundant text. Additionally, this PC proposes to create an exception for Optical Fiber, Communications, and CATV cables as this rule was not applicable to those cable types prior to the removal of Chapter 8's independence in the first draft.

Related Public Comments for This Document

Related Comment	Relationship
Public Comment No. 1371-NFPA 70-2024 [New Definition after Definition: Cable Joint.]	PC creating the definition of limited-energy cables.

Related Item

- FCR-221

Submitter Information Verification

Submitter Full Name: Kyle Krueger
Organization: NECA
Affiliation: NECA
Street Address:
City:
State:
Zip:

Submittal Date: Fri Aug 23 16:12:58 EDT 2024
Committee: NEC-P03

Limited Energy Task Group [2nd Draft]					
No.	First Name	Last Name	Class.	Organization	Other Committees
1	Kyle	Krueger	[I/M]	NECA	NEC-Correlating Comittee CMP 3 NFPA 72-Correlating Committee
2	Ernie	Gallo	[U/T]	NEBScore	
3	Derrick	Atkins	[L]	Minneapolis Electrical JA	NEC-Correlating Committee CMP 5
4	Anthony	Tassone	[R/T]	UL Solutions	CMP 3 CMP 16
5	Chad	Jones	[M]	Cisco	CMP 3
6	Sam	Rokowski	[I/M]	Maddox Inc.	CMP 3
7	George	Bish	[M]	Amazon/Ring Protect Inc	CMP 16
8	Trevor	Bowmer	[U]	Telecom Consulting	NEC Correlating Committee CMP 16
9	Ronald	Tellas	[M]	CCCA	CMP 3 CMP 16
10	Tim	Mikloiche	[E]	IAEI	CMP 3
11	Ryan	Jackosn	[M]	Steel Tube Industry	CMP 3
12	Diana	Lettkeman	[M]	Dish	CMP 16
13	John	Kacperski	[L]	IBEW	CMP 16

Public Comment No. 337-NFPA 70-2024 [Section No. 720.5(C)]

(C) Underground Cables and Conductors Under Buildings.

Underground limited-energy ~~and communications cable and conductors~~ cables installed under a building shall be in a raceway.

Exception: Unlisted outside plant communications cables, CATV-type coaxial cables and optical fiber cables shall be permitted to be installed without raceway.

Statement of Problem and Substantiation for Public Comment

Typically, outside plant communications cables, CATV-type coaxial cables and optical fiber cables are not listed and their installation in covered by the National Electrical Safety Code. These cables are designed for direct burial use in addition to in conduit and aerially.

Related Public Comments for This Document

Related Comment	Relationship
Public Comment No. 338-NFPA 70-2024 [Section No. 720.5(D)]	Adds exception for outside plant cables.
Public Comment No. 339-NFPA 70-2024 [Section No. 720.5(E)]	Adds exception for outside plant cables.
Public Comment No. 338-NFPA 70-2024 [Section No. 720.5(D)]	
Public Comment No. 339-NFPA 70-2024 [Section No. 720.5(E)]	
Public Comment No. 1619-NFPA 70-2024 [Article 720]	

Related Item

- Global FCR-221

Submitter Information Verification

Submitter Full Name: David Kiddoo
Organization: CCCA
Affiliation: Communications Cable & Connectivity Association
Street Address:
City:
State:
Zip:

Submittal Date: Tue Jul 30 06:46:49 EDT 2024
Committee: NEC-P03

Public Comment No. 1508-NFPA 70-2024 [Section No. 720.5(D)]

(D) Protection from Damage when Emerging from Grade.

Direct-buried limited-energy ~~and communications conductors and~~ cables emerging from grade shall be protected by enclosures or raceways extending from the minimum cover distance below grade required by 720.5(A) to a point at least 2.5 m (8 ft) above finished grade. In no case shall the protection be required to exceed 450 mm (18 in.) below finished grade.

Exception: The following unlisted outside plant limited-energy cable types shall be permitted to be installed with protection:

(1) Optical fiber cable

(2) Communications cable

(3) Coaxial Type-CATV cable

Additional Proposed Changes

File Name	Description	Approved
Limited_Energy_Roster-2026_2nd_Draft.pdf	Limited-Energy Task Group Roster-2nd Draft	

Statement of Problem and Substantiation for Public Comment

This public comment is submitted on behalf of the Limited-Energy Task Group (see attached roster) to delete redundant language in section 720.5(D) as the new definition of limited-energy cables proposed by companion PC-1371 includes communications cables. Upon the approval PC-1371 there will be no need for this redundant text. Additionally, this PC proposes to create an exception for Optical Fiber, Communications, and CATV cables as this rule was not applicable to those cable types prior to the removal of Chapter 8's independence in the first draft.

Related Public Comments for This Document

Related Comment	Relationship
Public Comment No. 1371-NFPA 70-2024 [New Definition after Definition: Cable Joint.]	PC creating new defintion for limited-energy cables.

Related Item

- FCR-221

Submitter Information Verification

Submitter Full Name: Kyle Krueger
Organization: NECA
Affiliation: NECA
Street Address:
City:
State:
Zip:

Submittal Date: Fri Aug 23 16:16:10 EDT 2024
Committee: NEC-P03

Limited Energy Task Group [2nd Draft]					
No.	First Name	Last Name	Class.	Organization	Other Committees
1	Kyle	Krueger	[I/M]	NECA	NEC-Correlating Comittee CMP 3 NFPA 72-Correlating Committee
2	Ernie	Gallo	[U/T]	NEBScore	
3	Derrick	Atkins	[L]	Minneapolis Electrical JA	NEC-Correlating Committee CMP 5
4	Anthony	Tassone	[R/T]	UL Solutions	CMP 3 CMP 16
5	Chad	Jones	[M]	Cisco	CMP 3
6	Sam	Rokowski	[I/M]	Maddox Inc.	CMP 3
7	George	Bish	[M]	Amazon/Ring Protect Inc	CMP 16
8	Trevor	Bowmer	[U]	Telecom Consulting	NEC Correlating Committee CMP 16
9	Ronald	Tellas	[M]	CCCA	CMP 3 CMP 16
10	Tim	Mikloiche	[E]	IAEI	CMP 3
11	Ryan	Jackosn	[M]	Steel Tube Industry	CMP 3
12	Diana	Lettkeman	[M]	Dish	CMP 16
13	John	Kacperski	[L]	IBEW	CMP 16

Public Comment No. 338-NFPA 70-2024 [Section No. 720.5(D)]

(D) Protection from Damage when Emerging from Grade.

Direct-buried limited-energy ~~and communications conductors and~~ cables emerging from grade shall be protected by enclosures or raceways extending from the minimum cover distance below grade required by 720.5(A) to a point at least 2.5 m (8 ft) above finished grade. In no case shall the protection be required to exceed 450 mm (18 in.) below finished grade.

Exception: Unlisted outside plant communications cables, CATV-type coaxial cables and optical fiber cables shall be permitted to be installed without protection.

Statement of Problem and Substantiation for Public Comment

Typically, outside plant communications cables, CATV-type coaxial cables and optical fiber cables are not listed and their installation in covered by the National Electrical Safety Code. These cables are designed for direct burial use in addition to in conduit and aerially.

Communications cables are limited-energy cables. It is redundant to refer to “limited-energy and communications cables”; “limited-energy cables is sufficient.

Related Public Comments for This Document

Related Comment	Relationship
Public Comment No. 337-NFPA 70-2024 [Section No. 720.5(C)]	Adds exception for outside plant cables.
Public Comment No. 339-NFPA 70-2024 [Section No. 720.5(E)]	Adds exception for outside plant cables.
Public Comment No. 127-NFPA 70-2024 [New Section after 722.1]	722.2 Listing of Limited-Energy Cables
Public Comment No. 337-NFPA 70-2024 [Section No. 720.5(C)]	
Public Comment No. 339-NFPA 70-2024 [Section No. 720.5(E)]	
Public Comment No. 1619-NFPA 70-2024 [Article 720]	

Related Item

- Global FCR-221

Submitter Information Verification

Submitter Full Name: David Kiddoo
Organization: CCCA
Affiliation: Communications Cable & Connectivity Association
Street Address:
City:
State:
Zip:

Submittal Date: Tue Jul 30 06:55:00 EDT 2024
Committee: NEC-P03

Public Comment No. 1509-NFPA 70-2024 [Section No. 720.5(E)]

~~(E) Splices and Taps.~~

~~Direct-buried limited-energy and communications conductors or cables shall be permitted to be spliced or tapped without the use of splice boxes. The splices or taps shall be made in accordance with 110.14(B) .~~

Additional Proposed Changes

File Name	Description	Approved
Limited_Energy_Roster-2026_2nd_Draft.pdf	Limited-Energy Task Group Roster-2nd Draft	

Statement of Problem and Substantiation for Public Comment

This public comment is submitted on behalf of the Limited-Energy Task Group (see attached roster) to delete section 720.5(E) as there is nothing in the NEC that would prohibit the splice of a LE Cable underground without a box and section 110.14(B) would still apply requiring the splice method to be identified for the means.

Related Item

- FCR-221

Submitter Information Verification

Submitter Full Name: Kyle Krueger
Organization: NECA
Affiliation: NECA
Street Address:
City:
State:
Zip:

Submittal Date: Fri Aug 23 16:19:14 EDT 2024
Committee: NEC-P03

Limited Energy Task Group [2nd Draft]					
No.	First Name	Last Name	Class.	Organization	Other Committees
1	Kyle	Krueger	[I/M]	NECA	NEC-Correlating Comittee CMP 3 NFPA 72-Correlating Committee
2	Ernie	Gallo	[U/T]	NEBScore	
3	Derrick	Atkins	[L]	Minneapolis Electrical JA	NEC-Correlating Committee CMP 5
4	Anthony	Tassone	[R/T]	UL Solutions	CMP 3 CMP 16
5	Chad	Jones	[M]	Cisco	CMP 3
6	Sam	Rokowski	[I/M]	Maddox Inc.	CMP 3
7	George	Bish	[M]	Amazon/Ring Protect Inc	CMP 16
8	Trevor	Bowmer	[U]	Telecom Consulting	NEC Correlating Committee CMP 16
9	Ronald	Tellas	[M]	CCCA	CMP 3 CMP 16
10	Tim	Mikloiche	[E]	IAEI	CMP 3
11	Ryan	Jackosn	[M]	Steel Tube Industry	CMP 3
12	Diana	Lettkeman	[M]	Dish	CMP 16
13	John	Kacperski	[L]	IBEW	CMP 16

Public Comment No. 339-NFPA 70-2024 [Section No. 720.5(E)]

(E) Splices and Taps.

Direct-buried limited-energy ~~and communications conductors or~~ cables shall be permitted to be spliced or tapped without the use of splice boxes. The splices or taps shall be made in accordance with 110.14(B).

Exception: Splices ot taps of unlisted outside plant communications cables, CATV-type coaxial cables and optical fiber cables shall not be required to be in accordance with 110.14(B).

Statement of Problem and Substantiation for Public Comment

Typically, outside plant communications cables, CATV-type coaxial cables and optical fiber cables are not listed and their installation in covered by the National Electrical Safety Code.

Communications cables are limited-energy cables. It is redundant to refer to “limited-energy and communications cables”; “limited-energy cables" is sufficient.

Related Public Comments for This Document

Related Comment	Relationship
Public Comment No. 337-NFPA 70-2024 [Section No. 720.5(C)]	Adds exception for outside plant cables.
Public Comment No. 338-NFPA 70-2024 [Section No. 720.5(D)]	Adds exception for outside plant cables.
Public Comment No. 127-NFPA 70-2024 [New Section after 722.1]	722.2 Listing of Limited-Energy Cables
Public Comment No. 337-NFPA 70-2024 [Section No. 720.5(C)]	
Public Comment No. 338-NFPA 70-2024 [Section No. 720.5(D)]	
Public Comment No. 1619-NFPA 70-2024 [Article 720]	

Related Item

- Global FCR-221

Submitter Information Verification

Submitter Full Name: David Kiddoo
Organization: CCCA
Affiliation: Communications Cable & Connectivity Association
Street Address:
City:
State:
Zip:

Submittal Date: Tue Jul 30 08:37:58 EDT 2024
Committee: NEC-P03

Public Comment No. 1510-NFPA 70-2024 [Section No. 720.5(J)]

~~**(J)** Separation From Light or Power, Non-Power-Limited Fire Alarm, or Class 1 Circuits.~~

~~Direct-buried limited-energy and communication wires and cables shall be separated at least 300 mm (12 in.) from conductors of any light or power, non-power-limited fire alarm circuit conductors, or Class 1 circuit.~~

~~*Exception Informational Note No. 1:* Separation shall not be required if electric service conductors or all the direct-buried communications wires and cables, CATV-type coaxial cables, and network-powered broadband communications cables are installed in raceways or have metal cable armor.~~

~~*Exception Informational Note No. 2:* Separation shall not be required under one of the following conditions:~~

~~(1) If the electric light or power branch-circuit or feeder conductors or Class 1 circuit conductors are installed in a raceway or in metal-sheathed, metal-clad, or Type UF or Type USE cables~~

~~(2) If all the direct-buried communications wires cables, CATV-type coaxial cables, and network-powered broadband communications cables have metal cable armor or are installed in raceway~~

Additional Proposed Changes

File Name	Description	Approved
Limited_Energy_Roster-2026_2nd_Draft.pdf	Limited-Energy Task Group Roster-2nd Draft	

Statement of Problem and Substantiation for Public Comment

This public comment is submitted on behalf of the Limited-Energy Task Group (see attached roster) to delete section 720.5(J) as it is not necessary as this text still applies to communications cables installed for outside plant and up to the building by section 800.47(A).

Related Item

- FCR-221

Submitter Information Verification

Submitter Full Name: Kyle Krueger
Organization: NECA
Affiliation: NECA
Street Address:
City:
State:
Zip:

Submittal Date: Fri Aug 23 16:21:33 EDT 2024
Committee: NEC-P03

Limited Energy Task Group [2nd Draft]					
No.	First Name	Last Name	Class.	Organization	Other Committees
1	Kyle	Krueger	[I/M]	NECA	NEC-Correlating Comittee CMP 3 NFPA 72-Correlating Committee
2	Ernie	Gallo	[U/T]	NEBScore	
3	Derrick	Atkins	[L]	Minneapolis Electrical JA	NEC-Correlating Committee CMP 5
4	Anthony	Tassone	[R/T]	UL Solutions	CMP 3 CMP 16
5	Chad	Jones	[M]	Cisco	CMP 3
6	Sam	Rokowski	[I/M]	Maddox Inc.	CMP 3
7	George	Bish	[M]	Amazon/Ring Protect Inc	CMP 16
8	Trevor	Bowmer	[U]	Telecom Consulting	NEC Correlating Committee CMP 16
9	Ronald	Tellas	[M]	CCCA	CMP 3 CMP 16
10	Tim	Mikloiche	[E]	IAEI	CMP 3
11	Ryan	Jackosn	[M]	Steel Tube Industry	CMP 3
12	Diana	Lettkeman	[M]	Dish	CMP 16
13	John	Kacperski	[L]	IBEW	CMP 16

Public Comment No. 340-NFPA 70-2024 [Section No. 720.5(J)]

(J) Separation of Limited-Energy Cables From Light or Power, Non-Power-Limited Fire Alarm, Network-Powered Broadband Communications Medium-Power Circuits, or Class 1 Circuits.

~~Direct~~ Listed direct -buried limited-energy ~~and communication wires and~~ cables shall be separated at least 300 mm (12 in.) from conductors of any light or power, non-power-limited fire alarm circuit conductors, network-powered broadband medium-power circuits, or Class 1 circuit.

~~Exception Informational Note~~ Exception No. 1: Separation shall not be required if electric service conductors or all the direct-buried ~~communications wires and cables, CATV-type coaxial cables, and network-powered broadband communications cables~~ limited-energy cables are installed in raceways or have metal cable armor.

~~Exception Informational Note~~ Exception No. 2: Separation shall not be required under one of the following conditions:

(1) If the electric light or power branch-circuit or feeder conductors, non-power-limited fire alarm, network-powered broadband communications medium-power, or Class 1 circuit conductors are installed in a raceway or in metal-sheathed, metal-clad, or Type UF or Type USE cables

(2) If all the direct-buried ~~communications wires cables, CATV-type coaxial cables, and network-powered broadband communications cables~~ limited-energy cables have metal cable armor or are installed in raceway

Exception No. 3: Nonconductive optical fiber cables shall not be required to be separated.

Statement of Problem and Substantiation for Public Comment

The recommended text clarifies that the separation is between listed limited-energy cables and higher energy (power cables).

Network-powered broadband communications medium-power cables were omitted from the First Draft. This PC corrects that oversight.

An exception is added for nonconductive optical fiber cables which obviously can't become energized.

Related Public Comments for This Document

Related Comment	Relationship
Public Comment No. 127-NFPA 70-2024 [New Section after 722.1]	722.2 Listing of Limited-Energy Cables
Public Comment No. 1619-NFPA 70-2024 [Article 720]	

Related Item

- Global FCR-221

Submitter Information Verification

Submitter Full Name: David Kiddoo
Organization: CCCA
Affiliation: Communications Cable & Connectivity Association
Street Address:
City:
State:
Zip:

Submittal Date: Tue Jul 30 08:48:13 EDT 2024
Committee: NEC-P03

Public Comment No. 1512-NFPA 70-2024 [Section No. 720.6]

720.6 Protection Against Physical Damage.

(A) General.

Where subject to physical damage, conductors, raceways, and limited ~~energy and communications cables~~ energy cables shall be protected.

Informational Note No. 1: See ANSI/TIA-568.0-D-2015, *Generic Telecommunications Cabling for Customer Premises*, and ANSI/TIA 568.3-D-2016, *Optical Fiber Cabling and Components Standard*, for accepted industry practices.

Informational Note No. 2: See ANSI/BICSI N1-2019, *Installation Practices for Telecommunications and IC Cabling and Related Cabling Infrastructure*; ANSI/TIA-568.1- E-2020, *Commercial Building Telecommunications Infrastructure Standard*; ANSI/TIA-569-E-2019, *Telecommunications Pathways and Spaces*; ANSI/TIA-570-C-2012, *Residential Telecommunications Infrastructure Standard*; ANSI/TIA-1005-A-2012, *Telecommunications Infrastructure Standard for Industrial Premises*; ANSI/ TIA-1179-A-2017, *Healthcare Facility Telecommunications Infrastructure Standard*; ANSI/TIA-4966-2014, *Telecommunications Infrastructure Standard for Educational Facilities*; and other ANSI-approved installation standards for accepted industry practices.

(B) Cables or Conductors Installed in Raceways.

Wires and cables used for limited-energy ~~and communications~~ systems shall be permitted to be installed in any raceway included in Chapter 3.

(1) Number and Size of Cables or Conductors in a Raceway.

The number and size of limited-energy ~~and communications conductors and~~ cables installed in any raceway shall be determined in accordance with all of the following:

(1) Not more cables or conductors as permitted in Chapter 9

(2) To allow for the dissipation of heat

(3) To permit ready installation or withdrawal of the conductors or cables without damage to the conductors or cables, or to their insulation and sheathing

(C) Cables and Raceways Through Wood Members.

(1) Bored Holes.

In both exposed and concealed locations, where a cable- or raceway-type wiring method is installed through bored holes in joists, rafters, or wood members, holes shall be bored so that the edge of the hole is not less than 32 mm (1¼ in.) from the edges of the wood member. Where this distance cannot be maintained, the cable or raceway shall be protected from penetration by screws or nails by a steel plate(s) or bushing(s) at least 1.6 mm (1⁄16 in.) thick, and of appropriate length and width, installed to cover the area of the wiring.

Exception No. 1: Steel plates shall not be required to protect rigid metal conduit, intermediate metal conduit, rigid PVC conduit, RTRC, or electrical metallic tubing.

Exception No. 2: A listed and marked steel plate less than 1.6 mm (1⁄16 in.) thick that provides equal or better protection against nail or screw penetration shall be permitted.

(2) Notches in Wood.

Where there is no objection because of weakening the building structure, in both exposed and concealed locations, cables or raceways shall be permitted to be laid in notches in wood studs, joists, rafters, or other wood members where the cable or raceway at those points is protected from penetration by nails or screws by a steel plate at least 1.6 mm (1⁄16 in.) thick, and of appropriate length and width, installed to cover the area of the wiring. The steel plate shall be installed before the building finish is applied.

Exception No. 1: Steel plates shall not be required to protect rigid metal conduit, intermediate metal conduit, rigid nonmetallic conduit, or electrical metallic tubing.

Exception No. 2: A listed and marked steel plate less than 1.6 mm (1⁄16 in.) thick that provides equal or better protection against nail or screw penetration shall be permitted.

(D) Limited-Energy Cables without Metallic Cable Armor Through Metal Framing Members.

(1) Limited-Energy Cables without Metallic Armor.

In both exposed and concealed locations where limited-energy cables without metallic armor pass through either factory- or field-punched, cut, or drilled slots or holes in metal members, the cable shall be protected by listed bushings or listed grommets covering all metal edges that are securely fastened in the opening prior to installation of the cable.

(2) Limited-Energy Cables Installed in HDPE or ENT.

Where nails or screws are likely to penetrate limited-energy cables without a metallic cable armor, where installed in HDPE, ENT, or similar flexible nonmetallic raceways, a protection method as specified in 720.6 shall be used to protect the cable and tubing.

Exception: A listed and marked steel plate less than 1.6 mm (1⁄16 in.) thick that provides equal or better protection against nail or screw penetration shall be permitted.

(E) Cables and Raceways Parallel to Framing Members and Furring Strips.

In both exposed and concealed locations, where a cable- or raceway-type wiring method is installed parallel to framing members, such as joists, rafters, or studs, or is installed parallel to furring strips, the cable or raceway shall be installed and supported so that the nearest outside surface of the cable or raceway is not less than 32 mm (1 ¼ in.) from the nearest edge of the framing member or furring strips where nails or screws are likely to penetrate. Where this distance cannot be maintained, the cable or raceway shall be protected from penetration by nails or screws by a steel plate, sleeve, or equivalent at least 1.6 mm (1⁄16 in.) thick.

Exception No. 1: Steel plates, sleeves, or the equivalent shall not be required to protect rigid metal conduit, intermediate metal conduit, rigid nonmetallic conduit, or electrical metallic tubing.

Exception No. 2: For concealed work in finished buildings or finished panels for prefabricated buildings where such supporting is impracticable, it shall be permissible to fish the cables between access points.

Exception No. 3: A listed and marked steel plate less than 1.6 mm (1⁄16 in.) thick that provides equal or better protection against nail or screw penetration shall be permitted.

(F) Cables, Raceways, or Boxes Installed in or Under Metal-Corrugated Roof Decking.

A cable, raceway, or box, installed in exposed or concealed locations under metal-corrugated sheet roof decking, shall be installed and supported so there is not less than 38 mm (1 ½ in.) measured from the lowest surface of the roof decking to the top of the cable, raceway, or box. A cable, raceway, or box shall not be installed in concealed locations in metal-corrugated, sheet decking–type roof.

Note: Roof decking material is often repaired or replaced after the initial raceway or cabling and roofing installation and might be penetrated by screws or other mechanical devices designed to provide "hold down" strength of the waterproof membrane or roof insulating material.

Exception No. 1: Rigid metal conduit and intermediate metal conduit, with listed steel or malleable iron fittings and boxes, shall not be required to comply with 720.6(G).

Exception No. 2: The 38 mm (1 ½ in.) spacing is not required where metal-corrugated sheet roof decking is covered with a minimum thickness 50 mm (2 in.) concrete slab, measured from the top of the corrugated roofing.

(G) Cables and Raceways Installed in Shallow Grooves.

Cable- or raceway-type wiring methods installed in a groove, to be covered by wallboard, siding, paneling, carpeting, or similar finish, shall be protected by 1.6 mm (1/16 in.) thick steel plate, sleeve, or equivalent or by not less than 32 mm (1 ¼ in.) free space for the full length of the groove in which the cable or raceway is installed.

Exception No. 1: Steel plates, sleeves, or the equivalent shall not be required to protect rigid metal conduit, intermediate metal conduit, rigid PVC conduit, RTRC, or electrical metallic tubing.

Exception No. 2: A listed and marked steel plate less than 1.6 mm (1/16 in.) thick that provides equal or better protection against nail or screw penetration shall be permitted.

(H) Fittings.

Where raceways contain limited-energy ~~and communications~~ cables~~-~~ ~~or conductors~~ , and these cables ~~or conductors~~ enter a cabinet, a box, an enclosure, or a raceway, prior to the installation of ~~conductors~~ cables , the ~~conductors~~ cables shall be protected in accordance with any of the following:

(1) An identified fitting providing a smoothly rounded insulating surface

(2) A listed metal fitting that has smoothly rounded edges

(3) Separation from the fitting or raceway using an identified insulating material that is securely fastened in place

(4) Threaded hubs or bosses that are an integral part of a cabinet, box, enclosure, or raceway providing a smoothly rounded or flared entry for conductors

Conduit bushings constructed wholly of insulating material shall not be used to secure a fitting or raceway. The insulating fitting or insulating material shall have a temperature rating not less than the insulation temperature rating of the installed conductors.

(I) Structural Joints.

A listed expansion/deflection fitting or other approved means shall be used where a raceway crosses a structural joint intended for expansion, contraction, or deflection, used in buildings, bridges, parking garages, or other structures.

(J) In Hoistways.

In hoistways, limited energy ~~and communications~~ cables shall be installed in rigid metal conduit, rigid nonmetallic conduit, intermediate metal conduit, liquidtight flexible nonmetallic conduit, or electrical metallic tubing. For elevators or similar equipment, these conductors shall be permitted to be installed as provided in 620.21.

(K) Safety-Control Equipment.

Where damage to limited-energy ~~and communications~~ cables ~~and conductors~~ can result in a failure of safety-control equipment that would introduce a direct fire or life hazard, all ~~such conductors and cables~~ such cables shall be protected from physical damage.

Exception: Room thermostats, water temperature regulating devices, and similar controls used in conjunction with electrically controlled household heating and air conditioning shall not be considered safety-control equipment.

Additional Proposed Changes

File Name	Description	Approved
Limited_Energy_Roster-2026_2nd_Draft.pdf	Limited-Energy Task Group Roster-2nd Draft	

Statement of Problem and Substantiation for Public Comment

This public comment is submitted on behalf of the Limited-Energy Task Group (see attached roster) to delete redundant language in section 720.6(A). 720.6(B), 720.6(H), 720.6(J), & 720.6(K) as the new definition of limited-energy cables proposed by companion PC-1371 includes communications cables. Upon the approval PC-1371 there will be no need for this redundant text.

Related Public Comments for This Document

Related Comment	Relationship
Public Comment No. 1371-NFPA 70-2024 [New Definition after Definition: Cable Joint.]	PC to create new definition of limited-energy cables

Related Item

• FCR-221

Submitter Information Verification

Submitter Full Name: Kyle Krueger
Organization: NECA
Affiliation: NECA
Street Address:
City:
State:
Zip:

Submittal Date: Fri Aug 23 16:24:46 EDT 2024
Committee: NEC-P03

Limited Energy Task Group [2nd Draft]					
No.	First Name	Last Name	Class.	Organization	Other Committees
1	Kyle	Krueger	[I/M]	NECA	NEC-Correlating Comittee CMP 3 NFPA 72-Correlating Committee
2	Ernie	Gallo	[U/T]	NEBScore	
3	Derrick	Atkins	[L]	Minneapolis Electrical JA	NEC-Correlating Committee CMP 5
4	Anthony	Tassone	[R/T]	UL Solutions	CMP 3 CMP 16
5	Chad	Jones	[M]	Cisco	CMP 3
6	Sam	Rokowski	[I/M]	Maddox Inc.	CMP 3
7	George	Bish	[M]	Amazon/Ring Protect Inc	CMP 16
8	Trevor	Bowmer	[U]	Telecom Consulting	NEC Correlating Committee CMP 16
9	Ronald	Tellas	[M]	CCCA	CMP 3 CMP 16
10	Tim	Mikloiche	[E]	IAEI	CMP 3
11	Ryan	Jackosn	[M]	Steel Tube Industry	CMP 3
12	Diana	Lettkeman	[M]	Dish	CMP 16
13	John	Kacperski	[L]	IBEW	CMP 16

Public Comment No. 1695-NFPA 70-2024 [Section No. 720.6]

720.6 Protection Against Physical Damage.

(A) General.

Where subject to physical damage, conductors, raceways, and limited energy and communications cables shall be protected.

Informational Note No. 1: See ANSI/TIA-568.0-D-2015, *Generic Telecommunications Cabling for Customer Premises*, and ANSI/TIA 568.3-D-2016, *Optical Fiber Cabling and Components Standard*, for accepted industry practices.

Informational Note No. 2: See ANSI/BICSI N1-2019, *Installation Practices for Telecommunications and IC Cabling and Related Cabling Infrastructure*; ANSI/TIA-568.1- E-2020, *Commercial Building Telecommunications Infrastructure Standard*; ANSI/TIA-569-E-2019, *Telecommunications Pathways and Spaces*; ANSI/TIA-570-C-2012, *Residential Telecommunications Infrastructure Standard*; ANSI/TIA-1005-A-2012, *Telecommunications Infrastructure Standard for Industrial Premises*; ANSI/ TIA-1179-A-2017, *Healthcare Facility Telecommunications Infrastructure Standard*; ANSI/TIA-4966-2014, *Telecommunications Infrastructure Standard for Educational Facilities*; and other ANSI-approved installation standards for accepted industry practices.

~~**(B)** Cables or Conductors Installed in Raceways.~~

~~Wires and cables used for limited-energy and communications systems shall be permitted to be installed in any raceway included in Chapter 3.~~

~~**(1)** Number and Size of Cables or Conductors in a Raceway.~~

~~The number and size of limited-energy and communications conductors and cables installed in any raceway shall be determined in accordance with all of the following:~~

(1) ~~Not more cables or conductors as permitted in Chapter 9~~

(2) ~~To allow for the dissipation of heat~~

(3) ~~To permit ready installation or withdrawal of the conductors or cables without damage to the conductors or cables, or to their insulation and sheathing~~

~~**(C)** Cables and Raceways Through Wood Members.~~

~~**(1)** Bored Holes.~~

~~In both exposed and concealed locations, where a cable- or raceway-type wiring method is installed through bored holes in joists, rafters, or wood members, holes shall be bored so that the edge of the hole is not less than 32 mm (1 $^{1}/_{4}$ in.) from the edges of the wood member. Where this distance cannot be maintained, the cable or raceway shall be protected from penetration by screws or nails by a steel plate(s) or bushing(s) at least 1.6 mm ($^{1}/_{16}$ in.) thick, and of appropriate length and width, installed to cover the area of the wiring.~~

~~Exception No. 1:~~

~~Steel plates shall not be required to protect rigid metal conduit, intermediate metal conduit, rigid PVC conduit, RTRC, or electrical metallic tubing.~~ ~~Exception No. 2:~~ ~~A listed and marked steel plate less than 1.6 mm~~

~~($^{1}/_{16}$ in.) thick that provides equal or better protection against nail or screw penetration shall be permitted.~~

~~**(2)** Notches in Wood.~~

~~Where there is no objection because of weakening the building structure, in both exposed and concealed locations, cables or raceways shall be permitted to be laid in notches in wood studs, joists, rafters, or other wood members where the cable or raceway at those points is protected from penetration by nails or screws by a steel plate at least 1.6 mm ($^{1}/_{16}$ in.) thick, and of appropriate length and width, installed to cover the area of the wiring. The steel plate shall be installed before the building finish is applied.~~

~~*Exception No. 1: Steel plates shall not be required to protect rigid metal conduit, intermediate metal conduit, rigid nonmetallic conduit, or electrical metallic tubing.*~~

~~*Exception No. 2: A listed and marked steel plate less than 1.6 mm ($^{1}/_{16}$ in.) thick that provides equal or better protection against nail or screw penetration shall be permitted.*~~

~~**(D)** Limited-Energy Cables without Metallic Cable Armor Through Metal Framing Members.~~

~~**(1)** Limited-Energy Cables without Metallic Armor.~~

~~In both exposed and concealed locations where limited-energy cables without metallic armor pass through either factory- or field-punched, cut, or drilled slots or holes in metal members, the cable shall be protected by listed bushings or listed grommets covering all metal edges that are securely fastened in the opening prior to installation of the cable.~~

~~**(2)** Limited-Energy Cables Installed in HDPE or ENT.~~

~~Where nails or screws are likely to penetrate limited-energy cables without a metallic cable armor, where installed in HDPE, ENT, or similar flexible nonmetallic raceways, a protection method as specified in 720.6 shall be used to protect the cable and tubing.~~

~~*Exception: A listed and marked steel plate less than 1.6 mm ($^{1}/_{16}$ in.) thick that provides equal or better protection against nail or screw penetration shall be permitted.*~~

~~**(E)** Cables and Raceways Parallel to Framing Members and Furring Strips.~~

~~In both exposed and concealed locations, where a cable- or raceway-type wiring method is installed parallel to framing members, such as joists, rafters, or studs, or is installed parallel to furring strips, the cable or raceway shall be installed and supported so that the nearest outside surface of the cable or raceway is not less than 32 mm (1 $^{1}/_{4}$ in.) from the nearest edge of the framing member or furring strips where nails or screws are likely to penetrate. Where this distance cannot be maintained, the cable or raceway shall be protected from penetration by nails or screws by a steel plate, sleeve, or equivalent at least 1.6 mm ($^{1}/_{16}$ in.) thick.~~

~~*Exception No. 1: Steel plates, sleeves, or the equivalent shall not be required to protect rigid metal conduit, intermediate metal conduit, rigid nonmetallic conduit, or electrical metallic tubing.*~~

~~*Exception No. 2: For concealed work in finished buildings or finished panels for prefabricated buildings where such supporting is impracticable, it shall be permissible to fish the cables between access points.*~~

~~*Exception No. 3: A listed and marked steel plate less than 1.6 mm ($^{1}/_{16}$ in.) thick that provides equal or better protection against nail or screw penetration shall be permitted.*~~

~~**(F)** Cables, Raceways, or Boxes Installed in or Under Metal-Corrugated Roof Decking.~~

~~A cable, raceway, or box, installed in exposed or concealed locations under metal-corrugated sheet roof decking, shall be installed and supported so there is not less than 38 mm (1 1/2 in.) measured from the lowest surface of the roof decking to the top of the cable, raceway, or box. A cable, raceway, or box shall not be installed in concealed locations in metal-corrugated, sheet decking-type roof.~~

~~Note: Roof decking material is often repaired or replaced after the initial raceway or cabling and roofing installation and might be penetrated by screws or other mechanical devices designed to provide "hold down" strength of the waterproof membrane or roof insulating material.~~

~~Exception No. 1: Rigid metal conduit and intermediate metal conduit, with listed steel or malleable iron fittings and boxes, shall not be required to comply with 720.6(~~

G)

-

~~*Exception No. 2: The 38 mm (1 1/2 in.) spacing is not required where metal-corrugated sheet roof decking is covered with a minimum thickness 50 mm (2 in.) concrete slab, measured from the top of the corrugated roofing.*~~

~~**(G)**~~ Cables and Raceways Installed in Shallow Grooves.

Cable- or raceway-type wiring methods installed in a groove, to be covered by wallboard, siding, paneling, carpeting, or similar finish, shall be protected by 1.6 mm (1/16 in.) thick steel plate, sleeve, or equivalent or by not less than 32 mm (1 1/4 in.) free space for the full length of the groove in which the cable or raceway is installed.

Exception No. 1: Steel plates, sleeves, or the equivalent shall not be required to protect rigid metal conduit, intermediate metal conduit, rigid PVC conduit, RTRC, or electrical metallic tubing.

Exception No. 2: A listed and marked steel plate less than 1.6 mm (1/16 in.) thick that provides equal or better protection against nail or screw penetration shall be permitted.

(H) Fittings.

Where raceways contain limited-energy and communications cables or conductors, and these cables or conductors enter a cabinet, a box, an enclosure, or a raceway, prior to the installation of conductors, the conductors shall be protected in accordance with any of the following:

(1) An identified fitting providing a smoothly rounded insulating surface

(2) A listed metal fitting that has smoothly rounded edges

(3) Separation from the fitting or raceway using an identified insulating material that is securely fastened in place

(4) Threaded hubs or bosses that are an integral part of a cabinet, box, enclosure, or raceway providing a smoothly rounded or flared entry for conductors

Conduit bushings constructed wholly of insulating material shall not be used to secure a fitting or raceway. The insulating fitting or insulating material shall have a temperature rating not less than the insulation temperature rating of the installed conductors.

(

~~I) Structural Joints.~~

~~A listed expansion/deflection fitting or other approved means shall be used where a raceway crosses a structural joint intended for expansion, contraction, or deflection, used in buildings, bridges, parking garages, or other structures.~~

~~(~~

~~**J)** In Hoistways.~~

~~In hoistways, limited energy and communications cables shall be installed in rigid metal conduit, rigid nonmetallic conduit, intermediate metal conduit, liquidtight flexible nonmetallic conduit, or electrical metallic tubing. For elevators or similar equipment, these conductors shall be permitted to be installed as provided in 620.21~~ -

~~**(K)** Safety-Control Equipment.~~

~~Where damage to limited-energy and communications cables and conductors can result in a failure of safety-control equipment that would introduce a direct fire or life hazard, all such conductors and cables shall be protected from physical damage.~~

~~*Exception: Room thermostats, water temperature regulating devices, and similar controls used in conjunction with electrically controlled household heating and air conditioning shall not be considered safety-control equipment.*~~

Statement of Problem and Substantiation for Public Comment

The requirements found in the deleted first level subdivisions are covered by rules in 300.7 and do not modify the rules found in 300.7. General requirements contained in Chapters 1 through 4 shall not be repeated in other articles of the document per section 4.1,1 of the National Electrical Code Style Manual.
720.6(B) = 300.19
720.6(C) = 300.6(A)
720.6(E) = 300.6(D)
720.6(F) = 300.6(E)
720.6(I) = 300.6(H)

Related Item

- NEC_Global_FCR-221_Article_720-new_for_ballot.pdf

Submitter Information Verification

Submitter Full Name: Don Ganiere
Organization: none
Street Address:
City:
State:
Zip:

Submittal Date: Mon Aug 26 12:35:48 EDT 2024
Committee: NEC-P03

Public Comment No. 341-NFPA 70-2024 [Section No. 720.6(A)]

(A) General.

Where subject to physical damage, conductors, raceways, and limited- energy ~~and communications~~ cables shall be protected.

Informational Note No. 1: See ANSI/TIA-568.0-D-2015, *Generic Telecommunications Cabling for Customer Premises*, and ANSI/TIA 568.3-D-2016, *Optical Fiber Cabling and Components Standard*, for accepted industry practices.

Informational Note No. 2: See ANSI/BICSI N1-2019, *Installation Practices for Telecommunications and IC Cabling and Related Cabling Infrastructure*; ANSI/TIA-568.1- E-2020, *Commercial Building Telecommunications Infrastructure Standard*; ANSI/TIA-569-E-2019, *Telecommunications Pathways and Spaces*; ANSI/TIA-570-C-2012, *Residential Telecommunications Infrastructure Standard*; ANSI/TIA-1005-A-2012, *Telecommunications Infrastructure Standard for Industrial Premises*; ANSI/ TIA-1179-A-2017, *Healthcare Facility Telecommunications Infrastructure Standard*; ANSI/TIA-4966-2014, *Telecommunications Infrastructure Standard for Educational Facilities*; and other ANSI-approved installation standards for accepted industry practices.

Statement of Problem and Substantiation for Public Comment

Communications cables are limited-energy cables. It is redundant to refer to “limited-energy and communications cables”; “limited-energy cables is sufficient.

Related Public Comments for This Document

Related Comment	Relationship
Public Comment No. 127-NFPA 70-2024 [New Section after 722.1]	722.2 Listing of Limited-Energy Cables
Public Comment No. 336-NFPA 70-2024 [Section No. 720.5(B)]	
Public Comment No. 1619-NFPA 70-2024 [Article 720]	

Related Item

- Global FCR-221

Submitter Information Verification

Submitter Full Name: David Kiddoo
Organization: CCCA
Affiliation: Communications Cable & Connectivity Association
Street Address:
City:
State:
Zip:

Submittal Date: Tue Jul 30 09:05:37 EDT 2024
Committee: NEC-P03

Public Comment No. 883-NFPA 70-2024 [Section No. 720.6(B)]

(B) Cables or Conductors Installed in Raceways.

(1) Types. Wires and cables used for limited-energy and communications systems shall be permitted to be installed in any raceway included in Chapter 3.

(~~1~~ 2) Number and Size of Cables or Conductors in a Raceway.

The number and size of ~~limited-energy and communications~~ conductors and cables ~~installed~~ in ~~any~~ a complete raceway shall ~~be determined in accordance with all of the following:~~

- ~~Not more cables or conductors as permitted in Chapter~~ 9
- ~~To allow for the dissipation of heat~~

~~To permit ready installation or withdrawal of the conductors or cables without damage to the conductors or cables, or to their insulation and sheathing~~ not exceed the allowable percentage fill specified in Chapter 9, Table 1.

Statement of Problem and Substantiation for Public Comment

This seperates the requirements into two subdivisions to comply with the Style manual. The deletetion of the text is to correlate with changes made in Article 300. The text marked for deletion is explanatory material and was removed in Article 300. There is no reason for it to exist here.

Related Item

• FCR 221

Submitter Information Verification

Submitter Full Name: Ryan Jackson
Organization: Self-employed
Street Address:
City:
State:
Zip:

Submittal Date: Wed Aug 07 12:13:31 EDT 2024
Committee: NEC-P03

Public Comment No. 343-NFPA 70-2024 [Section No. 720.6(B)(1)]

(1) Number and Size of Cables or Conductors in a Raceway.

The number and size of limited-energy ~~and communications~~ conductors and cables installed in any raceway shall be determined in accordance with all of the following:

(1) Not more cables or conductors as permitted in Chapter 9

(2) To allow for the dissipation of heat

(3) To permit ready installation or withdrawal of the conductors or cables without damage to the conductors or cables, or to their insulation and sheathing

Exception: Raceway fill requirements shall not apply to communications cables, CATV-type coaxial cables and optical fiber cables.

Statement of Problem and Substantiation for Public Comment

Communications cables are limited-energy cables. It is redundant to refer to “limited-energy and communications cables”; “limited-energy cables” is sufficient.

In FCR-233 the Correlating Committee deleted 800.110 with the Committee Statement:

“The Correlating Committee deletes sections 800.1 Info Notes 1-5 thru 800.27 & 800.110-800.171, as these requirements are now covered by the newly created Article 720, Limited Energy & Communications General Requirements.”

However, 800.100(B) only applies raceway fill requirements to network-powered broadband communications medium-power cables:

“(B) Raceway Fill. The raceway fill requirements of Chapters 3 and 9 shall apply to medium-power network-powered broadband communications cables.”

720.6(B)(1) went beyond moving requirements; it extended the raceway fill requirements to all limited-energy cables. The recommended text of this PC fixes the inadvertent extension of requirements by introducing an exception:

“Exception: Raceway fill requirements shall not apply to communications cables, CATV-type coaxial cables and optical fiber cables.”

Related Public Comments for This Document

Related Comment	Relationship
Public Comment No. 349-NFPA 70-2024 [Section No. 720.11]	Adds exception to wet listing requirement.
Public Comment No. 127-NFPA 70-2024 [New Section after 722.1]	722.2 Listing of Limited-Energy Cables
Public Comment No. 349-NFPA 70-2024 [Section No. 720.11]	
Public Comment No. 1619-NFPA 70-2024 [Article 720]	

Related Item

• Global FCR-221 • FCR-233

Submitter Information Verification

Submitter Full Name: David Kiddoo
Organization: CCCA
Affiliation: Communications Cable & Connectivity Association
Street Address:
City:
State:
Zip:

Submittal Date: Tue Jul 30 09:16:34 EDT 2024
Committee: NEC-P03

Public Comment No. 342-NFPA 70-2024 [Section No. 720.6(B) [Excluding any Sub-Sections]]

Wires and cables used for limited-energy ~~and communications~~ systems shall be permitted to be installed in any raceway included in Chapter 3.

Statement of Problem and Substantiation for Public Comment

Communications cables are limited-energy cables. It is redundant to refer to “limited-energy and communications cables”; “limited-energy cables" is sufficient.

Related Public Comments for This Document

Related Comment	Relationship
Public Comment No. 127-NFPA 70-2024 [New Section after 722.1]	722.2 Listing of Limited-Energy Cables
Public Comment No. 336-NFPA 70-2024 [Section No. 720.5(B)]	
Public Comment No. 1619-NFPA 70-2024 [Article 720]	

Related Item

- Global FCR-221

Submitter Information Verification

Submitter Full Name: David Kiddoo
Organization: CCCA
Affiliation: Communications Cable & Connectivity Association
Street Address:
City:
State:
Zip:

Submittal Date: Tue Jul 30 09:11:36 EDT 2024
Committee: NEC-P03

Public Comment No. 884-NFPA 70-2024 [Section No. 720.6(D)(2)]

(2) Limited-Energy Cables Installed in HDPE or ENT.

Where nails or screws are likely to penetrate limited-energy cables without a metallic cable armor, where installed in ~~HDPE~~ LFNC , ENT, or similar flexible nonmetallic raceways, a protection method as specified in 720.6 shall be used to protect the cable and tubing.

Exception: A listed and marked steel plate less than 1.6 mm (1/16 in.) thick that provides equal or better protection against nail or screw penetration shall be permitted.

Statement of Problem and Substantiation for Public Comment

HDPE is not flexible and is not permitted inside of a building. See 353.12

Related Item

- FCR 221

Submitter Information Verification

Submitter Full Name: Ryan Jackson
Organization: Self-employed
Street Address:
City:
State:
Zip:

Submittal Date: Wed Aug 07 12:17:04 EDT 2024
Committee: NEC-P03

Public Comment No. 344-NFPA 70-2024 [Section No. 720.6(H)]

(H) Fittings.

Where raceways contain limited-energy ~~and communications~~ cables or conductors, and these cables or conductors enter a cabinet, a box, an enclosure, or a raceway, prior to the installation of conductors, the conductors shall be protected in accordance with any of the following:

(1) An identified fitting providing a smoothly rounded insulating surface

(2) A listed metal fitting that has smoothly rounded edges

(3) Separation from the fitting or raceway using an identified insulating material that is securely fastened in place

(4) Threaded hubs or bosses that are an integral part of a cabinet, box, enclosure, or raceway providing a smoothly rounded or flared entry for conductors

Conduit bushings constructed wholly of insulating material shall not be used to secure a fitting or raceway. The insulating fitting or insulating material shall have a temperature rating not less than the insulation temperature rating of the installed conductors.

Statement of Problem and Substantiation for Public Comment

Communications cables are limited-energy cables. It is redundant to refer to “limited-energy and communications cables”; “limited-energy cables” is sufficient.

Related Public Comments for This Document

Related Comment	Relationship
Public Comment No. 127-NFPA 70-2024 [New Section after 722.1]	722.2 Listing of Limited-Energy Cables
Public Comment No. 336-NFPA 70-2024 [Section No. 720.5(B)]	
Public Comment No. 1619-NFPA 70-2024 [Article 720]	

Related Item

- Global FCR-221

Submitter Information Verification

Submitter Full Name: David Kiddoo
Organization: CCCA
Affiliation: Communications Cable & Connectivity Association
Street Address:
City:
State:
Zip:

Submittal Date: Tue Jul 30 09:31:14 EDT 2024
Committee: NEC-P03

Public Comment No. 885-NFPA 70-2024 [Section No. 720.6(H)]

~~**(H)** Fittings.~~

~~Where raceways contain limited-energy and communications cables or conductors, and these cables or conductors enter a cabinet, a box, an enclosure, or a raceway, prior to the installation of conductors, the conductors shall be protected in accordance with any of the following:~~

(1) ~~An identified fitting providing a smoothly rounded insulating surface~~

(2) ~~A listed metal fitting that has smoothly rounded edges~~

(3) ~~Separation from the fitting or raceway using an identified insulating material that is securely fastened in place~~

(4) ~~Threaded hubs or bosses that are an integral part of a cabinet, box, enclosure, or raceway providing a smoothly rounded or flared entry for conductors~~

~~Conduit bushings constructed wholly of insulating material shall not be used to secure a fitting or raceway. The insulating fitting or insulating material shall have a temperature rating not less than the insulation temperature rating of the installed conductors.~~

Statement of Problem and Substantiation for Public Comment

You don't need a bushing for a 50A, 480V installation of THHN but you do for a Class 2 circuit that is inherently safe from fire and electric shock?? Please substantiate this.

Related Item

• FCR 221

Submitter Information Verification

Submitter Full Name: Ryan Jackson
Organization: Self-employed
Street Address:
City:
State:
Zip:

Submittal Date: Wed Aug 07 12:19:17 EDT 2024
Committee: NEC-P03

Public Comment No. 345-NFPA 70-2024 [Section No. 720.6(J)]

(J) In Hoistways.

In hoistways, limited- energy ~~and communications~~ cables shall be installed in rigid metal conduit, rigid nonmetallic conduit, intermediate metal conduit, liquidtight flexible nonmetallic conduit, or electrical metallic tubing. For elevators or similar equipment, these conductors shall be permitted to be installed as provided in 620.21.

Statement of Problem and Substantiation for Public Comment

Communications cables are limited-energy cables. It is redundant to refer to “limited-energy and communications cables”; “limited-energy cables” is sufficient.

Related Public Comments for This Document

Related Comment	Relationship
Public Comment No. 127-NFPA 70-2024 [New Section after 722.1]	722.2 Listing of Limited-Energy Cables
Public Comment No. 336-NFPA 70-2024 [Section No. 720.5(B)]	
Public Comment No. 1619-NFPA 70-2024 [Article 720]	

Related Item

- Global FCR-221

Submitter Information Verification

Submitter Full Name: David Kiddoo
Organization: CCCA
Affiliation: Communications Cable & Connectivity Association
Street Address:
City:
State:
Zip:

Submittal Date: Tue Jul 30 09:34:37 EDT 2024
Committee: NEC-P03

Public Comment No. 886-NFPA 70-2024 [Section No. 720.6(J)]

~~(J) In Hoistways.~~

~~In hoistways, limited energy and communications cables shall be installed in rigid metal conduit, rigid nonmetallic conduit, intermediate metal conduit, liquidtight flexible nonmetallic conduit, or electrical metallic tubing. For elevators or similar equipment, these conductors shall be permitted to be installed as provided in 620.21 .~~

Statement of Problem and Substantiation for Public Comment

Article 720 is supposed to be general requirements. This is not a general requirement, it is a very specific requirement. So specific ,in fact, that it is specifially addressed in the appropriate article, Article 620. There is no need to place it here, then have to worry about the accuracy of the requirement as the rules in Article 620 evolve. CMP doesn't, and shouldn't, have purview over this matter.

Related Item

- FCR 221

Submitter Information Verification

Submitter Full Name: Ryan Jackson
Organization: Self-employed
Street Address:
City:
State:
Zip:

Submittal Date: Wed Aug 07 12:21:23 EDT 2024
Committee: NEC-P03

Public Comment No. 346-NFPA 70-2024 [Section No. 720.6(K)]

(K) Safety-Control Equipment.

Where damage to limited-energy ~~and communications~~ cables and conductors can result in a failure of safety-control equipment that would introduce a direct fire or life hazard, all such conductors and cables shall be protected from physical damage.

Exception: Room thermostats, water temperature regulating devices, and similar controls used in conjunction with electrically controlled household heating and air conditioning shall not be considered safety-control equipment.

Statement of Problem and Substantiation for Public Comment

Communications cables are limited-energy cables. It is redundant to refer to “limited-energy and communications cables”; “limited-energy cables” is sufficient.

Related Public Comments for This Document

Related Comment	Relationship
Public Comment No. 127-NFPA 70-2024 [New Section after 722.1]	722.2 Listing of Limited-Energy Cables
Public Comment No. 336-NFPA 70-2024 [Section No. 720.5(B)]	
Public Comment No. 1619-NFPA 70-2024 [Article 720]	

Related Item

- Global FCR-221

Submitter Information Verification

Submitter Full Name: David Kiddoo
Organization: CCCA
Affiliation: Communications Cable & Connectivity Association
Street Address:
City:
State:
Zip:

Submittal Date: Tue Jul 30 09:37:37 EDT 2024
Committee: NEC-P03

Public Comment No. 888-NFPA 70-2024 [Section No. 720.6(K)]

(K) Safety-Control Equipment.

Where damage to limited-energy and communications cables and conductors can result in a failure of safety-control equipment that would introduce a direct fire or life hazard, all such conductors and cables shall be protected from physical damage.

~~Exception: Room~~

Room thermostats, water temperature regulating devices, and similar controls used in conjunction with electrically controlled household heating and air conditioning shall not be considered safety-control equipment.

Statement of Problem and Substantiation for Public Comment

This exception is not excepting out any requirements. As it indicates, thermostats (and the other equipment) are not covered by this rule, so how do we have an exception for them? The material is worth retaining and should not be relegated to an Informational Note, but it should not be written as an exception either.

Related Item

• FCR 221

Submitter Information Verification

Submitter Full Name: Ryan Jackson
Organization: Self-employed
Street Address:
City:
State:
Zip:

Submittal Date: Wed Aug 07 12:24:19 EDT 2024
Committee: NEC-P03

Public Comment No. 1698-NFPA 70-2024 [Section No. 720.7]

~~**720.7** Protection Against Corrosion and Deterioration.~~

~~Raceways, cable trays, cablebus, auxiliary gutters, cable armor, boxes, cable sheathing, cabinets, enclosures (other than surrounding fences and walls), elbows, couplings, fittings, supports, and support hardware, installed for use with limited-energy and communications systems, shall be of materials suitable for the environment in which they are to be installed.~~

~~**(A)** Ferrous Metal Equipment.~~

~~Ferrous metal raceways, cable trays, cablebus, auxiliary gutters, cable armor, boxes, cable sheathing, cabinets, enclosures (other than surrounding fences and walls), elbows, couplings, nipples, fittings, supports, and support hardware shall be suitably protected against corrosion inside and outside (except threads at joints) by a coating of approved corrosion-resistant material. Where corrosion protection is necessary and the conduit is threaded anywhere other than at the factory where the product is listed, the threads shall be coated with an approved electrically conductive, corrosion-resistant compound.~~

~~*Exception:* *Stainless steel shall not be required to have protective coatings.*~~

~~**(1)** Protected from Corrosion Solely by Enamel.~~

~~Where protected from corrosion solely by enamel, ferrous metal raceways, cable trays, cablebus, auxiliary gutters, cable armor, boxes, cable sheathing, cabinets, enclosures (other than surrounding fences and walls), elbows, couplings, nipples, fittings, supports, and support hardware shall not be used outdoors or in wet locations as described in 300.6(D) .~~

~~**(2)** Organic Coatings on Boxes or Cabinets.~~

~~Where boxes, cabinets, or enclosures (other than surrounding fences and walls) have an approved system of organic coatings and are marked "Raintight," "Rainproof," or "Outdoor Type," they shall be permitted outdoors.~~

~~**(3)** In Concrete or in Direct Contact with the Earth.~~

~~Ferrous metal raceways, cable armor, boxes, cable sheathing, cabinets, enclosures (other than surrounding fences and walls), elbows, couplings, nipples, fittings, supports, and support hardware shall be permitted to be installed in concrete, in direct contact with the earth, or in areas subject to severe corrosive influences where made of material approved for the condition or where provided with corrosion protection approved for the condition.~~

~~**(B)** Aluminum Metal Equipment.~~

~~Aluminum raceways, cable trays, cablebus, auxiliary gutters, cable armor, boxes, cable sheathing, cabinets, enclosures (other than surrounding fences and walls), elbows, couplings, nipples, fittings, supports, and support hardware embedded or encased in concrete or in direct contact with the earth shall be provided with supplementary corrosion protection.~~

~~**(C)** Nonmetallic Equipment.~~

~~Nonmetallic raceways, cable trays, cablebus, auxiliary gutters, boxes, cables with a nonmetallic outer jacket and internal metal armor or jacket, cable sheathing, cabinets, enclosures (other than surrounding fences and walls), elbows, couplings, nipples, fittings, supports, and support hardware shall be made of material approved for the condition and shall comply with 720.7(C)(1) and 720.7(C)(2) as applicable to the specific installation.~~

~~**(1)** Exposed to Sunlight.~~

~~Where exposed to sunlight, the materials shall be listed as sunlight resistant or shall be identified as sunlight resistant.~~

~~**(2)** Chemical Exposure.~~

~~Where subject to exposure to chemical solvents, vapors, splashing, or immersion, materials or coatings shall either be inherently resistant to chemicals based on their listing or be identified for the specific chemical reagent.~~

~~**(D)** Indoor Wet Locations.~~

~~In portions of dairy processing facilities, laundries, canneries, and other indoor wet locations, and in locations where walls are frequently washed or where there are surfaces of absorbent materials, such as damp paper or wood, the entire wiring system, where installed exposed, including all boxes, cabinets, enclosures (other than surrounding fences and walls), fittings, raceways, and cable used therewith, shall be mounted so that there is at least a 6 mm (4/4 in.) airspace between it and the wall or supporting surface.~~

~~*Exception:* *Nonmetallic raceways, boxes, and fittings shall be permitted to be installed without the airspace on a concrete, masonry, tile, or similar surface.*~~

~~Informational Note: In general, areas where acids and alkali chemicals are handled and stored might present such corrosive conditions, particularly when wet or damp. Severe corrosive conditions might also be present in portions of meatpacking plants, tanneries, glue houses, and some stables; in installations immediately adjacent to a seashore and swimming pool areas; in areas where chemical deicers are used; and in storage cellars or rooms for hides, casings, fertilizer, salt, and bulk chemicals.~~

Statement of Problem and Substantiation for Public Comment

720.7 is identical to 300.8 and does not modify the requirements of 300.8. General requirements contained in Chapters 1 through 4 shall not be repeated in other articles of the document per section 4.1,1 of the National Electrical Code Style Manual.

Related Item

- NEC_Global_FCR-221_Article_720-new_for_ballot.pdf

Submitter Information Verification

Submitter Full Name: Don Ganiere
Organization: none
Street Address:
City:
State:
Zip:

Submittal Date: Mon Aug 26 12:45:18 EDT 2024
Committee: NEC-P03

Public Comment No. 889-NFPA 70-2024 [Section No. 720.7]

720.7 Protection Against Corrosion and Deterioration.

Raceways, cable trays, cablebus, auxiliary gutters, cable armor, boxes, cable sheathing, cabinets, enclosures ~~(other than surrounding fences and walls)~~ , elbows, couplings, fittings, supports, and support hardware, installed for use with limited-energy and communications systems, shall be of materials suitable for the environment in which they are to be installed. For the purposes of this section, enclosures shall not include fences or walls surrounding electrical equipment.

(A) Ferrous Metal Equipment.

Ferrous metal raceways, cable trays, cablebus, auxiliary gutters, cable armor, boxes, cable sheathing, cabinets, enclosures ~~(other than surrounding fences and walls)~~ , elbows, couplings, nipples, fittings, supports, and support hardware shall be suitably protected against corrosion ~~inside and outside (except threads at joints)~~ by a coating of approved corrosion-resistant material. Where corrosion protection is necessary and the conduit is threaded anywhere other than at the factory where the product is listed, the threads shall be coated with an approved electrically conductive, corrosion-resistant compound.

Exception: Stainless steel shall not be required to have protective coatings.

(1) Protected from Corrosion Solely by Enamel.

Where protected from corrosion solely by enamel, ferrous metal raceways, cable trays, cablebus, auxiliary gutters, cable armor, boxes, cable sheathing, cabinets, enclosures ~~(other than surrounding fences and walls)~~ , elbows, couplings, nipples, fittings, supports, and support hardware shall not be used outdoors or in wet locations as described in 300.6(D).

(2) Organic Coatings on Boxes or Cabinets.

Where boxes, cabinets, or enclosures ~~(other than surrounding fences and walls)~~ have an approved system of organic coatings and are marked "Raintight," "Rainproof," or "Outdoor Type," they shall be permitted outdoors.

(3) In Concrete or in Direct Contact with the Earth.

Ferrous metal raceways, cable armor, boxes, cable sheathing, cabinets, enclosures ~~(other than surrounding fences and walls)~~ , elbows, couplings, nipples, fittings, supports, and support hardware shall be permitted to be installed in concrete, in direct contact with the earth, or in areas subject to severe corrosive influences where made of material approved for the condition or where provided with corrosion protection approved for the condition.

(B) Aluminum Metal Equipment.

Aluminum raceways, cable trays, cablebus, auxiliary gutters, cable armor, boxes, cable sheathing, cabinets, enclosures ~~(other than surrounding fences and walls)~~ , elbows, couplings, nipples, fittings, supports, and support hardware embedded or encased in concrete or in direct contact with the earth shall be provided with supplementary corrosion protection.

(C) Nonmetallic Equipment.

Nonmetallic raceways, cable trays, cablebus, auxiliary gutters, boxes, cables with a nonmetallic outer jacket and internal metal armor or jacket, cable sheathing, cabinets, enclosures ~~(other than surrounding fences and walls)~~ , elbows, couplings, nipples, fittings, supports, and support hardware shall be made of material approved for the condition and shall comply with 720.7(C)(1) and 720.7(C)(2) as applicable to the specific installation.

(1) Exposed to Sunlight.

Where exposed to sunlight, the materials shall be listed as sunlight resistant or shall be identified as sunlight resistant.

(2) Chemical Exposure.

Where subject to exposure to chemical solvents, vapors, splashing, or immersion, materials or coatings shall either be inherently resistant to chemicals based on their listing or be identified for the specific chemical reagent.

(D) Indoor Wet Locations.

In portions of dairy processing facilities, laundries, canneries, and other indoor wet locations, and in locations where walls are frequently washed or where there are surfaces of absorbent materials, such as damp paper or wood, the entire wiring system, where installed exposed, including all boxes, cabinets, enclosures ~~(other than surrounding fences and walls)~~ , fittings, raceways, and cable used therewith, shall be mounted so that there is at least a 6 mm (¼ in.) airspace between it and the wall or supporting surface.

Exception: Nonmetallic raceways, boxes, and fittings shall be permitted to be installed without the airspace on a concrete, masonry, tile, or similar surface.

Informational Note: In general, areas where acids and alkali chemicals are handled and stored might present such corrosive conditions, particularly when wet or damp. Severe corrosive conditions might also be present in portions of meatpacking plants, tanneries, glue houses, and some stables; in installations immediately adjacent to a seashore and swimming pool areas; in areas where chemical deicers are used; and in storage cellars or rooms for hides, casings, fertilizer, salt, and bulk chemicals.

Statement of Problem and Substantiation for Public Comment

These changes are intended to satisfy the requirements of the NEC Style Manual as it relates to the use of parenthetical language. By indicating that this section does not apply to fences and walls used as enclosures, most of the parenthetical language of this section can be removed. The language about protection from corrosion both inside and outside except at joints can be deleted because it is handled by the product standards of either the fitting (UL 514B) or the wiring methods (such as UL 6). If the corrosion resistance required by the product standards has been removed due to the threads being cut in the field, this section already has requirements that it be applied in the field.

Related Public Comments for This Document

Related Comment	Relationship
Public Comment No. 378-NFPA 70-2024 [Section No. 300.8]	Same comment for Art 300

Related Item

- FCR 221

Submitter Information Verification

Submitter Full Name: Ryan Jackson
Organization: Self-employed
Street Address:
City:

State:
Zip:
Submittal Date: Wed Aug 07 12:27:43 EDT 2024
Committee: NEC-P03

Public Comment No. 1514-NFPA 70-2024 [Section No. 720.7 [Excluding any Sub-Sections]]

Raceways, cable trays, cablebus, auxiliary gutters, cable armor, boxes, cable sheathing, cabinets, enclosures (other than surrounding fences and walls), elbows, couplings, fittings, supports, and support hardware, installed for use with limited-~~energy and communications systems~~ energy systems , shall be of materials suitable for the environment in which they are to be installed.

Additional Proposed Changes

File Name	Description	Approved
Limited_Energy_Roster-2026_2nd_Draft.pdf	Limited-Energy Task Group Roster-2nd Draft	

Statement of Problem and Substantiation for Public Comment

This public comment is submitted on behalf of the Limited-Energy Task Group (see attached roster) to delete redundant language in section 720.7 as the new definition of limited-energy cables proposed by companion PC-1371 includes communications cables. Upon the approval PC-1371 there will be no need for this redundant text.

Related Public Comments for This Document

Related Comment	Relationship
Public Comment No. 1371-NFPA 70-2024 [New Definition after Definition: Cable Joint.]	PC to create new definition for limited-energy cables.

Related Item

- FCR-221

Submitter Information Verification

Submitter Full Name: Kyle Krueger
Organization: NECA
Affiliation: NECA
Street Address:
City:
State:
Zip:

Submittal Date: Fri Aug 23 16:32:13 EDT 2024
Committee: NEC-P03

Limited Energy Task Group [2nd Draft]					
No.	First Name	Last Name	Class.	Organization	Other Committees
1	Kyle	Krueger	[I/M]	NECA	NEC-Correlating Comittee CMP 3 NFPA 72-Correlating Committee
2	Ernie	Gallo	[U/T]	NEBScore	
3	Derrick	Atkins	[L]	Minneapolis Electrical JA	NEC-Correlating Committee CMP 5
4	Anthony	Tassone	[R/T]	UL Solutions	CMP 3 CMP 16
5	Chad	Jones	[M]	Cisco	CMP 3
6	Sam	Rokowski	[I/M]	Maddox Inc.	CMP 3
7	George	Bish	[M]	Amazon/Ring Protect Inc	CMP 16
8	Trevor	Bowmer	[U]	Telecom Consulting	NEC Correlating Committee CMP 16
9	Ronald	Tellas	[M]	CCCA	CMP 3 CMP 16
10	Tim	Mikloiche	[E]	IAEI	CMP 3
11	Ryan	Jackosn	[M]	Steel Tube Industry	CMP 3
12	Diana	Lettkeman	[M]	Dish	CMP 16
13	John	Kacperski	[L]	IBEW	CMP 16

Public Comment No. 347-NFPA 70-2024 [Section No. 720.7 [Excluding any Sub-Sections]]

Raceways, cable trays, cablebus, auxiliary gutters, cable armor, boxes, cable sheathing, cabinets, enclosures (other than surrounding fences and walls), elbows, couplings, fittings, supports, and support hardware, installed for use with limited-energy ~~and communications~~ systems, shall be of materials suitable for the environment in which they are to be installed.

Statement of Problem and Substantiation for Public Comment

Communications cables are limited-energy cables. It is redundant to refer to “limited-energy and communications cables”; “limited-energy cables” is sufficient.

Related Public Comments for This Document

Related Comment	Relationship
Public Comment No. 127-NFPA 70-2024 [New Section after 722.1]	722.2 Listing of Limited-Energy Cables
Public Comment No. 336-NFPA 70-2024 [Section No. 720.5(B)]	
Public Comment No. 1619-NFPA 70-2024 [Article 720]	

Related Item

- Global FCR-221

Submitter Information Verification

Submitter Full Name: David Kiddoo
Organization: CCCA
Affiliation: Communications Cable & Connectivity Association
Street Address:
City:
State:
Zip:

Submittal Date: Tue Jul 30 10:01:53 EDT 2024
Committee: NEC-P03

Public Comment No. 1700-NFPA 70-2024 [Section No. 720.8]

~~**720.8** Raceways Exposed to Different Temperatures.~~

~~**(A)** Sealing.~~

~~Where portions of a raceway or sleeve are known to be subjected to different temperatures, and where condensation is known to be a problem, as in cold storage areas of buildings or where passing from the interior to the exterior of a building, the raceway or sleeve shall be sealed to prevent the circulation of warm air to a colder section of the raceway or sleeve. Sealants shall be identified for use with cable insulation, conductor insulation, a bare conductor, a shield, or other components. An explosionproof seal shall not be required for this purpose.~~

~~**(B)** Expansion, Expansion-Deflection, and Deflection Fittings.~~

~~Raceways shall be provided with expansion, expansion-deflection, or deflection fittings where necessary to compensate for thermal expansion, deflection, and contraction.~~

~~Informational Note No. 1: Table 352.44(A) and Table 355.44 provide the expansion information for polyvinyl chloride (PVC) and for reinforced thermosetting resin conduit (RTRC), respectively. A nominal number for steel conduit can be determined by multiplying the expansion length in Table 352.44(A) by 0.20. The coefficient of expansion for steel electrical metallic tubing, intermediate metal conduit, and rigid metal conduit is 1.170×10^{-5} (0.0000117 mm per mm of conduit for each °C in temperature change) [0.650×10^{-5} (0.0000065 in. per in. of conduit for each °F in temperature change)]. A nominal number for aluminum conduit and aluminum electrical metallic tubing can be determined by multiplying the expansion length in Table 352.44(A) by 0.40. The coefficient of expansion for aluminum electrical metallic tubing and aluminum rigid metal conduit is 2.34×10^{-5} (0.0000234 mm per mm of conduit for each °C in temperature change) [1.30×10^{-5} (0.000013 in. per in. of conduit for each °F in temperature change)].~~

~~Informational Note No. 2: See NEMA FB 2.40-2019, *Installation Guidelines for Expansion and Expansion/Deflection Fittings* , for further information on expansion and expansion deflection fittings.~~

Statement of Problem and Substantiation for Public Comment

720.8 is identical to 300.9 and does not modify the requirements of 300.9. General requirements contained in Chapters 1 through 4 shall not be repeated in other articles of the document per section 4.1,1 of the National Electrical Code Style Manual.

Related Item

- NEC_Global_FCR-221_Article_720-new_for_ballot.pdf

Submitter Information Verification

Submitter Full Name: Don Ganiere
Organization: none
Street Address:
City:
State:
Zip:

Submittal Date: Mon Aug 26 12:48:06 EDT 2024
Committee: NEC-P03

Public Comment No. 1531-NFPA 70-2024 [New Section after 720.8(B)]

720.9 Dwelling Unit Communications Outlet.

For new construction, a minimum of one communications outlet shall be installed in accordance with (1)-(3):

(1) Within a dwelling unit

(2) In a readily accessible area

(3) Cabled to the service provider demarcation point

Additional Proposed Changes

File Name	Description	Approved
Limited_Energy_Roster-2026_2nd_Draft.pdf	Limited-Energy Task Group Roster-2nd Draft	

Statement of Problem and Substantiation for Public Comment

This public comment is submitted on behalf of the Limited-Energy Task Group (see attached roster) to relocate section 805.156 to new Article 720, specifically section 720.9. This requirement is general in nature to communications installations, as such it is more appropriately located in this new article for general requirements for limited-energy and communications installations. The section was also restructured into a list format for clarity in accordance with section 3.5.1.2 of the NEC Style Manual as it contained multiple requirements in one section.

Related Public Comments for This Document

Related Comment	Relationship
Public Comment No. 1533-NFPA 70-2024 [Section No. 722.133(E)]	PC to delete this requirement from section 722.133(E)
Public Comment No. 1541-NFPA 70-2024 [Article 805]	PC deleting section 805.156
Public Comment No. 1533-NFPA 70-2024 [Section No. 722.133(E)]	
Public Comment No. 1541-NFPA 70-2024 [Article 805]	

Related Item

- FCR-221

Submitter Information Verification

Submitter Full Name: Kyle Krueger
Organization: NECA
Affiliation: NECA
Street Address:
City:
State:
Zip:

Submittal Date: Fri Aug 23 16:56:38 EDT 2024
Committee: NEC-P03

Limited Energy Task Group [2nd Draft]					
No.	First Name	Last Name	Class.	Organization	Other Committees
1	Kyle	Krueger	[I/M]	NECA	NEC-Correlating Comittee CMP 3 NFPA 72-Correlating Committee
2	Ernie	Gallo	[U/T]	NEBScore	
3	Derrick	Atkins	[L]	Minneapolis Electrical JA	NEC-Correlating Committee CMP 5
4	Anthony	Tassone	[R/T]	UL Solutions	CMP 3 CMP 16
5	Chad	Jones	[M]	Cisco	CMP 3
6	Sam	Rokowski	[I/M]	Maddox Inc.	CMP 3
7	George	Bish	[M]	Amazon/Ring Protect Inc	CMP 16
8	Trevor	Bowmer	[U]	Telecom Consulting	NEC Correlating Committee CMP 16
9	Ronald	Tellas	[M]	CCCA	CMP 3 CMP 16
10	Tim	Mikloiche	[E]	IAEI	CMP 3
11	Ryan	Jackosn	[M]	Steel Tube Industry	CMP 3
12	Diana	Lettkeman	[M]	Dish	CMP 16
13	John	Kacperski	[L]	IBEW	CMP 16

Public Comment No. 1515-NFPA 70-2024 [Section No. 720.10]

720.10 Installation of Limited-~~Energy~~ Energy Cables and ~~Communications Cables and~~ Conductors with Non-Electrical Systems.

Raceways or cable trays containing limited-energy ~~or communications~~ cables and conductors shall not contain any pipe, tube, or other means for steam, water, air, gas, drainage, or any service other than electrical installations as permitted elsewhere in this code.

Additional Proposed Changes

File Name	Description	Approved
Limited_Energy_Roster-2026_2nd_Draft.pdf	Limited-Energy Task Group Roster-2nd Draft	

Statement of Problem and Substantiation for Public Comment

This public comment is submitted on behalf of the Limited-Energy Task Group (see attached roster) to delete redundant language in section 720.10 as the new definition of limited-energy cables proposed by companion PC-1371 includes communications cables. Upon the approval PC-1371 there will be no need for this redundant text.

Related Public Comments for This Document

Related Comment	Relationship
Public Comment No. 1371-NFPA 70-2024 [New Definition after Definition: Cable Joint.]	PC to create new definition for limited-energy cables.

Related Item

- FCR-221

Submitter Information Verification

Submitter Full Name: Kyle Krueger
Organization: NECA
Affiliation: NECA
Street Address:
City:
State:
Zip:

Submittal Date: Fri Aug 23 16:33:46 EDT 2024
Committee: NEC-P03

Limited Energy Task Group [2nd Draft]					
No.	First Name	Last Name	Class.	Organization	Other Committees
1	Kyle	Krueger	[I/M]	NECA	NEC-Correlating Comittee CMP 3 NFPA 72-Correlating Committee
2	Ernie	Gallo	[U/T]	NEBScore	
3	Derrick	Atkins	[L]	Minneapolis Electrical JA	NEC-Correlating Committee CMP 5
4	Anthony	Tassone	[R/T]	UL Solutions	CMP 3 CMP 16
5	Chad	Jones	[M]	Cisco	CMP 3
6	Sam	Rokowski	[I/M]	Maddox Inc.	CMP 3
7	George	Bish	[M]	Amazon/Ring Protect Inc	CMP 16
8	Trevor	Bowmer	[U]	Telecom Consulting	NEC Correlating Committee CMP 16
9	Ronald	Tellas	[M]	CCCA	CMP 3 CMP 16
10	Tim	Mikloiche	[E]	IAEI	CMP 3
11	Ryan	Jackosn	[M]	Steel Tube Industry	CMP 3
12	Diana	Lettkeman	[M]	Dish	CMP 16
13	John	Kacperski	[L]	IBEW	CMP 16

Public Comment No. 348-NFPA 70-2024 [Section No. 720.10]

720.10 Installation of Limited-Energy ~~and Communications~~ Cables and Conductors with Non-Electrical Systems.

Raceways or cable trays containing limited-energy ~~or communications~~ cables and conductors shall not contain any pipe, tube, or other means for steam, water, air, gas, drainage, or any service other than electrical installations as permitted elsewhere in this code.

Statement of Problem and Substantiation for Public Comment

Communications cables are limited-energy cables. It is redundant to refer to “limited-energy and communications cables”; “limited-energy cables” is sufficient.

Related Public Comments for This Document

Related Comment	Relationship
Public Comment No. 127-NFPA 70-2024 [New Section after 722.1]	722.2 Listing of Limited-Energy Cables
Public Comment No. 336-NFPA 70-2024 [Section No. 720.5(B)]	
Public Comment No. 1619-NFPA 70-2024 [Article 720]	

Related Item

- Global FCR-221

Submitter Information Verification

Submitter Full Name: David Kiddoo
Organization: CCCA
Affiliation: Communications Cable & Connectivity Association
Street Address:
City:
State:
Zip:

Submittal Date: Tue Jul 30 10:07:14 EDT 2024
Committee: NEC-P03

Public Comment No. 1516-NFPA 70-2024 [Section No. 720.11]

720.11 Limited-~~Energy and Communications System~~ Energy System Raceways in Wet Locations Above Grade.

Where raceways used for limited-energy ~~and communications~~ systems are installed in wet locations above grade, the interior of these raceways shall be considered to be a wet location. Insulated cables and conductors installed in raceways in wet locations above grade shall comply with 310.10(C).

Exception: The following limited-energy cable types shall not be required to be listed for wet locations:

(1) Optical fiber cable

(2) Communications cable

(3) Coaxial Type-CATV cable

(4) Network-powered broadband low-power cable

Additional Proposed Changes

File Name	Description	Approved
Limited_Energy_Roster-2026_2nd_Draft.pdf	Limited-Energy Task Group Roster-2nd Draft	

Statement of Problem and Substantiation for Public Comment

This public comment is submitted on behalf of the Limited-Energy Task Group (see attached roster) to delete redundant language in section 720.11 as the new definition of limited-energy cables proposed by companion PC-1371 includes communications cables. Upon the approval PC-1371 there will be no need for this redundant text.

Additionally, this PC proposes to create an exception for Optical Fiber, Communications, and CATV cables as this rule was not applicable to those cable types prior to the removal of Chapter 8's independence in the first draft.

Related Public Comments for This Document

Related Comment	Relationship
Public Comment No. 1371-NFPA 70-2024 [New Definition after Definition: Cable Joint.]	PC to create new definition for limited-energy cables.

Related Item

- FCR-221

Submitter Information Verification

Submitter Full Name: Kyle Krueger
Organization: NECA
Affiliation: NECA
Street Address:
City:
State:
Zip:

Submittal Date: Fri Aug 23 16:35:36 EDT 2024
Committee: NEC-P03

Limited Energy Task Group [2nd Draft]					
No.	First Name	Last Name	Class.	Organization	Other Committees
1	Kyle	Krueger	[I/M]	NECA	NEC-Correlating Comittee CMP 3 NFPA 72-Correlating Committee
2	Ernie	Gallo	[U/T]	NEBScore	
3	Derrick	Atkins	[L]	Minneapolis Electrical JA	NEC-Correlating Committee CMP 5
4	Anthony	Tassone	[R/T]	UL Solutions	CMP 3 CMP 16
5	Chad	Jones	[M]	Cisco	CMP 3
6	Sam	Rokowski	[I/M]	Maddox Inc.	CMP 3
7	George	Bish	[M]	Amazon/Ring Protect Inc	CMP 16
8	Trevor	Bowmer	[U]	Telecom Consulting	NEC Correlating Committee CMP 16
9	Ronald	Tellas	[M]	CCCA	CMP 3 CMP 16
10	Tim	Mikloiche	[E]	IAEI	CMP 3
11	Ryan	Jackosn	[M]	Steel Tube Industry	CMP 3
12	Diana	Lettkeman	[M]	Dish	CMP 16
13	John	Kacperski	[L]	IBEW	CMP 16

Public Comment No. 1701-NFPA 70-2024 [Section No. 720.11]

~~**720.11** Limited-Energy and Communications System Raceways in Wet Locations Above Grade.~~

~~Where raceways used for limited-energy and communications systems are installed in wet locations above grade, the interior of these raceways shall be considered to be a wet location. Insulated cables and conductors installed in raceways in wet locations above grade shall comply with 310.10(C) .~~

Statement of Problem and Substantiation for Public Comment

720.11 contains the same requirements as found in 300.11. General requirements contained in Chapters 1 through 4 shall not be repeated in other articles of the document per section 4.1,1 of the National Electrical Code Style Manual.

Related Item

- NEC_Global_FCR-221_Article_720-new_for_ballot.pdf

Submitter Information Verification

Submitter Full Name: Don Ganiere
Organization: none
Street Address:
City:
State:
Zip:

Submittal Date: Mon Aug 26 12:50:20 EDT 2024
Committee: NEC-P03

Public Comment No. 349-NFPA 70-2024 [Section No. 720.11]

720.11 Limited-Energy ~~and Communications~~ System Raceways in Wet Locations Above Grade.

Where raceways used for limited-energy ~~and communications~~ systems are installed in wet locations above grade, the interior of these raceways shall be considered to be a wet location. Insulated cables and conductors installed in raceways in wet locations above grade shall comply with 310.10(C).

Exception: Communications cables, CATV-type coaxial cables, optical fiber cables and network-powered broadband low-power communications cables shall not be required to be listed for wet locations.

Statement of Problem and Substantiation for Public Comment

Wet rated communications cables, CATV-type coaxial cables, optical fiber cables and network-powered broadband communications cables do not exist.

Related Public Comments for This Document

Related Comment	Relationship
Public Comment No. 343-NFPA 70-2024 [Section No. 720.6(B)(1)]	Adds exception to wet listing requirement.
Public Comment No. 127-NFPA 70-2024 [New Section after 722.1]	722.2 Listing of Limited-Energy Cables
Public Comment No. 343-NFPA 70-2024 [Section No. 720.6(B)(1)]	
Public Comment No. 1619-NFPA 70-2024 [Article 720]	

Related Item

- Global FCR-221

Submitter Information Verification

Submitter Full Name: David Kiddoo
Organization: CCCA
Affiliation: Communications Cable & Connectivity Association
Street Address:
City:
State:
Zip:

Submittal Date: Tue Jul 30 10:14:43 EDT 2024
Committee: NEC-P03

Public Comment No. 890-NFPA 70-2024 [Section No. 720.11]

720.11 Limited-Energy and Communications System Raceways in Wet Locations Above Grade.

Where raceways used for limited-energy and communications systems are installed in wet locations above grade, the interior of these raceways shall be considered to be a wet location. Insulated cables and conductors installed in raceways in wet locations above grade shall comply with ~~310~~ 722 . ~~10~~ 100 (~~C~~ A) (11) .

Statement of Problem and Substantiation for Public Comment

Section 722.100(A)(11) is the correct reference, not 310.10(C).

Related Item

- FCR 238

Submitter Information Verification

Submitter Full Name: Ryan Jackson
Organization: Self-employed
Street Address:
City:
State:
Zip:

Submittal Date: Wed Aug 07 12:31:22 EDT 2024
Committee: NEC-P03

Public Comment No. 891-NFPA 70-2024 [Section No. 720.14]

~~**720.14** Mechanical Continuity — Raceways and Cables.~~

~~**(A)** General.~~

~~Raceways, cable armors, and cable sheaths shall be continuous between cabinets, boxes, conduit bodies, fittings, or other enclosures or outlets.~~

~~*Exception No. 1: Short sections of raceways used to provide support or protection of cable assemblies from physical damage shall not be required to be mechanically continuous.*~~

~~*Exception No. 2: Raceways and cables installed into the bottom of open bottom equipment shall not be required to be mechanically secured to the equipment.*~~

~~**(B)** Limited-Energy and Communications Cables and Conductors Installed in a Raceway.~~

~~Limited-energy and communications cables and conductors installed in a raceway shall be continuous between outlets, boxes, devices, and so forth, unless specifically permitted elsewhere in this code.~~

Statement of Problem and Substantiation for Public Comment

There is no reason for this requirement to exist. If I choose to install a raceway for my doorbell circuit, why would it matter if it was discontinuous?

Related Item

- FCR 238

Submitter Information Verification

Submitter Full Name: Ryan Jackson
Organization: Self-employed
Street Address:
City:
State:
Zip:

Submittal Date: Wed Aug 07 12:33:07 EDT 2024
Committee: NEC-P03

Public Comment No. 1519-NFPA 70-2024 [Section No. 720.14(B)]

(B) Limited-Energy ~~and Communications~~ Cables and Conductors Installed in a Raceway.

Limited-energy ~~and communications~~ cables and conductors installed in a raceway shall be continuous between outlets, boxes, devices, and so forth, unless specifically permitted elsewhere in this code.

Additional Proposed Changes

File Name	Description	Approved
Limited_Energy_Roster-2026_2nd_Draft.pdf	Limited-Energy Task Group Roster-2nd Draft	

Statement of Problem and Substantiation for Public Comment

This public comment is submitted on behalf of the Limited-Energy Task Group (see attached roster) to delete redundant language in section 720.14(B) as the new definition of limited-energy cables proposed by companion PC-1371 includes communications cables. Upon the approval PC-1371 there will be no need for this redundant text.

Related Public Comments for This Document

Related Comment	Relationship
Public Comment No. 1371-NFPA 70-2024 [New Definition after Definition: Cable Joint.]	PC to create new definition for limited-energy cable.

Related Item

- FCR-221

Submitter Information Verification

Submitter Full Name: Kyle Krueger
Organization: NECA
Affiliation: NECA
Street Address:
City:
State:
Zip:

Submittal Date: Fri Aug 23 16:38:46 EDT 2024
Committee: NEC-P03

Limited Energy Task Group [2nd Draft]					
No.	First Name	Last Name	Class.	Organization	Other Committees
1	Kyle	Krueger	[I/M]	NECA	NEC-Correlating Comittee CMP 3 NFPA 72-Correlating Committee
2	Ernie	Gallo	[U/T]	NEBScore	
3	Derrick	Atkins	[L]	Minneapolis Electrical JA	NEC-Correlating Committee CMP 5
4	Anthony	Tassone	[R/T]	UL Solutions	CMP 3 CMP 16
5	Chad	Jones	[M]	Cisco	CMP 3
6	Sam	Rokowski	[I/M]	Maddox Inc.	CMP 3
7	George	Bish	[M]	Amazon/Ring Protect Inc	CMP 16
8	Trevor	Bowmer	[U]	Telecom Consulting	NEC Correlating Committee CMP 16
9	Ronald	Tellas	[M]	CCCA	CMP 3 CMP 16
10	Tim	Mikloiche	[E]	IAEI	CMP 3
11	Ryan	Jackosn	[M]	Steel Tube Industry	CMP 3
12	Diana	Lettkeman	[M]	Dish	CMP 16
13	John	Kacperski	[L]	IBEW	CMP 16

Public Comment No. 350-NFPA 70-2024 [Section No. 720.14(B)]

(B) Limited-Energy ~~and Communications~~ Cables and Conductors Installed in a Raceway.

Limited-energy ~~and communications~~ cables and conductors installed in a raceway shall be continuous between outlets, boxes, devices, and so forth, unless specifically permitted elsewhere in this code.

Statement of Problem and Substantiation for Public Comment

Communications cables are limited-energy cables. It is redundant to refer to “limited-energy and communications cables”; “limited-energy cables” is sufficient.

Related Public Comments for This Document

Related Comment	Relationship
Public Comment No. 127-NFPA 70-2024 [New Section after 722.1]	722.2 Listing of Limited-Energy Cables
Public Comment No. 336-NFPA 70-2024 [Section No. 720.5(B)]	
Public Comment No. 1619-NFPA 70-2024 [Article 720]	

Related Item

- Global FCR-221

Submitter Information Verification

Submitter Full Name: David Kiddoo
Organization: CCCA
Affiliation: Communications Cable & Connectivity Association
Street Address:
City:
State:
Zip:

Submittal Date: Tue Jul 30 10:26:19 EDT 2024
Committee: NEC-P03

Public Comment No. 1521-NFPA 70-2024 [Section No. 720.19]

720.19 Supporting Cables and Conductors in Vertical Raceways.

(A) Spacing Intervals — Maximum.

Limited-energy ~~and communications~~ cables and conductors in vertical raceways shall be supported in accordance with the following:

(1) At least one support method shall be provided for each conductor at the top of the vertical raceway or as close to the top as practical.

(2) Intermediate supports shall be provided as necessary to limit supported conductor lengths to not greater than 30 m (100 ft).

Exception: Steel wire armor cable shall be supported at the top of the riser with a cable support that clamps the steel wire armor. A safety device shall be permitted at the lower end of the riser to hold the cable in the event there is slippage of the cable in the wire-armored cable support. Additional wedge-type supports shall be permitted to relieve the strain on the equipment terminals caused by expansion of the cable under load.

(B) Fire-Resistive Cables and Conductors.

Support methods and spacing intervals for fire-resistive limited-energy ~~and communications~~ cables and conductors shall comply with any restrictions provided in the listing of the electrical circuit protective system or fire-resistive cable system used, and in no case shall the support intervals be lengths greater than 30 m (100 ft).

(C) Support Methods.

One of the following methods of support shall be used:

(1) Clamping devices constructed of or employing insulating wedges inserted in the ends of the raceways. Where clamping of insulation does not adequately support the cable, the conductor also shall be clamped.

(2) Inserting boxes at the required intervals in which insulating supports are installed and secured in an approved manner to withstand the weight of the conductors attached thereto, and the boxes are provided with covers.

(3) In junction boxes, deflecting the cables not less than 90 degrees and carrying them horizontally to a distance not less than twice the diameter of the cable, with the cables being carried on two or more insulating supports and additionally secured thereto by tie wires, if desired. Where this method is used, cables shall be supported at intervals not greater than 6 m (20 ft).

(4) Other approved means.

Additional Proposed Changes

File Name	Description	Approved
Limited_Energy_Roster-2026_2nd_Draft.pdf	Limited-Energy Task Group Roster-2nd Draft	

Statement of Problem and Substantiation for Public Comment

This public comment is submitted on behalf of the Limited-Energy Task Group (see attached roster) to delete redundant language in section 720.19(A)&(B) as the new definition of limited-energy cables proposed by companion PC-1371 includes communications cables. Upon the approval PC-1371 there will be no need for this redundant text.

Related Public Comments for This Document

Related Comment	Relationship
Public Comment No. 1371-NFPA 70-2024 [New Definition after Definition: Cable Joint.]	PC to create new definition of limited-energy cable.

Related Item

- FCR-221

Submitter Information Verification

Submitter Full Name: Kyle Krueger
Organization: NECA
Affiliation: NECA
Street Address:
City:
State:
Zip:

Submittal Date: Fri Aug 23 16:40:24 EDT 2024
Committee: NEC-P03

Limited Energy Task Group [2nd Draft]					
No.	First Name	Last Name	Class.	Organization	Other Committees
1	Kyle	Krueger	[I/M]	NECA	NEC-Correlating Comittee CMP 3 NFPA 72-Correlating Committee
2	Ernie	Gallo	[U/T]	NEBScore	
3	Derrick	Atkins	[L]	Minneapolis Electrical JA	NEC-Correlating Committee CMP 5
4	Anthony	Tassone	[R/T]	UL Solutions	CMP 3 CMP 16
5	Chad	Jones	[M]	Cisco	CMP 3
6	Sam	Rokowski	[I/M]	Maddox Inc.	CMP 3
7	George	Bish	[M]	Amazon/Ring Protect Inc	CMP 16
8	Trevor	Bowmer	[U]	Telecom Consulting	NEC Correlating Committee CMP 16
9	Ronald	Tellas	[M]	CCCA	CMP 3 CMP 16
10	Tim	Mikloiche	[E]	IAEI	CMP 3
11	Ryan	Jackosn	[M]	Steel Tube Industry	CMP 3
12	Diana	Lettkeman	[M]	Dish	CMP 16
13	John	Kacperski	[L]	IBEW	CMP 16

Public Comment No. 351-NFPA 70-2024 [Section No. 720.19(A)]

(A) Spacing Intervals — Maximum.

Limited-energy ~~and communications~~ cables and conductors in vertical raceways shall be supported in accordance with the following:

(1) At least one support method shall be provided for each conductor at the top of the vertical raceway or as close to the top as practical.

(2) Intermediate supports shall be provided as necessary to limit supported conductor lengths to not greater than 30 m (100 ft).

Exception: Steel wire armor cable shall be supported at the top of the riser with a cable support that clamps the steel wire armor. A safety device shall be permitted at the lower end of the riser to hold the cable in the event there is slippage of the cable in the wire-armored cable support. Additional wedge-type supports shall be permitted to relieve the strain on the equipment terminals caused by expansion of the cable under load.

Statement of Problem and Substantiation for Public Comment

Communications cables are limited-energy cables. It is redundant to refer to “limited-energy and communications cables”; “limited-energy cables” is sufficient.

Related Public Comments for This Document

Related Comment	Relationship
Public Comment No. 127-NFPA 70-2024 [New Section after 722.1]	722.2 Listing of Limited-Energy Cables
Public Comment No. 1619-NFPA 70-2024 [Article 720]	

Related Item

- Global FCR-221

Submitter Information Verification

Submitter Full Name: David Kiddoo
Organization: CCCA
Affiliation: Communications Cable & Connectivity Association
Street Address:
City:
State:
Zip:

Submittal Date: Tue Jul 30 10:28:43 EDT 2024
Committee: NEC-P03

Public Comment No. 892-NFPA 70-2024 [Section No. 720.19(A)]

(A) Spacing Intervals — Maximum.

Limited-energy and communications cables and conductors in vertical raceways exceeding 30 m (100 ft) in elevation change shall be supported in accordance with the following:

(1) At least one support method shall be provided for each conductor at the top of the vertical raceway or as close to the top as practical.

(2) Intermediate supports shall be provided as necessary to limit supported conductor lengths to not greater than 30 m (100 ft).

Exception: Steel wire armor cable shall be supported at the top of the riser with a cable support that clamps the steel wire armor. A safety device shall be permitted at the lower end of the riser to hold the cable in the event there is slippage of the cable in the wire-armored cable support. Additional wedge-type supports shall be permitted to relieve the strain on the equipment terminals caused by expansion of the cable under load.

Statement of Problem and Substantiation for Public Comment

As written, I need to support cables in a raceway that is 5' long.

Related Item

- FCR 238

Submitter Information Verification

Submitter Full Name: Ryan Jackson
Organization: Self-employed
Street Address:
City:
State:
Zip:

Submittal Date: Wed Aug 07 12:35:34 EDT 2024
Committee: NEC-P03

Public Comment No. 352-NFPA 70-2024 [Section No. 720.19(B)]

(B) Fire-Resistive Cables and Conductors.

Support methods and spacing intervals for fire-resistive limited-energy ~~and communications~~ cables and conductors shall comply with any restrictions provided in the listing of the electrical circuit protective system or fire-resistive cable system used, and in no case shall the support intervals be lengths greater than 30 m (100 ft).

Statement of Problem and Substantiation for Public Comment

Communications cables are limited-energy cables. It is redundant to refer to “limited-energy and communications cables”; “limited-energy cables” is sufficient.

Related Public Comments for This Document

Related Comment	Relationship
Public Comment No. 127-NFPA 70-2024 [New Section after 722.1]	722.2 Listing of Limited-Energy Cables
Public Comment No. 336-NFPA 70-2024 [Section No. 720.5(B)]	
Public Comment No. 1619-NFPA 70-2024 [Article 720]	

Related Item

- Global FCR-221

Submitter Information Verification

Submitter Full Name: David Kiddoo
Organization: CCCA
Affiliation: Communications Cable & Connectivity Association
Street Address:
City:
State:
Zip:

Submittal Date: Tue Jul 30 10:31:33 EDT 2024
Committee: NEC-P03

Public Comment No. 1522-NFPA 70-2024 [Section No. 720.21]

720.21 Spread of Fire or Products of Combustion.

Limited-energy ~~and communications~~ installations in hollow spaces, vertical shafts, and ventilation or air-handling ducts shall be made so that the possible spread of fire or products of combustion will not be substantially increased. Openings around electrical penetrations into or through fire-resistant-rated walls, partitions, floors, or ceilings shall be firestopped using approved methods to maintain the fire resistance rating.

Informational Note: Directories of electrical construction materials published by qualified testing laboratories contain many listing installation restrictions necessary to maintain the fire-resistive rating of assemblies where penetrations or openings are made. Building codes also contain restrictions on membrane penetrations on opposite sides of a fire-resistance-rated wall assembly. An example is the 600 mm (24 in.) minimum horizontal separation that usually applies between boxes installed on opposite sides of the wall. Assistance in complying with the requirements of 720.21 can be found in building codes, fire resistance directories, and product listings.

Additional Proposed Changes

File Name	Description	Approved
Limited_Energy_Roster-2026_2nd_Draft.pdf	Limited-Energy Task Group Roster-2nd Draft	

Statement of Problem and Substantiation for Public Comment

This public comment is submitted on behalf of the Limited-Energy Task Group (see attached roster) to delete redundant language in section 720.21 as the new definition of limited-energy cables proposed by companion PC-1371 includes communications cables. Upon the approval PC-1371 there will be no need for this redundant text.

Related Public Comments for This Document

Related Comment	Relationship
Public Comment No. 1371-NFPA 70-2024 [New Definition after Definition: Cable Joint.]	PC to create new definition of limited-energy cable.

Related Item

- FCR-221

Submitter Information Verification

Submitter Full Name: Kyle Krueger
Organization: NECA
Affiliation: NECA
Street Address:
City:
State:
Zip:

Submittal Date: Fri Aug 23 16:42:47 EDT 2024
Committee: NEC-P03

Limited Energy Task Group [2nd Draft]					
No.	First Name	Last Name	Class.	Organization	Other Committees
1	Kyle	Krueger	[I/M]	NECA	NEC-Correlating Comittee CMP 3 NFPA 72-Correlating Committee
2	Ernie	Gallo	[U/T]	NEBScore	
3	Derrick	Atkins	[L]	Minneapolis Electrical JA	NEC-Correlating Committee CMP 5
4	Anthony	Tassone	[R/T]	UL Solutions	CMP 3 CMP 16
5	Chad	Jones	[M]	Cisco	CMP 3
6	Sam	Rokowski	[I/M]	Maddox Inc.	CMP 3
7	George	Bish	[M]	Amazon/Ring Protect Inc	CMP 16
8	Trevor	Bowmer	[U]	Telecom Consulting	NEC Correlating Committee CMP 16
9	Ronald	Tellas	[M]	CCCA	CMP 3 CMP 16
10	Tim	Mikloiche	[E]	IAEI	CMP 3
11	Ryan	Jackosn	[M]	Steel Tube Industry	CMP 3
12	Diana	Lettkeman	[M]	Dish	CMP 16
13	John	Kacperski	[L]	IBEW	CMP 16

Public Comment No. 353-NFPA 70-2024 [Section No. 720.21]

720.21 Spread of Fire or Products of Combustion.

Limited-energy ~~and communications~~ cable installations in hollow spaces, vertical shafts, and ventilation or air-handling ducts shall be made so that the possible spread of fire or products of combustion will not be substantially increased. Openings around electrical penetrations into or through fire-resistant-rated walls, partitions, floors, or ceilings shall be firestopped using approved methods to maintain the fire resistance rating.

Informational Note: Directories of electrical construction materials published by qualified testing laboratories contain many listing installation restrictions necessary to maintain the fire-resistive rating of assemblies where penetrations or openings are made. Building codes also contain restrictions on membrane penetrations on opposite sides of a fire-resistance-rated wall assembly. An example is the 600 mm (24 in.) minimum horizontal separation that usually applies between boxes installed on opposite sides of the wall. Assistance in complying with the requirements of 720.21 can be found in building codes, fire resistance directories, and product listings.

Statement of Problem and Substantiation for Public Comment

Communications cables are limited-energy cables. It is redundant to refer to “limited-energy and communications cables”; “limited-energy cables” is sufficient.

Related Public Comments for This Document

Related Comment	Relationship
Public Comment No. 127-NFPA 70-2024 [New Section after 722.1]	722.2 Listing of Limited-Energy Cables
Public Comment No. 336-NFPA 70-2024 [Section No. 720.5(B)]	
Public Comment No. 1619-NFPA 70-2024 [Article 720]	

Related Item

- Global FCR-221

Submitter Information Verification

Submitter Full Name: David Kiddoo
Organization: CCCA
Affiliation: Communications Cable & Connectivity Association
Street Address:
City:
State:
Zip:

Submittal Date: Tue Jul 30 11:08:18 EDT 2024
Committee: NEC-P03

Public Comment No. 1524-NFPA 70-2024 [Section No. 720.22]

720.22 Wiring in Ducts Not Used for Air Handling, Fabricated Ducts for Environmental Air, and Other Spaces for Environmental Air (Plenums).

The requirements of this section shall apply to the installation of limited-energy ~~, communications, coaxial-type CATV, conductive optical fiber-type OF conductors,~~ cables, and equipment in ducts used for dust, loose stock, or vapor removal, ducts specifically fabricated for environmental air, and other spaces used for environmental air (plenums).

Informational Note: See Article 424, Part VI for requirements on duct heaters.

(A) Ducts for Dust, Loose Stock, or Vapor Removal.

No limited-~~energy or communications wiring systems~~ energy systems of any type shall be installed in ducts used to transport dust, loose stock, or flammable vapors. No wiring system of any type shall be installed in any duct, or shaft containing only such ducts, used for vapor removal or for ventilation of commercial-type cooking equipment.

Exception: Nonconductive fiber optical cables shall be permitted in ducts used for dust, loose stock, or vapor removal.

(B) Ducts Specifically Fabricated for Environmental Air.

Limited-energy ~~and communications~~ equipment, devices, and the wiring methods specified in this section shall be permitted within such ducts only if necessary for the direct action upon, or sensing of, the contained air. Where equipment or devices are installed and illumination is necessary to facilitate maintenance and repair, enclosed gasketed-type luminaires shall be permitted.

Only wiring methods consisting of Type MI cable without an overall nonmetallic covering, Type MC cable employing a smooth or corrugated impervious metal sheath without an overall nonmetallic covering, electrical metallic tubing, flexible metallic tubing, intermediate metal conduit, or rigid metal conduit without an overall nonmetallic covering shall be installed in ducts specifically fabricated to transport environmental air. Flexible metal conduit shall be permitted, in lengths not to exceed 1.2 m (4 ft), to connect physically adjustable equipment and devices permitted to be in these fabricated ducts. The connectors used with flexible metal conduit shall effectively close any openings in the connection.

Exception: Wiring methods and cabling systems, listed for use in other spaces used for environmental air (plenums), shall be permitted to be installed in ducts specifically fabricated for environmental air-handling purposes under both of the following conditions:

(1) The wiring methods or cabling systems shall be permitted only if necessary to connect to equipment or devices associated with the direct action upon or sensing of the contained air.

(2) The total length of such wiring methods or cabling systems shall not exceed 1.2 m (4 ft).

(C) Other Spaces Used for Environmental Air (Plenums).

This section shall apply to spaces not specifically fabricated for environmental air-handling purposes but used for air-handling purposes as a plenum. This section shall not apply to habitable rooms or areas of buildings, the prime purpose of which is not air handling.

Informational Note No. 1: The space over a hung ceiling used for environmental air-handling purposes is an example of the type of other space to which this section applies.

Informational Note No. 2: See NFPA 90A-2024, *Standard for the Installation of Air-Conditioning and Ventilating Systems*, and other mechanical codes for information on how the term *other spaces used for environmental air (plenum)*, as used in this section, correlates with the use of the term plenum where the plenum is used for return air purposes, as well as some other air-handling spaces.

Informational Note No. 3: Paint, plaster, cleaners, abrasives, corrosive residues, or other contaminants may result in an undetermined alteration of wire and cable properties.

Exception: This section shall not apply to the joist or stud spaces of dwelling units where the wiring passes through such spaces perpendicular to the long dimension of such spaces.

(1) Wiring Methods.

The limited-energy ~~and communications~~ cables used in other spaces used for environmental air shall be limited to those cables specifically listed for use within an air-handling space or listed prefabricated cable assemblies of metallic manufactured wiring systems without nonmetallic sheath. Other types of cables, conductors, and raceways shall be permitted to be installed in electrical metallic tubing, flexible metallic tubing, intermediate metal conduit, rigid metal conduit without an overall nonmetallic covering, flexible metal conduit, or, where accessible, surface metal raceway or metal wireway with metal covers.

Informational Note: See UL 2043, *Fire Test for Heat and Visible Smoke Release for Discrete Products and Their Accessories Installed in Air-Handling Spaces*, for one method of testing low smoke and heat release properties for nonmetallic cable ties and other nonmetallic cable accessories to determine a maximum peak optical density of 0.50 or less, an average optical density of 0.15 or less, and a peak heat release rate of 100 kW or less.

(2) Cable Tray Systems.

The requirements in 720.22(C)(2)(a) or 720.22(C)(2)(b) shall apply to the use of metallic cable tray systems in other spaces used for environmental air (plenums), where accessible.

(a) *Metal Cable Tray Systems.* Metal cable tray systems shall be permitted to support the wiring methods specified in 720.22(C)(1).

(b) *Solid Side and Bottom Metal Cable Tray Systems.* Solid side and bottom metal cable tray systems with solid metal covers shall be permitted to enclose wiring methods and cables not already covered in 720.22(C)(1) in accordance with 392.10(A) and 392.10(B).

(3) Equipment.

Electrical equipment with a metal enclosure, or electrical equipment with a nonmetallic enclosure listed for use within an air-handling space and having low smoke and heat release properties, and associated wiring material suitable for the ambient temperature shall be permitted to be installed in such other spaces unless prohibited elsewhere in this code.

Informational Note No. 1: See UL 2043, *Fire Test for Heat and Visible Smoke Release for Discrete Products and Their Accessories Installed in Air-Handling Spaces*, for one method of testing low smoke and heat release properties to determine that the equipment exhibits a maximum peak optical density of 0.50 or less, an average optical density of 0.15 or less, and a peak heat release rate of 100 kW or less.

Informational Note No. 2: See NFPA 90A-2024, *Standard for the Installation of Air Conditioning and Ventilating Systems*, for information on listing discrete products as having low smoke and hear release properties.

Exception: Integral fan systems shall be permitted where specifically identified for use within an air-handling space.

Additional Proposed Changes

File Name	Description	Approved

Limited_Energy_Roster-2026_2nd_Draft.pdf Limited-Energy Task Group Roster-2nd Draft

Statement of Problem and Substantiation for Public Comment

This public comment is submitted on behalf of the Limited-Energy Task Group (see attached roster) to delete redundant language in section 720.22(A)-(C)1 as the new definition of limited-energy cables proposed by companion PC-1371 includes communications cables. Upon the approval PC-1371 there will be no need for this redundant text.

Related Public Comments for This Document

Related Comment	Relationship
Public Comment No. 1371-NFPA 70-2024 [New Definition after Definition: Cable Joint.]	PC to create new definition of limited-energy cable.

Related Item

- FCR-221

Submitter Information Verification

Submitter Full Name: Kyle Krueger
Organization: NECA
Affiliation: NECA
Street Address:
City:
State:
Zip:

Submittal Date: Fri Aug 23 16:44:48 EDT 2024
Committee: NEC-P03

Limited Energy Task Group [2nd Draft]					
No.	First Name	Last Name	Class.	Organization	Other Committees
1	Kyle	Krueger	[I/M]	NECA	NEC-Correlating Comittee CMP 3 NFPA 72-Correlating Committee
2	Ernie	Gallo	[U/T]	NEBScore	
3	Derrick	Atkins	[L]	Minneapolis Electrical JA	NEC-Correlating Committee CMP 5
4	Anthony	Tassone	[R/T]	UL Solutions	CMP 3 CMP 16
5	Chad	Jones	[M]	Cisco	CMP 3
6	Sam	Rokowski	[I/M]	Maddox Inc.	CMP 3
7	George	Bish	[M]	Amazon/Ring Protect Inc	CMP 16
8	Trevor	Bowmer	[U]	Telecom Consulting	NEC Correlating Committee CMP 16
9	Ronald	Tellas	[M]	CCCA	CMP 3 CMP 16
10	Tim	Mikloiche	[E]	IAEI	CMP 3
11	Ryan	Jackosn	[M]	Steel Tube Industry	CMP 3
12	Diana	Lettkeman	[M]	Dish	CMP 16
13	John	Kacperski	[L]	IBEW	CMP 16

Public Comment No. 355-NFPA 70-2024 [Section No. 720.22(A)]

(A) Ducts for Dust, Loose Stock, or Vapor Removal.

No limited-energy ~~or communications~~ wiring systems of any type shall be installed in ducts used to transport dust, loose stock, or flammable vapors. No wiring system of any type shall be installed in any duct, or shaft containing only such ducts, used for vapor removal or for ventilation of commercial-type cooking equipment.

Exception: Nonconductive fiber optical cables shall be permitted in ducts used for dust, loose stock, or vapor removal.

Statement of Problem and Substantiation for Public Comment

Communications cables are limited-energy cables. It is redundant to refer to “limited-energy and communications cables”; “limited-energy cables” is sufficient.

Related Public Comments for This Document

Related Comment	Relationship
Public Comment No. 127-NFPA 70-2024 [New Section after 722.1]	722.2 Listing of Limited-Energy Cables
Public Comment No. 336-NFPA 70-2024 [Section No. 720.5(B)]	
Public Comment No. 1619-NFPA 70-2024 [Article 720]	

Related Item

- Global FCR-221

Submitter Information Verification

Submitter Full Name: David Kiddoo
Organization: CCCA
Affiliation: Communications Cable & Connectivity Association
Street Address:
City:
State:
Zip:

Submittal Date: Tue Jul 30 11:17:29 EDT 2024
Committee: NEC-P03

Public Comment No. 894-NFPA 70-2024 [Section No. 720.22(A)]

(A) Ducts for Dust, Loose Stock, or Vapor Removal.

No limited-energy or communications wiring systems of any type shall be installed in ducts used to transport dust, loose stock, or flammable vapors. No wiring system of any type shall be installed in any duct, or shaft containing only such ducts, used for vapor removal or for ventilation of commercial-type cooking equipment.

~~*Exception: Nonconductive fiber optical cables shall be permitted in ducts used for dust, loose stock, or vapor removal.*~~

Statement of Problem and Substantiation for Public Comment

This allowance was intentionally removed in the first draft as part of FR 8610 after discussion as part of the CMP meetings. The conductivity of a cable should not matter when it comes to installation in a duct that is removing dust, vapors, and similar materials. There was no limit on the amount of such cables, and the duct could have been stuffed with enough cables that it could no longer function, creating a serious fire hazard.

Related Item

- FCR 221

Submitter Information Verification

Submitter Full Name: Ryan Jackson
Organization: Self-employed
Street Address:
City:
State:
Zip:

Submittal Date: Wed Aug 07 12:44:58 EDT 2024
Committee: NEC-P03

Public Comment No. 356-NFPA 70-2024 [Section No. 720.22(B)]

(B) Ducts Specifically Fabricated for Environmental Air.

Limited-energy ~~and communications~~ equipment, devices, and the wiring methods specified in this section shall be permitted within such ducts only if necessary for the direct action upon, or sensing of, the contained air. Where equipment or devices are installed and illumination is necessary to facilitate maintenance and repair, enclosed gasketed-type luminaires shall be permitted.

Only wiring methods consisting of Type MI cable without an overall nonmetallic covering, Type MC cable employing a smooth or corrugated impervious metal sheath without an overall nonmetallic covering, electrical metallic tubing, flexible metallic tubing, intermediate metal conduit, or rigid metal conduit without an overall nonmetallic covering shall be installed in ducts specifically fabricated to transport environmental air. Flexible metal conduit shall be permitted, in lengths not to exceed 1.2 m (4 ft), to connect physically adjustable equipment and devices permitted to be in these fabricated ducts. The connectors used with flexible metal conduit shall effectively close any openings in the connection.

Exception: Wiring methods and cabling systems, listed for use in other spaces used for environmental air (plenums), shall be permitted to be installed in ducts specifically fabricated for environmental air-handling purposes under both of the following conditions:

(1) The wiring methods or cabling systems shall be permitted only if necessary to connect to equipment or devices associated with the direct action upon or sensing of the contained air.

(2) The total length of such wiring methods or cabling systems shall not exceed 1.2 m (4 ft).

Statement of Problem and Substantiation for Public Comment

Communications cables are limited-energy cables. It is redundant to refer to “limited-energy and communications cables”; “limited-energy cables” is sufficient.

Related Public Comments for This Document

Related Comment	Relationship
Public Comment No. 127-NFPA 70-2024 [New Section after 722.1]	722.2 Listing of Limited-Energy Cables
Public Comment No. 336-NFPA 70-2024 [Section No. 720.5(B)]	
Public Comment No. 1619-NFPA 70-2024 [Article 720]	

Related Item

- Global FCR-221

Submitter Information Verification

Submitter Full Name: David Kiddoo
Organization: CCCA
Affiliation: Communications Cable & Connectivity Association
Street Address:
City:
State:
Zip:

Submittal Date: Tue Jul 30 11:21:10 EDT 2024
Committee: NEC-P03

Public Comment No. 1479-NFPA 70-2024 [Section No. 720.22(C)]

(C) Other Spaces Used for Environmental Air (Plenums).

This section shall apply to spaces not specifically fabricated for environmental air-handling purposes but used for air-handling purposes as a plenum. This section shall not apply to habitable rooms or areas of buildings, the prime purpose of which is not air handling.

Informational Note No. 1: The space over a hung ceiling used for environmental air-handling purposes is an example of the type of other space to which this section applies.

Informational Note No. 2: See NFPA 90A-2024, *Standard for the Installation of Air-Conditioning and Ventilating Systems*, and other mechanical codes for information on how the term *other spaces used for environmental air (plenum)*, as used in this section, correlates with the use of the term plenum where the plenum is used for return air purposes, as well as some other air-handling spaces.

Informational Note No. 3: Paint, plaster, cleaners, abrasives, corrosive residues, or other contaminants may result in an undetermined alteration of wire and cable properties.

Exception: This section shall not apply to the joist or stud spaces of dwelling units where the wiring passes through such spaces perpendicular to the long dimension of such spaces.

(1) Wiring Methods.

The limited-energy and communications cables used in other spaces used for environmental air shall be limited to those cables specifically listed for use within an air-handling space or listed prefabricated cable assemblies of metallic manufactured wiring systems without nonmetallic sheath. Other types of cables, conductors, and raceways shall be permitted to be installed in electrical metallic tubing, flexible metallic tubing, intermediate metal conduit, rigid metal conduit without an overall nonmetallic covering, flexible metal conduit, or, where accessible, surface metal raceway or metal wireway with metal covers.

Informational Note: See UL 2043, *Fire Test for Heat and Visible Smoke Release for Discrete Products and Their Accessories Installed in Air-Handling Spaces*, for one method of testing low smoke and heat release properties for nonmetallic cable ties and other nonmetallic cable accessories to determine a maximum peak optical density of 0.50 or less, an average optical density of 0.15 or less, and a peak heat release rate of 100 kW or less.

(2) Cable Tray Systems.

The requirements in 720.22(C)(2)(a) or 720.22(C)(2)(b) shall apply to the use of metallic cable tray systems in other spaces used for environmental air (plenums), where accessible.

(a) *Metal Cable Tray Systems.* Metal cable tray systems shall be permitted to support the wiring methods specified in 720.22(C)(1).

(b) *Solid Side and Bottom Metal Cable Tray Systems.* Solid side and bottom metal cable tray systems with solid metal covers shall be permitted to enclose wiring methods and cables not already covered in 720.22(C)(1) in accordance with 392.10(A) and 392.10(B).

(3) Equipment.

Electrical equipment with a metal enclosure, or electrical equipment with a nonmetallic enclosure listed for use within an air-handling space and having low smoke and heat release properties, and associated wiring material suitable for the ambient temperature shall be permitted to be installed in such other spaces unless prohibited elsewhere in this code.

Informational Note No. 1: See UL 2043, *Fire Test for Heat and Visible Smoke Release for Discrete Products and Their Accessories Installed in Air-Handling Spaces*, for one method of testing low smoke and heat release properties to determine that the equipment exhibits a maximum peak optical density of 0.50 or less, an average optical density of 0.15 or less, and a peak heat release rate of 100 kW or less.

Informational Note No. 2: See NFPA 90A-2024, *Standard for the Installation of Air Conditioning and Ventilating Systems*, for information on listing discrete products as having low smoke and hear release properties.

Exception: Integral fan systems shall be permitted where specifically identified for use within an air-handling space.

(4) Plenum Cable Ties. *Cable ties intended for use in other space used for environmental air (plenums) shall be listed as having low smoke and heat release properties.*

Informational Note No. 1: See UL 2043, Fire Test for Heat and Visible Smoke Release for Discrete Products and Their Accessories Installed in Air-Handling Spaces, for one method of testing low smoke and heat release properties to determine that the equipment exhibits a maximum peak optical density of 0.50 or less, an average optical density of 0.15 or less, and a peak heat release rate of 100 kW or less.

Informational Note No. 2: See NFPA 90A-2024, Standard for the Installation of Air Conditioning and Ventilating Systems, for information on listing discrete products as having low smoke and hear release properties.

Statement of Problem and Substantiation for Public Comment

Section 800.170 Plenum Cable Ties was deleted from the 2023 with the intention of moving it to this section. It appears that it was inadvertently dropped. The PC restores 800.170 to its new place in Article 720.

Related Public Comments for This Document

Related Comment	Relationship
Public Comment No. 1619-NFPA 70-2024 [Article 720]	

Related Item

• Global FCR-221 • FCR-233

Submitter Information Verification

Submitter Full Name: David Kiddoo
Organization: CCCA
Affiliation: Communications Cable & Connectivity Association
Street Address:
City:
State:

Zip:
Submittal Date: Fri Aug 23 13:42:44 EDT 2024
Committee: NEC-P03

Public Comment No. 636-NFPA 70-2024 [Section No. 720.22(C)]

(C) Other Spaces Used for Environmental Air (Plenums).

This section shall apply to spaces not specifically fabricated for environmental air-handling purposes but used for air-handling purposes as a plenum. This section shall not apply to habitable rooms or areas of buildings, the prime purpose of which is not air handling.

Informational Note No. 1: The space over a hung ceiling used for environmental air-handling purposes is an example of the type of other space to which this section applies.

Informational Note No. 2: See NFPA 90A-2024, *Standard for the Installation of Air-Conditioning and Ventilating Systems*, and other mechanical codes for information on how the term *other spaces used for environmental air (plenum)*, as used in this section, correlates with the use of the term plenum where the plenum is used for return air purposes, as well as some other air-handling spaces.

Informational Note No. 3: Paint, plaster, cleaners, abrasives, corrosive residues, or other contaminants may result in an undetermined alteration of wire and cable properties.

Exception: This section shall not apply to the joist or stud spaces of dwelling units where the wiring passes through such spaces perpendicular to the long dimension of such spaces.

(1) Wiring Methods.

The limited-energy and communications cables used in other spaces used for environmental air shall be limited to those cables specifically listed for use within an air-handling space or listed prefabricated cable assemblies of metallic manufactured wiring systems without nonmetallic sheath. Other types of cables, conductors, and raceways shall be permitted to be installed in electrical metallic tubing, flexible metallic tubing, intermediate metal conduit, rigid metal conduit without an overall nonmetallic covering, flexible metal conduit, or, where accessible, surface metal raceway or metal wireway with metal covers.

Informational Note: See UL 2043, *Fire Test for Heat and Visible Smoke Release for Discrete Products and Their Accessories Installed in Air-Handling Spaces*, for one method of testing low smoke and heat release properties for nonmetallic cable ties and other nonmetallic cable accessories to determine a maximum peak optical density of 0.50 or less, an average optical density of 0.15 or less, and a peak heat release rate of 100 kW or less.

(2) Cable Tray Systems.

The requirements in 720.22(C)(2)(a) or 720.22(C)(2)(b) shall apply to the use of metallic cable tray systems in other spaces used for environmental air (plenums), where accessible.

(a) *Metal Cable Tray Systems.* Metal cable tray systems shall be permitted to support the wiring methods specified in 720.22(C)(1).

(b) *Solid Side and Bottom Metal Cable Tray Systems.* Solid side and bottom metal cable tray systems with solid metal covers shall be permitted to enclose wiring methods and cables not already covered in 720.22(C)(1) in accordance with 392.10(A) and 392.10(B).

(3) Equipment.

Electrical equipment with a metal enclosure, or electrical equipment with a nonmetallic enclosure listed for use within an air-handling space and having low smoke and heat release properties, and associated wiring material suitable for the ambient temperature shall be permitted to be installed in such other spaces unless prohibited elsewhere in this code.

Informational Note No. 1: See UL 2043, *Fire Test for Heat and Visible Smoke Release for Discrete Products and Their Accessories Installed in Air-Handling Spaces*, for one method of testing low smoke and heat release properties to determine that the equipment exhibits a maximum peak optical density of 0.50 or less, an average optical density of 0.15 or less, and a peak heat release rate of 100 kW or less.

Informational Note No. 2: See NFPA 90A-2024, *Standard for the Installation of Air Conditioning and Ventilating Systems*, for information on listing discrete products as having low smoke and hear release properties.

Exception: Integral fan systems shall be permitted where specifically identified for use within an air-handling space.

(4) Plenum Cable Ties.

Cable ties intended for use in other space used for environmental air (plenums) shall be listed as having low smoke and heat release properties.

Informational Note No. 1: See UL 2043, Fire Test for Heat and Visible Smoke Release for Discrete Products and Their Accessories Installed in Air-Handling Spaces , for one method of testing low smoke and heat release properties to determine that the equipment exhibits a maximum peak optical density of 0.50 or less, an average optical density of 0.15 or less, and a peak heat release rate of 100 kW or less.

Informational Note No. 2: See NFPA 90A-2024, Standard for the Installation of Air Conditioning and Ventilating Systems , for information on listing discrete products as having low smoke and hear release properties.

Statement of Problem and Substantiation for Public Comment

Section 800.170 Plenum Cable Ties was deleted from the 2023 with the intention of moving it to this section. It appears that it was inadvertently dropped. The PC restores 800.170 to its new place in Article 720.

Related Item

• Global FCR-221 • FCR-233

Submitter Information Verification

Submitter Full Name: Stanley Kaufman
Organization: CableSafe, Inc./OFS
Affiliation: Plastics Industry Association (PLASTICS)
Street Address:
City:
State:
Zip:

Submittal Date: Fri Aug 02 03:00:41 EDT 2024
Committee: NEC-P03

Public Comment No. 357-NFPA 70-2024 [Section No. 720.22(C)(1)]

(1) Wiring Methods.

The limited-energy ~~and communications~~ cables used in other spaces used for environmental air shall be limited to those cables specifically listed for use within an air-handling space or listed prefabricated cable assemblies of metallic manufactured wiring systems without nonmetallic sheath. Other types of cables, conductors, and raceways shall be permitted to be installed in electrical metallic tubing, flexible metallic tubing, intermediate metal conduit, rigid metal conduit without an overall nonmetallic covering, flexible metal conduit, or, where accessible, surface metal raceway or metal wireway with metal covers.

Informational Note: See UL 2043, *Fire Test for Heat and Visible Smoke Release for Discrete Products and Their Accessories Installed in Air-Handling Spaces*, for one method of testing low smoke and heat release properties for nonmetallic cable ties and other nonmetallic cable accessories to determine a maximum peak optical density of 0.50 or less, an average optical density of 0.15 or less, and a peak heat release rate of 100 kW or less.

Statement of Problem and Substantiation for Public Comment

Communications cables are limited-energy cables. It is redundant to refer to “limited-energy and communications cables”; “limited-energy cables” is sufficient.

Related Public Comments for This Document

Related Comment	Relationship
Public Comment No. 127-NFPA 70-2024 [New Section after 722.1]	722.2 Listing of Limited-Energy Cables
Public Comment No. 336-NFPA 70-2024 [Section No. 720.5(B)]	
Public Comment No. 1619-NFPA 70-2024 [Article 720]	

Related Item

- Global FCR-221

Submitter Information Verification

Submitter Full Name: David Kiddoo
Organization: CCCA
Affiliation: Communications Cable & Connectivity Association
Street Address:
City:
State:
Zip:

Submittal Date: Tue Jul 30 11:24:41 EDT 2024
Committee: NEC-P03

Public Comment No. 1303-NFPA 70-2024 [Section No. 720.22(C) [Excluding any Sub-Sections]]

This section shall apply to spaces not specifically fabricated for environmental air-handling purposes but used for air-handling purposes as a plenum. This section shall not apply to habitable rooms or areas of buildings, the prime purpose of which is not air handling.

Informational Note No. 1: The space over a hung ceiling used for environmental air-handling purposes is an example of the type of other space to which this section applies.

Informational Note No. 2: See NFPA 90A-2024, *Standard for the Installation of Air-Conditioning and Ventilating Systems*, and other mechanical codes for information on how the term *other spaces used for environmental air (plenum)*, as used in this section, correlates with the use of the term plenum where the plenum is used for return air purposes, as well as some other air-handling spaces.

Informational Note No. 3: Paint, plaster, cleaners, abrasives, corrosive residues, or other contaminants may result in an undetermined alteration of wire and cable properties.

Informational Note No. 4: See NFPA 262-2023, *Standard Method of Test for Flame Travel and Smoke of Wires and Cables for Use in Air-Handling Spaces* , for the test method used to determine that a cable is low-smoke producing and fire resistant, exhibiting a maximum peak optical density of 0.50 or less, an average optical density of 0.15 or less, and a maximum flame spread distance of 1.52 m (5 ft) or less.

Exception: This section shall not apply to the joist or stud spaces of dwelling units where the wiring passes through such spaces perpendicular to the long dimension of such spaces.

Additional Proposed Changes

File Name	Description	Approved
Limited_Energy_Roster-2026_2nd_Draft.pdf	Limited-Energy Task Group Roster-2nd Draft	

Statement of Problem and Substantiation for Public Comment

This public comment is submitted on behalf of the Limited-Energy Task Group (see attached roster) to add this informational note to 720.22(C) for guidance on the testing standard for cables this specific application. Other companion PCs (PC-931 & PC-924) have been submitted to modify the listing requirements in Article 722 as part of that revision it becomes logical to add this informational note in section 720.22(C).

Related Public Comments for This Document

Related Comment	Relationship
Public Comment No. 924-NFPA 70-2024 [New Section after 722.1]	New Listing Requirement for LE Cables
Public Comment No. 924-NFPA 70-2024 [New Section after 722.1]	
Public Comment No. 931-NFPA 70-2024 [Section No. 722.100(A)(1)]	

Related Item

- FCR-221

Submitter Information Verification

Submitter Full Name: Kyle Krueger
Organization: NECA
Affiliation: NECA
Street Address:
City:
State:
Zip:

Submittal Date: Tue Aug 20 13:10:50 EDT 2024
Committee: NEC-P03

Limited Energy Task Group [2nd Draft]					
No.	First Name	Last Name	Class.	Organization	Other Committees
1	Kyle	Krueger	[I/M]	NECA	NEC-Correlating Comittee CMP 3 NFPA 72-Correlating Committee
2	Ernie	Gallo	[U/T]	NEBScore	
3	Derrick	Atkins	[L]	Minneapolis Electrical JA	NEC-Correlating Committee CMP 5
4	Anthony	Tassone	[R/T]	UL Solutions	CMP 3 CMP 16
5	Chad	Jones	[M]	Cisco	CMP 3
6	Sam	Rokowski	[I/M]	Maddox Inc.	CMP 3
7	George	Bish	[M]	Amazon/Ring Protect Inc	CMP 16
8	Trevor	Bowmer	[U]	Telecom Consulting	NEC Correlating Committee CMP 16
9	Ronald	Tellas	[M]	CCCA	CMP 3 CMP 16
10	Tim	Mikloiche	[E]	IAEI	CMP 3
11	Ryan	Jackosn	[M]	Steel Tube Industry	CMP 3
12	Diana	Lettkeman	[M]	Dish	CMP 16
13	John	Kacperski	[L]	IBEW	CMP 16

Public Comment No. 895-NFPA 70-2024 [Section No. 720.22(C) [Excluding any Sub-Sections]]

~~This section shall~~ The following shall apply to spaces not specifically fabricated for environmental air-handling purposes but used for air-handling purposes as a plenum. This section shall not apply to habitable rooms or areas of buildings, the prime purpose of which is not air handling.

Informational Note No. 1: The space over a hung ceiling used for environmental air-handling purposes is an example of the type of other space to which this section applies.

Informational Note No. 2: See NFPA 90A-2024, *Standard for the Installation of Air-Conditioning and Ventilating Systems*, and other mechanical codes for information on how the term *other spaces used for environmental air (plenum)*, as used in this section, correlates with the use of the term plenum where the plenum is used for return air purposes, as well as some other air-handling spaces.

Informational Note No. 3: Paint, plaster, cleaners, abrasives, corrosive residues, or other contaminants may result in an undetermined alteration of wire and cable properties.

Exception: ~~This section~~ These requirements shall not apply to the joist or stud spaces of dwelling units where the wiring passes through such spaces perpendicular to the long dimension of such spaces.

Statement of Problem and Substantiation for Public Comment

The section is the entire section [720.22], not the first level subdivision [720.22(C)].

Related Item

- FCR 221

Submitter Information Verification

Submitter Full Name: Ryan Jackson
Organization: Self-employed
Street Address:
City:
State:
Zip:

Submittal Date: Wed Aug 07 12:49:02 EDT 2024
Committee: NEC-P03

Public Comment No. 354-NFPA 70-2024 [Section No. 720.22 [Excluding any Sub-Sections]]

The requirements of this section shall apply to the installation of limited-energy ~~, communications, coaxial-type CATV, conductive optical fiber-type OF conductors,~~ cables, and equipment in ducts used for dust, loose stock, or vapor removal, ducts specifically fabricated for environmental air, and other spaces used for environmental air (plenums).

Informational Note: See Article 424, Part VI for requirements on duct heaters.

Statement of Problem and Substantiation for Public Comment

This Article deals with limited energy cables. It isn't necessary to mention all the individual cables.

Related Public Comments for This Document

Related Comment	Relationship
Public Comment No. 127-NFPA 70-2024 [New Section after 722.1]	722.2 Listing of Limited-Energy Cables
Public Comment No. 1619-NFPA 70-2024 [Article 720]	

Related Item

- Global FCR-221

Submitter Information Verification

Submitter Full Name: David Kiddoo
Organization: CCCA
Affiliation: Communications Cable & Connectivity Association
Street Address:
City:
State:
Zip:

Submittal Date: Tue Jul 30 11:12:59 EDT 2024
Committee: NEC-P03

Public Comment No. 893-NFPA 70-2024 [Section No. 720.22 [Excluding any Sub-Sections]]

The ~~requirements of this section shall apply to the~~ installation of limited-energy, communications, coaxial-type CATV, conductive optical fiber-type OF conductors, cables, and equipment in ducts used for dust, loose stock, or vapor removal, ducts specifically fabricated for environmental air, and other spaces used for environmental air (plenums) shall comply with the following .

Informational Note: See Article 424, Part VI for requirements on duct heaters.

Statement of Problem and Substantiation for Public Comment

Indicating "the requirements of this section" is no different than saying "the provisions of this section," which is a violation of the Style Manual. In fact, saying "the requirements of..." is worse becasue it removes the permissions and only addresses the requirements. The provisions would be better language, but neither is needed. This comment seeks to remove unnecessary words.

Related Item

- FCR 238

Submitter Information Verification

Submitter Full Name: Ryan Jackson
Organization: Self-employed
Street Address:
City:
State:
Zip:

Submittal Date: Wed Aug 07 12:38:53 EDT 2024
Committee: NEC-P03

Public Comment No. 897-NFPA 70-2024 [Section No. 720.24]

720.24 Bends.

Where a single run is made up of one or more circular raceway type wiring methods, maximum degrees of bends shall not exceed 360 between pull points .

Statement of Problem and Substantiation for Public Comment

As written, there is no solution to the problem. If I violate this section, adding a pull point should remove the issue. Also, this needs to apply only to circular raceways, not wireways, strut channels, and other noncircular raceways. See public comment number (ironically) 360.

Related Public Comments for This Document

Related Comment	Relationship
Public Comment No. 360-NFPA 70-2024 [Section No. 300.24]	

Related Item

- FCR 221

Submitter Information Verification

Submitter Full Name: Ryan Jackson
Organization: Self-employed
Street Address:
City:
State:
Zip:

Submittal Date: Wed Aug 07 12:51:59 EDT 2024
Committee: NEC-P03

Public Comment No. 1525-NFPA 70-2024 [Section No. 720.27]

720.27 Temperature Limitations of Limited-Energy Conductors and Cables.

Limited-~~energy~~ energy cables and ~~communications cables and~~ conductors shall be installed in accordance with 722.27 for temperature limitations.

Additional Proposed Changes

File Name	Description	Approved
Limited_Energy_Roster-2026_2nd_Draft.pdf	Limited-Energy Task Group Roster-2nd Draft	

Statement of Problem and Substantiation for Public Comment

This public comment is submitted on behalf of the Limited-Energy Task Group (see attached roster) to delete redundant language in section 720.27 as the new definition of limited-energy cables proposed by companion PC-1371 includes communications cables. Upon the approval PC-1371 there will be no need for this redundant text.

Related Public Comments for This Document

Related Comment	Relationship
Public Comment No. 1371-NFPA 70-2024 [New Definition after Definition: Cable Joint.]	PC to create new definition of limited-energy cable.

Related Item

- FCR-221

Submitter Information Verification

Submitter Full Name: Kyle Krueger
Organization: NECA
Affiliation: NECA
Street Address:
City:
State:
Zip:

Submittal Date: Fri Aug 23 16:47:30 EDT 2024
Committee: NEC-P03

Limited Energy Task Group [2nd Draft]					
No.	First Name	Last Name	Class.	Organization	Other Committees
1	Kyle	Krueger	[I/M]	NECA	NEC-Correlating Comittee CMP 3 NFPA 72-Correlating Committee
2	Ernie	Gallo	[U/T]	NEBScore	
3	Derrick	Atkins	[L]	Minneapolis Electrical JA	NEC-Correlating Committee CMP 5
4	Anthony	Tassone	[R/T]	UL Solutions	CMP 3 CMP 16
5	Chad	Jones	[M]	Cisco	CMP 3
6	Sam	Rokowski	[I/M]	Maddox Inc.	CMP 3
7	George	Bish	[M]	Amazon/Ring Protect Inc	CMP 16
8	Trevor	Bowmer	[U]	Telecom Consulting	NEC Correlating Committee CMP 16
9	Ronald	Tellas	[M]	CCCA	CMP 3 CMP 16
10	Tim	Mikloiche	[E]	IAEI	CMP 3
11	Ryan	Jackosn	[M]	Steel Tube Industry	CMP 3
12	Diana	Lettkeman	[M]	Dish	CMP 16
13	John	Kacperski	[L]	IBEW	CMP 16

Public Comment No. 358-NFPA 70-2024 [Section No. 720.27]

~~**720.27** Temperature Limitations of Limited-Energy Conductors and Cables.~~

~~Limited-energy and communications cables and conductors shall be installed in accordance with 722.27 for temperature limitations.~~

Statement of Problem and Substantiation for Public Comment

This section is redundant. There is no need to refer to 722.27 since it applies already. This section is not needed, therefore it should be deleted.

Related Public Comments for This Document

Related Comment	Relationship
Public Comment No. 1619-NFPA 70-2024 [Article 720]	

Related Item

- Global FCR-221

Submitter Information Verification

Submitter Full Name: David Kiddoo
Organization: CCCA
Affiliation: Communications Cable & Connectivity Association
Street Address:
City:
State:
Zip:

Submittal Date: Tue Jul 30 11:28:35 EDT 2024
Committee: NEC-P03

Public Comment No. 907-NFPA 70-2024 [Section No. 720.27]

~~**720.27** Temperature Limitations of Limited-Energy Conductors and Cables.~~

~~Limited-energy and communications cables and conductors shall be installed in accordance with 722.27 for temperature limitations.~~

Statement of Problem and Substantiation for Public Comment

As clearly indicated in the text, this issue is covered in 722.27. That section is not optional, so there is no reason to repeat it here. One of these sections needs to be deleted, and it seems that this is the better section to remove.

Related Item

- FCR 221

Submitter Information Verification

Submitter Full Name: Ryan Jackson
Organization: Self-employed
Street Address:
City:
State:
Zip:

Submittal Date: Wed Aug 07 14:11:10 EDT 2024
Committee: NEC-P03

Public Comment No. 1527-NFPA 70-2024 [Section No. 720.30]

720.30 Securing and Supporting.

(A) Secured in Place.

(1) Raceways, Cable Assemblies, Boxes, Cabinets, and Fittings.

Raceways, cable assemblies, boxes, cabinets, and fittings shall be securely fastened in place.

(2) Limited-Energy ~~and Communications~~ Cables.

Limited-energy ~~and communications~~ cables installed on the surface of ceilings and sidewalls shall be supported by the building structure in such a manner that the cables will not be damaged by normal building use.

(B) Wiring Systems Installed Above Suspended Ceilings.

Support wires that do not provide secure support shall not be the sole support. Support wires and associated fittings that provide secure support and that are installed in addition to the ceiling grid support wires shall be permitted as the sole support. Where independent support wires are used, they shall be secured at both ends. Cables and raceways shall not be supported by ceiling grids.

(C) Fire-Rated Assemblies.

Wiring located within the cavity of a fire-rated floor-ceiling or roof-ceiling assembly shall not be secured to, or supported by, the ceiling assembly, including the ceiling support wires. An independent means of secure support shall be provided and shall be permitted to be attached to the assembly. Where independent support wires are used, they shall be distinguishable by color, tagging, or other effective means from those that are part of the fire-rated design.

Exception: The ceiling support system shall be permitted to support wiring and equipment that have been tested as part of the fire-rated assembly.

Informational Note: See ASTM E119, *Standard Test Methods for Fire Tests of Building Construction and Materials*, for one method of testing to determine fire rating.

(D) Non-Fire-Rated Assemblies.

Wiring located within the cavity of a non-fire-rated floor-ceiling or roof-ceiling assembly shall not be secured to, or supported by, the ceiling assembly, including the ceiling support wires. An independent means of secure support shall be provided and shall be permitted to be attached to the assembly. If independent support wires are used, they shall be distinguishable by color, tagging, or other effective means.

Exception: The ceiling support system shall be permitted to support branch-circuit wiring and associated equipment if installed in accordance with the ceiling system manufacturer's instructions.

(E) Raceways Used as Means of Support.

Raceways shall only be ~~used only~~ permitted as a means of support for other raceways, cables, or nonelectrical equipment under any of the following conditions:

(1) If the raceway or means of support is identified as a means of support

(2) If the raceway contains power supply conductors for electrically controlled equipment and is used to support Class 2 or Class 3 circuit conductors or cables that are solely for the purpose of connection to the equipment control circuits

(3) Overhead (aerial) spans of ~~optical fiber-type OF cables, communications drop wires, communications cables, and coaxial CATV cables~~ limited-energy cable drop wires shall be permitted to be attached to the exterior of a raceway-type mast intended for the attachment and support of such cables ~~, and where~~ if not prohibited elsewhere in this code.

(F) Cables Not Used as Means of Support.

Cable wiring methods shall not be used as a means of support for other cables, raceways, or nonelectrical equipment.

(G) Spaces Used for Environmental Air (Plenums).

If nonmetallic cable supports and other nonmetallic cable accessories are used to secure and support cables installed in other locations used for environmental air (plenums), they shall be listed as having low-smoke and heat-release properties in accordance with 720.22(C)(3).

Informational Note No. 1: See ANSI/BICSI N1-2019, *Installation Practices for Telecommunications and IC Cabling and Related Cabling Infrastructure*; ANSI/TIA-568.1- E-2020, *Commercial Building Telecommunications Infrastructure Standard*; ANSI/TIA-569-E-2019, *Telecommunications Pathways and Spaces*; ANSI/TIA-570-C-2012, Residential Telecommunications Infrastructure Standard; ANSI/TIA-1005-A-2012, *Telecommunications Infrastructure Standard for Industrial Premises*; ANSI/ TIA-1179-A-2017, *Healthcare Facility Telecommunications Infrastructure Standard*; ANSI/TIA-4966-2014, *Telecommunications Infrastructure Standard for Educational Facilities*; ANSI/NECA/FOA 301-2016, *Standard for Installing and Testing Fiber Optic Cables*, ANSI/TIA-568.0-d-2015, *General Telecommunications Cabling for Customer Premises*, and ANSI/TIA-568.3-d-2016, *Optical Fiber Cabling and Components Standard*, and other ANSI-approved installation standards for accepted industry practices.

Informational Note No. 2: See NFPA 90A-2024, *Standard for the Installation of Air-Conditioning and Ventilating Systems*, 8.5.5.6 for listing information of discrete combustible components installed in accordance with 300.25(C).

Informational Note No. 3: Paint, plaster, cleaners, abrasives, corrosive residues, or other contaminants may result in an undetermined alteration of wire and cable properties.

Additional Proposed Changes

File Name	Description	Approved
Limited_Energy_Roster-2026_2nd_Draft.pdf	Limited-Energy Task Group Roster-2nd Draft	

Statement of Problem and Substantiation for Public Comment

This public comment is submitted on behalf of the Limited-Energy Task Group (see attached roster) to delete redundant language in section 720.30(A)(2) and 720.30(E)(3) as the new definition of limited-energy cables proposed by companion PC-1371 includes communications cables. Upon the approval PC-1371 there will be no need for this redundant text.

Related Public Comments for This Document

Related Comment	Relationship
Public Comment No. 1371-NFPA 70-2024 [New Definition after Definition: Cable Joint.]	PC to create new definition of limited-energy cable.

Related Item

- FCR-221

Submitter Information Verification

Submitter Full Name: Kyle Krueger
Organization: NECA
Affiliation: NECA
Street Address:
City:
State:
Zip:

Submittal Date: Fri Aug 23 16:50:20 EDT 2024
Committee: NEC-P03

Limited Energy Task Group [2nd Draft]					
No.	First Name	Last Name	Class.	Organization	Other Committees
1	Kyle	Krueger	[I/M]	NECA	NEC-Correlating Comittee CMP 3 NFPA 72-Correlating Committee
2	Ernie	Gallo	[U/T]	NEBScore	
3	Derrick	Atkins	[L]	Minneapolis Electrical JA	NEC-Correlating Committee CMP 5
4	Anthony	Tassone	[R/T]	UL Solutions	CMP 3 CMP 16
5	Chad	Jones	[M]	Cisco	CMP 3
6	Sam	Rokowski	[I/M]	Maddox Inc.	CMP 3
7	George	Bish	[M]	Amazon/Ring Protect Inc	CMP 16
8	Trevor	Bowmer	[U]	Telecom Consulting	NEC Correlating Committee CMP 16
9	Ronald	Tellas	[M]	CCCA	CMP 3 CMP 16
10	Tim	Mikloiche	[E]	IAEI	CMP 3
11	Ryan	Jackosn	[M]	Steel Tube Industry	CMP 3
12	Diana	Lettkeman	[M]	Dish	CMP 16
13	John	Kacperski	[L]	IBEW	CMP 16

Public Comment No. 908-NFPA 70-2024 [Section No. 720.30(A)]

(A) Secured in Place.

(1) Raceways, Cable Assemblies, Boxes, Cabinets, and Fittings.

Raceways, cable assemblies, boxes, cabinets, and fittings shall be securely fastened in place.

(2) Limited-Energy and Communications Cables.

Limited-energy and communications cables installed on the surface of ceilings and sidewalls shall be supported by the building structure in such a manner that the cables will not be damaged by normal building use.

(3) Methods.

Cables shall be secured by hardware, including straps, staples, cable ties listed and identified for securing and supporting, and hangers, or similar fittings designed and installed so as not to damage the cable.

Statement of Problem and Substantiation for Public Comment

The comment seeks to bring the language currently (First Draft) residing in 722.30 to this section. Most of that section's requirements are already here, and there is no reason to have two sections in two different articles when the goal of the entire reconstruction of Chapters 7 and 8 is usablitiy, simplification, and the reduction of redundancy.
A companion comment to delete 722.30 will be submitted.

Related Public Comments for This Document

Related Comment	Relationship
Public Comment No. 909-NFPA 70-2024 [Section No. 722.30]	

Related Item

- FCR 238

Submitter Information Verification

Submitter Full Name: Ryan Jackson
Organization: Self-employed
Street Address:
City:
State:
Zip:

Submittal Date: Wed Aug 07 14:33:57 EDT 2024
Committee: NEC-P03

Public Comment No. 359-NFPA 70-2024 [Section No. 720.30(A)(2)]

(2) Limited-Energy ~~and Communications~~ Cables.

Limited-energy ~~and communications~~ cables installed on the surface of ceilings and sidewalls shall be supported by the building structure in such a manner that the cables will not be damaged by normal building use.

Statement of Problem and Substantiation for Public Comment

Communications cables are limited-energy cables. It is redundant to refer to “limited-energy and communications cables”; “limited-energy cables” is sufficient.

Related Public Comments for This Document

Related Comment	Relationship
Public Comment No. 127-NFPA 70-2024 [New Section after 722.1]	722.2 Listing of Limited-Energy Cables
Public Comment No. 336-NFPA 70-2024 [Section No. 720.5(B)]	
Public Comment No. 1619-NFPA 70-2024 [Article 720]	

Related Item

- Global FCR-221

Submitter Information Verification

Submitter Full Name: David Kiddoo
Organization: CCCA
Affiliation: Communications Cable & Connectivity Association
Street Address:
City:
State:
Zip:

Submittal Date: Tue Jul 30 11:31:18 EDT 2024
Committee: NEC-P03

Public Comment No. 898-NFPA 70-2024 [Sections 720.30(B), 720.30(C), 720.30(D)]

Sections 720.30(B), 720.30(C), 720.30(D)

(B) Wiring Systems Installed Above Suspended Ceilings.

~~Support wires that do not provide secure support~~
Wiring shall not be

~~the sole support~~
secured to or supported by the ceiling system, including the ceiling support wires . Support wires and associated fittings that provide secure support and that are installed in addition to the ceiling grid support wires shall be permitted as the sole support.

~~Where~~
If independent support wires are used, they shall be

~~secured at both ends. Cables and raceways shall not be supported by ceiling grids.~~

~~**(C)** Fire-Rated Assemblies.~~

~~Wiring located within the cavity of a fire-rated floor-ceiling or roof-ceiling assembly shall not be secured to, or supported by, the ceiling assembly, including the ceiling support wires. An independent means of secure support shall be provided and shall be permitted to be attached to the assembly. Where independent support wires are used, they shall be~~
distinguishable by color, tagging, or other

~~effective~~
means from those that are part of the

~~fire-rated design.~~

~~Exception: The~~

ceiling system and shall be secured at both ends.

Exception No. 1: The ceiling support system shall be permitted to support wiring and equipment that have been tested as part of the fire-rated assembly.

Informational Note:

~~See~~

~~Wiring located within the cavity of a non-fire-rated floor-ceiling or roof-ceiling assembly shall not be secured to, or supported by, the ceiling assembly, including the ceiling support wires. An independent means of secure support shall be provided and shall be permitted to be attached to the assembly. If independent support wires are used, they shall be distinguishable by color, tagging, or other effective means.~~

~~Exception: The ceiling support~~

See ASTM E119, *Standard Test Methods for Fire Tests of Building Construction and Materials* , for one method of testing to determine fire rating.

~~**(D)** Non-Fire-Rated Assemblies.~~

Exception No. 2: The ceiling system shall be permitted to support branch-circuit wiring and associated equipment if installed in accordance with the ceiling system manufacturer's instructions.

Statement of Problem and Substantiation for Public Comment

This simplification of the text was agreed upon in 300.13, although this comment (and a similar one to that section) adds the requirement for securing at both ends. The requirements for fire-resistance-rated ceilings and other ceilings used to be different, but the rules have evolved to make them so similar that there is no reason to have different requirements.

Related Public Comments for This Document

Related Comment	Relationship
Public Comment No. 373-NFPA 70-2024 [Section No. 300.13(B)]	

Related Item

- FCR 221

Submitter Information Verification

Submitter Full Name: Ryan Jackson
Organization: Self-employed
Street Address:
City:
State:
Zip:

Submittal Date: Wed Aug 07 12:56:30 EDT 2024
Committee: NEC-P03

Public Comment No. 361-NFPA 70-2024 [Section No. 720.30(E)]

(E) Raceways Used as Means of Support.

Raceways shall be used only as a means of support for other raceways, cables, or nonelectrical equipment under any of the following conditions:

(1) If the raceway or means of support is identified as a means of support

(2) If the raceway contains power supply conductors for electrically controlled equipment and is used to support Class 2 or Class 3 circuit conductors or cables that are solely for the purpose of connection to the equipment control circuits

(3) Overhead (aerial) spans of optical fiber ~~-type OF~~ cables, communications drop wires, communications cables, ~~and~~ coaxial-CATV cables and network-powered broadband communications low-power cables attached to the exterior of a raceway-type mast intended for the attachment and support of such cables, and where not prohibited elsewhere in this code.

Statement of Problem and Substantiation for Public Comment

Network-powered broadband communications low-power cables were omitted in the First Revision. The PC fixes it.

Related Public Comments for This Document

Related Comment	Relationship
Public Comment No. 1619-NFPA 70-2024 [Article 720]	

Related Item

- Global FCR-221

Submitter Information Verification

Submitter Full Name: David Kiddoo
Organization: CCCA
Affiliation: Communications Cable & Connectivity Association
Street Address:
City:
State:
Zip:

Submittal Date: Tue Jul 30 11:35:19 EDT 2024
Committee: NEC-P03

Public Comment No. 899-NFPA 70-2024 [Section No. 720.30(E)]

(E) Raceways Used as Means of Support.

Raceways shall only be used ~~only~~ as a means of support for other raceways, cables, or nonelectrical equipment under any of the following conditions:

(1) If the raceway or means of support is identified as a means of support

(2) If the raceway contains power supply conductors for electrically controlled equipment and is used to support Class 2 or Class 3 circuit conductors or cables that are solely for the purpose of connection to the equipment control circuits

(3) Overhead (aerial) spans of optical fiber-type OF cables, communications drop wires, communications cables, and coaxial-CATV cables attached to the exterior of a raceway-type mast intended for the attachment and support of such cables, and where not prohibited elsewhere in this code.

Statement of Problem and Substantiation for Public Comment

The intent is not to limit the use of raceways, but to limit their use as a support mechanism.

Related Item

- FCR 221

Submitter Information Verification

Submitter Full Name: Ryan Jackson
Organization: Self-employed
Street Address:
City:
State:
Zip:

Submittal Date: Wed Aug 07 12:59:35 EDT 2024
Committee: NEC-P03

Public Comment No. 1373-NFPA 70-2024 [Section No. 721.1]

721.1 Scope.

This article covers power source requirements for limited-energy system circuits.

Additional Proposed Changes

File Name	Description	Approved
Limited_Energy_Roster-2026_2nd_Draft.pdf	Limited-Energy Task Group Roster-2nd Draft	

Statement of Problem and Substantiation for Public Comment

This public comment is submitted on behalf of the Limited-Energy Task Group (see attached roster) to modify the scope of Article 721 to include the term limited-energy system as this not only simplifies the scope but makes the coverage of Article 721 more inclusive.
See companion PC-1370

Related Public Comments for This Document

Related Comment	Relationship
Public Comment No. 1370-NFPA 70-2024 [Definition: Limited-Energy System.]	PC for revised definition of Limited-Energy System

Related Item

- FCR-237

Submitter Information Verification

Submitter Full Name: Kyle Krueger
Organization: NECA
Affiliation: NECA
Street Address:
City:
State:
Zip:

Submittal Date: Wed Aug 21 15:50:42 EDT 2024
Committee: NEC-P03

Limited Energy Task Group [2nd Draft]					
No.	First Name	Last Name	Class.	Organization	Other Committees
1	Kyle	Krueger	[I/M]	NECA	NEC-Correlating Comittee CMP 3 NFPA 72-Correlating Committee
2	Ernie	Gallo	[U/T]	NEBScore	
3	Derrick	Atkins	[L]	Minneapolis Electrical JA	NEC-Correlating Committee CMP 5
4	Anthony	Tassone	[R/T]	UL Solutions	CMP 3 CMP 16
5	Chad	Jones	[M]	Cisco	CMP 3
6	Sam	Rokowski	[I/M]	Maddox Inc.	CMP 3
7	George	Bish	[M]	Amazon/Ring Protect Inc	CMP 16
8	Trevor	Bowmer	[U]	Telecom Consulting	NEC Correlating Committee CMP 16
9	Ronald	Tellas	[M]	CCCA	CMP 3 CMP 16
10	Tim	Mikloiche	[E]	IAEI	CMP 3
11	Ryan	Jackosn	[M]	Steel Tube Industry	CMP 3
12	Diana	Lettkeman	[M]	Dish	CMP 16
13	John	Kacperski	[L]	IBEW	CMP 16

Public Comment No. 936-NFPA 70-2024 [Section No. 721.30(C)]

(C) Marking.

The equipment supplying the circuits shall be durably marked where plainly visible to indicate each circuit that is a Class 2 or Class 3 circuit. The power sources for limited power circuits in 721.30(A)(3), limited power circuits for listed audio/video equipment, listed information technology equipment, listed communications equipment, and listed industrial equipment in 721.30(A)(4) shall have a label indicating the maximum voltage and rated current output per conductor for each connection point on the power source. Where multiple connection points have the same rating, a single label shall be permitted to be used.

Informational Note No. 1: Rated current for power sources covered in ~~794.204 is~~ 722.140(B) is the output current per conductor the power source is designed to deliver to an operational load at normal operating conditions, as declared by the manufacturer.

Informational Note No. 2: An example of a label is “52V @ 0.433A, 57V MAX” for an IEEE 802.3 compliant Class 8 power source.

Additional Proposed Changes

File Name	Description	Approved
Limited_Energy_Roster-2026_2nd_Draft.pdf	Limited-Energy Task Group Roster-2nd Draft	

Statement of Problem and Substantiation for Public Comment

This Public Comment is submitted on behalf of the Limited-Energy Task Group (see attached roster) to correct the reference in the informational note no.1 to the new correct location in 722.140(B) for the ampacity of Class 2 and 3 cables.

Related Item

- FCR-237

Submitter Information Verification

Submitter Full Name: Kyle Krueger
Organization: NECA
Affiliation: NECA
Street Address:
City:
State:
Zip:

Submittal Date: Wed Aug 07 17:23:19 EDT 2024
Committee: NEC-P03

Limited Energy Task Group [2nd Draft]					
No.	First Name	Last Name	Class.	Organization	Other Committees
1	Kyle	Krueger	[I/M]	NECA	NEC-Correlating Comittee CMP 3 NFPA 72-Correlating Committee
2	Ernie	Gallo	[U/T]	NEBScore	
3	Derrick	Atkins	[L]	Minneapolis Electrical JA	NEC-Correlating Committee CMP 5
4	Anthony	Tassone	[R/T]	UL Solutions	CMP 3 CMP 16
5	Chad	Jones	[M]	Cisco	CMP 3
6	Sam	Rokowski	[I/M]	Maddox Inc.	CMP 3
7	George	Bish	[M]	Amazon/Ring Protect Inc	CMP 16
8	Trevor	Bowmer	[U]	Telecom Consulting	NEC Correlating Committee CMP 16
9	Ronald	Tellas	[M]	CCCA	CMP 3 CMP 16
10	Tim	Mikloiche	[E]	IAEI	CMP 3
11	Ryan	Jackosn	[M]	Steel Tube Industry	CMP 3
12	Diana	Lettkeman	[M]	Dish	CMP 16
13	John	Kacperski	[L]	IBEW	CMP 16

Public Comment No. 944-NFPA 70-2024 [New Section after 721.50(A)]

721.60. Power Source for Premise-Powered Broadband Communication Systems.

The power source for circuits intended to provide power over communications cables to remote equipment shall be limited in accordance with Table 11(B) in Chapter 9 for voltage sources up to 60 volts dc and be listed as specified in either of the following:

(1) A power source shall be listed as specified in 721.30(A)(1), 721.30 (A)(2), 721.30(A)(3), or 721.30(A)(4). The power sources shall not have the output connections paralleled or otherwise interconnected unless listed for such interconnection.

(2) A power source shall be listed as communications equipment for limited-power circuits.

Informational Note: See ~~ANSI/~~ UL 60950-1-~~2014~~ 2019, *~~Standard for Safety of~~ Information Technology Equipment-Safety — Part 1*, or ~~ANSI/~~ *UL 62368-1-~~2014~~ 2021, Audio/Video, Information and Communication Technology Equipment — Part 1: Safety Requirements*. *Typically, such circuits are used to interconnect equipment for the purpose of exchanging information (data)*

Additional Proposed Changes

File Name	Description	Approved
Limited_Energy_Roster-2026_2nd_Draft.pdf	Limited-Energy Task Group Roster-2nd Draft	

Statement of Problem and Substantiation for Public Comment

This public comment is submitted on behalf of the Limited-Energy Task Group (see attached roster) to add the power source requirements for Premise-Powered Broadband Communications Systems to new article 721 for limited-energy power sources, specifically section 721.60, as they were deleted from section 840.170(B) during the first draft reorganization work.

Related Item

- FCR-237

Submitter Information Verification

Submitter Full Name: Kyle Krueger
Organization: NECA
Affiliation: NECA
Street Address:
City:
State:
Zip:

Submittal Date: Wed Aug 07 17:42:08 EDT 2024
Committee: NEC-P03

Limited Energy Task Group [2nd Draft]					
No.	First Name	Last Name	Class.	Organization	Other Committees
1	Kyle	Krueger	[I/M]	NECA	NEC-Correlating Comittee CMP 3 NFPA 72-Correlating Committee
2	Ernie	Gallo	[U/T]	NEBScore	
3	Derrick	Atkins	[L]	Minneapolis Electrical JA	NEC-Correlating Committee CMP 5
4	Anthony	Tassone	[R/T]	UL Solutions	CMP 3 CMP 16
5	Chad	Jones	[M]	Cisco	CMP 3
6	Sam	Rokowski	[I/M]	Maddox Inc.	CMP 3
7	George	Bish	[M]	Amazon/Ring Protect Inc	CMP 16
8	Trevor	Bowmer	[U]	Telecom Consulting	NEC Correlating Committee CMP 16
9	Ronald	Tellas	[M]	CCCA	CMP 3 CMP 16
10	Tim	Mikloiche	[E]	IAEI	CMP 3
11	Ryan	Jackosn	[M]	Steel Tube Industry	CMP 3
12	Diana	Lettkeman	[M]	Dish	CMP 16
13	John	Kacperski	[L]	IBEW	CMP 16

Public Comment No. 1314-NFPA 70-2024 [Article 722]

Article 722 Limited-Energy Cables for Power-Limited Circuits, Fault-Managed-Power Circuits, Optical Fiber Circuits, and Communications Circuits

Part I. General

722.1 Scope.

This article covers the general requirements for the installation of single- and multiple-conductor cables used in Class 2 and Class 3 power-limited circuits, power-limited fire alarm (PLFA) circuits, Class 4 fault-managed power circuits, optical fiber cables, and communications systems power-limited, remote-control, and signaling circuits that are not an integral part of a device or utilization equipment installed inside of buildings.

These general requirements also cover cables used in communications systems and apply to communications circuits, data communications, community antenna television and radio distribution systems, network-powered broadband communications systems, and premises-powered broadband communications systems, unless modified by applicable parts of Articles 800, 810, 820, 830, or 840.

Informational Note No. 1: See 206.4 for classifications of remote-control and signaling circuits.

Informational Note No. 2: Class 4 fault-managed power systems consist of a Class 4 power transmitter and a Class 4 power receiver connected by a Class 4 cabling system. These systems are characterized by monitoring the circuit for faults and controlling the source current to ensure the energy delivered into any fault is limited. Class 4 systems differ from Class 1, Class 2, and Class 3 systems in that they are not limited for power delivered to an appropriate load. They are current limited for faults between the Class 4 transmitter and Class 4 receiver.

Informational Note No. 3: The circuits described herein are characterized by usage and electrical power limitations that differentiate them from electric light and power circuits; therefore, alternative requirements are given regarding minimum wire sizes, ampacity adjustment and correction factors, overcurrent protection, installation requirements, and wiring methods and materials.

722.4 Other Articles.

In addition to the requirements of this article, installations of limited-energy and communications wires and cables shall also comply with the following:

(1) Class 2 and Class 3 cables: Article 725, Part II and Article 722, Parts I and II

(2) Class 4 cables: Article 726, Part II and IV and Article 722, Parts I and II

(3) Fire alarm cables: Article 760, Part III

(4) Optical fiber cables: Article 770, Part V

(5) Coaxial cables — installations of premises (within buildings) CATV and radio distribution circuits: Article 820, Part V

722.12 Uses Not Permitted.

Class 4 cables shall not be permitted for any applications that are not part of a Class 4 system.

Exception: Use of Class 4 cable for other applications shall be permitted if the cable has been listed as suitable for the other applications.

722.14 Cables Containing Communications and Power Circuits.

Cables carrying data or communications circuits as well as power circuits shall be classified as electrical power circuits in accordance with the type of electrical power carried.

Exception: PoE circuits shall be permitted to be classified as communications and Class 2 or Class 3.

Informational Note: Communications circuits carrying power in accordance with Article 805, Part II, 820.15, 830.15, or 840.160 are considered according to their appropriate article for each type of circuit.

722.27 Temperature Limitation of Limited-Energy and Communications Cables.

No cable shall be used in such a manner that its operating temperature exceeds that of its rating.

722.30 Securing and Supporting.

(A) General.

In addition to the requirements of 720.19 and 720.30, limited-energy and communications cables shall be installed in accordance with 722.30(A)(1) and 722.30(A)(2).

(1) Supporting.

Cables installed exposed on the surface of ceilings and sidewalls shall be supported by the building structure in such a manner that the cable will not be damaged by normal building use.

(2) Securing.

Such cables shall be secured by hardware, including straps, staples, cables ties listed and identified for securement and support, and hangers, or similar fittings designed and installed so as not to damage the cable.

(B) Spaces Used for Environmental Air (Plenums).

Limited-energy and communications cables installed in other spaces used for environmental air (plenums) shall be secured and supported in accordance with 720.30(G).

Part II. ~~Listing and~~ **Marking Requirements**

722.100 Listing of Limited-Energy and Communications Cables.

Cables installed in buildings shall be listed in accordance with 722.100(A)(1) through 722.100(A)(16).

Exception No. 1: Optical fiber cables that are installed in compliance with 722.168 shall not be required to be listed.

Exception No. 2: Cables installed in compliance with 800.48 shall not be required to be listed.

(A) Listing of Cables.

Cables installed as wiring methods within buildings shall be listed as resistant to the spread of fire and other criteria in accordance with 722.100(A)(1) through 722.100(A)(16).

Informational Note No. 1: See UL 13, *Standard for Power-Limited Circuit Cables*, for applicable requirements for listing of Class 2 and Class 3 cable and power-limited tray cable (PLTC).

Informational Note No. 2: See UL 1424, *Cables for Power-Limited Fire-Alarm Circuits*, for applicable requirements for listing of power-limited fire alarm cable.

Informational Note No. 3: See UL 1651, *Optical Fiber Cable*, for applicable requirements for listing of optical fiber cable.

Informational Note No. 4: See UL 1400-2, *Outline for Fault-Managed Power Systems — Part 2: Requirements for Class 4 Cables*, for applicable requirements for listing of Class 4 cable.

(1) Plenum Cable.

Plenum cable shall be listed as suitable for use in ducts, plenums, and other space for environmental air and shall be listed as having adequate fire-resistant and low-smoke producing characteristics. Plenum cable types shall be identified in Table 722.102(A).

Informational Note: See NFPA 262-2023, *Standard Method of Test for Flame Travel and Smoke of Wires and Cables for Use in Air-Handling Spaces*, for the test method used to determine that a cable is low-smoke producing and fire resistant, exhibiting a maximum peak optical density of 0.50 or less, an average optical density of 0.15 or less, and a maximum flame spread distance of 1.52 m (5 ft) or less.

(2) Riser Cable.

Riser cable shall be listed as suitable for use in a vertical run in a shaft or from floor to floor and shall be listed as having fire-resistant characteristics capable of preventing the carrying of fire from floor to floor.

Informational Note: See ANSI/UL 1666-2012, *Test for Flame Propagation Height of Electrical and Optical-Fiber Cable Installed Vertically in Shafts*, for the cable requirements defining fire-resistant characteristics capable of preventing the carrying of fire from floor to floor.

(3) General-Purpose Cable.

General-purpose cable shall be listed as resistant to the spread of fire and as suitable for general-purpose use, except for use in risers, ducts, plenums, and other space used for environmental air.

Informational Note: See UL 2556, *Wire and Cable Test Methods*, for defining *resistant to the spread of fire*. One method is to demonstrate that the cables do not spread fire to the top of the tray in the UL Flame Exposure, Vertical Tray Flame Test. The smoke measurements in the test method are not applicable. A method of defining *resistant to the spread of fire* is for the damage (char length) not to exceed 1.5 m (4 ft 11 in.) when performing the FT4 Vertical Flame Test.

(4) Alternative General-Purpose Cable.

Alternative general-purpose optical fiber cable shall be listed as suitable for general-purpose use, with the exception of risers and plenums, and shall also be resistant to the spread of fire.

Informational Note: See CSA C22.2 No. 0.3-M-2001, *Test Methods for Electrical Wires and Cables*, for the CSA Vertical Flame Test — cables in cable trays, that can also be used to define *resistant to the spread of fire* when the damage (char length) does not exceed 1.5 m (4 ft 11 in.).

(5) Limited-Use Cable.

Limited-use cable shall be listed as suitable for use in dwellings and raceways and shall be listed as resistant to flame spread.

Informational Note: See ANSI/UL 2556, *Standard for Wire and Cable Test Methods*, for one method of determining that cable is resistant to flame spread by testing the cable to the FV-2/VW-1 test.

(6) Type PLTC.

Type PLTC nonmetallic-sheathed, power-limited tray cable shall be listed as being suitable for cable trays, resistant to the spread of fire, and sunlight- and moisture-resistant. Type PLTC cable used in a wet location shall be listed for use in wet locations and marked “wet” or “wet location.”

Informational Note: See ANSI/UL 1685-2010, *Standard for Safety for Vertical-Tray Fire-Propagation and Smoke-Release Test for Electrical and Optical-Fiber Cables*, for the UL Flame Exposure, Vertical Tray Flame Test that is used to determine resistance to the spread of fire when cables do not spread fire to the top of the tray. The smoke measurements in the test method are not applicable. See CSA C22.2 No. 0.3-M-2001, *Test Methods for Electrical Wires and Cables*, for the CSA Vertical Flame Test — cables in cable trays that can also be used to define *resistant to the spread of fire* when the damage (char length) does not exceed 1.5 m (4 ft 11 in.).

(7) Circuit Integrity (CI) Cable, Fire-Resistive Cable System, or Electrical Circuit Protective System.

Cables that are used for survivability of critical circuits under fire conditions shall comply with 722.100(A)(7)(a), 722.100(A)(7)(b), or 722.100(A)(7)(c).

Informational Note: See *NFPA 72*-2025, *National Fire Alarm and Signaling Code*, 12.4.3 and 12.4.4 for additional information on fire alarm CI cable, fire-resistive cable systems, or electrical circuit protective systems used for fire alarm circuits to comply with the survivability requirements to maintain the circuit’s electrical function during fire conditions for a defined period of time.

(a) *CI Cables.* CI cables of the types specified in 722.100(A)(1), 722.100(A)(2), 722.100(A)(3), 722.100(A)(4), and 722.100(A)(6) and used for survivability of critical circuits shall be marked with the additional classification using the suffix “CI.” To maintain its listed fire-resistive rating, CI cable shall only be installed in free air in accordance with 722.180(B). CI cables shall only be permitted to be installed in a raceway where specifically listed and marked as part of a fire-resistive cable system as covered in 722.100(A)(7)(b).

Informational Note: See UL 2196, *Fire Test for Circuit Integrity of Fire-Resistive Power, Instrumentation, Control and Data Cables*, and UL 1425, *Cables for Non–Power-Limited Fire-Alarm Circuits*, for information on establishing a rating for CI cable. The *UL Guide Information for Nonpower-limited Fire Alarm Circuits (HNHT)* contains information to identify the cable and its installation limitations to maintain the fire-resistive rating.

(b) *Fire-Resistive Cables.* Fire-resistive cables of the types specified in 722.100(A)(1), 722.100(A)(2), 722.100(A)(3), 722.100(A)(4), 722.100(A)(6), and 722.100(A)(7)(a) that are part of a fire-resistive cable system shall be identified with the system identifier and hourly rating marked on the protectant or the smallest unit container and installed in accordance with the listing of the system.

Informational Note: See UL 2196, *Fire Test for Circuit Integrity of Fire-Resistive Power, Instrumentation, Control and Data Cables*, for information on establishing a rating for a fire-resistive cable system. The *UL Guide Information for Electrical Circuit Integrity Systems (FHIT)* contains information to identify the system and its installation limitations to maintain a minimum fire-resistive rating.

(c) *Electrical Circuit Protective System.* Protectants for cables of the types specified in 722.100(A)(1), 722.100(A)(2), 722.100(A)(3), 722.100(A)(4), and 722.100(A)(6) that are part of an electrical circuit protective system shall be identified with the protective system identifier and hourly rating marked on the protectant or the smallest unit container and installed in accordance with the listing of the protective system.

Informational Note: See UL 1724, *Fire Tests for Electrical Circuit Protective Systems*, for information on establishing a rating for an electrical circuit protective system. The *UL Guide Information for Electrical Circuit Integrity Systems (FHIT)* contains information to identify the system and its installation limitations to maintain the fire-resistive rating.

(8) Class 3 Single Conductors.

Class 3 single conductors used as other wiring within buildings shall be listed Type CL3 and shall not be smaller than 18 AWG.

Informational Note: See ANSI/UL 1685-2010, *Standard for Safety for Vertical-Tray Fire-Propagation and Smoke-Release Test for Electrical and Optical-Fiber Cables*, for the UL Flame Exposure, Vertical Tray Flame Test that is used to determine resistance to the spread of fire when cables do not spread fire to the top of the tray. The smoke measurements in the test method are not applicable. See CSA C22.2 No. 0.3-M-2001, *Test Methods for Electrical Wires and Cables*, for the CSA Vertical Flame Test — cables in cable trays that can also be used to define *resistant to the spread of fire* when the damage (char length) does not exceed 1.5 m (4 ft 11 in.).

(9) Limited Power (LP) Cable.

Class 2 and Class 3 LP cables shall be listed as suitable for carrying power and data up to a specified current limit for each conductor without exceeding the temperature rating of the cable. The cables shall be marked with the suffix "-LP (XXA)" where XXA designates the current limit in amperes per conductor.

Informational Note: An example of the marking on 23 AWG, 4-pair, Class 2 cable rated 75°C (167°F) with an LP current rating of 0.6 amperes per conductor is "CL2-LP (0.6A) 75°C 23 AWG 4-pair."

(10) Under-Carpet Cables.

Under-carpet cable shall be listed as suitable for use under carpet, floor covering, modular tiles, and planks.

Informational Note: See UL 444, *Standard for Safety for Communications Cables*, for the compressive loading test used to determine the suitability of cable for under-carpet use.

(11) Wet Locations.

Cable used in a wet location shall be listed for use in wet locations and be marked "wet" or "wet location" or have a moisture-impervious metal sheath.

(12) Field-Assembled Optical Fiber Cables.

Field-assembled optical fiber cable shall comply with 722.100(A)(12)(a) through 722.100(A)(12)(d).

(a) The specific combination of jacket and optical fibers intended to be installed as a field-assembled optical fiber cable shall be one of the types in 722.100(A)(1), 722.100(A)(2), or 722.100(A)(3) and shall be marked in accordance with Table 722.102(A).

(b) The jacket of a field-assembled optical fiber cable shall have a surface marking indicating the specific optical fibers with which it is identified for use.

(c) The optical fibers shall have a permanent marking, such as a marker tape, indicating the jacket with which they are identified for use.

(d) The jacket without fibers shall meet the listing requirements for communications raceways in 722.110 and 722.111 in accordance with the cable marking.

(13) Cables Containing Optical Fibers.

Composite optical fiber cables shall be listed as electrical cables based on the type of electrical conductors.

(14) Class 2 and Class 3 Cable Voltage and Temperature Ratings.

Class 2 cables shall have a voltage rating of not less than 150 volts. Class 3 cables shall have a voltage rating of not less than 300 volts. Class 2 and Class 3 cables shall have a temperature rating of not less than 60°C (140°F).

(15) Power-Limited Fire Alarm (PLFA) Cables.

PFLA cables shall comply with 722.100(A)(15)(a) through 722.100(A)(15)(d).

(a) Conductors for cables, other than coaxial cables, shall be solid or stranded copper. Coaxial cables shall be permitted to use 30 percent conductivity copper-covered steel center conductor wire.

(b) The size of conductors in a multiconductor cable shall not be smaller than 26 AWG. Single conductors shall not be smaller than 18 AWG. Conductors of 26 AWG shall be permitted only where spliced with a connector listed as suitable for 26 AWG to 24 AWG or larger conductors that are terminated on equipment or where the 26 AWG conductors are terminated on equipment listed as suitable for 26 AWG conductors.

(c) Cables shall have a voltage rating of not less than 300 volts. (d) Cables shall have a temperature rating of not less than 60°C (140°F).

(16) Class 4 Cable Construction.

(a) *Sizes.* Conductors of sizes not smaller than 24 AWG shall be permitted to be used.

(b) *Insulation.* Insulation on conductors shall be rated not less than 450 volts dc.

(c) *Voltage Rating.* Cables shall have a voltage rating of not less than 450 volts dc. Voltage ratings shall not be marked on the cables.

(d) *Temperature Rating.* Cables shall have a temperature rating of not less than 60°C (140°F).

722.102 Marking of Listed Limited-Energy and Communications Cables.

(A) General.

Cables installed in buildings shall be marked in accordance with 722.102(A), and they shall be permitted to be marked in accordance with 722.102(B).

Cables shall be durably marked on the surface in accordance with the following:

(1) The AWG size or circular mil area shall be repeated at intervals not exceeding 610 mm (24 in.).

(2) All other markings shall be repeated at intervals not exceeding 1.0 m (40 in.).

(3) The proper type designation for the type of cable shall be marked in accordance with Table 722.102(A).

(4) The manufacturer's name, trademark, or other distinctive marking by which the organization responsible for the product can be readily identified shall be marked.

(5) The AWG size or circular mil area shall be marked.

Informational Note No. 1: See Chapter 9, Table 8 for conductor area expressed in SI units for conductor sizes specified in AWG or circular mil area.

(6) The temperature rating for a temperature rating exceeding 60°C (140°F) shall be marked.

Informational Note No. 2: A minimum temperature rating of 60°C (140°F) is assumed for cables not marked with a temperature rating.

(7) Voltage ratings shall not be marked on the cables.

Exception: Voltage markings shall be permitted where the cable has multiple listings, and a voltage marking is required for one or more of the listings.

Informational Note No. 3: Voltage markings on cables could be misinterpreted to suggest that the cables may be suitable for Class 1 electric light and power applications.

Informational Note No. 4: Cable types are listed in descending order of fire resistance rating.

Table 722.102(A) Cable Type Markings

Cable Type	Cable Marking
Class 4 plenum cable	CL4P
Class 3 plenum cable	CL3P
Class 2 plenum cable	CL2P
Power-limited fire alarm plenum cable	FPLP
Nonconductive optical fiber plenum cable	OFNP
Conductive optical fiber plenum cable	OFCP
Class 4 riser cable	CL4R
Class 3 riser cable	CL3R
Class 2 riser cable	CL2R
Power-limited fire alarm riser cable	FPLR
Nonconductive optical fiber riser cable	OFNR
Conductive optical fiber riser cable	OFCR
Class 4 general-purpose cable	CL4
Class 3 general-purpose cable	CL3
Class 2 general-purpose cable	CL2
Class 4 outdoor-only use cable	CL4Z
Power-limited fire alarm cable	FPL
Nonconductive general-purpose optical fiber cable	OFN
Conductive general-purpose optical fiber cable	OFC
Alternative nonconductive general-purpose optical fiber cable	OFNG
Alternative conductive general-purpose optical fiber cable	OFCG
Class 3 cable — limited use	CL3X
Class 2 cable — limited use	CL2X
Under-carpet cable	CMUC

Note: All types of CL2, CL3, CL4, and FPL cables containing optical fibers are provided with the suffix "-OF."

(B) Optional Markings.

Cables shall be permitted to be surface marked to indicate special characteristics of the cable materials.

Informational Note No. 1: Examples of these characteristics include, but are not limited to, limited smoke, halogen free, low smoke and halogen free, and sunlight resistant.

Informational Note No. 2: Some examples of optional markings are ST1 to indicate limited smoke characteristics. See UL 2556, *Wire and Cable Test Methods*, HF to indicate halogen free. See in UL 2885, *Outline of Investigation for Acid Gas, Acidity and Conductivity of Combusted Materials*, and LSHF to indicate halogen free and low-smoke characteristics. See IEC 61034-2, *Measurement of smoke density of cables burning under defined conditions — Part 2: Test procedure and requirements*.

Part III. Wiring Methods, Applications and Installations Inside Buildings

722.110 Application and Installation of Raceways, Cable Routing Assemblies, and Cable Trays.

(A) Application of Listed Communications Raceways in Buildings.

Permitted and nonpermitted applications of listed communications raceways shall be in accordance with Table 722.110(A).

Table 722.110(A) Applications of Listed Communications Raceways in Buildings.

Applications		Listed Communications Raceway Type		
		Plenum	Riser	General-Purpose
In ducts specifically fabricated for environmental air as described in 720.22(B)	In fabricated ducts	N	N	N
	In metal raceway that complies with 300.25(B)	N	N	N
In other spaces used for environmental air (plenums) as described in 720.22(C)	In other spaces used for environmental air	Y	N	N
	-	In metal raceway that complies with 300.25(C)	Y	Y
	-	In plenum cable routing assemblies	N	N
	-	Supported by open metal cable trays	Y	N
	-	Supported by solid bottom metal cable trays with solid metal covers	Y	Y
In risers	In vertical runs	Y	Y	N
	In metal raceways	Y	Y	Y
	In fireproof shafts	Y	Y	Y
	In plenum cable routing assemblies	N	N	N
	In riser cable routing assemblies	N	N	N
	In one- and two-family dwellings	Y	Y	Y
Within buildings in other than air-handling spaces and risers	General	Y	Y	Y
	In one- and two-family dwellings	Y	Y	Y
	In multifamily dwellings	Y	Y	Y
	In nonconcealed spaces	Y	Y	Y
	Supported by cable trays	Y	Y	Y
	Under carpet, modular flooring, and planks	N	N	N
	In distributing frames and cross-connect arrays	Y	Y	Y
	In any raceway recognized in Chapter 3	Y	Y	Y
	In plenum cable routing assemblies	N	N	N
	In riser cable routing assemblies	N	N	N
	In general-purpose cable routing assemblies	N	N	N

Note: An “N” in the table indicates that the communications raceway type shall not be installed in the application. A “Y” indicates that the communications raceway type shall be permitted to be installed in the application, subject to the limitations described in 722.111 and 722.131.

(B) Application of Listed Cable Routing Assemblies.

Permitted and nonpermitted applications of listed cable routing assemblies shall be in accordance with Table 722.110(B).

Table 722.110(B) Applications of Listed Cable Routing Assemblies in Buildings.

Applications		Listed Cable Routing Assembly Type		
		Plenum	Riser	General-Purpose
In ducts specifically fabricated for environmental air as described in 720.22(B)	In fabricated ducts	N	N	N
	In metal raceway that complies with 300.25(B)	N	N	N
In other spaces used for environmental air (plenums) as described in 720.22(C)	In other spaces used for environmental air	Y	N	N
	In metal raceway that complies with 300.25(C)	Y	Y	Y
	-	In plenum cable routing assemblies	N	N	N
	-	Supported by open metal cable trays	Y	N	N
	-	Supported by solid bottom metal cable trays with solid metal covers	Y	Y	Y
In risers	In vertical runs	Y	Y	N
	-	In metal raceways	Y	Y	Y
	-	In fireproof shafts	Y	Y	Y
	-	In plenum cable routing assemblies	N	N	N
	In riser cable routing assemblies	N	N	N
	-	In one- and two-family dwellings	Y	Y	Y
Within buildings in other than air-handling spaces and risers	General	Y	Y	Y
	In one- and two-family dwellings	Y	Y	Y
	In multifamily dwellings	Y	Y	Y
	In nonconcealed spaces	Y	Y	Y
	Supported by cable trays	Y	Y	Y
	Under carpet, modular flooring, and planks	N	N	N
	In distributing frames and cross-connect arrays	Y	Y	Y
	In any raceway recognized in Chapter 3	Y	Y	Y
	In plenum cable routing assemblies	N	N	N

Applications		Listed Cable Routing Assembly Type		
		Plenum	Riser	General-Purpose
	In riser cable routing assemblies	N	N	N
	In general-purpose cable routing assemblies	N	N	N

Note: An “N” in the table indicates that the cable routing assembly type shall not be installed in the application. A “Y” indicates that the cable routing assembly type shall be permitted to be installed in the application subject to the limitations described in 722.131.

722.111 Installation of Raceways, Cable Routing Assemblies, and Cable Trays.

(A) Types of Raceways.

Wires and cables shall be permitted to be installed in raceways that comply with 722.111(A)(1), 722.111(A)(2), or 722.111(A)(3). Medium-power network-powered broadband communications cables shall not be installed in raceways that comply with 722.111(A)(2).

(1) Permitted Raceways.

Wires and raceways shall be permitted to be in any raceway included in Chapter 3. The raceways shall be installed in accordance with Chapter 3.

(2) Communications Raceways.

Wires and cables shall be permitted to be installed in plenum communications raceways, riser communications raceways, and general-purpose communications raceways selected in accordance with Table 722.110(A), listed in accordance with 722.110(A), and installed in accordance with 722.131 and 362.24 through 362.56, where the requirements applicable to electrical nonmetallic tubing (ENT) apply.

(3) Innerduct for Communications Wires and Cables, Coaxial Cables, or Network-Powered Broadband Communications Cables.

Listed plenum communications raceways, listed riser communications raceways, and listed general-purpose communications raceways selected in accordance with Table 722.110(A) shall be permitted to be installed as innerduct in any type of listed raceway permitted in Chapter 3.

(4) Raceway Fill.

The raceway fill requirements of 720.6(B)(1) shall apply to medium-power network-powered broadband communications cables.

(5) Permitted Substitutions.

Substitutions of listed communications raceways shall be permitted in accordance with Table 722.111(A)(5).

Table 722.111(A)(5) Permitted Substitutions of Listed Communications Raceways

Raceway Type	Permitted Substitution
Riser communications raceway	Plenum communications raceway
General purpose communications raceway	Plenum communications raceway, riser communications raceway

(B) Cable Routing Assemblies.

Cables shall be permitted to be installed in plenum cable routing assemblies, riser cable routing assemblies, and general-purpose cable routing assemblies selected in accordance with Table 722.110(B), listed in accordance with 722.110(B), and installed in accordance with 722.111(B)(1), 722.111(B)(2), and 722.131.

(1) Horizontal Support.

Cable routing assemblies shall be supported where run horizontally at intervals not to exceed 900 mm (3 ft) and at each end or joint, unless listed for other support intervals. In no case shall the distance between supports exceed 3 m (10 ft).

(2) Vertical Support.

Vertical runs of cable routing assemblies shall be supported at intervals not exceeding 1.2 m (4 ft), unless listed for other support intervals, and shall not have more than one joint between supports.

(3) Permitted Substitutions.

Substitutions of listed cable routing assemblies shall be permitted in accordance with Table 722.111(B)(3).

Table 722.111(B)(3) Permitted Substitutions of Listed Communications Raceways

Raceway Type	Permitted Substitution
Riser communications raceway	Plenum communications raceway
General purpose communications raceway	Plenum communications raceway, riser communications raceway

(C) Cable Trays.

Wires and cables and communications raceways shall be permitted to be installed in metal or listed nonmetallic cable tray systems. Ladder cable trays shall be permitted to support cable routing assemblies.

722.112

Table 722.112 Limited-Energy Cable Type

Plenum limited-energy cables	CMP	Communications plenum cables	
	CATVP	Community antenna television plenum cables	
	BLP	Network-powered broadband communications low-power plenum cables	
	FPLP	Power-limited fire alarm plenum cables	
	CL4P	Class 4 plenum cables	
	CL3P	Class 3 plenum cables	
	CL2P	Class 2 plenum cables	
	OFNP	Nonconductive optical fiber plenum cables	
	OFCP	Conductive optical fiber plenum cables	
Riser limited-energy cables	CMR	Communications riser cables	
	-	CATVR	Community antenna television riser cables
		BLR	Network-powered broadband communications low-power riser cables
		FPLR	Power-limited fire alarm riser cables
		CL4R	Class 4 riser cables
		CL3R	Class 3 riser cables
		CL2R	Class 2 riser cables
		OFNR	Nonconductive optical fiber riser cables
		OFCR	Conductive optical fiber riser cables
General-purpose limited-energy cables	CMG, CM	Communications general-purpose cables	
	-	CATV	Community antenna television general-purpose cables
		BL	Network-powered broadband communications low-power general-purpose cables
		FPL	Power-limited fire alarm general-purpose cables
		CL4	Class 4 general-purpose cables
		PLTC	Power-limited tray cables
		CL3	Class 3 general-purpose cables
		CL2	Class 2 general-purpose cables
		OFNG, OFN	Nonconductive optical fiber general-purpose cables
		OFCG, OFC	Conductive Optical Fiber general-purpose cables
Limited-use limited-energy cables	CMX	Communications limited use cables	
	-	CATVX	Community antenna television limited use cables
		BLX	Network-powered broadband communications low-power limited use cables
		CL3X	Class 3 limited use cables
		CL2X	Class 2 limited use cables
Specialty use limited-energy cables	CMUC	Under-carpet communications wires and cables	

(A) General.

Unless prohibited by this section, plenum, riser, general-purpose, and limited-use limited-energy cables shall be permitted to be installed in the same raceway, cable tray, box, enclosure, or cable routing assembly. Installations shall comply with 722.112(B) through 722.112(H).

(B) Two or More Class 2, Class 3, or Class 4 Circuits.

Conductors of two or more limited energy circuits of the same class shall be permitted within the same limited energy cable.

(C) (C) Class 2, Class 3, and Class 4 Circuits with the Same Limited Energy Cable.

(1) Class 3 Cables.

Class 2 circuits shall be permitted to use listed Class 3 cables.

(2) Dual-Listed Class 3/Class 4 Cables.

Class 2 and Class 3 circuits shall be permitted to use dual-listed Class 3/Class 4 cables.

(D) Class 2 and Class 3 Circuits with Communications Circuits.

(1) Communications Cables.

Conductors of one or more Class 2 or Class 3 circuits shall be permitted in the same cable with conductors of communications circuits. The cable shall be listed as a communications cable.

(2) Composite Cables.

Cables constructed of individually listed Class 2, Class 3, and communications cables under a common jacket shall be permitted to be classified and listed as communications cables. The fire resistance rating of the composite cable shall be determined by the combustion characteristics of the composite cable.

(E) Class 2, Class 3, or Class 4 Cables with Other Limited Energy Cables.

(1) Limited-Use Cables.

Plenum, riser, general-purpose, and limited use limited energy cables shall be permitted in the same enclosure or raceway.

(2) Other Than Limited-Use Cables.

Plenum, riser, and general-purpose limited energy cables shall be permitted in the same enclosure, cable tray, raceway, or cable routing assembly.

(F) Power-Limited Fire Alarm Circuits.

(1) Multiple PLFA Circuits.

Cable and conductors of two or more power-limited fire alarm circuits shall be permitted within the same cable, enclosure, cable tray, raceway, or cable routing assembly.

(2) With Network-Powered Broadband.

Low-power network-powered broadband communications circuits shall be permitted in the same enclosure, cable tray, raceway, or cable routing assembly with PLFA cables.

(3) With Class 2 Circuits.

Conductors of one or more Class 2 circuits shall be permitted within the same cable, enclosure, cable tray, raceway, or cable routing assembly with conductors of power-limited fire alarm circuits if the insulation of the Class 2 circuit conductors in the cable, enclosure, raceway, or cable routing assembly is at least that required by the power-limited fire alarm circuits.

(4) With Class 3 or Communications Circuits.

Cable and conductors of Class 3 and communications circuits shall be permitted within the same cable, enclosure, cable tray, raceway, or cable routing assembly with cables and conductors of power-limited fire alarm circuits.

(5) With 4 Circuits.

Class 4 circuits shall be permitted in the same cable with power-limited fire alarm circuits if the cable is dual-listed.

(6) Audio System Circuits and PLFA Circuits.

Audio system circuits described in 640.9(C) and installed using Class 2, Class 3, or Class 4 wiring methods in compliance with 722.136 shall not be installed in the same cable, cable tray, raceway, or cable routing assembly with PLFA circuits or cables.

(G) Manholes.

Outside plant communications, CATV, and optical fiber cables shall be permitted to be installed together in manholes.

Informational Note: See IEEE C2-2023, *National Electrical Safety Code,* Rules 323 and 341 for information on cable installation in manholes.

(H) Limited-Use and Under-Carpet Limited-Energy Cables.

Limited-use and under-carpet limited-energy cables shall not be installed in cable trays or cable routing assemblies.

722.113 Limited-Energy Circuits with Electric Light, Power, Class 1, Non-Power-Limited Fire Alarm, and Medium-Power Network-Powered Broadband Communications Circuits in Raceways, Compartments, and Boxes.

Separation shall be provided in accordance with 722.112(A) for limited energy cables and conductors, except as provided in 722.164 for optical fiber cables.

(A) General.

Limited energy cables shall be separated by at least 50 mm (2 in.) from conductors of any electric light, power, Class 1, non-power-limited fire alarm, or medium-power network-powered broadband communications circuits and shall not be placed the same raceway, compartment, enclosure, manhole, outlet box, device box, or similar, unless permitted by the 722.113(A)(1) through 722.113(A)(10).

Exception: Low-power and medium-power network-powered broadband communications circuit cables shall be permitted in the same raceway, cable tray, box, enclosure, or cable routing assembly.

(1) Separated by Barriers.

Limited energy cables shall be permitted to be placed in any raceway, compartment, outlet box, junction box, or other enclosure with conductors of electric light, power, Class 1, non-power-limited fire alarm, or medium-power network-powered broadband communications circuits if the conductors of electric light, power, Class 1, non-power-limited fire alarm, and medium-power network-powered broadband communications circuits are separated from the limited energy and cables by a permanent barrier that maintains the 50 mm (2 in.) separation or a listed divider.

(2) Raceways Within Enclosures.

Limited energy cables shall be permitted to share the same enclosure with other systems if the limited energy cables are separated by a raceway within the enclosure.

(3) Associated Systems Within Enclosures.

Limited energy cables shall be permitted to be placed in outlet boxes, junction boxes, compartments, or similar with power conductors where such conductors are introduced solely for power supply to the limited energy equipment and 722.113(A)(3)(a) or 722.113(A)(3)(b) applies.

(a) The power circuit conductors shall be routed within the enclosure to maintain a minimum 6 mm (0.25 in.) separation from the limited energy cables.

(b) The circuit conductors operate at 150 volts or less to ground and the limited energy circuit conductors shall be either of the following:

(3) <u>Installed as a Class 1 circuit</u>

(4) <u>A limited energy cable of CL3, CL3R, CL3P or a permitted substitute and the conductors that emerge from the cable jacket are separated by a minimum 6 mm (0.25 in.) or by a nonconductive barrier from all other conductors</u>

(4) Enclosures with Single Opening.

Circuit conductors of limited energy cables entering compartments, enclosures, device boxes, outlet boxes, or similar shall be permitted to be installed with Class 1, non-power-limited fire alarm, and medium-power network-powered broadband communications circuits where they are introduced solely to connect the equipment connected to the limited energy circuits. If the limited energy circuit conductors must enter an enclosure that is provided with a single opening, they shall be permitted to enter through a single fitting (such as a tee) if the conductors are separated from the conductors of the other circuits by a continuous and firmly fixed nonconductor, such as flexible tubing.

(5) Elevators.

(a) *Traveling Cables*. Separation of circuits shall not be required in elevator traveling cables constructed in accordance with 620.36.

(b) *Hoistways*. In hoistways, cables shall be installed in rigid metal conduit, rigid nonmetallic conduit, intermediate metal conduit, liquidtight flexible nonmetallic conduit, or electrical metallic tubing. For elevators or similar equipment, these conductors shall be permitted to be installed as provided in 620.21.

(6) In Raceways or Cables.

Separation shall not be required if either of the following applies:

(a) The conductors of electric light, power, Class 1, non-power-limited fire alarm, and medium-power network-powered broadband communications circuits are in a raceway or in metal-sheathed, metal-clad, nonmetallic-sheathed, Type AC or Type UF cables.

(b) The limited energy cable conductors are installed in a raceway or in metal-sheathed, metal-clad, nonmetallic-sheathed, Type TC, or Type UF cables.

(7) Protected by Firmly Fixed Nonconductors.

Separation shall not be required if the limited energy cables are permanently separated from the conductors of electric light, power, Class 1, non-power-limited fire alarm, and medium-power network-powered broadband communications circuits by a continuous and firmly fixed nonconductor, such as porcelain tubes or flexible tubing, in addition to the insulation on the wire.

(8) Manholes.

Underground limited energy circuit conductors and cables in a manhole shall be permitted to be installed with Class 1, non-power-limited fire alarm, and medium-power network-powered broadband communications circuits if one of the following conditions is met:

(1) The electric light, power, Class 1, non-power-limited fire alarm, and medium-power network-powered broadband communications circuit conductors are in a metal-enclosed cable or Type UF cable.

(2) The limited energy circuit conductors are permanently and effectively separated from the conductors of other circuits by a continuous and firmly fixed nonconductor, such as flexible tubing, in addition to the insulation or covering on the wire.

(3) The limited energy circuit conductors are permanently and effectively separated from conductors of the other circuits and securely fastened to racks, insulators, or other approved supports.

(9) Cable Trays.

Limited energy circuit conductors shall be permitted to be installed in cable trays if the conductors of the electric light, Class 1, and non-power-limited fire alarm circuits are separated by a solid fixed barrier of a material compatible with the cable tray or if the limited energy circuits are installed in Type MC cable.

(10) If Protected.

Limited energy circuits shall be permitted to be installed together with the conductors of electric light, power, Class 1, non-power-limited fire alarm, and medium-power network-powered broadband communications circuits if they are functionally associated and installed using Class 1 wiring methods in accordance with 724.46.

Part III. Limited-Energy Cables and Wiring Methods.

722.120 Application and Installation of Limited Energy Cables in Buildings.

The application and installation of limited-energy cables shall comply with Table 722.120.

Table 722.120 Applications of Limited-Energy Cables

Applications		Cable Type[1]						
		Plenum	Riser	General-Purpose	Limited-Use	Under Carpet	PLTC	
In ducts specifically fabricated for environmental air as described in 720.22(C)[2]	Cables in lengths as short as practicable to perform the required function	Y	N	N	N	N	N	
	In metal raceway that complies with 720.22(B)	Y	Y	Y	Y	N	Y	
In other spaces used for environmental air (plenums) as described in 720.22(C)	Cables in other spaces used for environmental air	Y	N	N	N	N	N	
	Cables in metal raceway that complies with 720.22(C)	Y	Y	Y	Y	N	Y	
	Cables in plenum communications raceways	Y	N	N	N	N	N	
	-	Cables in plenum cable routing assemblies	Y	N	N	N	N	N
	-	Cables supported by open metal cable trays	Y	N	N	N	N	N
	-	Cables, or cables installed in raceways or cable routing assemblies supported by solid bottom metal cable trays with solid metal covers	Y	Y	Y	Y	N	Y
In risers and vertical runs	Cables in vertical runs penetrating one or more floors and in vertical runs in a shaft	Y	Y	N	N	N	N	
	-	Cables in metal raceways	Y	Y	Y	Y	N	Y
	-	Cables in fireproof shafts	Y	Y	Y	N	N	Y
	-	Cables in plenum communications raceways	Y	Y	N	N	N	N
	-	Cables in plenum cable routing assemblies	Y	Y	N	N	N	N
	-	Cables in riser communications raceways	Y	Y	N	N	N	N
	-	Cables in riser cable routing assemblies	Y	Y	N	N	N	N
	-	Cables in one- and two-family dwellings	Y	Y	Y	Y[3]	N	Y
Cables and innerducts installed in metal raceways in a riser having firestops at each floor[2]	Cables	Y	Y	Y	Y	N	Y	
	Cables in plenum communications raceways (innerduct)	Y	Y	Y	Y	N	Y	
	Cables in riser communications raceways (innerduct)	Y	Y	Y	Y	N	Y	
	Cables in general-purpose communications raceways (innerduct)	Y	Y	Y	Y	N	Y	
In fireproof riser shafts having firestops at each floor[2]	Cables	Y	Y	Y	N	N	Y	
	Cables in plenum communications raceways or plenum cable routing assemblies	Y	Y	Y	N	N	Y	
	Cables in riser communications raceways or riser cable routing assemblies	Y	Y	Y	N	N	Y	
	-	Cables in general-purpose communications raceways or general-purpose cable routing assemblies	Y	Y	Y	N	N	Y
In cable trays	Outdoors	N	N	N	N	N	Y	
	Cables, or cables in plenum, riser, or general-purpose communications raceways, installed indoors	Y	Y	Y	N	N	Y	
In cross-connect arrays	Cables, and cables in plenum, riser, or general-purpose communications raceways or cable routing assemblies	Y	Y	Y	N	N	Y	
In one-, two-, and multifamily dwellings, and in building locations other than the locations covered above	Cables	Y	Y	Y	Y[3]	N	Y	
	Cables in plenum, riser, or general-purpose communications raceways or cable routing assemblies, or raceways recognized in Chapter 3	Y	Y	Y	Y	N	Y	
	-	Cables in nonconcealed spaces	Y	Y	Y	Y[4]	Y	Y
	-	Under carpet, floor covering, modular flooring, and planks	N	N	N	N	Y	N

[1]"N" indicates that the cable type shall not be installed in the application. "Y" indicates that the cable type shall be permitted to be installed in the application, subject to any limitations described in this article or the articles described in 722.4(C).

[2]In 720.22(B), cables shall be permitted in ducts specifically fabricated for environmental air only if directly associated with the air distribution system.

[3]Limited-use cable shall be permitted to be installed only in one-, two-, and multifamily dwellings and only if the cable is smaller in diameter than 6.35 mm (0.25 in.).

[4]The exposed length of cable shall not exceed 3.05 m (10 ft).

722.121 Installations.

(A) Industrial Establishments.

In industrial establishments where the conditions of maintenance and supervision ensure that only qualified persons service the installation, Type PLTC cable shall be permitted in accordance with either of the following:

(1) Where the cable is not subject to physical damage, Type PLTC cable that complies with the crush and impact requirements of Type MC cable and is identified as Type PLTC-ER for such use shall be permitted to be exposed between the cable tray and the utilization equipment or device. The cable shall be continuously supported and protected against physical damage using mechanical protection such as dedicated struts, angles, or channels. The cable shall be supported and secured at intervals not exceeding 1.8 m (6 ft). Where not subject to physical damage, Type PLTC-ER cable shall be permitted to transition between cable trays and between cable trays and utilization equipment or devices for a distance not to exceed 1.8 m (6 ft) without continuous support. The cable shall be mechanically supported where exiting the cable tray to ensure that the minimum bending radius is not exceeded.

(2) Type PLTC cable, with a metallic sheath or armor in accordance with 722.100(A)(6), shall be permitted to be installed exposed. The cable shall be continuously supported and protected against physical damage using mechanical protection such as dedicated struts, angles, or channels. The cable shall be secured at intervals not exceeding 1.8 m (6 ft).

722.122 Limited-Energy Cable Substitutions.

The substitutions for cables listed in Table 722.120 and illustrated in Figure 722.122 shall be permitted. Where substitute cables are installed, the installation requirements of the articles described in 722.4 shall also apply. CI cables shall be permitted to be installed to provide 2-hour circuit integrity. See 722.180(A).

Informational Note: See 722.100 for information on Types CMP, CMR, CM, and CMX.

Table 722.122 Permitted Limited-Energy Cable Substitutions

Cable Type	Permitted Substitutions
CL3P	CMP
CL2P	CMP, CL3P
CL3R	CMP, CL3P, CMR
CL2R	CMP, CL3P, CL2P, CMR, CL3R
PLTC	None
CL3	CMP, CL3P, CMR, CL3R, CMG, CM, PLTC
CL2	CMP, CL3P, CL2P, CMR, CL3R, CL2R, CMG, CM, PLTC, CL3
CL3X	CMP, CL3P, CMR, CL3R, CMG, CM, PLTC, CL3, CMX
CL2X	CMP, CL3P, CL2P, CMR, CL3R, CL2R, CMG, CM, PLTC, CL3, CL2, CMX, CL3X
FPLP	CMP
FPLR	CMP, FPLP, CMR
FPL	CMP, FPLP, CMR, FPLR, CMG, CM
OFNP	None
OFCP	OFNP
OFNR	OFNP
OFCR	OFNP, OFCP, OFNR
OFNG, OFN	OFNP, OFNR
OFCG, OFC	OFNP, OFCP, OFNR, OFCR, OFNG, OFN
CMUC	None

Figure 722.122 Limited-Energy and Communications Cable Substitution Hierarchy.

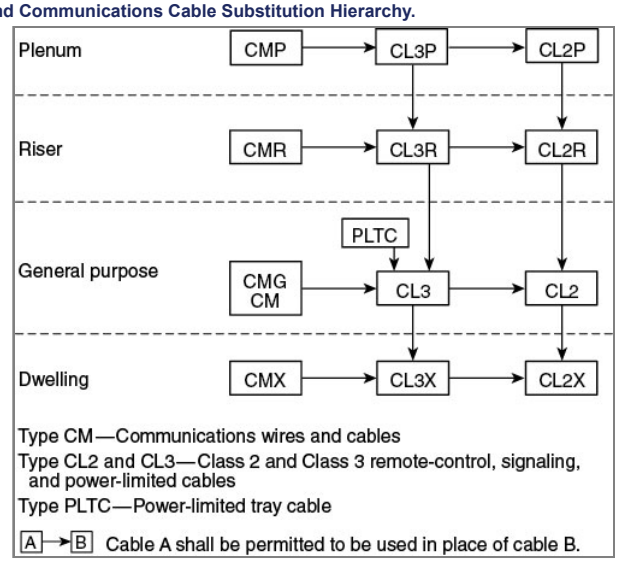

Part IV. Communications Cables and Wiring Methods.

722.130 Application of Cables Used for Communications Circuits, Communications Wires, Cables, and Raceways and Listed Cable Routing Assemblies.

Permitted and nonpermitted applications of listed communications wires and cables, coaxial cables, network-powered broadband communications system cables shall be in accordance with Table 722.130.

The permitted applications shall be subject to the installation requirements of 722.110.

Table 722.130 Applications of Listed Communications Wires, Cables, Listed CATV-Type Coaxial Cables, and Listed Network-Powered Broadband Communications Cables in Buildings

Applications		Wire and Cable Type									
		Plenum	Riser	BMR	General-Purpose	BM	Limited-Use	Under-carpet	BMU, BLU	Hybrid Power and Communications Cables	Communications Wires
In ducts specifically fabricated for environmental air as described in 720.22(B)	In fabricated ducts	Y	N	N	N	N	N	N	N	N	N
	In metal raceway that complies with 720.22(B)	Y	Y	Y	Y	Y	Y	N	N	N	Y
In other spaces used for environmental air (plenums) as described in 720.22(C)	In other spaces used for environmental air	Y	N	N	N	N	N	N	N	N	N
	In metal raceway that complies with 720.22(C)	Y	Y	Y	Y	Y	Y	N	N	N	Y
	-	In plenum communications raceways	Y	N	N	N	N	N	N	N	N
	-	In plenum cable routing assemblies	Y	N	N	N	N	N	N	N	N
	-	Supported by open metal cable trays	Y	N	N	N	N	N	N	N	N
	-	Supported by solid bottom metal cable trays with solid metal covers	Y	Y	Y	Y	Y	Y	N	N	N
In risers	In vertical runs	Y	Y	Y	N	N	N	N	N	N	N
	-	In metal raceways	Y	Y	Y	Y	Y	Y	N	N	N
	-	In fireproof shafts	Y	Y	Y	Y	Y	Y	N	N	N
	-	In plenum communications raceways	Y	Y	N	N	N	N	N	N	N
	-	In plenum cable routing assemblies	Y	Y	N	N	N	N	N	N	N
	-	In riser communications raceways	Y	Y	N	N	N	N	N	N	N
	-	In riser cable routing assemblies	Y	Y	N	N	N	N	N	N	N
	-	In one- and two-family dwellings	Y	Y	Y	Y	Y	Y	N	N	Y
Within buildings in other than air-handling spaces and risers	General	Y	Y	Y	Y	Y	Y	N	N	N	N
	In one- and two-family dwellings	Y	Y	Y	Y	Y	Y	Y	N	Y	N
	In multifamily dwellings	Y	Y	Y	Y	Y	Y	Y	N	N	N
	-	In nonconcealed spaces	Y	Y	Y	Y	Y	Y	Y	N	N
	-	Supported by cable trays	Y	Y	Y	Y	Y	N	N	N	N
	-	Under carpet, modular flooring, and planks	N	N	N	N	N	N	Y	N	N
	-	In distributing frames and cross-connect arrays	Y	Y	N	Y	N	N	N	N	N

Applications		Wire and Cable Type										
		Plenum	Riser	BMR	General-Purpose	BM	Limited-Use	Under-carpet	BMU, BLU	Hybrid Power and Communications Cables	Communications Wires	
	-	In rigid metal conduit (RMC) and intermediate metal conduit (IMC)	Y	Y	Y	Y	Y	Y	Y	Y	Y	Y
	-	In any raceway recognized in Chapter 3	Y	Y	Y	Y	Y	Y	N	N	N	Y
	-	In plenum communications raceways	Y	Y	N	Y	N	N	N	N	N	Y
	-	In plenum cable routing assemblies	Y	Y	N	Y	N	N	N	N	N	Y
	-	In riser communications raceways	Y	Y	N	Y	N	N	N	N	N	Y
	-	In riser cable routing assemblies	Y	Y	N	Y	N	N	N	N	N	Y
	-	In general-purpose communications raceways	Y	Y	N	Y	N	N	N	N	N	Y
	-	In general-purpose cable routing assemblies	Y	Y	N	Y	N	N	N	N	N	Y

Note: An “N” in the table indicates that the cable type shall not be installed in the application. A “Y” indicates that the cable type shall be permitted to be installed in the application subject to the limitations described in 722.131. The Riser column includes all riser cables except BMR, and the General-Purpose column includes all general-purpose cables except BM.

Informational Note No. 1: Table 722.110 covers the applications of listed communications wires, cables, and raceways in buildings.

Informational Note No. 2: See 722.131(B) for restrictions to the installation of communications cables in fabricated ducts.

722.131 Installation of Cables Used for Communications Circuits, Communications Wires, Cable Routing Assemblies, and Communications Raceways.

(A) General.

Installation of cables used for communications circuits, communications wires, cable routing assemblies, and communications raceways shall comply with 722.131(A) through 722.131(L). Installation of cable routing assemblies and communications raceways shall comply also with 722.110. Types of cables used by this section shall be identified in Table 722.131(A).

Table 722.131(A) Cables Used for Communications Circuits

-	Listed Cable Types
Plenum cables	CMP, CATVP, BLP, OFNP, OFCP
Riser cables	CMR, CATVR, BMR, BLR, OFNR, OFCR
General-purpose cables	CMG, CM, CATV, BM, BL, OFNG, OFN, OFCG, OFC
Limited-use cables	CMX, CATVX, BLX
Under-carpet	CMUC
Underground	BMU, BLU

(B) Ducts Specifically Fabricated for Environmental Air.

Installations of cables used for communications circuits, communications wires, cable routing assemblies, and communications raceways in ducts specifically fabricated for environmental air shall be in accordance with 722.131(B)(1) and 722.131(B)(2).

(1) Uses Permitted.

The following cables shall be permitted in ducts specifically fabricated for environmental air as described in 720.22(B) if they are directly associated with the air distribution system:

(1) Plenum cables up to 1.22 m (4 ft) in length

(2) Plenum, rise, general-purpose, and limited-use cables installed in raceways that are installed in compliance with 720.22(B)

(2) Uses Not Permitted.

The following cables, wires, cable routing assemblies, and communications raceways shall not be permitted in ducts specifically fabricated for environmental air as described in 720.22(B):

(1) Plenum, riser, and general-purpose communications raceways

(2) Plenum, riser, and general-purpose cable routing assemblies

(3) Riser, general-purpose, and limited-use cables

(4) Type CMUC cables and wires

(5) Types BMU and BLU cables

(6) Communications wires

(7) Hybrid power and communications cables

Informational Note: See NFPA 90A-2024, *Standard for the Installation of Air-Conditioning and Ventilating Systems*, for information on fire protection of wiring installed in fabricated ducts.

(C) Other Spaces Used for Environmental Air (Plenums).

Installations of cables used for communications circuits, communications wires, cable routing assemblies, and communications raceways in other spaces used for environmental air (plenums) shall be in accordance with 722.131(C)(1) and 722.131(C)(2).

(1) Uses Permitted.

The following cables, wires, cable routing assemblies, and communications raceways shall be permitted in other spaces used for environmental air as described in 720.22(C):

(1) Plenum cables

(2) Plenum communications raceways

(3) Plenum cable routing assemblies

(4) Plenum cables installed in plenum communications raceways

(5) Plenum cables installed in plenum cable routing assemblies

(6) Plenum cables and plenum communications raceways supported by open metal cable tray systems

(7) Plenum, riser, general-purpose, and limited-use cables, and communications wires installed in raceways that are installed in compliance with 720.22(C)

(8) Plenum, riser, general-purpose, limited-use cables and plenum, riser, and general-purpose communications raceways supported by solid bottom metal cable trays with solid metal covers in other spaces used for environmental air (plenums) as described in 720.22(C)

(9) Plenum, riser, general-purpose, and limited-use cables installed in plenum, riser, and general-purpose communications raceways supported by solid bottom metal cable trays with solid metal covers in other spaces used for environmental air (plenums) as described in 720.22(C)

(2) Uses Not Permitted.

The following cables, wires, cable routing assemblies, and communications raceways shall not be permitted in other spaces used for environmental air as described in 720.22(C):

(1) Riser, general-purpose, and limited-use cables

(2) Riser and general-purpose communications raceways

(3) Riser and general-purpose cable routing assemblies

(4) Type CMUC cables and wires

(5) Types BMR, BM, BMU, and BLU cables

(6) Communications wires

(7) Hybrid power and communications cables

Informational Note: See NFPA 90A-2024, *Standard for the Installation of Air-Conditioning and Ventilating Systems*, for information on fire protection of wiring installed in other spaces used for environmental air.

(D) Risers — Cables, Cable Routing Assemblies, and Communications Raceways in Vertical Runs.

Installations of cables used for communications circuits, communications wires, cable routing assemblies, and communications raceways in risers shall be in accordance with 722.131(D)(1) and 722.131(D)(2).

(1) Uses Permitted.

The following cables, cable routing assemblies, and communications raceways shall be permitted in vertical runs penetrating one or more floors and in vertical runs in a shaft:

(1) Plenum and riser cables

(2) Plenum and riser communications raceways

(3) Plenum and riser cable routing assemblies

(4) Plenum and riser cables installed in the following:

(5) Plenum communications raceways

(6) Riser communications raceways

(7) Plenum cable routing assemblies

(8) Riser cable routing assemblies

(2) Uses Not Permitted.

The following cables, wires, cable routing assemblies, and communications raceways shall not be permitted in risers:

(1) General-purpose and limited-use cables

(2) General-purpose communications raceways

(3) General-purpose cable routing assemblies

(4) Type CMUC cables and wires

(5) Types BMR, BM, BMU, and BLU cables

(6) Communications wires

(7) Hybrid power and communications cables

Informational Note: See 720.21 for firestop requirements for floor penetrations.

(E) Risers — Cables and Innerducts in Metal Raceways.

Installations of cables used for communications circuits, communications wires, cable routing assemblies, and communications raceways in metal raceways in a riser having firestops at each floor shall be in accordance with 722.131(E)(1) and 722.131(E)(2).

(1) Uses Permitted.

The following cables and innerducts shall be permitted in metal raceways in a riser having firestops at each floor:

(1) Plenum, riser, general-purpose, and limited-use cables

(2) Plenum, riser, and general-purpose communications raceways (innerduct)

(3) Plenum, riser, general-purpose, and limited-use cables installed in the following:

(4) Plenum communications raceways (innerduct)

(5) Riser communications raceways (innerduct)

(6) General-purpose communications raceways (innerduct)

(2) Uses Not Permitted.

The following cables, wires, cable routing assemblies, and communications raceways shall not be permitted in metal raceways in a riser having firestops at each floor:

(1) Plenum, riser, and general-purpose cable routing assemblies

(2) Type CMUC cables and wires

(3) Types BMR, BM, BMU, and BLU cables

(4) Communications wires

(5) Hybrid power and communications cables

Informational Note: See 720.21 for firestop requirements for floor penetrations.

(F) Risers — Cables, Cable Routing Assemblies, and Communications Raceways in Fireproof Shafts.

Installations of cables used for communications circuits, communications wires, cable routing assemblies, and communications raceways in fireproof riser shafts having firestops at each floor shall be in accordance with 722.131(F)(1) and 722.131(F)(2).

(1) Uses Permitted.

The following cables, cable routing assemblies, and communications raceways shall be permitted to be installed in fireproof riser shafts having firestops at each floor:

(1) Plenum, riser, general-purpose, and limited-use cables

(2) Plenum, riser, and general-purpose communications raceways

(3) Plenum, riser, and general-purpose cable routing assemblies

(4) Plenum, riser, general-purpose, and limited-use cables installed in the following:

(5) Plenum communications raceways

(6) Riser communications raceways

(7) General-purpose communications raceways

(8) Plenum cable routing assemblies

(9) Riser cable routing assemblies

(10) General-purpose cable routing assemblies

(2) Uses Not Permitted.

The following cables, wires, cable routing assemblies, and communications raceways shall not be permitted in metal raceways in fireproof riser shafts having firestops at each floor:

(1) Type CMUC cables and wires

(2) Type BMU and BLU cables

(3) Communications wires

(4) Hybrid power and communications cables

Informational Note: See 720.21 for firestop requirements for floor penetrations.

(G) Risers — One- and Two-Family Dwellings.

Installations of cables used for communications circuits, communications wires, cable routing assemblies, and communications raceways in risers in one- and two-family dwellings shafts shall be in accordance with 722.131(G)(1) and 722.131(G)(2).

(1) Uses Permitted.

The following cables, cable routing assemblies, and communications raceways shall be permitted in one- and two-family dwellings:

(1) Plenum, riser, and general-purpose cables

(2) Limited-use cables less than 6 mm (0.25 in.) in diameter

(3) Plenum, riser, and general-purpose communications raceways

(4) Plenum, riser, and general-purpose cable routing assemblies

(5) Plenum, riser, and general-purpose cables installed in the following:

(6) Plenum communications raceways

(7) Riser communications raceways

(8) General-purpose communications raceways

(9) Plenum cable routing assemblies

(10) Riser cable routing assemblies

(11) General-purpose cable routing assemblies

(2) Uses Not Permitted.

The following cables and wires shall not be permitted in risers in one- and two-family dwellings:

(1) Type CMUC cables and wires

(2) Type BMU and BLU cables

(3) Communications wires

(4) Hybrid power and communications cables

(H) Cable Trays.

Installations of cables used for communications circuits, communications wires, cable routing assemblies, and communications raceways supported by cable trays shall be in accordance with 722.131(H)(1) and 722.131(H)(2).

(1) Uses Permitted.

The following wires, cables, and communications raceways shall be permitted to be supported by cable trays:

(1) Plenum, riser, and general-purpose cables

(2) Plenum, riser, and general-purpose communications raceways

(3) Communications wires, plenum, riser, and general-purpose cables installed in the following:

(4) Plenum communications raceways

(5) Riser communications raceways

(6) General-purpose communications raceways

(2) Uses Not Permitted.

The following cables and wires shall not be supported by cable trays:

(1) Limited-use cables

(2) Type CMUC cables and wires

(3) Type BMU and BLU cables

(4) Communications wires

(5) Hybrid power and communications cables

(I) Distributing Frames and Cross-Connect Arrays.

Installations of cables used for communications circuits, communications wires, cable routing assemblies, and communications raceways in distributing frames and cross-connect arrays shall be in accordance with 722.131(I)(1) and 722.131(I)(2).

(1) Uses Permitted.

The following wires, cables, cable routing assemblies, and communications raceways shall be permitted to be installed in distributing frames and cross-connect arrays:

(1) Plenum, riser, general-purpose cables, and communications wires

(2) Plenum, riser, and general-purpose communications raceways

(3) Plenum, riser, and general-purpose cable routing assemblies

(4) Communications wires, plenum, riser, and general-purpose cables installed in the following:

(5) Plenum communications raceways

(6) Riser communications raceways

(7) General-purpose communications raceways

(8) Plenum cable routing assemblies

(9) Riser cable routing assemblies

(10) General-purpose cable routing assemblies

(2) Uses Not Permitted.

The following cables and wires shall not be installed in distributing frames and cross-connect arrays:

(1) Types BMR, BM, BMU, and BLU cables

(2) Limited-use cables

(3) Type CMUC cables and wires

(4) Hybrid power and communications cables

(J) Other Building Locations.

Installations of cables used for communications circuits, cable communications wires, routing assemblies, and communications raceways in building locations other than those covered in 722.131(B) through 722.131(I) shall be in accordance with 722.131(J)(1) and 722.131(J)(2).

(1) Uses Permitted.

The following wires, cables, cable routing assemblies, and communications raceways shall be permitted to be installed in building locations other than the locations covered in 722.131(B) through 722.131(I):

(1) Plenum, riser, and general-purpose cables

(2) Limited-use cables with a maximum of 3 m (10 ft) of exposed length in nonconcealed spaces

(3) Plenum, riser, and general-purpose communications raceways

(4) Plenum, riser, and general-purpose cable routing assemblies

(5) Communications wires, plenum, riser, and general-purpose cables installed in the following:

(6) Plenum communications raceways

(7) Riser communications raceways

(8) General-purpose communications raceways

(9) Plenum, riser, and general-purpose cables installed in the following:

(10) Plenum cable routing assemblies

(11) Riser cable routing assemblies

(12) General-purpose cable routing assemblies

(13) Communications wires and plenum, riser, general-purpose, and limited-use cables installed in raceways recognized in Chapter 3

(14) Type CMUC under-carpet communications wires and cables installed under carpet, modular flooring, and planks.

(2) Uses Not Permitted.

The following cables, wires, cable routing assemblies, and communications raceways shall not be installed in building locations other than the locations covered in 722.131(B) through 722.131(I):

(1) Types BMU and BLU cables

(2) Communications wires

(3) Hybrid power and communications cables

(K) Multifamily Dwellings.

Installations of cables used for communications circuits, communications wires, cable routing assemblies, and communications raceways in multifamily dwellings shall be in accordance with 722.131(K)(1) and 722.131(K)(2).

(1) Uses Permitted.

The following cables, cable routing assemblies, and communications raceways shall be permitted to be installed in multifamily dwellings in locations other than the locations covered in 722.131(B) through 722.131(G):

(1) Plenum, riser, and general-purpose cables

(2) Limited-use cables less than 6 mm (0.25 in.) in diameter in nonconcealed spaces

(3) Plenum, riser, and general-purpose communications raceways

(4) Plenum, riser, and general-purpose cable routing assemblies

(5) Communications wires and plenum, riser, and general-purpose cables installed in the following:

(6) Plenum communications raceways

(7) Riser communications raceways

(8) General-purpose communications raceways

(9) Plenum, riser, and general-purpose cables installed in the following:

(10) Plenum cable routing assemblies

(11) Riser cable routing assemblies

(12) General-purpose cable routing assemblies

(13) Communications wires and plenum, riser, general-purpose, and limited-use cables installed in raceways recognized in Chapter 3

(14) Type CMUC under-carpet communications wires and cables installed under carpet, modular flooring, and planks

(2) Uses Not Permitted.

The following cables, cable routing assemblies, and communications raceways shall not be installed in multifamily dwellings in locations other than the locations covered in 722.131(B) through 722.131(G):

(1) Types BMU and BLU cables

(2) Communications wires

(3) Hybrid power and communications cable.

(L) One- and Two-Family Dwellings.

Installations of cables used for communications circuits, communications wires, cable routing assemblies, and communications raceways in one- and two-family dwellings in locations other than those covered in 722.131(B) through 722.131(F) shall be in accordance with 722.131(L)(1) and 722.131(L)(2).

(1) Uses Permitted.

The following wires, cables, cable routing assemblies, and communications raceways shall be permitted to be installed in one- and two-family dwellings in locations other than the locations covered in 722.131(B) through 722.131(F):

(1) Plenum, riser, and general-purpose cables

(2) Limited-use cables less than 6 mm (0.25 in.) in diameter

(3) Plenum, riser, and general-purpose communications raceways

(4) Plenum, riser, and general-purpose cable routing assemblies

(5) Communications wires and plenum, riser, and general-purpose cables installed in the following:

(6) Plenum communications raceways

(7) Riser communications raceways

(8) General-purpose communications raceways

(9) Plenum, riser, and general-purpose cables installed in the following:

(10) Plenum cable routing assemblies

(11) Riser cable routing assemblies

(12) General-purpose cable routing assemblies

(13) Communications wires and plenum, riser, general-purpose, and limited-use cables installed in raceways recognized in Chapter 3

(14) Type CMUC under-carpet communications wires and cables installed under carpet, modular flooring, and planks

(15) Hybrid power and communications cable listed in accordance 722.100

(2) Uses Not Permitted.

The following cables, wires, cable routing assemblies, and communications raceways shall not be installed in one- and two-family dwellings in locations other than those covered in 722.131(B) through 722.131(F):

(1) Types BMU and BLU cables

(2) Communications wires

722.132 Permitted Substitutions of Listed Cables Used for Communications Circuits and Communications Wires.

(A) Permitted Substitutions of Listed Communications Cables.

The substitutions for communications cables listed in Table 722.132(A) and illustrated in Figure 722.132(A) shall be permitted.

Table 722.132(A) Listed Communications Cable Substitutions

Cable Type	Permitted Substitutions
CMR	CMP
CMG, CM	CMP, CMR
CMX	CMP, CMR, CMG, CM

Figure 722.132(A) Listed Communications Cable Substitution Hierarchy.

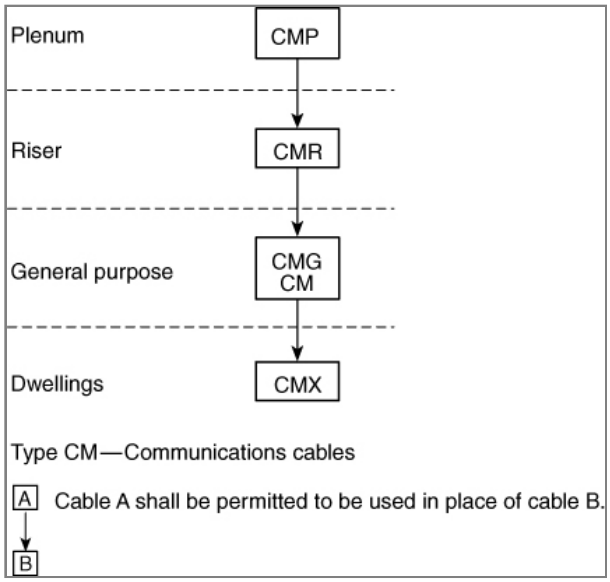

722.133 Installation of Communications Wires and Cables and CATV-Type Coaxial Cables.

Installation of communications wires and cables, from the protector to the equipment, or where no protector is required, communications wires and cables attached to the outside or inside of the building, shall comply with 722.133(A) and 722.133(B). Installation of CATV-type coaxial cables, beyond the point of grounding as defined in 750.48, shall comply with 722.133(A) through 722.133(C).

(A) In Raceways, Cable Trays, Boxes, Cables, Enclosures, and Cable Routing Assemblies.

(1) Other Circuits.

Communications cables and CATV-type coaxial cables shall be permitted in the same raceway, cable tray, box, enclosure, or cable routing assembly together and with jacketed cables of any of the following:

(1) Class 2 and Class 3 remote-control, signaling, and power-limited circuits in compliance with 645.6(E)(2) or Article 725, Parts I and II

(2) Power-limited fire alarm systems in compliance with Article 760, Parts I and III

(3) Nonconductive and conductive optical fiber cables in compliance with Article 722, Parts I and III

(4) Communications circuits in compliance with Article 722, Parts I and III

(5) Community antenna television and radio distribution systems in compliance with Article 722, Parts I and III

(6) Low-power network-powered broadband communications circuits in compliance with Article 722, Parts I and III

(2) Class 2 and Class 3 Circuits.

Class 1 circuits shall not be run in the same cable with communications circuits. Class 2 and Class 3 circuit conductors shall be permitted in the same listed communications cable with communications circuits.

(3) Electric Light, Power, Class 1, Non-Power-Limited Fire Alarm, and Medium-Power Network-Powered Broadband Communications Circuits in Raceways, Compartments, and Boxes.

Communications wires and cables and CATV-type coaxial cables shall not be placed in any raceway, compartment, outlet box, junction box, or similar fitting with conductors of electric light, power, Class 1, non-power-limited fire alarm, or medium-power network-powered broadband communications circuits.

Exception No. 1: Communications wires and cables and CATV-type coaxial cables shall be permitted to be placed in any raceway, compartment, outlet box, junction box, or other enclosures with conductors of electric light, power, Class 1, non-power-limited fire alarm, or medium-power network-powered broadband communications circuits where all of the conductors of electric light, power, Class 1, non-power-limited fire alarm, and medium-power network-powered broadband communications circuits are separated from all of the communications wires and cables and CATV-type coaxial cables by a permanent barrier or listed divider.

Exception No. 2: Communications wires and cables and CATV-type coaxial cables shall be permitted to be placed in outlet boxes, junction boxes, or similar fittings or compartments with power conductors where such conductors are introduced solely for power supply to the communications and coaxial cable system distribution equipment. The power circuit conductors shall be routed within the enclosure to maintain a minimum 6 mm (¼ in.) separation from the communications wires and cables and the CATV-type coaxial cables.

Exception No. 3: Separation of circuits shall not be required in elevator traveling cables constructed in accordance with by 620.36.

(B) Other Applications.

Communications wires and cables and CATV-type coaxial cables shall be separated at least 50 mm (2 in.) from conductors of any electric light, power, Class 1, non-power-limited fire alarm, or medium-power network-powered broadband communications circuits.

Exception No. 1: Separation shall not be required where either of the following applies: (1) All of the conductors of electric light, power, Class 1, non-power-limited fire alarm, and medium-power network-powered broadband communications circuits are in a raceway or in metal-sheathed, metal-clad, nonmetallic-sheathed, Type AC, or Type UF cables. (2) All of the communications wires and cables and all of the CATV-type coaxial cables are encased in raceway.

Exception No. 2: Separation shall not be required where the communications wires and cables and CATV-type coaxial cables are permanently separated from the conductors of electric light, power, Class 1, non-power-limited fire alarm, and medium-power network-powered broadband communications circuits by a continuous and firmly fixed nonconductor, such as porcelain tubes or flexible tubing, in addition to the insulation on the wire.

(C) Support of Communications Wires and Cables and CATV-Type Coaxial Cables.

Raceways shall be used for their intended purpose. Communications wires and cables and CATV-type coaxial cables shall not be strapped, taped, or attached by any means to the exterior of any raceway as a means of support.

Exception: Overhead (aerial) spans of communications drop wires, communications cables, and CATV-type coaxial cables shall be permitted to be attached to the exterior of a raceway-type mast intended for the attachment and support of such wires and cables.

(D) Permitted Substitutions of Listed Coaxial Type CATV Cables.

The substitutions for coaxial cables in Table 722.133(D) and illustrated in Figure 722.133(D) shall be permitted.

Informational Note: The substitute cables in Table 722.133(D) and Figure 722.133(D) are only coaxial-type cables.

Table 722.133(D) Permitted Substitutions of Listed Coaxial Type CATV Cables

Cable Type	Permitted Substitutions
CATVP	CMP, BLP
CATVR	CATVP, CMP, CMR, BMR, BLP, BLR
CATV	CATVP, CMP, CATVR, CMR, CMG, CM, BMR, BM, BLP, BLR, BL
CATVX	CATVP, CMP, CATVR, CMR, CATV, CMG, CM, BMR, BM, BLP, BLR, BL, BLX

Figure 722.133(D) Listed Coaxial Type CATV Cables Permitted Substitution Hierarchy.

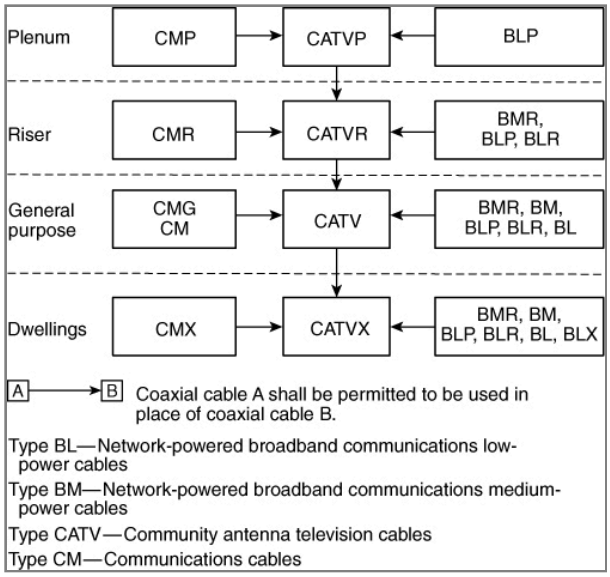

(E) Dwelling Unit Communications Outlet.

For new construction, a minimum of one communications outlet shall be installed with the dwelling in a readily accessible area and cabled to the service provider demarcation point.

722.134 Installation of Network-Powered Broadband Communications Cables and Equipment.

Cable and equipment installations within buildings shall comply with 722.134(A) through 722.134(C), as applicable.

(A) Separation of Conductors.

(1) In Raceways, Cable Trays, Boxes, Enclosures, and Cable Routing Assemblies.

(a) *Low- and Medium-Power Network-Powered Broadband Communications Circuit Cables.* Low- and medium-power network-powered broadband communications cables shall be permitted in the same raceway, cable tray, box, enclosure, or cable routing assembly.

(b) *Low-Power Network-Powered Broadband Communications Circuit Cables with Other Circuits.* Low-power network-powered broadband communications cables shall be permitted in the same raceway, cable tray, box, enclosure, or cable routing assembly with jacketed cables of any of the following circuits:

(3) Class 2 and Class 3 remote-control, signaling, and power-limited circuits in compliance with Article 725 , Parts I and II

(4) Power-limited fire alarm systems in compliance with Article 760 , Parts I and III

(5) Communications circuits in compliance with Article 722 , Parts I and III

(6) Nonconductive and conductive optical fiber cables in compliance with Article 722 , Parts I and III

(7) Community antenna television and radio distribution systems in compliance with Article 722 , Parts I and III

(h) *Medium-Power Network-Powered Broadband Communications Circuit Cables with Optical Fiber Cables and Other Communications Cables.* Medium-power network-powered broadband communications cables shall not be permitted in the same raceway, cable tray, box, enclosure, or cable routing assembly with conductors of any of the following circuits:

(9) Communications circuits in compliance with Article 722 , Parts I and III

(10) Conductive optical fiber cables in compliance with Article 722 , Parts I and III

(11) Community antenna television and radio distribution systems in compliance with Article 722 , Parts I and III

(l) *Medium-Power Network-Powered Broadband Communications Circuit Cables with Other Circuits.* Medium-power network-powered broadband communications cables shall not be permitted in the same raceway, cable tray, box, enclosure, or cable routing assembly with conductors of any of the following circuits:

(13) Class 2 and Class 3 remote-control, signaling, and power-limited circuits in compliance with Article 725 , Parts I and II

(14) Power-limited fire alarm systems in compliance with Article 760 , Parts I and III

(o) *Electric Light, Power, Class 1, Nonpowered Broadband Communications Circuit Cables.* Network-powered broadband communications cable shall not be placed in any raceway, cable tray, compartment, outlet box, junction box, or similar fittings with conductors of electric light, power, Class 1, or non-power-limited fire alarm circuit cables.

Exception No. 1: Network-powered broadband communications cable shall be permitted to be placed in a raceway, cable tray, compartment, outlet box, junction box, or similar fittings with conductors of electric light, power, Class 1, or non-power-limited fire alarm circuit cables where all of the conductors of electric light, power, Class 1, non-power-limited fire alarm circuits are separated from all of the network-powered broadband communications cables by a permanent barrier or listed divider.

Exception No. 2: Where power circuit conductors are installed in in outlet boxes, junction boxes, or similar fittings or compartments where such conductors are introduced solely for power supply to the network-powered broadband communications system distribution equipment, the power circuit conductors shall be routed within the enclosure to maintain a minimum 6 mm (¼ in.) separation from network-powered broadband communications cables.

(2) Other Applications.

Network-powered broadband communications cable shall be separated at least 50 mm (2 in.) from conductors of any electric light, power, Class 1, and non-power-limited fire alarm circuits.

Exception No. 1: Separation shall not be required where either of the following applies:

(1) All of the conductors of electric light, power, Class 1, and non-power-limited fire alarm circuits are in a raceway or in metal-sheathed, metal-clad, nonmetallic-sheathed, Type AC, or Type UF cables.

(2) All of the network-powered broadband communications cables are encased in a raceway.

Exception No. 2: Separation shall not be required where the network-powered broadband communications cables are permanently separated from the conductors of electric light, power, Class 1, and non-power-limited fire alarm circuits by a continuous and firmly fixed nonconductor, such as porcelain tubes or flexible tubing, in addition to the insulation on the wire.

(B) Support of Network-Powered Broadband Communications Cables.

Raceways shall be used for their intended purpose. Network-powered broadband communications cables shall not be strapped, taped, or attached by any means to the exterior of any conduit or raceway as a means of support.

(C) Splicing of Medium-Powered Network-Powered Communications Cables.

Where a medium-powered network-powered broadband communications cable is spliced or extended, a listed junction box or listed patch panel shall be used.

(D) Bends.

Bends in network broadband cable shall be made so as not to damage the cable. The radius of the curve of the inner edge of any bend shall not be less than 10 times the diameter of the cable.

Informational Note: See ANSI/TIA-568.0-E, *Generic Telecommunications Cabling for Customer Premises*, for information on bend radii of network broadband cable during different types of installation conditions.

722.135 Underground Network-Powered Broadband Communications Cables Entering Buildings.

Underground network-powered broadband communications cables entering buildings shall comply with 722.135(A) and 722.135(B).

(A) Protection from Physical Damage.

Direct-buried cable, conduit, or other raceways shall be installed to meet the minimum cover requirements of Table 722.135(A). In addition, direct-buried cables emerging from the ground shall be protected by enclosures, raceways, or other approved means extending from the minimum cover distance required by Table 830.47(A) below grade to a point at least 2.5 m (8 ft) above finished grade. In no case shall the protection be required to exceed 450 mm (18 in.) below finished grade. Types BMU and BLU direct-buried cables emerging from the ground shall be installed in rigid metal conduit (RMC), intermediate metal conduit (IMC), rigid nonmetallic conduit, or other approved means extending from the minimum cover distance required by Table 830.47(A) below grade to the point of entrance.

Exception: Protection from physical damage shall not be required if a low-power network-powered broadband communications circuit is equipped with a listed fault protection device that is located on the network side of the network-powered broadband cable being protected and the device is appropriate to the network-powered broadband communications cable used.

Table 722.135(A) Network-Powered Broadband Communications Systems Minimum Cover Requirements.

Location of Wiring Method or Circuit	Direct Burial Cables		Rigid Metal Conduit (RMC) or Intermediate Metal Conduit (IMC)		Nonmetallic Raceways Listed for Direct Burial; Without Concrete Encasement or Other Approved Raceways	
	mm	in.	mm	in.	mm	in.
All locations not specified below	450	18	150	6	300	12
In trench below 50 mm (2 in.) thick concrete or equivalent	300	12	150	6	150	6
Under a building (in raceway only)	0	0	0	0	0	0
Under minimum of 100 mm (4 in.) thick concrete exterior slab with no vehicular traffic and the slab extending not less than 150 mm (6 in.) beyond the underground installation	300	12	100	4	100	4
One- and two-family dwelling driveways and outdoor parking areas and used only for dwelling-related purposes	300	12	300	12	300	12

Notes:

1. Cover shall be the shortest distance measured between a point on the top surface of any direct-buried cable, conduit, or other raceway and the top surface of finished grade, concrete, or similar cover.

2. Raceways approved for burial only where concrete encased shall require a concrete envelope not less than 50 mm (2 in.) thick.

3. Lesser depths shall be permitted where cables rise for terminations or splices or where access is otherwise required.

4. Where solid rock is encountered, all wiring shall be installed in metal or nonmetallic raceway permitted for direct burial. The raceways shall be covered by a minimum of 50 mm (2 in.) of concrete extending down to rock.

(B) Pools.

Cables located under the pool or within the area extending 1.5 m (5 ft) horizontally from the inside wall of the pool shall meet those clearances and requirements specified in 680.11.

722.136 Permitted Substitutions of Network-Powered Broadband Communications System Cables.

The substitutions for network-powered broadband system cables listed in Table 722.136 shall be permitted.

Table 722.136 Permitted Substitutions of Network-Powered Broadband Communications System Cables.

Cable Type	Permitted Cable Substitutions
BM	BMR
BLP	CMP, CL3P
BLR	CMP, CL3P, CMR, CL3R, BLP, BMR
BL	CMP, CMR, CM, CMG, CL3P, CL3R, CL3, BMR, BM, BLP, BLR
BLX	CMP, CMR, CM, CMG, CMX, CL3P, CL3R, CL3, CL3X, BMR, BM, BLP, BRP, BL

Part V. Class 2 or Class 3 Cables and Wiring Methods.

722.140 Applications, Installations and Wiring Methods for Class 2 or Class 3 Circuits.

(A) General.

Class 2 and Class 3 circuits on the load side of the power source shall be permitted to be installed using wiring methods and materials in accordance with 722.140(A), 722.140(B), or a combination of both.

(1) Class 1 Wiring Methods and Materials.

Use of Class 1 wiring methods for Class 2 and Class 3 circuits shall be permitted. Separation from electric light, power, Class 1, non-power-limited fire alarm circuit conductors, and medium-power network-powered broadband communications cables shall comply with 725.136.

Exception: The ampacity adjustment factors given in 310.15(C)(1) shall not apply.

(2) Class 2 and Class 3 Wiring Methods and Materials.

Conductors on the load side of the power source shall be insulated in accordance with 722.100 and 722.102 and be installed in accordance with 722.110, 722.140(B), and 725.136.

Exception No. 1: As provided for in 620.21 for elevators and similar equipment.

Exception No. 2: Other wiring methods and materials installed in accordance with 725.3 shall be permitted to extend or replace the conductors and cables described in 722.100(A) and permitted by 722.140(A)(2).

Exception No. 3: Bare Class 2 conductors shall be permitted as part of a listed intrusion protection system where installed in accordance with the listing instructions for the system.

(B) Cables Transmitting Power and Data.

(1) Classification of Circuits.

Circuits carrying data and power shall be classified as electrical power circuits in accordance with the type of electrical power carried.

Exception: PoE circuits shall be classified as communications and Class 2 or Class 3.

(2) Bundling of Cables Transmitting Power and Data.

Sections 722.140(B)(1) and 722.140(B)(2) shall apply to Class 2 and Class 3 circuits that transmit power and data to a powered device over listed cabling. Section 720.30 and Article 725, Parts I and III shall apply to Class 2 and Class 3 circuits that transmit power and data. The conductors that carry power for the data circuits shall be copper. The current in the power circuit shall not exceed the current limitation of the connectors.

Informational Note No. 1: One example of the use of cables that transmit power and data is the connection of closed-circuit TV cameras (CCTV).

Informational Note No. 2: The 8P8C connector is in widespread use with powered communications systems. IEC 60603-7-2008, Connectors for electronic equipment — Part 7-1: Detail specification for 8-way, unshielded, free and fixed connectors, specifies these connectors to have a current-carrying capacity per contact of 1.0 amperes maximum at 60°C (149°F). See IEC 60603-7 for more information on current-carrying capacity at higher and lower temperatures.

Informational Note No. 3: The requirements of Table 722.140(B)(4) were derived for carrying power and data over 4-pair copper balanced twisted pair cabling. ANSI/TIA 568-C.2-2009, Commercial Building Telecommunications Cabling Standard — Part 2: Balanced Twisted-Pair Telecommunications Cabling and Components, describes this type of cabling.

Informational Note No. 4: See TIA-TSB-184-A-2017, Guidelines for Supporting Power Delivery Over Balanced Twisted-Pair Cabling, for information on installation and management of balanced twisted pair cabling supporting power delivery.

Informational Note No. 5: See ANSI/NEMA C137.3-2017, American National Standard for Lighting Systems — Minimum Requirements for Installation of Energy Efficient Power over Ethernet (PoE) Lighting Systems, for information on installation of cables for PoE lighting systems.

Informational Note No. 6: Rated current for power sources covered in 722.130 is the output current per conductor the power source is designed to deliver to an operational load at normal operating conditions, as declared by the manufacturer. In the design of these systems, the actual current in a given conductor might vary from the rated current per conductor by as much as 20 percent. An increase in current in one conductor is offset by a corresponding decrease in current in one or more conductors of the same cable.

(3) Use of 4-Pair Class 2 or Class 3 Cables to Transmit Power and Data.

Where Type CL3P, Type CL2P, Type CL3R, Type CL2R, Type CL3, or Type CL2 4-pair cables transmit power and data, the rated current per conductor of the power source shall not exceed the ampacities in Table 722.140(B) at an ambient temperature of 30°C (86°F). For ambient temperatures above 30°C (86°F), the correction factors in Table 310.15(B)(1)(1) or in Equation 310.15(B) shall apply.

Exception: Compliance with Table 722.140(B) shall not be required for installations where conductors are 24 AWG or larger and the rated current per conductor of the power source does not exceed 0.3 amperes.

Informational Note: One example of the use of Class 2 cables is a network of closed-circuit TV cameras using 24 AWG, 60°C (140°F) rated, Type CL2R, Category 5e balanced twisted-pair cabling.

(4) Use of Class 2-LP or Class 3-LP Cables to Transmit Power and Data.

Type CL3P-LP, Type CL2P-LP, Type CL3R-LP, Type CL2R-LP, Type CL3-LP, or Type CL2-LP cables shall be permitted to supply power to equipment from a power source with a rated current per conductor up to the marked current limit located immediately following the suffix "-LP" and shall be permitted to transmit data to the equipment. Where the number of bundled LP cables is 192 or less and the selected ampacity of the cables in accordance with Table 722.140(B)(4) exceeds the marked current limit of the cable, the ampacity determined from the table shall be permitted to be used. For ambient temperatures above 30°C (86°F), the correction factors of Table 310.15(B)(1)(1) or Equation 310.15(B) shall apply. The Class 2-LP and Class 3-LP cables shall comply with the following, as applicable:

(1) Cables with the suffix "-LP" shall be permitted to be installed in bundles, raceways, cable trays, communications raceways, and cable routing assemblies.

(2) Cables with the suffix "-LP" and a marked current limit shall follow the substitution hierarchy of 722.122 for the cable type without the suffix "-LP" and without the marked current limit.

(3) System design shall be permitted by qualified persons under engineering supervision.

Informational Note: An example of the marking on a 23 AWG, 4-pair, Class 2 cable rated 75°C (167°F) with an LP current rating of 0.6 amperes per conductor is "CL2-LP(0.6A) 75°C 23 AWG 4-pair". See 722.100(A)(9).

Table 722.140(B)(4) Ampacities of Each Conductor in Amperes in 4-Pair Class 2 or Class 3 Balanced Twisted-Pair Cables Based on Copper Conductors at an Ambient Temperature of 30°C (86°F) with All Conductors in All Cables Carrying Current, 60°C (140°F), 75°C (167°F), and 90°C (194°F) Rated Cables

AWG	Number of 4-Pair Cables in a Bundle																	
	1–7			8–19			20–37			38–61			62–91			92–192		
	Temperature Rating			Temperature Rating			Temperature Rating			Temperature Rating			Temperature Rating			Temperature Rating		
	60°C	75°C	90°C	60°C	75°C	90°C	60°C	75°C	90°C	60°C	75°C	90°C	60°C	75°C	90°C	60°C	75°C	90°C
26	1	1.23	1.42	0.71	0.87	1.02	0.55	0.68	0.78	0.46	0.57	0.67	0.45	0.55	0.64	NA	NA	NA
24	1.19	1.46	1.69	0.81	1.01	1.17	0.63	0.78	0.91	0.55	0.67	0.78	0.46	0.56	0.65	0.4	0.48	0.55
23	1.24	1.53	1.78	0.89	1.11	1.28	0.77	0.95	1.1	0.66	0.8	0.93	0.58	0.71	0.82	0.45	0.55	0.63
22	1.5	1.86	2.16	1.04	1.28	1.49	0.77	0.95	1.11	0.66	0.82	0.96	0.62	0.77	0.89	0.53	0.63	0.72

Notes:

1. For bundle sizes over 192 cables, or for conductor sizes smaller than 26 AWG, ampacities shall be permitted to be determined by qualified personnel under engineering supervision.

2. Where only half of the conductors in each cable are carrying current, the values in the table shall be permitted to be increased by a factor of 1.4.

Informational Note No. 1: Elevated cable temperatures can reduce a cable's data transmission performance. For information on practices for 4-pair balanced twisted pair cabling, see TIA-TSB-184-A, *Guidelines for Supporting Power Delivery Over Balanced Twisted-Pair Cabling*, and ANSI/TIA-568-C., *Balanced Twisted-Pair Telecommunications Cabling and Components Standard*, 6.4.7, 6.6.3, and Annex G, which provide guidance on adjustments for operating temperatures between 20°C and 60°C (68°F and 140°F).

Informational Note No. 2: The per-contact current rating of connectors can limit the maximum allowable current below the ampacity shown in Table 722.140.

Part VI. Class 4 Cables and Wiring Methods.

722.150 Applications, Installations, and Wiring Methods for Class 4 Circuit Cables.

(A) Applications.

Class 4 cables shall not be permitted for any application that is not part of a Class 4 system.

Exception: Use of Class 4 cable for other applications shall be permitted if the cable has been listed as suitable for other applications.

(B) Installation in Dwelling Units.

Where Class 4 cables are used in a dwelling unit, 722.150(C) shall apply.

(C) Ampacity.

The ampacity of Class 4 cables shall comply with 720.6(B)(1) based on the temperature rating of the Class 4 cable for conductors sized 16 AWG to 6 AWG. For conductors sized 24 AWG to 17 AWG, the Class 4 cable shall have an ampacity in accordance with the marking FMP-XXA, where XX is the maximum ampacity permitted. In a dwelling unit(s), not more than 20 current- carrying conductors shall be installed without maintaining spacing.

Informational Note No. 1: See 722.100(A)(16) for additional Class 4 cable requirements.

Informational Note No. 2: See UL 1400-1-2022, *Outline of Investigation for Fault-Managed Power Systems — Part 1: General Requirements*, and UL 1400-2-2023, *Outline of Investigation for Fault-Managed Power Systems — Part 2: Requirements for Class 4 Cables*, for information on determining maximum ampacities.

Part VII. Optical Fiber Cables and Wiring Methods.

722.160 Applications of Listed Optical Fiber Cables.

Permitted and nonpermitted applications of listed optical fiber cables shall be as indicated in Table 722.160. The permitted applications shall be subject to the installation requirements of 722.161 and 722.162. The substitutions for optical fiber cables in Table 722.165 and illustrated in Figure 722.165 shall be permitted.

Table 722.160 Applications of Listed Optical Fiber Cables in Buildings

Applications		Listed Optical Fiber Cable Type		
		OFNP, OFCP	OFNR, OFCR	OFNG, OFCG, OFN, OFC
In ducts specifically fabricated for environmental air as described in 720.22(B).	In fabricated ducts	Y	N	N
	In metal raceway that complies with 720.22(B)	Y	Y	Y
In other spaces used for environmental air (plenums) as described in 720.22(C)	In other spaces used for environmental air	Y	N	N
	-	In metal raceway that complies with 720.22(C)	Y	Y	Y
	-	In plenum communications raceways	Y	N	N
	-	In plenum cable routing assemblies	Y	N	N
	-	Supported by open metal cable trays	Y	N	N
	-	Supported by solid bottom metal cable trays with solid metal covers	Y	Y	Y
In risers	In vertical runs	Y	Y	N
	In metal raceways	Y	Y	Y
	In fireproof shafts	Y	Y	Y
	In plenum communications raceways	Y	Y	N
	In plenum cable routing assemblies	Y	Y	N
	In riser communications raceways	Y	Y	N
	In riser cable routing assemblies	Y	Y	N
	In one- and two-family dwellings	Y	Y	Y
Within buildings in other than air-handling spaces and risers	General	Y	Y	Y
	-	Supported by cable trays	Y	Y	Y
	-	In distributing frames and cross-connect arrays	Y	Y	Y
	-	In any raceway recognized in Chapter 3	Y	Y	Y
	-	In plenum communications raceway	Y	Y	Y
	-	In plenum cable routing assemblies	Y	Y	Y
	-	In riser communications raceways	Y	Y	Y
	-	In riser cable routing assemblies	Y	Y	Y
	-	In general-purpose communications raceways	Y	Y	Y
	-	In general-purpose cable routing assemblies	Y	Y	Y

Note: “N” indicates that the cable type shall not be permitted to be installed in the application. “Y” indicates that the cable type shall be permitted to be installed in the application subject to the limitations described in 722.161 and 722.162.

Informational Note No. 1: Article 722, Part III of covers installation methods within buildings. Table 722.160 covers the applications of listed optical fiber cables in buildings. The definition of *point of entrance* is in Article 100.

Informational Note No. 2: For information on the restrictions to the installation of optical fiber cables in ducts specifically fabricated for environmental air, see 722.161(B).

722.161 Installation of Optical Fiber Cables.

Installation of optical fiber cables shall comply with 722.161(A) through 722.161(H). Installation of raceways and cable routing assemblies shall comply with 722.110.

(A) Ducts Specifically Fabricated for Environmental Air.

Installations of optical fiber cables in ducts specifically fabricated for environmental air shall be in accordance with 722.161(A)(1) and 722.161(A)(2).

(1) Uses Permitted.

The following cables shall be permitted in ducts specifically fabricated for environmental air as described in 720.22(B) if they are directly associated with the air distribution system:

(1) Up to 1.22 m (4 ft) of Types OFNP and OFCP

(2) Types OFNP, OFCP, OFNR, OFCR, OFNG, OFCG, OFN, and OFC installed in raceways that are installed in compliance with 722.162

Informational Note: See NFPA 90A-2024, *Standard for the Installation of Air-Conditioning and Ventilating Systems*, for information on fire protection of wiring installed in fabricated ducts.

(2) Uses Not Permitted.

Types OFNR, OFCR, OFNG, OFCG, OFN, and OFC shall not be permitted to be installed in ducts specifically fabricated for environmental air as described in 720.22(B).

Informational Note: See NFPA 90A-2024, *Standard for the Installation of Air-Conditioning and Ventilating Systems*, for information on fire protection of wiring installed in fabricated ducts.

(B) Other Spaces Used for Environmental Air (Plenums).

Installations of optical fiber cables in other spaces used for environmental air shall be in accordance with 722.161(B)(1) and 722.161(B)(2).

(1) Uses Permitted.

The following cables shall be permitted in other spaces used for environmental air as described in 720.22(C):

(1) Types OFNP and OFCP

(2) Types OFNP and OFCP installed in plenum communications raceways

(3) Types OFNP and OFCP installed in plenum cable routing assemblies

(4) Types OFNP and OFCP supported by open metal cable tray systems

(5) Types OFNP, OFCP, OFNR, OFCR, OFNG, OFCG, OFN, and OFC installed in raceways that are installed in compliance with 720.22(C)

(6) Types OFNP, OFCP, OFNR, OFCR, OFNG, OFCG, OFN, and OFC supported by solid bottom metal cable trays with solid metal covers in other spaces used for environmental air (plenums), as described in 720.22(C)

(7) Types OFNP, OFCP, OFNR, OFCR, OFNG, OFCG, OFN, and OFC installed in plenum riser and general-purpose communications raceways supported by solid bottom metal cable trays with solid metal covers in other spaces used for environmental air (plenums), as described in 720.22(C)

(2) Risers — Cables in Vertical Runs.

Types OFNR, OFCR, OFNG, OFCG, OFN, and OFC shall not be permitted to be installed in other spaces used for environmental air (plenums).

Informational Note: See NFPA 90A-2024, *Standard for the Installation of Air-Conditioning and Ventilating Systems*, for information on fire protection of wiring installed in other spaces used for environmental air.

(C) Risers — Cables in Vertical Runs.

Installations of optical fiber cables in other spaces used for environmental air shall be in accordance with 722.161(B)(1) and 722.161(B)(2).

(1) Uses Permitted.

The following cables shall be permitted in vertical runs penetrating one or more floors and in vertical runs in a shaft:

(1) Types OFNP, OFCP, OFNR, and OFCR

(2) Types OFNP, OFCP, OFNR, and OFCR installed in the following:

(3) Plenum communications raceways

(4) Plenum cable routing assemblies

(5) Riser communications raceways

(6) Riser cable routing assemblies

(2) Uses Not Permitted.

Types OFNG, OFCG, OFN, and OFC shall not be permitted to be installed in vertical runs.

Informational Note: See 770.26 for firestop requirements for floor penetrations.

(D) Risers — Cables Permitted in Metal Raceways.

The following cables and innerducts shall be permitted in metal raceways in a riser having firestops at each floor:

(1) Types OFNP, OFCP, OFNR, OFCR, OFNG, OFCG, OFN, and OFC

(2) Types OFNP, OFCP, OFNR, OFCR, OFNG, OFCG, OFN, and OFC installed in the following:

(3) Plenum communications raceways (innerduct)

(4) Riser communications raceways (innerduct)

(5) General-purpose communications raceways (innerduct)

Informational Note: See 770.26 for firestop requirements for floor penetrations.

(E) Risers — Cables Permitted in Fireproof Shafts.

The following cables shall be permitted to be installed in fireproof riser shafts having firestops at each floor:

(1) Types OFNP, OFCP, OFNR, OFCR, OFNG, OFCG, OFN, and OFC

(2) Types OFNP, OFCP, OFNR, OFCR, OFNG, OFCG, OFN, and OFC installed in the following:

(3) Plenum communications raceways

(4) Plenum cable routing assemblies

(5) Riser communications raceways

(6) Riser cable routing assemblies

(7) General-purpose communications raceways

(8) General-purpose cable routing assemblies

Informational Note: See 770.26 for firestop requirements for floor penetrations.

(F) Risers — Cables Permitted in One- and Two-Family Dwellings.

The following cables shall be permitted in one- and two-family dwellings:

(1) Types OFNP, OFCP, OFNR, OFCR, OFNG, OFCG, OFN, and OFC

(2) Types OFNP, OFCP, OFNR, OFCR, OFNG, OFCG, OFN, and OFC installed in the following:

(3) Plenum communications raceways

(4) Plenum cable routing assemblies

(5) Riser communications raceways

(6) Riser cable routing assemblies

(7) General-purpose communications raceways

(8) General-purpose cable routing assemblies

(G) Cable Trays — Cables Permitted.

The following cables shall be permitted to be supported by cable trays:

(1) Types OFNP, OFCP, OFNR, OFCR, OFNG, OFCG, OFN, and OFC

(2) Types OFNP, OFCP, OFNR, OFCR, OFNG, OFCG, OFN, and OFC installed in the following:

(3) Plenum communications raceways

(4) Riser communications raceways

(5) General-purpose communications raceways

(H) Distributing Frames and Cross-Connect Arrays — Cables Permitted.

The following cables shall be permitted to be installed in distributing frames and cross-connect arrays:

(1) Types OFNP, OFCP, OFNR, OFCR, OFNG, OFCG, OFN, and OFC

(2) Types OFNP, OFCP, OFNR, OFCR, OFNG, OFCG, OFN, and OFC installed in the following:

(3) Plenum communications raceways

(4) Plenum cable routing assemblies

(5) Riser communications raceways

(6) Riser cable routing assemblies

(7) General-purpose communications raceways

(8) General-purpose cable routing assemblies

(I) Other Building Locations — Cables Permitted.

The following cables shall be permitted to be installed in building locations other than the locations covered in 722.161(A) through 722.161(G):

(1) Types OFNP, OFCP, OFNR, OFCR, OFNG, OFCG, OFN, and OFC

(2) Types OFNP, OFCP, OFNR, OFCR, OFNG, OFCG, OFN, and OFC installed in the following:

(3) Plenum communications raceways

(4) Plenum cable routing assemblies

(5) Riser communications raceways

(6) Riser cable routing assemblies

(7) General-purpose communications raceways

(8) General-purpose cable routing assemblies

(9) Types OFNP, OFCP, OFNR, OFCR, OFNG, OFCG, OFN, and OFC installed in a raceway of a type recognized in Chapter 3

722.162 Installation of Optical Fiber Cables in Raceways, Cable Routing Assemblies, and Cable Trays.

(A) Types of Raceways.

Optical fiber cables shall be permitted to be installed in any raceway that complies with either 722.162(A)(1) or 722.162(A)(2).

(1) Communications Raceways.

Optical fiber cables shall be permitted to be installed in listed communications raceways selected in accordance with Table 722.110(A).

(2) Other Recognized Raceways.

Optical fiber cables shall be permitted to be installed in raceways recognized by and installed in accordance with Chapter 3.

(B) Raceway Fill for Optical Fiber Cables.

Raceway fill for optical fiber cables shall comply with either 722.162(B)(1) or 722.162(B)(2).

(1) Without Electric Light or Power Conductors.

Where optical fiber cables are installed in a raceway without electric light or power conductors, the raceway fill requirements of Chapters 3 and 9 shall not apply.

(2) Nonconductive Optical Fiber Cables with Electric Light or Power Conductors.

Where nonconductive optical fiber cables are installed with electric light or power conductors in a raceway, the raceway fill requirements of Chapters 3 and 9 shall apply.

(C) Cable Routing Assemblies.

Optical fiber cables shall be permitted to be installed in listed cable routing assemblies selected in accordance with Table 722.110(B).

(D) Cable Trays.

Optical fiber cables shall be permitted to be installed in metal or listed nonmetallic cable tray systems.

722.163 Installation of Optical Fiber Cable in Innerduct.

Listed plenum communications raceways, listed riser communications raceways, and listed general-purpose communications raceways selected in accordance with Table 722.110(A) shall be permitted to be installed as innerduct in any type of listed raceway permitted in Chapter 3.

722.164 Installation of Optical Fibers and Electrical Conductors.

(A) In Cable Trays and Raceways.

Conductive optical fiber cables contained in an armored or metal-clad-type sheath and nonconductive optical fiber cables shall be permitted to occupy the same cable tray or raceway with conductors for electric light, power, Class 1, non-power-limited fire alarm, Type ITC, or medium-power network-powered broadband communications circuits operating at 1000 volts or less. Conductive optical fiber cables without an armored or metal-clad-type sheath shall not be permitted to occupy the same cable tray or raceway with conductors for electric light, power, Class 1, non-power-limited fire alarm, Type ITC, or medium-power network-powered broadband communications circuits, unless all of the conductors of electric light, power, Class 1, non-power-limited fire alarm, and medium-power network-powered broadband communications circuits are separated from all of the optical fiber cables by a permanent barrier or listed divider.

(B) In Cabinets, Outlet Boxes, and Similar Enclosures.

Nonconductive optical fiber cables shall not be permitted to occupy the same cabinet, outlet box, panel, or similar enclosure housing the electrical terminations of an electric light, power, Class 1, non-power-limited fire alarm, or medium-power network-powered broadband communications circuit unless one or more of the following conditions exist:

(1) The nonconductive optical fiber cables are functionally associated with the electric light, power, Class 1, non-power-limited fire alarm, or medium-power network-powered broadband communications circuit.

(2) The conductors for electric light, power, Class 1, non-power-limited fire alarm, Type ITC, or medium-power network-powered broadband communications circuits operate at 1000 volts or less.

(3) The nonconductive optical fiber cables and the electrical terminations of electric light, power, Class 1, non-power-limited fire alarm, or medium-power network-powered broadband communications circuit are installed in factory- or field-assembled control centers.

(4) The nonconductive optical fiber cables are installed in an industrial establishment where conditions of maintenance and supervision ensure that only qualified persons service the installation.

When optical fibers are within the same hybrid cable for electric light, power, Class 1, non-power-limited fire alarm, or medium-power network-powered broadband communications circuits operating at 1000 volts or less, they shall be permitted to be installed only where the functions of the optical fibers and the electrical conductors are associated.

Optical fibers in hybrid optical fiber cables containing only current-carrying conductors for electric light, power, or Class 1 circuits rated 1000 volts or less shall be permitted to occupy the same cabinet, cable tray, outlet box, panel, raceway, or other termination enclosure with conductors for electric light, power, or Class 1 circuits operating at 1000 volts or less.

Optical fibers in hybrid optical fiber cables containing current-carrying conductors for electric light, power, or Class 1 circuits rated over 1000 volts shall be permitted to occupy the same cabinet, cable tray, outlet box, panel, raceway, or other termination enclosure with conductors for electric light, power, or Class 1 circuits in industrial establishments, where conditions of maintenance and supervision ensure that only qualified persons service the installation.

(C) With Other Circuits.

Conductive and nonconductive optical fiber cables shall be permitted in the same raceway, cable tray, box, enclosure, or cable routing assembly, with conductors of any of the following:

(1) Class 2 and Class 3 remote-control, signaling, and power-limited circuits in compliance with 645.6(E)(2) or Article 725, Parts I and II

(2) Power-limited fire alarm systems in compliance with Article 760, Parts I and III

(3) Communications circuits in compliance with Article 805, Parts I and V

(4) Community antenna television and radio distribution systems in compliance with Article 820, Parts I and V

(5) Low-power network-powered broadband communications circuits in compliance with Article 830, Parts I and V

(D) Support of Optical Fiber Cables.

Raceways shall be used for their intended purpose. Optical fiber cables shall not be strapped, taped, or attached by any means to the exterior of any conduit or raceway as a means of support.

Exception: Overhead (aerial) spans of optical fiber cables shall be permitted to be attached to the exterior of a raceway-type mast intended for the attachment and support of such cables.

722.165 Permitted Substitutions of Listed Optical Fiber Cables.

The substitutions for optical fiber cables in Table 722.165 and illustrated in Figure 722.165 shall be permitted.

Table 722.165 Permitted Substitutions of Listed Optical Fiber Cable

Cable Type	Permitted Substitutions
OFNP	None
OFCP	OFNP
OFNR	OFNP
OFCR	OFNP, OFCP, OFNR
OFNG, OFN	OFNP, OFNR
OFCG, OFC	OFNP, OFCP, OFNR, OFCR, OFNG, OFN

Figure 722.165 Cable Substitution Hierarchy.

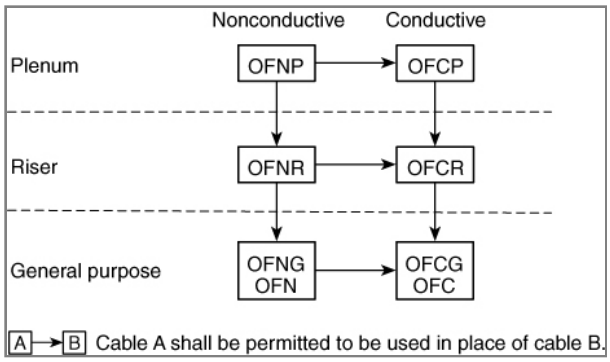

722.166 Overhead (Aerial) Optical Fiber Cables.

Overhead optical fiber cables containing a non-current-carrying metallic member entering buildings shall comply with 722.166(A) and 722.166(B).

(A) On Poles and In-Span.

Where outside plant optical fiber cables and electric light or power conductors are supported by the same pole or are run parallel to each other in-span, the conditions described in 722.166(A)(1) through 722.166(A)(4) shall be met.

(1) Relative Location.

Where practicable, the outside plant optical fiber cables shall be located below the electric light or power conductors.

(2) Attachment to Cross-Arms.

Attachment of outside plant optical fiber cables to a cross-arm that carries electric light or power conductors shall not be permitted.

(3) Climbing Space.

The climbing space through outside plant optical fiber cables shall comply with the requirements of 225.14(B).

(4) Clearance.

Supply service drops and sets of overhead service conductors of 0 volts to 750 volts running above and parallel to optical fiber cable service drops shall have a minimum separation of 300 mm (12 in.) at any point in the span, including the point of their attachment to the building. Clearance of not less than 1.0 m (40 in.) shall be maintained between the two services at the pole.

(B) Above Roofs.

Outside plant optical fiber cables shall have a vertical clearance of not less than 2.5 m (8 ft) from all points of roofs above which they pass.

Exception No. 1: The requirement of 770.44(B) shall not apply to auxiliary buildings such as garages and the like.

Exception No. 2: A reduction in clearance above only the overhanging portion of the roof to not less than 450 mm (18 in.) shall be permitted if the following applies:

(1) Not more than 1.2 m (4 ft) of optical fiber cable service drop cable passes above the roof overhang.

(2) The cable is terminated at a through- or above-the-roof raceway or approved support.

Exception No. 3: Where the roof has a slope of not less than 100 mm in 300 mm (4 in. in 12 in.), a reduction in clearance to not less than 900 mm (3 ft) shall be permitted.

Informational Note: See ANSI/IEEE C2-2017, *National Electric Safety Code, Part 2, Safety Rules for Overhead Lines*, for additional information regarding overhead wires and cables.

722.167 Underground Optical Fiber Cables Entering Buildings.

Underground optical fiber cables entering buildings shall comply with 722.167(A) and 722.167(B).

(A) Underground Systems with Electric Light, Power, Class 1, or Non-Power-Limited Fire Alarm Circuit Conductors.

Underground conductive optical fiber cables entering buildings with electric light, power, Class 1, or non-power-limited fire alarm circuit conductors in a raceway, handhole enclosure, or manhole shall be located in a section separated from such conductors by means of brick, concrete, or tile partitions or by means of a suitable barrier.

(B) Direct-Buried Cables and Raceways.

Direct-buried conductive optical fiber cables shall be separated by at least 300 mm (12 in.) from conductors of any electric light, power, non-power-limited fire alarm circuit conductors, or Class 1 circuit.

Exception No. 1: Separation shall not be required where the electric service conductors are installed in raceways or have metal cable armor.

Exception No. 2: Separation shall not be required where electric light or power branch-circuit or feeder conductors, non-power-limited fire alarm circuit conductors, or Class 1 circuit conductors are installed in a raceway or in metal-sheathed, metal-clad, or Type UF, or Type USE cables.

722.168 Unlisted Optical Fiber Cables Entering Buildings.

(A) Conductive and Nonconductive Cables.

Unlisted conductive and nonconductive outside plant optical fiber cables shall be permitted to be installed in building spaces, other than risers, ducts used for environmental air, plenums used for environmental air, and other spaces used for environmental air, where the length of the cable within the building, measured from its point of entrance, does not exceed 15 m (50 ft) and the cable enters the building from the outside and is terminated in an enclosure. The point of entrance shall be permitted to be extended from the penetration of the external wall, roof, or floor slab by continuously enclosing the entrance optical fiber cables in rigid metal conduit (RMC) or intermediate metal conduit (IMC) to the point of emergence.

Informational Note: Splice cases or terminal boxes, both metallic and plastic types, typically are used as enclosures for splicing or terminating optical fiber cables.

(B) Nonconductive Cables in Raceway.

Unlisted nonconductive outside plant optical fiber cables shall be permitted to enter the building from the outside and shall be permitted to be installed in any of the following raceways:

(1) Intermediate metal conduit (IMC)

(2) Rigid metal conduit (RMC)

(3) Rigid polyvinyl chloride conduit (PVC)

(4) Electrical metallic tubing (EMT)

Unlisted nonconductive outside plant cables installed in rigid polyvinyl chloride conduit (PVC) or electrical metallic tubing (EMT) shall not be installed in risers, ducts used for environmental air, plenums used for environmental air, and other spaces used for environmental air.

Part VIII. Power-Limited Fire Alarm (PLFA) Cables and Wiring Methods.

722.170 Applications of Listed PLFA Cables.

PLFA cables shall comply with the requirements described in Table 722.170 or where cable substitutions are made as shown in 722.172. Where substitute cables are installed, the wiring requirements of Article 760, Parts I and III shall apply. Types FPLP-CI, FPLR-CI, and FPL-CI cables shall be permitted to be installed to provide 2-hour circuit integrity rated cables.

Table 722.170 Applications of Listed PLFA Cables in Buildings

Applications		-		Cable Type	
		FPLP and FPLP-CI	FPLR and FPLR-CI	FPL and FPL-CI	
In fabricated ducts as described in 720.22(B)	In fabricated ducts	Y	N	N	
	In metal raceway that complies with 720.22(B)	Y	Y	Y	
In other spaces used for environmental air as described in 720.22I	In other spaces used for environmental air	Y	N	N	
	-	In metal raceway that complies with 720.22I	Y	Y	Y
	-	In plenum communications raceways	Y	N	N
	-	In plenum cable routing assemblies	Y	N	N
	-	Supported by open metal cable trays	Y	N	N
	-	Supported by solid bottom metal cable trays with solid metal covers	Y	Y	Y
In risers	In vertical runs	Y	Y	N	
	-	In metal raceways	Y	Y	Y
	-	In fireproof shafts	Y	Y	Y
	-	In plenum communications raceways	Y	Y	N
	-	In plenum cable routing assemblies	Y	Y	N
	-	In riser communications raceways	Y	Y	N
	-	In riser cable routing assemblies	Y	Y	N
	-	In one- and two-family dwellings	Y	Y	Y
Within buildings in other than air-handling spaces and risers	General	Y	Y	Y	
	-	Supported by cable trays	Y	Y	Y
	-	In any raceway recognized in Chapter 3	Y	Y	Y
	-	In plenum communications raceway	Y	Y	Y
	-	In plenum cable routing assemblies	Y	Y	Y
	-	In riser communications raceways	Y	Y	Y

Applications		-		Cable Type	
		FPLP and FPLP-CI	FPLR and FPLR-CI	FPL and FPL-CI	
	-	In riser cable routing assemblies	Y	Y	Y
	-	In general-purpose communications raceways	Y	Y	Y
	-	In general-purpose cable routing assemblies	Y	Y	Y

Note:

"N" indicates that the cable type shall not be permitted to be installed in the application. "Y" indicates that the cable type shall be permitted to be installed in the application subject to the limitations described in 760.133 through 760.145.

722.171 Wiring Methods and Materials on Load Side of the PLFA Power Source.

Fire alarm circuits on the load side of the power source shall be permitted to be installed using wiring methods and materials in accordance with 722.171(A), 722.171(B), or a combination of both. Article 722, Parts I and II shall apply.

(A) PLFA Wiring Methods and Materials.

Power-limited fire alarm conductors and cables described in 722.170 shall be installed as detailed in 722.171(B)(1) through 722.171(B)(4), and 722.172.

(1) In Raceways, Exposed on Ceilings or Sidewalls, or Fished in Concealed Spaces.

Cable splices or terminations shall be made in listed fittings, boxes, enclosures, fire alarm devices, or utilization equipment. Where installed exposed, cables shall be adequately supported and installed such that maximum protection against physical damage is afforded by building construction such as baseboards, door frames, ledges, and so forth. Where located within 2.1 m (7 ft) of the floor, cables shall be securely fastened in an approved manner at intervals of not more than 450 mm (18 in.).

(2) Passing Through a Floor or Wall.

Cables shall be installed in metal raceways or rigid nonmetallic conduit where passing through a floor or wall to a height of 2.1 m (7 ft) above the floor, unless adequate protection can be afforded by building construction such as detailed in 722.171(A)(1) or unless an equivalent solid guard is provided.

(3) Nonconcealed Spaces.

Cables covered by Chapter 3 used for wiring of PLFA circuits and installed in nonconcealed spaces shall comply with the following:

(1) The cables shall be installed in accordance with 722.100(A)(15)(a) and 722.100(A)(15)(b).

(2) Exposed portions of the cable shall have a length not exceeding 3 m (10 ft).

(4) Portable Fire Alarm Systems.

A portable fire alarm system provided to protect a stage or set when not in use shall be permitted to use wiring methods in accordance with 530.12.

(5) PLFA Wired Using NPLFA Wiring Methods and Materials.

NPLFA wiring methods shall be permitted when used in accordance with 760.46, 760.49, or 760.53 for PLFA circuits. Conductors shall be solid or stranded copper. Separation from electric light, power, Class 1, non-power-limited fire alarm circuit conductors, and medium-power network-powered broadband communications cables shall comply with 760.136.

(B) Power-Limited Fire Alarm Conductor Size.

Conductors of 26 AWG shall be permitted only where spliced with a connector listed as suitable for 26 AWG to 24 AWG or larger conductors that are terminated on equipment or where the 26 AWG conductors are terminated on equipment listed as suitable for 26 AWG conductors. Single conductors shall not be smaller than 18 AWG.

(C) Support of Conductors.

Power-limited fire alarm circuit conductors shall not be strapped, taped, or attached by any means to the exterior of any conduit or other raceway as a means of support.

722.172 Permitted Substitutions for Power-Limited Fire Alarm Cables.

The substitutions for fire alarm cables listed in Table 722.172 and illustrated in Figure 722.172 shall be permitted. Where substitute cables are installed, the wiring requirements of Article 760, Parts I and III shall apply.

Informational Note: See 722.100 for information on communications cables (CMP, CMR, CMG, CM).

Table 722.172 Permitted Substitutions for Power-Limited Fire Alarm Cables.

Cable Type	Permitted Substitutions
FPLP	CMP
FPLR	CMP, FPLP, CMR
FPL	CMP, FPLP, CMR, FPLR, CMG, CM

Figure 722.172 Power-Limited Fire Alarm Cable Substitution Hierarchy.

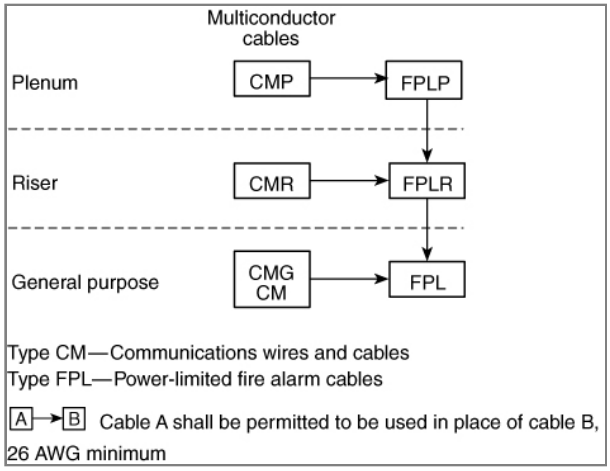

Part IX. Circuit Integrity Cables (Type CI), Fire-Resistive Cable Systems, and Electrical Circuit Protective Systems.

722.180 Circuit Integrity (CI) Cable, Fire-Resistive Cable System, or Electrical Circuit Protective System.

(A) General.

CI cable, a fire-resistive cable system, or a listed electrical circuit protective system shall be permitted for use in systems that supply critical circuits to ensure survivability for continued circuit operation for a specified time under fire conditions.

(B) Securing and Supporting.

Circuit integrity type CI cable shall be supported at 610 mm (24 in.) maximum intervals in accordance with the following:

(1) Secured to the noncombustible surface of the building structure

(2) Using steel supports and fasteners

722.181 Thermocouple Circuits.

Conductors in Type PLTC cables used for Class 2 thermocouple circuits shall be permitted to be any of the materials used for thermocouple extension wire.

722.182 Installation of Circuit Conductors Extending Beyond One Building.

Circuit conductors that extend beyond one building and are run such that they are subject to accidental contact with electric light or power conductors operating over 300 volts to ground, or are exposed to lightning on interbuilding circuits on the same premises, shall comply with the following:

(1) For other than coaxial conductors, 750.48, 750.100, 800.44, 800.50, 800.53, 805.170(A), and 805.170(B)

(2) For coaxial conductors, 750.48(B), 750.75, and 800.44

Additional Proposed Changes

File Name	Description	Approved
Limited_Energy_Roster-2026_2nd_Draft.pdf	Limited-Energy Task Group Roster-2nd Draft	

Statement of Problem and Substantiation for Public Comment

This public comment is submitted on behalf of the Limited-Energy Task Group (see attached roster) to divide new Article 722 into ten (10) parts. The topics are already laid out in this way but not in Parts. This new Article 722 is large enough to warrant a strategic division into multiple parts and doing so will enhance usability. This will also allow for the addition of a new note/figure in section 722.1 showing the arrangement of the article like done in other large articles 230, 250, and 430. This new figure is created in a companion PC submitted by this Task Group.
See companion PC-1316.

Related Public Comments for This Document

Related Comment	Relationship
Public Comment No. 1316-NFPA 70-2024 [Section No. 722.1]	NEW Info note and figure to show the arrangement of Article 722.
Public Comment No. 1316-NFPA 70-2024 [Section No. 722.1]	

Related Item

• FCR-238

Submitter Information Verification

Submitter Full Name: Kyle Krueger
Organization: NECA

Affiliation: NECA
Street Address:
City:
State:
Zip:
Submittal Date: Tue Aug 20 13:55:15 EDT 2024
Committee: NEC-P03

Limited Energy Task Group [2nd Draft]					
No.	First Name	Last Name	Class.	Organization	Other Committees
1	Kyle	Krueger	[I/M]	NECA	NEC-Correlating Comittee CMP 3 NFPA 72-Correlating Committee
2	Ernie	Gallo	[U/T]	NEBScore	
3	Derrick	Atkins	[L]	Minneapolis Electrical JA	NEC-Correlating Committee CMP 5
4	Anthony	Tassone	[R/T]	UL Solutions	CMP 3 CMP 16
5	Chad	Jones	[M]	Cisco	CMP 3
6	Sam	Rokowski	[I/M]	Maddox Inc.	CMP 3
7	George	Bish	[M]	Amazon/Ring Protect Inc	CMP 16
8	Trevor	Bowmer	[U]	Telecom Consulting	NEC Correlating Committee CMP 16
9	Ronald	Tellas	[M]	CCCA	CMP 3 CMP 16
10	Tim	Mikloiche	[E]	IAEI	CMP 3
11	Ryan	Jackosn	[M]	Steel Tube Industry	CMP 3
12	Diana	Lettkeman	[M]	Dish	CMP 16
13	John	Kacperski	[L]	IBEW	CMP 16

Public Comment No. 1567-NFPA 70-2024 [Article 722]

Article 722 Limited-Energy Cables for Power-Limited Circuits, Fault-Managed-Power Circuits, Optical Fiber Circuits, and Communications Circuits

Part I. General

722.1 Scope.

This article covers the general requirements for the installation of single- and multiple-conductor cables used in Class 2 and Class 3 power-limited circuits, power-limited fire alarm (PLFA) circuits, Class 4 fault-managed power circuits, optical fiber cables, and communications systems power-limited, remote-control, and signaling circuits that are not an integral part of a device or utilization equipment installed inside of buildings.

These general requirements also cover cables used in communications systems and apply to communications circuits, data communications, community antenna television and radio distribution systems, network-powered broadband communications systems, and premises-powered broadband communications systems, unless modified by applicable parts of Articles 800, 810, 820, 830, or 840.

Informational Note No. 1: See 206.4 for classifications of remote-control and signaling circuits.

Informational Note No. 2: Class 4 fault-managed power systems consist of a Class 4 power transmitter and a Class 4 power receiver connected by a Class 4 cabling system. These systems are characterized by monitoring the circuit for faults and controlling the source current to ensure the energy delivered into any fault is limited. Class 4 systems differ from Class 1, Class 2, and Class 3 systems in that they are not limited for power delivered to an appropriate load. They are current limited for faults between the Class 4 transmitter and Class 4 receiver.

Informational Note No. 3: The circuits described herein are characterized by usage and electrical power limitations that differentiate them from electric light and power circuits; therefore, alternative requirements are given regarding minimum wire sizes, ampacity adjustment and correction factors, overcurrent protection, installation requirements, and wiring methods and materials.

722.4 Other Articles.

In addition to the requirements of this article, installations of limited-energy and communications wires and cables shall also comply with the following:

(1) Class 2 and Class 3 cables: Article 725, Part II and Article 722, Parts I and II

(2) Class 4 cables: Article 726, Part II and IV and Article 722, Parts I and II

(3) Fire alarm cables: Article 760, Part III

(4) Optical fiber cables: Article 770, Part V

(5) Coaxial cables — installations of premises (within buildings) CATV and radio distribution circuits: Article 820, Part V

722.12 Uses Not Permitted.

Class 4 cables shall not be permitted for any applications that are not part of a Class 4 system.

Exception: Use of Class 4 cable for other applications shall be permitted if the cable has been listed as suitable for the other applications.

722.14 Cables Containing Communications and Power Circuits.

Cables carrying data or communications circuits as well as power circuits shall be classified as electrical power circuits in accordance with the type of electrical power carried.

Exception: PoE circuits shall be permitted to be classified as communications and Class 2 or Class 3.

Informational Note: Communications circuits carrying power in accordance with Article 805, Part II, 820.15 , 830.15 , or 840.160 are considered according to their appropriate article for each type of circuit.

722.27 Temperature Limitation of Limited-Energy and Communications Cables.

No cable shall be used in such a manner that its operating temperature exceeds that of its rating.

722.30 Securing and Supporting.

(A) General.

In addition to the requirements of 720.19 and 720.30 , limited-energy and communications cables shall be installed in accordance with 722.30(A)(1) and 722.30(A)(2) :

(1) Supporting.

Cables installed exposed on the surface of ceilings and sidewalls shall be supported by the building structure in such a manner that the cable will not be damaged by normal building use.

(2) Securing.

Such cables shall be secured by hardware, including straps, staples, cables ties listed and identified for securement and support, and hangers, or similar fittings designed and installed so as not to damage the cable.

(B) Spaces Used for Environmental Air (Plenums).

Limited-energy and communications cables installed in other spaces used for environmental air (plenums) shall be secured and supported in accordance with 720.30(G) :

Part II. Listing and Marking Requirements

722.100 Listing of Limited-Energy and Communications Cables.

Cables installed in buildings shall be listed in accordance with 722.100(A)(1) through 722.100(A)(16) :

Exception No. 1: Optical fiber cables that are installed in compliance with 722.168 shall not be required to be listed.

Exception No. 2: Cables installed in compliance with 800.48 shall not be required to be listed.

(A) Listing of Cables.

~~Cables installed as wiring methods within buildings shall be listed as resistant to the spread of fire and other criteria in accordance with 722.100(A)(1) through 722.100(A)(16) :~~

~~Informational Note No. 1: See UL 13, *Standard for Power-Limited Circuit Cables* , for applicable requirements for listing of Class 2 and Class 3 cable and power-limited tray cable (PLTC).~~

~~Informational Note No. 2: See UL 1424, *Cables for Power-Limited Fire-Alarm Circuits* , for applicable requirements for listing of power-limited fire alarm cable.~~

~~Informational Note No. 3: See UL 1651, *Optical Fiber Cable* , for applicable requirements for listing of optical fiber cable.~~

~~Informational Note No. 4: See UL 1400-2, *Outline for Fault-Managed Power Systems — Part 2: Requirements for Class 4 Cables* , for applicable requirements for listing of Class 4 cable.~~

~~**(1)** Plenum Cable.~~

~~Plenum cable shall be listed as suitable for use in ducts, plenums, and other space for environmental air and shall be listed as having adequate fire-resistant and low-smoke producing characteristics. Plenum cable types shall be identified in Table 722.102(A) .~~

~~Informational Note: See NFPA 262-2023, *Standard Method of Test for Flame Travel and Smoke of Wires and Cables for Use in Air-Handling Spaces* , for the test method used to determine that a cable is low-smoke producing and fire resistant, exhibiting a maximum peak optical density of 0.50 or less, an average optical density of 0.15 or less, and a maximum flame spread distance of 1.52 m (5 ft) or less.~~

~~**(2)** Riser Cable.~~

~~Riser cable shall be listed as suitable for use in a vertical run in a shaft or from floor to floor and shall be listed as having fire-resistant characteristics capable of preventing the carrying of fire from floor to floor.~~

~~Informational Note: See ANSI/UL 1666-2012, *Test for Flame Propagation Height of Electrical and Optical-Fiber Cable Installed Vertically in Shafts* , for the cable requirements defining fire-resistant characteristics capable of preventing the carrying of fire from floor to floor.~~

~~**(3)** General-Purpose Cable.~~

~~General-purpose cable shall be listed as resistant to the spread of fire and as suitable for general-purpose use, except for use in risers, ducts, plenums, and other space used for environmental air.~~

~~Informational Note: See UL 2556, *Wire and Cable Test Methods* , for defining *resistant to the spread of fire* . One method is to demonstrate that the cables do not spread fire to the top of the tray in the UL Flame Exposure, Vertical Tray Flame Test. The smoke measurements in the test method are not applicable. A method of defining *resistant to the spread of fire* is for the damage (char length) not to exceed 1.5 m (4 ft 11 in.) when performing the FT4 Vertical Flame Test.~~

~~**(4)** Alternative General-Purpose Cable.~~

~~Alternative general-purpose optical fiber cable shall be listed as suitable for general-purpose use, with the exception of risers and plenums, and shall also be resistant to the spread of fire.~~

~~Informational Note: See CSA C22.2 No. 0.3-M-2001, *Test Methods for Electrical Wires and Cables* , for the CSA Vertical Flame Test — cables in cable trays, that can also be used to define *resistant to the spread of fire* when the damage (char length) does not exceed 1.5 m (4 ft 11 in.).~~

~~**(5)** Limited-Use Cable.~~

~~Limited-use cable shall be listed as suitable for use in dwellings and raceways and shall be listed as resistant to flame spread.~~

~~Informational Note: See ANSI/UL 2556, *Standard for Wire and Cable Test Methods* , for one method of determining that cable is resistant to flame spread by testing the cable to the FV-2/VW-1 test.~~

~~**(6)** Type PLTC.~~

~~Type PLTC nonmetallic-sheathed, power-limited tray cable shall be listed as being suitable for cable trays, resistant to the spread of fire, and sunlight- and moisture-resistant. Type PLTC cable used in a wet location shall be listed for use in wet locations and marked "wet" or "wet location."~~

~~Informational Note: See ANSI/UL 1685-2010, *Standard for Safety for Vertical-Tray Fire-Propagation and Smoke-Release Test for Electrical and Optical-Fiber Cables* , for the UL Flame Exposure, Vertical Tray Flame Test that is used to determine resistance to the spread of fire when cables do not spread fire to the top of the tray. The smoke measurements in the test method are not applicable. See CSA C22.2 No. 0.3-M-2001, *Test Methods for Electrical Wires and Cables* , for the CSA Vertical Flame Test — cables in cable trays that can also be used to define *resistant to the spread of fire* when the damage (char length) does not exceed 1.5 m (4 ft 11 in.).~~

~~**(7)** Circuit Integrity (CI) Cable, Fire-Resistive Cable System, or Electrical Circuit Protective System.~~

~~Cables that are used for survivability of critical circuits under fire conditions shall comply with 722.100(A)(7)(a) , 722.100(A)(7)(b) , or 722.100(A)(7)(c) .~~

~~Informational Note: See *NFPA 72* -2025, *National Fire Alarm and Signaling Code* , 12.4.3 and 12.4.4 for additional information on fire alarm CI cable, fire-resistive cable systems, or electrical circuit protective systems used for fire alarm circuits to comply with the survivability requirements to maintain the circuit's electrical function during fire conditions for a defined period of time.~~

(a) ~~*CI Cables.* CI cables of the types specified in 722.100(A)(1) , 722.100(A)(2) , 722.100(A)(3) , 722.100(A)(4) , and 722.100(A)(6) and used for survivability of critical circuits shall be marked with the additional classification using the suffix "CI." To maintain its listed fire-resistive rating, CI cable shall only be installed in free air in accordance with 722.180(B) . CI cables shall only be permitted to be installed in a raceway where specifically listed and marked as part of a fire-resistive cable system as covered in 722.100(A)(7)(b) .~~

~~Informational Note: See UL 2196, *Fire Test for Circuit Integrity of Fire-Resistive Power, Instrumentation, Control and Data Cables* , and UL 1425, *Cables for Non–Power-Limited Fire-Alarm Circuits* , for information on establishing a rating for CI cable. The *UL Guide Information for Nonpower-limited Fire Alarm Circuits (FNHT)* contains information to identify the cable and its installation limitations to maintain the fire-resistive rating.~~

(b) ~~*Fire-Resistive Cables.* Fire-resistive cables of the types specified in 722.100(A)(1) , 722.100(A)(2) , 722.100(A)(3) , 722.100(A)(4) , 722.100(A)(6) , and 722.100(A)(7)(a) that are part of a fire-resistive cable system shall be identified with the system identifier and hourly rating marked on the protectant or the smallest unit container and installed in accordance with the listing of the system.~~

~~Informational Note: See UL 2196, *Fire Test for Circuit Integrity of Fire-Resistive Power, Instrumentation, Control and Data Cables* , for information on establishing a rating for a fire-resistive cable system. The *UL Guide Information for Electrical Circuit Integrity Systems (FHIT)* contains information to identify the system and its installation limitations to maintain a minimum fire-resistive rating.~~

(c) ~~*Electrical Circuit Protective System.* Protectants for cables of the types specified in 722.100(A)(1) , 722.100(A)(2) , 722.100(A)(3) , 722.100(A)(4) , and 722.100(A)(6) that are part of an electrical circuit protective system shall be identified with the protective system identifier and hourly rating marked on the protectant or the smallest unit container and installed in accordance with the listing of the protective system.~~

~~Informational Note: See UL 1724, *Fire Tests for Electrical Circuit Protective Systems* , for information on establishing a rating for an electrical circuit protective system. The *UL Guide Information for Electrical Circuit Integrity Systems (FHIT)* contains information to identify the system and its installation limitations to maintain the fire-resistive rating.~~

~~**(8)** Class 3 Single Conductors.~~

~~Class 3 single conductors used as other wiring within buildings shall be listed Type CL3 and shall not be smaller than 18 AWG.~~

> ~~Informational Note: See ANSI/UL 1685-2010, *Standard for Safety for Vertical-Tray Fire-Propagation and Smoke-Release Test for Electrical and Optical-Fiber Cables*, for the UL Flame Exposure, Vertical Tray Flame Test that is used to determine resistance to the spread of fire when cables do not spread fire to the top of the tray. The smoke measurements in the test method are not applicable. See CSA C22.2 No. 0.3-M-2001, *Test Methods for Electrical Wires and Cables*, for the CSA Vertical Flame Test — cables in cable trays that can also be used to define *resistant to the spread of fire* when the damage (char length) does not exceed 1.5 m (4 ft 11 in.).~~

~~**(9)** Limited Power (LP) Cable.~~

~~Class 2 and Class 3 LP cables shall be listed as suitable for carrying power and data up to a specified current limit for each conductor without exceeding the temperature rating of the cable. The cables shall be marked with the suffix "-LP (XXA)" where XXA designates the current limit in amperes per conductor.~~

> ~~Informational Note: An example of the marking on 23 AWG, 4-pair, Class 2 cable rated 75°C (167°F) with an LP current rating of 0.6 amperes per conductor is "CL2-LP (0.6A) 75°C 23 AWG 4-pair."~~

~~**(10)** Under-Carpet Cables.~~

~~Under-carpet cable shall be listed as suitable for use under carpet, floor covering, modular tiles, and planks.~~

> ~~Informational Note: See UL 444, *Standard for Safety for Communications Cables*, for the compressive loading test used to determine the suitability of cable for under-carpet use.~~

~~**(11)** Wet Locations.~~

~~Cable used in a wet location shall be listed for use in wet locations and be marked "wet" or "wet location" or have a moisture-impervious metal sheath.~~

~~**(12)** Field-Assembled Optical Fiber Cables.~~

~~Field-assembled optical fiber cable shall comply with 722.100(A)(12)(a) through 722.100(A)(12)(d):~~

(1) ~~The specific combination of jacket and optical fibers intended to be installed as a field-assembled optical fiber cable shall be one of the types in 722.100(A)(1), 722.100(A)(2), or 722.100(A)(3) and shall be marked in accordance with Table 722.102(A):~~

(2) ~~The jacket of a field-assembled optical fiber cable shall have a surface marking indicating the specific optical fibers with which it is identified for use.~~

(3) ~~The optical fibers shall have a permanent marking, such as a marker tape, indicating the jacket with which they are identified for use.~~

(4) ~~The jacket without fibers shall meet the listing requirements for communications raceways in 722.110 and 722.111 in accordance with the cable marking.~~

~~**(13)** Cables Containing Optical Fibers.~~

~~Composite optical fiber cables shall be listed as electrical cables based on the type of electrical conductors.~~

~~**(14)** Class 2 and Class 3 Cable Voltage and Temperature Ratings.~~

~~Class 2 cables shall have a voltage rating of not less than 150 volts. Class 3 cables shall have a voltage rating of not less than 300 volts. Class 2 and Class 3 cables shall have a temperature rating of not less than 60°C (140°F).~~

~~**(15)** Power-Limited Fire Alarm (PLFA) Cables.~~

~~PFLA cables shall comply with 722.100(A)(15)(a) through 722.100(A)(15)(d):~~

(1) ~~Conductors for cables, other than coaxial cables, shall be solid or stranded copper. Coaxial cables shall be permitted to use 30 percent conductivity copper-covered steel center conductor wire.~~

(2) ~~The size of conductors in a multiconductor cable shall not be smaller than 26 AWG. Single conductors shall not be smaller than 18 AWG. Conductors of 26 AWG shall be permitted only where spliced with a connector listed as suitable for 26 AWG to 24 AWG or larger conductors that are terminated on equipment or where the 26 AWG conductors are terminated on equipment listed as suitable for 26 AWG conductors.~~

(3) ~~Cables shall have a voltage rating of not less than 300 volts.~~

(4) ~~Cables shall have a temperature rating of not less than 60°C (140°F).~~

~~**(16)** Class 4 Cable Construction.~~

(a) ~~*Sizes.* Conductors of sizes not smaller than 24 AWG shall be permitted to be used.~~

(b) ~~*Insulation.* Insulation on conductors shall be rated not less than 450 volts dc.~~

(c) ~~*Voltage Rating.* Cables shall have a voltage rating of not less than 450 volts dc. Voltage ratings shall not be marked on the cables.~~

(d) ~~*Temperature Rating.* Cables shall have a temperature rating of not less than 60°C (140°F).~~

~~**722.102** Marking of Listed Limited-Energy and Communications Cables.~~

~~**(A)** General.~~

~~Cables installed in buildings shall be marked in accordance with 722.102(A), and they shall be permitted to be marked in accordance with 722.102(B):~~

~~Cables shall be durably marked on the surface in accordance with the following:~~

(1) ~~The AWG size or circular mil area shall be repeated at intervals not exceeding 610 mm (24 in.).~~

(2) ~~All other markings shall be repeated at intervals not exceeding 1.0 m (40 in.).~~

(3) ~~The proper type designation for the type of cable shall be marked in accordance with Table 722.102(A):~~

(4) ~~The manufacturer's name, trademark, or other distinctive marking by which the organization responsible for the product can be readily identified shall be marked.~~

(5) ~~The AWG size or circular mil area shall be marked.~~

> ~~Informational Note No. 1: See Chapter 9, Table 8 for conductor area expressed in SI units for conductor sizes specified in AWG or circular mil area.~~

(6) ~~The temperature rating for a temperature rating exceeding 60°C (140°F) shall be marked.~~

> ~~Informational Note No. 2: A minimum temperature rating of 60°C (140°F) is assumed for cables not marked with a temperature rating.~~

(7) ~~Voltage ratings shall not be marked on the cables.~~

~~*Exception:* *Voltage markings shall be permitted where the cable has multiple listings, and a voltage marking is required for one or more of the listings.*~~

~~Informational Note No. 3:~~ ~~Voltage markings on cables could be misinterpreted to suggest that the cables may be suitable for Class 1 electric light and power applications.~~

~~Informational Note No. 4:~~ ~~Cable types are listed in descending order of fire resistance rating.~~

~~Table 722.102(A) Cable Type Markings~~

~~Cable Type Cable Marking Class 4 plenum cable CL4P Class 3 plenum cable CL3P Class 2 plenum cable CL2P Power-limited fire alarm plenum cable FPLP Nonconductive optical fiber plenum cable OFNP Conductive optical fiber plenum cable OFCP Class 4 riser cable CL4R Class 3 riser cable CL3R Class 2 riser cable CL2R Power-limited fire alarm riser cable FPLR Nonconductive optical fiber riser cable OFNR Conductive optical fiber riser cable OFCR Class 4 general-purpose cable CL4 Class 3 general-purpose cable CL3 Class 2 general-purpose cable CL2 Class 4 outdoor-only use cable CL4Z Power-limited fire alarm cable FPL Nonconductive general-purpose optical fiber cable OFN Conductive general-purpose optical fiber cable OFC Alternative nonconductive general-purpose optical fiber cable OFNG Alternative conductive general-purpose optical fiber cable OFCG Class 3 cable — limited use CL3X Class 2 cable — limited use CL2X Under-carpet cable CMUC~~

~~Note: All types of CL2, CL3, CL4, and FPL cables containing optical fibers are provided with the suffix "-OF."~~

~~**(B)** Optional Markings.~~

~~Cables shall be permitted to be surface marked to indicate special characteristics of the cable materials.~~

~~Informational Note No. 1:~~ ~~Examples of these characteristics include, but are not limited to, limited smoke, halogen free, low smoke and halogen free, and sunlight resistant.~~

~~Informational Note No. 2:~~ ~~Some examples of optional markings are ST1 to indicate limited smoke characteristics. See UL 2556,~~ ~~*Wire and Cable Test Methods*~~ ~~, HF to indicate halogen free. See in UL 2885,~~ ~~*Outline of Investigation for Acid Gas, Acidity and Conductivity of Combusted Materials*~~ ~~, and LSHF to indicate halogen free and low-smoke characteristics. See IEC 61034-2,~~ ~~*Measurement of smoke density of cables burning under defined conditions — Part 2: Test procedure and requirements*~~ ~~.~~

~~**Part III.** Wiring Methods, Applications and Installations Inside Buildings~~

~~**722.110** Application and Installation of Raceways, Cable Routing Assemblies, and Cable Trays.~~

~~**(A)** Application of Listed Communications Raceways in Buildings.~~

~~Permitted and nonpermitted applications of listed communications raceways shall be in accordance with~~ ~~Table 722.110(A)~~ ~~.~~

~~Table 722.110(A) Applications of Listed Communications Raceways in Buildings.~~

~~Applications Listed Communications Raceway Type Plenum Riser General-Purpose In ducts specifically fabricated for environmental air as described in 720.22(B) In fabricated ducts N N N In metal raceway that complies with 300.25(B) N N N In other spaces used for environmental air (plenums) as described in 720.22(C) In other spaces used for environmental air Y N N - In metal raceway that complies with 300.25(C) Y Y Y - In plenum cable routing assemblies N N N - Supported by open metal cable trays Y N N - Supported by solid bottom metal cable trays with solid metal covers Y Y Y In risers In vertical runs Y Y N In metal raceways Y Y Y In fireproof shafts Y Y Y In plenum cable routing assemblies N N N In riser cable routing assemblies N N N In one- and two-family dwellings Y Y Y Within buildings in other than air-handling spaces and risers General Y Y Y In one- and two-family dwellings Y Y Y In multifamily dwellings Y Y Y In nonconcealed spaces Y Y Y Supported by cable trays Y Y Y Under carpet, modular flooring, and planks N N N In distributing frames and cross-connect arrays Y Y Y In any raceway recognized in Chapter 3 Y Y Y In plenum cable routing assemblies N N N In riser cable routing assemblies N N N In general-purpose cable routing assemblies N N N~~

~~Note: An "N" in the table indicates that the communications raceway type shall not be installed in the application. A "Y" indicates that the communications raceway type shall be permitted to be installed in the application, subject to the limitations described in 722.111 and 722.131.~~

~~**(B)** Application of Listed Cable Routing Assemblies.~~

~~Permitted and nonpermitted applications of listed cable routing assemblies shall be in accordance with~~ ~~Table 722.110(B)~~ ~~.~~

~~Table 722.110(B) Applications of Listed Cable Routing Assemblies in Buildings.~~

~~Applications Listed Cable Routing Assembly Type Plenum Riser General-Purpose In ducts specifically fabricated for environmental air as described in 720.22(B) In fabricated ducts N N N In metal raceway that complies with 300.25(B) N N N In other spaces used for environmental air (plenums) as described in 720.22(C) In other spaces used for environmental air Y N N In metal raceway that complies with 300.25(C) Y Y Y - In plenum cable routing assemblies N N N - Supported by open metal cable trays Y N N - Supported by solid bottom metal cable trays with solid metal covers Y Y Y In risers In vertical runs Y Y N - In metal raceways Y Y Y - In fireproof shafts Y Y Y - In plenum cable routing assemblies N N N - In riser cable routing assemblies N N N - In one- and two-family dwellings Y Y Y Within buildings in other than air-handling spaces and risers General Y Y Y In one- and two-family dwellings Y Y Y In multifamily dwellings Y Y Y In nonconcealed spaces Y Y Y Supported by cable trays Y Y Y Under carpet, modular flooring, and planks N N N In distributing frames and cross-connect arrays Y Y Y In any raceway recognized in Chapter 3 Y Y Y In plenum cable routing assemblies N N N In riser cable routing assemblies N N N In general-purpose cable routing assemblies N N N~~

~~Note: An "N" in the table indicates that the cable routing assembly type shall not be installed in the application. A "Y" indicates that the cable routing assembly type shall be permitted to be installed in the application subject to the limitations described in 722.131.~~

~~**722.111** Installation of Raceways, Cable Routing Assemblies, and Cable Trays.~~

~~**(A)** Types of Raceways.~~

~~Wires and cables shall be permitted to be installed in raceways that comply with~~ ~~722.111(A)(1)~~ ~~,~~ ~~722.111(A)(2)~~ ~~, or~~ ~~722.111(A)(3)~~ ~~. Medium-power network-powered broadband communications cables shall not be installed in raceways that comply with~~ ~~722.111(A)(2)~~ ~~.~~

~~**(1)** Permitted Raceways.~~

~~Wires and raceways shall be permitted to be in any raceway included in Chapter 3. The raceways shall be installed in accordance with Chapter 3.~~

~~**(2)** Communications Raceways.~~

~~Wires and cables shall be permitted to be installed in plenum communications raceways, riser communications raceways, and general-purpose communications raceways selected in accordance with~~ ~~Table 722.110(A)~~ ~~, listed in accordance with~~ ~~722.110(A)~~ ~~, and installed in accordance with 722.131~~ ~~and~~ ~~362.24~~ ~~through 362.56, where the requirements applicable to electrical nonmetallic tubing (ENT) apply.~~

~~**(3)** Innerduct for Communications Wires and Cables, Coaxial Cables, or Network-Powered Broadband Communications Cables.~~

~~Listed plenum communications raceways, listed riser communications raceways, and listed general-purpose communications raceways selected in accordance with~~ ~~Table 722.110(A)~~ ~~shall be permitted to be installed as innerduct in any type of listed raceway permitted in Chapter 3.~~

~~**(4)** Raceway Fill.~~

~~The raceway fill requirements of~~ ~~720.6(B)(1)~~ ~~shall apply to medium-power network-powered broadband communications cables.~~

~~**(5)** Permitted Substitutions.~~

~~Substitutions of listed communications raceways shall be permitted in accordance with~~ ~~Table 722.111(A)(5)~~ ~~.~~

~~Table 722.111(A)(5) Permitted Substitutions of Listed Communications Raceways~~

~~Raceway Type Permitted Substitution Riser communications raceway Plenum communications raceway General purpose communications raceway Plenum communications raceway, riser communications raceway~~

~~(B) Cable Routing Assemblies.~~

~~Cables shall be permitted to be installed in plenum cable routing assemblies, riser cable routing assemblies, and general-purpose cable routing assemblies selected in accordance with Table 722.110(B) , listed in accordance with 722.110(B) , and installed in accordance with 722.111(B)(1) ; 722.111(B)(2) , and 722.131 :~~

~~(1) Horizontal Support.~~

~~Cable routing assemblies shall be supported where run horizontally at intervals not to exceed 900 mm (3 ft) and at each end or joint, unless listed for other support intervals. In no case shall the distance between supports exceed 3 m (10 ft).~~

~~(2) Vertical Support.~~

~~Vertical runs of cable routing assemblies shall be supported at intervals not exceeding 1.2 m (4 ft), unless listed for other support intervals, and shall not have more than one joint between supports.~~

~~(3) Permitted Substitutions.~~

~~Substitutions of listed cable routing assemblies shall be permitted in accordance with Table 722.111(B)(3) :~~

~~Table 722.111(B)(3) Permitted Substitutions of Listed Communications Raceways~~

~~Raceway Type Permitted Substitution Riser communications raceway Plenum communications raceway General purpose communications raceway Plenum communications raceway, riser communications raceway~~

~~(C) Cable Trays.~~

~~Wires and cables and communications raceways shall be permitted to be installed in metal or listed nonmetallic cable tray systems. Ladder cable trays shall be permitted to support cable routing assemblies.~~

~~**722.112**~~

~~Table 722.112 Limited-Energy Cable Type~~

~~Plenum limited-energy cables CMP Communications plenum cables CATVP Community antenna television plenum cables BLP Network-powered broadband communications low-power plenum cables FPLP Power-limited fire alarm plenum cables CL4P Class 4 plenum cables CL3P Class 3 plenum cables CL2P Class 2 plenum cables OFNP Nonconductive optical fiber plenum cables OFCP Conductive optical fiber plenum cables Riser limited-energy cables CMR Communications riser cables - CATVR Community antenna television riser cables BLR Network-powered broadband communications low-power riser cables FPLR Power-limited fire alarm riser cables CL4R Class 4 riser cables CL3R Class 3 riser cables CL2R Class 2 riser cables OFNR Nonconductive optical fiber riser cables OFCR Conductive optical fiber riser cables General-purpose limited-energy cables CMG, CM Communications general-purpose cables - CATV Community antenna television general-purpose cables BL Network-powered broadband communications low-power general-purpose cables FPL Power-limited fire alarm general-purpose cables CL4 Class 4 general-purpose cables PLTC Power-limited tray cables CL3 Class 3 general-purpose cables CL2 Class 2 general-purpose cables OFNG, OFN Nonconductive optical fiber general-purpose cables OFCG, OFC Conductive Optical Fiber general-purpose cables Limited-use limited-energy cables CMX Communications limited use cables - CATVX Community antenna television limited use cables BLX Network-powered broadband communications low-power limited use cables CL3X Class 3 limited use cables CL2X Class 2 limited use cables Specialty use limited-energy cables CMUC Under-carpet communications wires and cables~~

~~(A) General.~~

~~Unless prohibited by this section, plenum, riser, general-purpose, and limited-use limited-energy cables shall be permitted to be installed in the same raceway, cable tray, box, enclosure, or cable routing assembly. Installations shall comply with 722.112(B) through 722.112(H) :~~

~~(B) Two or More Class 2, Class 3, or Class 4 Circuits.~~

~~Conductors of two or more limited energy circuits of the same class shall be permitted within the same limited energy cable.~~

~~(C) (C) Class 2, Class 3, and Class 4 Circuits with the Same Limited Energy Cable.~~

~~(1) Class 3 Cables.~~

~~Class 2 circuits shall be permitted to use listed Class 3 cables.~~

~~(2) Dual-Listed Class 3/Class 4 Cables.~~

~~Class 2 and Class 3 circuits shall be permitted to use dual-listed Class 3/Class 4 cables.~~

~~(D) Class 2 and Class 3 Circuits with Communications Circuits.~~

~~(1) Communications Cables.~~

~~Conductors of one or more Class 2 or Class 3 circuits shall be permitted in the same cable with conductors of communications circuits. The cable shall be listed as a communications cable.~~

~~(2) Composite Cables.~~

~~Cables constructed of individually listed Class 2, Class 3, and communications cables under a common jacket shall be permitted to be classified and listed as communications cables. The fire resistance rating of the composite cable shall be determined by the combustion characteristics of the composite cable.~~

~~(E) Class 2, Class 3, or Class 4 Cables with Other Limited Energy Cables.~~

~~(1) Limited-Use Cables.~~

~~Plenum, riser, general-purpose, and limited use limited energy cables shall be permitted in the same enclosure or raceway.~~

~~(2) Other Than Limited-Use Cables.~~

~~Plenum, riser, and general-purpose limited energy cables shall be permitted in the same enclosure, cable tray, raceway, or cable routing assembly.~~

~~(F) Power-Limited Fire Alarm Circuits.~~

~~(1) Multiple PLFA Circuits.~~

~~Cable and conductors of two or more power-limited fire alarm circuits shall be permitted within the same cable, enclosure, cable tray, raceway, or cable routing assembly.~~

~~(2) With Network-Powered Broadband.~~

~~Low-power network-powered broadband communications circuits shall be permitted in the same enclosure, cable tray, raceway, or cable routing assembly with PLFA cables.~~

~~(3) With Class 2 Circuits.~~

~~Conductors of one or more Class 2 circuits shall be permitted within the same cable, enclosure, cable tray, raceway, or cable routing assembly with conductors of power-limited fire alarm circuits if the insulation of the Class 2 circuit conductors in the cable, enclosure, raceway, or cable routing assembly is at least that required by the power-limited fire alarm circuits.~~

~~(4) With Class 3 or Communications Circuits.~~

~~Cable and conductors of Class 3 and communications circuits shall be permitted within the same cable, enclosure, cable tray, raceway, or cable routing assembly with cables and conductors of power-limited fire alarm circuits.~~

~~**(5)** With 4 Circuits.~~

~~Class 4 circuits shall be permitted in the same cable with power-limited fire alarm circuits if the cable is dual-listed.~~

~~**(6)** Audio System Circuits and PLFA Circuits.~~

~~Audio system circuits described in 640.9(C) and installed using Class 2, Class 3, or Class 4 wiring methods in compliance with 722.136 shall not be installed in the same cable, cable tray, raceway, or cable routing assembly with PLFA circuits or cables.~~

~~**(G)** Manholes.~~

~~Outside plant communications, CATV, and optical fiber cables shall be permitted to be installed together in manholes.~~

~~Informational Note: See IEEE C2-2023, *National Electrical Safety Code,* Rules 323 and 341 for information on cable installation in manholes.~~

~~**(H)** Limited-Use and Under-Carpet Limited-Energy Cables.~~

~~Limited-use and under-carpet limited-energy cables shall not be installed in cable trays or cable routing assemblies.~~

~~**722.113** Limited-Energy Circuits with Electric Light, Power, Class 1, Non-Power-Limited Fire Alarm, and Medium-Power Network-Powered Broadband Communications Circuits in Raceways, Compartments, and Boxes.~~

~~Separation shall be provided in accordance with 722.112(A) for limited energy cables and conductors, except as provided in 722.164 for optical fiber cables.~~

~~**(A)** General.~~

~~Limited energy cables shall be separated by at least 50 mm (2 in.) from conductors of any electric light, power, Class 1, non-power-limited fire alarm, or medium-power network-powered broadband communications circuits and shall not be placed the same raceway, compartment, enclosure, manhole, outlet box, device box, or similar, unless permitted by the 722.113(A)(1) through 722.113(A)(10) :~~

~~*Exception: Low-power and medium-power network-powered broadband communications circuit cables shall be permitted in the same raceway, cable tray, box, enclosure, or cable routing assembly.*~~

~~**(1)** Separated by Barriers.~~

~~Limited energy cables shall be permitted to be placed in any raceway, compartment, outlet box, junction box, or other enclosure with conductors of electric light, power, Class 1, non-power-limited fire alarm, or medium-power network-powered broadband communications circuits if the conductors of electric light, power, Class 1, non-power-limited fire alarm, and medium-power network-powered broadband communications circuits are separated from the limited energy and cables by a permanent barrier that maintains the 50 mm (2 in.) separation or a listed divider.~~

~~**(2)** Raceways Within Enclosures.~~

~~Limited energy cables shall be permitted to share the same enclosure with other systems if the limited energy cables are separated by a raceway within the enclosure.~~

~~**(3)** Associated Systems Within Enclosures.~~

~~Limited energy cables shall be permitted to be placed in outlet boxes, junction boxes, compartments, or similar with power conductors where such conductors are introduced solely for power supply to the limited energy equipment and 722.113(A)(3)(a) or 722.113(A)(3)(b) applies.~~

~~(a) The power circuit conductors shall be routed within the enclosure to maintain a minimum 6 mm (0.25 in.) separation from the limited energy cables.~~

~~(b) The circuit conductors operate at 150 volts or less to ground and the limited energy circuit conductors shall be either of the following:~~

~~(3) Installed as a Class 1 circuit~~

~~(4) A limited energy cable of CL3, CL3R, CL3P or a permitted substitute and the conductors that emerge from the cable jacket are separated by a minimum 6 mm (0.25 in.) or by a nonconductive barrier from all other conductors~~

~~**(4)** Enclosures with Single Opening.~~

~~Circuit conductors of limited energy cables entering compartments, enclosures, device boxes, outlet boxes, or similar shall be permitted to be installed with Class 1, non-power-limited fire alarm, and medium-power network-powered broadband communications circuits where they are introduced solely to connect the equipment connected to the limited energy circuits. If the limited energy circuit conductors must enter an enclosure that is provided with a single opening, they shall be permitted to enter through a single fitting (such as a tee) if the conductors are separated from the conductors of the other circuits by a continuous and firmly fixed nonconductor, such as flexible tubing.~~

~~**(5)** Elevators.~~

~~(a) *Traveling Cables* . Separation of circuits shall not be required in elevator traveling cables constructed in accordance with 620.36 .~~

~~(b) *Hoistways* . In hoistways, cables shall be installed in rigid metal conduit, rigid nonmetallic conduit, intermediate metal conduit, liquidtight flexible nonmetallic conduit, or electrical metallic tubing. For elevators or similar equipment, these conductors shall be permitted to be installed as provided in 620.21 .~~

~~**(6)** In Raceways or Cables.~~

~~Separation shall not be required if either of the following applies:~~

~~(1) The conductors of electric light, power, Class 1, non-power-limited fire alarm, and medium-power network-powered broadband communications circuits are in a raceway or in metal-sheathed, metal-clad, nonmetallic-sheathed, Type AC or Type UF cables.~~

~~(2) The limited energy cable conductors are installed in a raceway or in metal-sheathed, metal-clad, nonmetallic-sheathed, Type TC, or Type UF cables.~~

~~**(7)** Protected by Firmly Fixed Nonconductors.~~

~~Separation shall not be required if the limited energy cables are permanently separated from the conductors of electric light, power, Class 1, non-power-limited fire alarm, and medium-power network-powered broadband communications circuits by a continuous and firmly fixed nonconductor, such as porcelain tubes or flexible tubing, in addition to the insulation on the wire.~~

(8) Manholes.

Underground limited-energy circuit conductors and cables in a manhole shall be permitted to be installed with Class 1, non-power-limited fire alarm, and medium-power network-powered broadband communications circuits if one of the following conditions is met:

(1) The electric light, power, Class 1, non-power-limited fire alarm, and medium-power network-powered broadband communications circuit conductors are in a metal-enclosed cable or Type UF cable.

(2) The limited-energy circuit conductors are permanently and effectively separated from the conductors of other circuits by a continuous and firmly fixed nonconductor, such as flexible tubing, in addition to the insulation or covering on the wire.

(3) The limited-energy circuit conductors are permanently and effectively separated from conductors of the other circuits and securely fastened to racks, insulators, or other approved supports.

(9) Cable Trays.

Limited-energy circuit conductors shall be permitted to be installed in cable trays if the conductors of the electric light, Class 1, and non-power-limited fire alarm circuits are separated by a solid fixed barrier of a material compatible with the cable tray or if the limited-energy circuits are installed in Type MC cable.

(10) If Protected.

Limited-energy circuits shall be permitted to be installed together with the conductors of electric light, power, Class 1, non-power-limited fire alarm, and medium-power network-powered broadband communications circuits if they are functionally associated and installed using Class 1 wiring methods in accordance with 724.46.

722.120 Application and Installation of Limited-Energy Cables in Buildings.

The application and installation of limited-energy cables shall comply with Table 722.120 .

Table 722.120 Applications of Limited-Energy Cables

Applications Cable Type [1] Plenum Riser General-Purpose Limited-Use Under Carpet PLTC In ducts specifically fabricated for environmental air as described in 720.22(C) [2] Cables in lengths as short as practicable to perform the required function Y N N N N N In metal raceway that complies with 720.22(B) Y Y Y Y N Y In other spaces used for environmental air (plenums) as described in 720.22(C) Cables in other spaces used for environmental air Y N N N N N Cables in metal raceway that complies with 720.22(C) Y Y Y Y N Y Cables in plenum communications raceways Y N N N N N - Cables in plenum cable routing assemblies Y N N N N N - Cables supported by open metal cable trays Y N N N N N - Cables, or cables installed in raceways or cable routing assemblies supported by solid bottom metal cable trays with solid metal covers Y Y Y Y N Y In risers and vertical runs Cables in vertical runs penetrating one or more floors and in vertical runs in a shaft Y Y N N N N - Cables in metal raceways Y Y Y Y N Y - Cables in fireproof shafts Y Y Y N N Y - Cables in plenum communications raceways Y Y N N N N - Cables in plenum cable routing assemblies Y Y N N N N - Cables in riser communications raceways Y Y N N N N - Cables in riser cable routing assemblies Y Y N N N N - Cables in one- and two-family dwellings Y Y Y Y [3] N Y Cables and innerducts installed in metal raceways in a riser having firestops at each floor [2] Cables Y Y Y Y N Y Cables in plenum communications raceways (innerduct) Y Y Y Y N Y Cables in riser communications raceways (innerduct) Y Y Y Y N Y Cables in general-purpose communications raceways (innerduct) Y Y Y Y N Y In fireproof riser shafts having firestops at each floor [2] Cables Y Y Y N N Y Cables in plenum communications raceways or plenum cable routing assemblies Y Y Y N N Y Cables in riser communications raceways or riser cable routing assemblies Y Y Y N N Y - Cables in general-purpose communications raceways or general-purpose cable routing assemblies Y Y Y N N Y In cable trays Outdoors N N N N N Y Cables, or cables in plenum, riser, or general-purpose communications raceways, installed indoors Y Y Y N N Y In cross-connect arrays Cables, and cables in plenum, riser, or general-purpose communications raceways or cable routing assemblies Y Y Y N N Y In one-, two-, and multifamily dwellings, and in building locations other than the locations covered above Cables Y Y Y Y [3] N Y Cables in plenum, riser, or general-purpose communications raceways or cable routing assemblies, or raceways recognized in Chapter 3 Y Y Y Y N Y - Cables in nonconcealed spaces Y Y Y Y [4] Y Y - Under carpet, floor covering, modular flooring, and planks N N N N Y N

[1] "N" indicates that the cable type shall not be installed in the application. "Y" indicates that the cable type shall be permitted to be installed in the application, subject to any limitations described in this article or the articles described in 722.4(C).

[2] In 720.22(B), cables shall be permitted in ducts specifically fabricated for environmental air only if directly associated with the air distribution system.

[3] Limited-use cable shall be permitted to be installed only in one-, two-, and multifamily dwellings and only if the cable is smaller in diameter than 6.35 mm (0.25 in.).

[4] The exposed length of cable shall not exceed 3.05 m (10 ft).

722.121 Installations.

(A) Industrial Establishments.

In industrial establishments where the conditions of maintenance and supervision ensure that only qualified persons service the installation, Type PLTC cable shall be permitted in accordance with either of the following:

(1) Where the cable is not subject to physical damage, Type PLTC cable that complies with the crush and impact requirements of Type MC cable and is identified as Type PLTC-ER for such use shall be permitted to be exposed between the cable tray and the utilization equipment or device. The cable shall be continuously supported and protected against physical damage using mechanical protection such as dedicated struts, angles, or channels. The cable shall be supported and secured at intervals not exceeding 1.8 m (6 ft). Where not subject to physical damage, Type PLTC-ER cable shall be permitted to transition between cable trays and between cable trays and utilization equipment or devices for a distance not to exceed 1.8 m (6 ft) without continuous support. The cable shall be mechanically supported where exiting the cable tray to ensure that the minimum bending radius is not exceeded.

(2) Type PLTC cable, with a metallic sheath or armor in accordance with 722.100(A)(6) , shall be permitted to be installed exposed. The cable shall be continuously supported and protected against physical damage using mechanical protection such as dedicated struts, angles, or channels. The cable shall be secured at intervals not exceeding 1.8 m (6 ft).

722.122 Limited-Energy Cable Substitutions.

The substitutions for cables listed in Table 722.120 and illustrated in Figure 722.122 shall be permitted. Where substitute cables are installed, the installation requirements of the articles described in 722.4 shall also apply. CI cables shall be permitted to be installed to provide 2-hour circuit integrity. See 722.180(A) .

Informational Note: See 722.100 for information on Types CMP, CMR, CM, and CMX.

Table 722.122 Permitted Limited-Energy Cable Substitutions

Cable Type Permitted Substitutions CL3P CMP CL2P CMP, CL3P CL3R CMP, CL3P, CMR CL2R CMP, CL3P, CL2P, CMR, CL3R PLTC None CL3 CMP, CL3P, CMR, CL3R, CMG, CM, PLTC CL2 CMP, CL3P, CL2P, CMR, CL3R, CL2R, CMG, CM, PLTC, CL3 CL3X CMP, CL3P, CMR, CL3R, CMG, CM, PLTC, CL3, CMX CL2X CMP, CL3P, CL2P, CMR, CL3R, CL2R, CMG, CM, PLTC, CL3, CL2, CMX, CL3X FPLP CMP FPLR CMP, FPLP, CMR FPL CMP, FPLP, CMR, FPLR, CMG, CM OFNP None OFCP OFNP OFNR OFNP OFCR OFNP, OFCP, OFNR OFNG, OFN OFNP, OFNR OFCG, OFC OFNP, OFCP, OFNR, OFCR, OFNG, OFN CMUC None

Figure 722.122 Limited-Energy and Communications Cable Substitution Hierarchy.

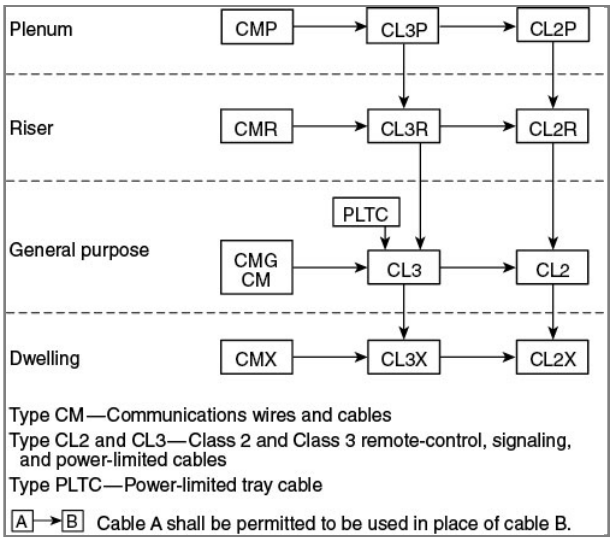

~~**722.130** Application of Cables Used for Communications Circuits, Communications Wires, Cables, and Raceways and Listed Cable Routing Assemblies.~~

~~Permitted and nonpermitted applications of listed communications wires and cables, coaxial cables, network-powered broadband communications system cables shall be in accordance with Table 722.130 :~~

~~The permitted applications shall be subject to the installation requirements of 722.110 :~~

~~Table 722.130 Applications of Listed Communications Wires, Cables, Listed CATV-Type Coaxial Cables, and Listed Network-Powered Broadband Communications Cables in Buildings~~

~~Applications Wire and Cable Type Plenum Riser BMR General-Purpose BM Limited-Use Under-carpet BMU, BLU Hybrid Power and Communications Cables Communications Wires In ducts specifically fabricated for environmental air as described in 720.22(B) In fabricated ducts Y N N N N N N N N N In metal raceway that complies with 720.22(B) Y Y Y Y Y Y N N N Y In other spaces used for environmental air (plenums) as described in 720.22(C) In other spaces used for environmental air Y N N N N N N N N N In metal raceway that complies with 720.22(C) Y Y Y Y Y Y N N N Y - In plenum communications raceways Y N N N N N N N N N - In plenum cable routing assemblies Y N N N N N N N N N - Supported by open metal cable trays Y N N N N N N N N N - Supported by solid bottom metal cable trays with solid metal covers Y Y Y Y Y Y N N N N In risers In vertical runs Y Y Y N N N N N N N - In metal raceways Y Y Y Y Y Y N N N N - In fireproof shafts Y Y Y Y Y Y N N N N - In plenum communications raceways Y Y N N N N N N N N - In plenum cable routing assemblies Y Y N N N N N N N N - In riser communications raceways Y Y N N N N N N N N - In riser cable routing assemblies Y Y N N N N N N N N - In one- and two-family dwellings Y Y Y Y Y Y N N Y N Within buildings in other than air-handling spaces and risers General Y Y Y Y Y Y N N N N In one- and two-family dwellings Y Y Y Y Y Y Y N Y N In multifamily dwellings Y Y Y Y Y Y Y N N N - In nonconcealed spaces Y Y Y Y Y Y Y N N N - Supported by cable trays Y Y Y Y Y N N N N N - Under carpet, modular flooring, and planks N N N N N N Y N N N - In distributing frames and cross-connect arrays Y Y N Y N N N N N Y - In rigid metal conduit (RMC) and intermediate metal conduit (IMC) Y Y Y Y Y Y Y Y Y Y - In any raceway recognized in Chapter 3 Y Y Y Y Y Y N N N Y - In plenum communications raceways Y Y N Y N N N N N Y - In plenum cable routing assemblies Y Y N Y N N N N N Y - In riser communications raceways Y Y N Y N N N N N Y - In riser cable routing assemblies Y Y N Y N N N N N Y - In general-purpose communications raceways Y Y N Y N N N N N Y - In general-purpose cable routing assemblies Y Y N Y N N N N N Y~~

~~Note: An "N" in the table indicates that the cable type shall not be installed in the application. A "Y" indicates that the cable type shall be permitted to be installed in the application subject to the limitations described in 722.131. The Riser column includes all riser cables except BMR, and the General-Purpose column includes all general-purpose cables except BM.~~

~~Informational Note No. 1: Table 722.110 covers the applications of listed communications wires, cables, and raceways in buildings.~~

~~Informational Note No. 2: See 722.131(B) for restrictions to the installation of communications cables in fabricated ducts.~~

~~**722.131** Installation of Cables Used for Communications Circuits, Communications Wires, Cable Routing Assemblies, and Communications Raceways.~~

~~**(A)** General.~~

~~Installation of cables used for communications circuits, communications wires, cable routing assemblies, and communications raceways shall comply with 722.131(A) through 722.131(L) . Installation of cable routing assemblies and communications raceways shall comply also with 722.110 . Types of cables used by this section shall be identified in Table 722.131(A) :~~

~~Table 722.131(A) Cables Used for Communications Circuits~~

~~- Listed Cable Types Plenum cables CMP, CATVP, BLP, OFNP, OFCP Riser cables CMR, CATVR, BMR, BLR, OFNR, OFCR General-purpose cables CMG, CM, CATV, BM, BL, OFNG, OFN, OFCG, OFC Limited-use cables CMX, CATVX, BLX Under-carpet CMUC Underground BMU, BLU~~

~~**(B)** Ducts Specifically Fabricated for Environmental Air.~~

~~Installations of cables used for communications circuits, communications wires, cable routing assemblies, and communications raceways in ducts specifically fabricated for environmental air shall be in accordance with 722.131(B)(1) and 722.131(B)(2) :~~

~~**(1)** Uses Permitted.~~

~~The following cables shall be permitted in ducts specifically fabricated for environmental air as described in 720.22(B) if they are directly associated with the air distribution system:~~

(1) ~~Plenum cables up to 1.22 m (4 ft) in length~~

(2) ~~Plenum, rise, general-purpose, and limited-use cables installed in raceways that are installed in compliance with 720.22(B)~~

~~**(2)** Uses Not Permitted.~~

~~The following cables, wires, cable routing assemblies, and communications raceways shall not be permitted in ducts specifically fabricated for environmental air as described in 720.22(B) :~~

(1) ~~Plenum, riser, and general-purpose communications raceways~~

(2) ~~Plenum, riser, and general-purpose cable routing assemblies~~

(3) ~~Riser, general-purpose, and limited-use cables~~

(4) ~~Type CMUC cables and wires~~

(5) ~~Types BMU and BLU cables~~

(6) ~~Communications wires~~

(7) ~~Hybrid power and communications cables~~

~~Informational Note: See NFPA 90A-2024, *Standard for the Installation of Air-Conditioning and Ventilating Systems* , for information on fire protection of wiring installed in fabricated ducts.~~

~~**(C)** Other Spaces Used for Environmental Air (Plenums).~~

~~Installations of cables used for communications circuits, communications wires, cable routing assemblies, and communications raceways in other spaces used for environmental air (plenums) shall be in accordance with 722.131(C)(1) and 722.131(C)(2) :~~

~~**(1)** Uses Permitted.~~

~~The following cables, wires, cable routing assemblies, and communications raceways shall be permitted in other spaces used for environmental air as described in 720.22(C) :~~

(1) ~~Plenum cables~~

(2) ~~Plenum communications raceways~~

(3) ~~Plenum cable routing assemblies~~

(4) ~~Plenum cables installed in plenum communications raceways~~

(5) ~~Plenum cables installed in plenum cable routing assemblies~~

(6) ~~Plenum cables and plenum communications raceways supported by open metal cable tray systems~~

(7) ~~Plenum, riser, general-purpose, and limited-use cables, and communications wires installed in raceways that are installed in compliance with 720.22(C)~~

(8) ~~Plenum, riser, general-purpose, limited-use cables and plenum, riser, and general-purpose communications raceways supported by solid bottom metal cable trays with solid metal covers in other spaces used for environmental air (plenums) as described in 720.22(C)~~

(9) ~~Plenum, riser, general-purpose, and limited-use cables installed in plenum, riser, and general-purpose communications raceways supported by solid bottom metal cable trays with solid metal covers in other spaces used for environmental air (plenums) as described in 720.22(C)~~

~~**(2)** Uses Not Permitted.~~

~~The following cables, wires, cable routing assemblies, and communications raceways shall not be permitted in other spaces used for environmental air as described in 720.22(C) :~~

(1) ~~Riser, general-purpose, and limited-use cables~~

(2) ~~Riser and general-purpose communications raceways~~

(3) ~~Riser and general-purpose cable routing assemblies~~

(4) ~~Type CMUC cables and wires~~

(5) ~~Types BMR, BM, BMU, and BLU cables~~

(6) ~~Communications wires~~

(7) ~~Hybrid power and communications cables~~

~~Informational Note: See NFPA 90A-2024, *Standard for the Installation of Air-Conditioning and Ventilating Systems* , for information on fire protection of wiring installed in other spaces used for environmental air.~~

~~**(D)** Risers — Cables, Cable Routing Assemblies, and Communications Raceways in Vertical Runs.~~

~~Installations of cables used for communications circuits, communications wires, cable routing assemblies, and communications raceways in risers shall be in accordance with 722.131(D)(1) and 722.131(D)(2) :~~

~~**(1)** Uses Permitted.~~

~~The following cables, cable routing assemblies, and communications raceways shall be permitted in vertical runs penetrating one or more floors and in vertical runs in a shaft:~~

(1) ~~Plenum and riser cables~~

(2) ~~Plenum and riser communications raceways~~

(3) ~~Plenum and riser cable routing assemblies~~

(4) ~~Plenum and riser cables installed in the following:~~

  (5) ~~Plenum communications raceways~~

  (6) ~~Riser communications raceways~~

  (7) ~~Plenum cable routing assemblies~~

  (8) ~~Riser cable routing assemblies~~

~~**(2)** Uses Not Permitted.~~

~~The following cables, wires, cable routing assemblies, and communications raceways shall not be permitted in risers:~~

(1) ~~General-purpose and limited-use cables~~

(2) ~~General-purpose communications raceways~~

(3) ~~General-purpose cable routing assemblies~~

(4) ~~Type CMUC cables and wires~~

(5) ~~Types BMR, BM, BMU, and BLU cables~~

(6) ~~Communications wires~~

(7) ~~Hybrid power and communications cables~~

~~Informational Note: See 720.21 for firestop requirements for floor penetrations.~~

~~**(E)** Risers — Cables and Innerducts in Metal Raceways.~~

~~Installations of cables used for communications circuits, communications wires, cable routing assemblies, and communications raceways in metal raceways in a riser having firestops at each floor shall be in accordance with 722.131(E)(1) and 722.131(E)(2) :~~

~~**(1)** Uses Permitted.~~

~~The following cables and innerducts shall be permitted in metal raceways in a riser having firestops at each floor:~~

(1) ~~Plenum, riser, general-purpose, and limited-use cables~~

(2) ~~Plenum, riser, and general-purpose communications raceways (innerduct)~~

(3) ~~Plenum, riser, general-purpose, and limited-use cables installed in the following:~~

(4) ~~Plenum communications raceways (innerduct)~~

(5) ~~Riser communications raceways (innerduct)~~

(6) ~~General-purpose communications raceways (innerduct)~~

~~**(2)** Uses Not Permitted.~~

~~The following cables, wires, cable routing assemblies, and communications raceways shall not be permitted in metal raceways in a riser having firestops at each floor:~~

(1) ~~Plenum, riser, and general-purpose cable routing assemblies~~

(2) ~~Type CMUC cables and wires~~

(3) ~~Types BMR, BM, BMU, and BLU cables~~

(4) ~~Communications wires~~

(5) ~~Hybrid power and communications cables~~

~~Informational Note: See 720.21 for firestop requirements for floor penetrations.~~

~~**(F)** Risers — Cables, Cable Routing Assemblies, and Communications Raceways in Fireproof Shafts.~~

~~Installations of cables used for communications circuits, communications wires, cable routing assemblies, and communications raceways in fireproof riser shafts having firestops at each floor shall be in accordance with 722.131(F)(1) and 722.131(F)(2) :~~

~~**(1)** Uses Permitted.~~

~~The following cables, cable routing assemblies, and communications raceways shall be permitted to be installed in fireproof riser shafts having firestops at each floor:~~

(1) ~~Plenum, riser, general-purpose, and limited-use cables~~

(2) ~~Plenum, riser, and general-purpose communications raceways~~

(3) ~~Plenum, riser, and general-purpose cable routing assemblies~~

(4) ~~Plenum, riser, general-purpose, and limited-use cables installed in the following:~~

(5) ~~Plenum communications raceways~~

(6) ~~Riser communications raceways~~

(7) ~~General-purpose communications raceways~~

(8) ~~Plenum cable routing assemblies~~

(9) ~~Riser cable routing assemblies~~

(10) ~~General-purpose cable routing assemblies~~

~~**(2)** Uses Not Permitted.~~

~~The following cables, wires, cable routing assemblies, and communications raceways shall not be permitted in metal raceways in fireproof riser shafts having firestops at each floor:~~

(1) ~~Type CMUC cables and wires~~

(2) ~~Type BMU and BLU cables~~

(3) ~~Communications wires~~

(4) ~~Hybrid power and communications cables~~

~~Informational Note: See 720.21 for firestop requirements for floor penetrations.~~

~~**(G)** Risers — One- and Two-Family Dwellings.~~

~~Installations of cables used for communications circuits, communications wires, cable routing assemblies, and communications raceways in risers in one- and two-family dwellings shafts shall be in accordance with 722.131(G)(1) and 722.131(G)(2) :~~

~~**(1)** Uses Permitted.~~

~~The following cables, cable routing assemblies, and communications raceways shall be permitted in one- and two-family dwellings:~~

(1) ~~Plenum, riser, and general-purpose cables~~

(2) ~~Limited-use cables less than 6 mm (0.25 in.) in diameter~~

(3) ~~Plenum, riser, and general-purpose communications raceways~~

(4) ~~Plenum, riser, and general-purpose cable routing assemblies~~

(5) ~~Plenum, riser, and general-purpose cables installed in the following:~~

(6) ~~Plenum communications raceways~~

(7) ~~Riser communications raceways~~

(8) ~~General-purpose communications raceways~~

(9) ~~Plenum cable routing assemblies~~

(10) ~~Riser cable routing assemblies~~

(11) ~~General-purpose cable routing assemblies~~

~~**(2)** Uses Not Permitted.~~

~~The following cables and wires shall not be permitted in risers in one- and two-family dwellings:~~

(1) ~~Type CMUC cables and wires~~

(2) ~~Type BMU and BLU cables~~

(3) ~~Communications wires~~

(4) ~~Hybrid power and communications cables~~

~~**(H)** Cable Trays.~~

~~Installations of cables used for communications circuits, communications wires, cable routing assemblies, and communications raceways supported by cable trays shall be in accordance with 722.131(H)(1) and 722.131(H)(2) :~~

~~**(1)** Uses Permitted.~~

~~The following wires, cables, and communications raceways shall be permitted to be supported by cable trays:~~

(1) ~~Plenum, riser, and general-purpose cables~~

(2) ~~Plenum, riser, and general-purpose communications raceways~~

(3) ~~Communications wires, plenum, riser, and general-purpose cables installed in the following:~~

(4) ~~Plenum communications raceways~~

(5) ~~Riser communications raceways~~

(6) ~~General-purpose communications raceways~~

~~**(2)** Uses Not Permitted.~~

~~The following cables and wires shall not be supported by cable trays:~~

(1) ~~Limited-use cables~~

(2) ~~Type CMUC cables and wires~~

(3) ~~Type BMU and BLU cables~~

(4) ~~Communications wires~~

(5) ~~Hybrid power and communications cables~~

~~**(I)** Distributing Frames and Cross-Connect Arrays.~~

~~Installations of cables used for communications circuits, communications wires, cable routing assemblies, and communications raceways in distributing frames and cross-connect arrays shall be in accordance with 722.131(I)(1) and 722.131(I)(2) :~~

~~**(1)** Uses Permitted.~~

~~The following wires, cables, cable routing assemblies, and communications raceways shall be permitted to be installed in distributing frames and cross-connect arrays:~~

(1) ~~Plenum, riser, general-purpose cables, and communications wires~~

(2) ~~Plenum, riser, and general-purpose communications raceways~~

(3) ~~Plenum, riser, and general-purpose cable routing assemblies~~

(4) ~~Communications wires, plenum, riser, and general-purpose cables installed in the following:~~

(5) ~~Plenum communications raceways~~

(6) ~~Riser communications raceways~~

(7) ~~General-purpose communications raceways~~

(8) ~~Plenum cable routing assemblies~~

(9) ~~Riser cable routing assemblies~~

(10) ~~General-purpose cable routing assemblies~~

~~**(2)** Uses Not Permitted.~~

~~The following cables and wires shall not be installed in distributing frames and cross-connect arrays:~~

(1) ~~Types BMR, BM, BMU, and BLU cables~~

(2) ~~Limited-use cables~~

(3) ~~Type CMUC cables and wires~~

(4) ~~Hybrid power and communications cables~~

~~**(J)** Other Building Locations.~~

~~Installations of cables used for communications circuits, cable communications wires, routing assemblies, and communications raceways in building locations other than those covered in 722.131(B) through 722.131(I) shall be in accordance with 722.131(J)(1) and 722.131(J)(2) :~~

~~**(1)** Uses Permitted.~~

~~The following wires, cables, cable routing assemblies, and communications raceways shall be permitted to be installed in building locations other than the locations covered in 722.131(B) through 722.131(I) :~~

(1) ~~Plenum, riser, and general-purpose cables~~

(2) ~~Limited-use cables with a maximum of 3 m (10 ft) of exposed length in nonconcealed spaces~~

(3) ~~Plenum, riser, and general-purpose communications raceways~~

(4) ~~Plenum, riser, and general-purpose cable routing assemblies~~

(5) ~~Communications wires, plenum, riser, and general-purpose cables installed in the following:~~

(6) ~~Plenum communications raceways~~

(7) ~~Riser communications raceways~~

(8) ~~General-purpose communications raceways~~

(9) ~~Plenum, riser, and general-purpose cables installed in the following:~~

(10) ~~Plenum cable routing assemblies~~

(11) ~~Riser cable routing assemblies~~

(12) ~~General-purpose cable routing assemblies~~

(13) ~~Communications wires and plenum, riser, general-purpose, and limited-use cables installed in raceways recognized in Chapter 3~~

(14) ~~Type CMUC under-carpet communications wires and cables installed under carpet, modular flooring, and planks.~~

~~**(2)** Uses Not Permitted.~~

~~The following cables, wires, cable routing assemblies, and communications raceways shall not be installed in building locations other than the locations covered in 722.131(B) through 722.131(I) :~~

(1) ~~Types BMU and BLU cables~~

(2) ~~Communications wires~~

(3) ~~Hybrid power and communications cables~~

~~**(K)** Multifamily Dwellings.~~

~~Installations of cables used for communications circuits, communications wires, cable routing assemblies, and communications raceways in multifamily dwellings shall be in accordance with 722.131(K)(1) and 722.131(K)(2) :~~

~~**(1)** Uses Permitted.~~

~~The following cables, cable routing assemblies, and communications raceways shall be permitted to be installed in multifamily dwellings in locations other than the locations covered in 722.131(B) through 722.131(G) :~~

(1) ~~Plenum, riser, and general-purpose cables~~

(2) ~~Limited-use cables less than 6 mm (0.25 in.) in diameter in nonconcealed spaces~~

(3) ~~Plenum, riser, and general-purpose communications raceways~~

(4) ~~Plenum, riser, and general-purpose cable routing assemblies~~

(5) ~~Communications wires and plenum, riser, and general-purpose cables installed in the following:~~

(6) ~~Plenum communications raceways~~

(7) ~~Riser communications raceways~~

(8) ~~General-purpose communications raceways~~

(9) ~~Plenum, riser, and general-purpose cables installed in the following:~~

(10) ~~Plenum cable routing assemblies~~

(11) ~~Riser cable routing assemblies~~

(12) ~~General-purpose cable routing assemblies~~

(13) ~~Communications wires and plenum, riser, general-purpose, and limited-use cables installed in raceways recognized in Chapter 3~~

(14) ~~Type CMUC under-carpet communications wires and cables installed under carpet, modular flooring, and planks~~

~~**(2)** Uses Not Permitted.~~

~~The following cables, cable routing assemblies, and communications raceways shall not be installed in multifamily dwellings in locations other than the locations covered in 722.131(B) through 722.131(G) :~~

(1) ~~Types BMU and BLU cables~~

(2) ~~Communications wires~~

(3) ~~Hybrid power and communications cable.~~

~~**(L)** One- and Two-Family Dwellings.~~

~~Installations of cables used for communications circuits, communications wires, cable routing assemblies, and communications raceways in one- and two-family dwellings in locations other than those covered in 722.131(B) through 722.131(F) shall be in accordance with 722.131(L)(1) and 722.131(L)(2) :~~

~~**(1)** Uses Permitted.~~

~~The following wires, cables, cable routing assemblies, and communications raceways shall be permitted to be installed in one- and two-family dwellings in locations other than the locations covered in 722.131(B) through 722.131(F) :~~

(1) ~~Plenum, riser, and general-purpose cables~~

(2) ~~Limited-use cables less than 6 mm (0.25 in.) in diameter~~

(3) ~~Plenum, riser, and general-purpose communications raceways~~

(4) ~~Plenum, riser, and general-purpose cable routing assemblies~~

(5) ~~Communications wires and plenum, riser, and general-purpose cables installed in the following:~~

(6) ~~Plenum communications raceways~~

(7) ~~Riser communications raceways~~

(8) ~~General-purpose communications raceways~~

(9) ~~Plenum, riser, and general-purpose cables installed in the following:~~

(10) ~~Plenum cable routing assemblies~~

(11) ~~Riser cable routing assemblies~~

(12) ~~General-purpose cable routing assemblies~~

(13) ~~Communications wires and plenum, riser, general-purpose, and limited-use cables installed in raceways recognized in Chapter 3~~

(14) ~~Type CMUC under-carpet communications wires and cables installed under carpet, modular flooring, and planks~~

(15) ~~Hybrid power and communications cable listed in accordance 722.100~~

~~**(2)** Uses Not Permitted.~~

~~The following cables, wires, cable routing assemblies, and communications raceways shall not be installed in one- and two-family dwellings in locations other than those covered in 722.131(B) through 722.131(F) :~~

(1) ~~Types BMU and BLU cables~~

(2) ~~Communications wires~~

~~**722.132** Permitted Substitutions of Listed Cables Used for Communications Circuits and Communications Wires.~~

(A) Permitted Substitutions of Listed Communications Cables.

The substitutions for communications cables listed in Table 722.132(A) and illustrated in Figure 722.132(A) shall be permitted.

Table 722.132(A) Listed Communications Cable Substitutions

Cable Type	Permitted Substitutions
CMR	CMP
CMG, CM	CMP, CMR
CMX	CMP, CMR, CMG, CM

Figure 722.132(A) Listed Communications Cable Substitution Hierarchy.

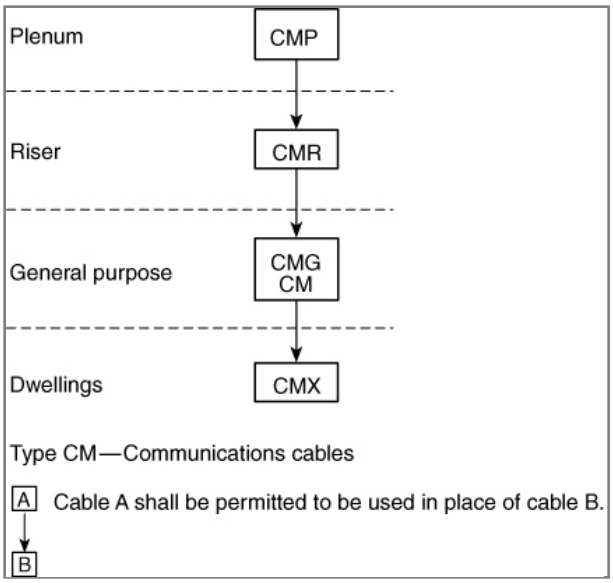

722.133 Installation of Communications Wires and Cables and CATV-Type Coaxial Cables.

Installation of communications wires and cables, from the protector to the equipment, or where no protector is required, communications wires and cables attached to the outside or inside of the building, shall comply with 722.133(A) and 722.133(B). Installation of CATV-type coaxial cables, beyond the point of grounding as defined in 750.48, shall comply with 722.133(A) through 722.133(C).

(A) In Raceways, Cable Trays, Boxes, Cables, Enclosures, and Cable Routing Assemblies.

(1) Other Circuits.

Communications cables and CATV-type coaxial cables shall be permitted in the same raceway, cable tray, box, enclosure, or cable routing assembly together and with jacketed cables of any of the following:

(1) Class 2 and Class 3 remote-control, signaling, and power-limited circuits in compliance with 645.6(E)(2) or Article 725, Parts I and II

(2) Power-limited fire alarm systems in compliance with Article 760, Parts I and III

(3) Nonconductive and conductive optical fiber cables in compliance with Article 722, Parts I and III

(4) Communications circuits in compliance with Article 722, Parts I and III

(5) Community antenna television and radio distribution systems in compliance with Article 722, Parts I and III

(6) Low-power network-powered broadband communications circuits in compliance with Article 722, Parts I and III

(2) Class 2 and Class 3 Circuits.

Class 1 circuits shall not be run in the same cable with communications circuits. Class 2 and Class 3 circuit conductors shall be permitted in the same listed communications cable with communications circuits.

(3) Electric Light, Power, Class 1, Non-Power-Limited Fire Alarm, and Medium-Power Network-Powered Broadband Communications Circuits in Raceways, Compartments, and Boxes.

Communications wires and cables and CATV-type coaxial cables shall not be placed in any raceway, compartment, outlet box, junction box, or similar fitting with conductors of electric light, power, Class 1, non-power-limited fire alarm, or medium-power network-powered broadband communications circuits.

Exception No. 1: Communications wires and cables and CATV-type coaxial cables shall be permitted to be placed in any raceway, compartment, outlet box, junction box, or other enclosures with conductors of electric light, power, Class 1, non-power-limited fire alarm, or medium-power network-powered broadband communications circuits where all of the conductors of electric light, power, Class 1, non-power-limited fire alarm, and medium-power network-powered broadband communications circuits are separated from all of the communications wires and cables and CATV-type coaxial cables by a permanent barrier or listed divider.

Exception No. 2: Communications wires and cables and CATV-type coaxial cables shall be permitted to be placed in outlet boxes, junction boxes, or similar fittings or compartments with power conductors where such conductors are introduced solely for power supply to the communications and coaxial cable system distribution equipment. The power circuit conductors shall be routed within the enclosure to maintain a minimum 6 mm (¼ in.) separation from the communications wires and cables and the CATV-type coaxial cables.

Exception No. 3: Separation of circuits shall not be required in elevator traveling cables constructed in accordance with 620.36.

(B) Other Applications.

Communications wires and cables and CATV-type coaxial cables shall be separated at least 50 mm (2 in.) from conductors of any electric light, power, Class 1, non-power-limited fire alarm, or medium-power network-powered broadband communications circuits.

Exception No. 1: Separation shall not be required where either of the following applies: (1) All of the conductors of electric light, power, Class 1, non-power-limited fire alarm, and medium-power network-powered broadband communications circuits are in a raceway or in metal-sheathed, metal-clad, nonmetallic-sheathed, Type AC, or Type UF cables. (2) All of the communications wires and cables and all of the CATV-type coaxial cables are encased in raceway.

Exception No. 2: Separation shall not be required where the communications wires and cables and CATV-type coaxial cables are permanently separated from the conductors of electric light, power, Class 1, non-power-limited fire alarm, and medium-power network-powered broadband communications circuits by a continuous and firmly fixed nonconductor, such as porcelain tubes or flexible tubing, in addition to the insulation on the wire.

~~**(C)** Support of Communications Wires and Cables and CATV-Type Coaxial Cables.~~

~~Raceways shall be used for their intended purpose. Communications wires and cables and CATV-type coaxial cables shall not be strapped, taped, or attached by any means to the exterior of any raceway as a means of support.~~

~~*Exception:* *Overhead (aerial) spans of communications drop wires, communications cables, and CATV-type coaxial cables shall be permitted to be attached to the exterior of a raceway-type mast intended for the attachment and support of such wires and cables.*~~

~~**(D)** Permitted Substitutions of Listed Coaxial Type CATV Cables.~~

~~The substitutions for coaxial cables in Table 722.133(D) and illustrated in Figure 722.133(D) shall be permitted.~~

~~Informational Note: The substitute cables in Table 722.133(D) and Figure 722.133(D) are only coaxial-type cables.~~

~~Table 722.133(D) Permitted Substitutions of Listed Coaxial Type CATV Cables~~

~~Cable Type~~	~~Permitted Substitutions~~
~~CATVP~~	~~CMP, BLP~~
~~CATVR~~	~~CATVP, CMP, CMR, BMR, BLP, BLR~~
~~CATV~~	~~CATVP, CMP, CATVR, CMR, CMG, CM, BMR, BM, BLP, BLR, BL~~
~~CATVX~~	~~CATVP, CMP, CATVR, CMR, CATV, CMG, CM, BMR, BM, BLP, BLR, BL, BLX~~

~~**Figure 722.133(D) Listed Coaxial Type CATV Cables Permitted Substitution Hierarchy.**~~

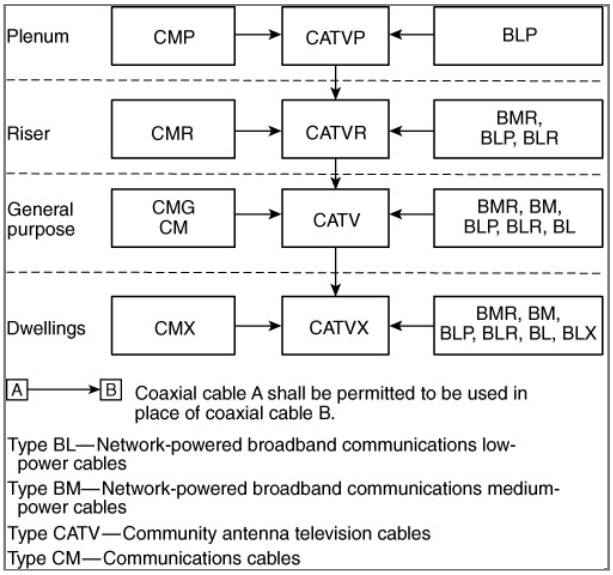

~~**(E)** Dwelling Unit Communications Outlet.~~

~~For new construction, a minimum of one communications outlet shall be installed with the dwelling in a readily accessible area and cabled to the service provider demarcation point.~~

~~**722.134** Installation of Network-Powered Broadband Communications Cables and Equipment.~~

~~Cable and equipment installations within buildings shall comply with 722.134(A) through 722.134(C), as applicable.~~

~~**(A)** Separation of Conductors.~~

~~**(1)** In Raceways, Cable Trays, Boxes, Enclosures, and Cable Routing Assemblies.~~

(a) ~~*Low- and Medium-Power Network-Powered Broadband Communications Circuit Cables.* Low- and medium-power network-powered broadband communications cables shall be permitted in the same raceway, cable tray, box, enclosure, or cable routing assembly.~~

(b) ~~*Low-Power Network-Powered Broadband Communications Circuit Cables with Other Circuits.* Low-power network-powered broadband communications cables shall be permitted in the same raceway, cable tray, box, enclosure, or cable routing assembly with jacketed cables of any of the following circuits:~~

(3) ~~Class 2 and Class 3 remote-control, signaling, and power-limited circuits in compliance with Article 725, Parts I and II~~

(4) ~~Power-limited fire alarm systems in compliance with Article 760, Parts I and III~~

(5) ~~Communications circuits in compliance with Article 722, Parts I and III~~

(6) ~~Nonconductive and conductive optical fiber cables in compliance with Article 722, Parts I and III~~

(7) ~~Community antenna television and radio distribution systems in compliance with Article 722, Parts I and III~~

(h) ~~*Medium-Power Network-Powered Broadband Communications Circuit Cables with Optical Fiber Cables and Other Communications Cables.* Medium-power network-powered broadband communications cables shall not be permitted in the same raceway, cable tray, box, enclosure, or cable routing assembly with conductors of any of the following circuits:~~

(9) ~~Communications circuits in compliance with Article 722, Parts I and III~~

(10) ~~Conductive optical fiber cables in compliance with Article 722, Parts I and III~~

(11) ~~Community antenna television and radio distribution systems in compliance with Article 722, Parts I and III~~

(l) ~~*Medium-Power Network-Powered Broadband Communications Circuit Cables with Other Circuits.* Medium-power network-powered broadband communications cables shall not be permitted in the same raceway, cable tray, box, enclosure, or cable routing assembly with conductors of any of the following circuits:~~

(13) ~~Class 2 and Class 3 remote-control, signaling, and power-limited circuits in compliance with Article 725, Parts I and II~~

(14) ~~Power-limited fire alarm systems in compliance with Article 760, Parts I and III~~

(o) ~~*Electric Light, Power, Class 1, Nonpowered Broadband Communications Circuit Cables.* Network-powered broadband communications cable shall not be placed in any raceway, cable tray, compartment, outlet box, junction box, or similar fittings with conductors of electric light, power, Class 1, or non-power-limited fire alarm circuit cables.~~

~~*Exception No. 1: Network-powered broadband communications cable shall be permitted to be placed in a raceway, cable tray, compartment, outlet box, junction box, or similar fittings with conductors of electric light, power, Class 1, or non-power-limited fire alarm circuit cables where all of the conductors of electric light, power, Class 1, non-power-limited fire alarm circuits are separated from all of the network-powered broadband communications cables by a permanent barrier or listed divider.*~~

~~*Exception No. 2: Where power circuit conductors are installed in in outlet boxes, junction boxes, or similar fittings or compartments where such conductors are introduced solely for power supply to the network-powered broadband communications system distribution equipment, the power circuit conductors shall be routed within the enclosure to maintain a minimum 6 mm (¼ in.) separation from network-powered broadband communications cables.*~~

~~**(2)** Other Applications.~~

~~Network-powered broadband communications cable shall be separated at least 50 mm (2 in.) from conductors of any electric light, power, Class 1, and non-power-limited fire alarm circuits.~~

~~*Exception No. 1: Separation shall not be required where either of the following applies:*~~

~~*(1) All of the conductors of electric light, power, Class 1, and non-power-limited fire alarm circuits are in a raceway or in metal-sheathed, metal-clad, nonmetallic-sheathed, Type AC, or Type UF cables.*~~

~~*(2) All of the network-powered broadband communications cables are encased in a raceway.*~~

~~*Exception No. 2: Separation shall not be required where the network-powered broadband communications cables are permanently separated from the conductors of electric light, power, Class 1, and non-power-limited fire alarm circuits by a continuous and firmly fixed nonconductor, such as porcelain tubes or flexible tubing, in addition to the insulation on the wire.*~~

~~**(B)** Support of Network-Powered Broadband Communications Cables.~~

~~Raceways shall be used for their intended purpose. Network-powered broadband communications cables shall not be strapped, taped, or attached by any means to the exterior of any conduit or raceway as a means of support.~~

~~**(C)** Splicing of Medium-Powered Network-Powered Communications Cables.~~

~~Where a medium-powered network-powered broadband communications cable is spliced or extended, a listed junction box or listed patch panel shall be used.~~

~~**(D)** Bends.~~

~~Bends in network broadband cable shall be made so as not to damage the cable. The radius of the curve of the inner edge of any bend shall not be less than 10 times the diameter of the cable.~~

~~Informational Note: See ANSI/TIA-568.0-E, *Generic Telecommunications Cabling for Customer Premises*, for information on bend radii of network broadband cable during different types of installation conditions.~~

~~**722.135** Underground Network-Powered Broadband Communications Cables Entering Buildings.~~

~~Underground network-powered broadband communications cables entering buildings shall comply with 722.135(A) and 722.135(B).~~

~~**(A)** Protection from Physical Damage.~~

~~Direct-buried cable, conduit, or other raceways shall be installed to meet the minimum cover requirements of Table 722.135(A). In addition, direct-buried cables emerging from the ground shall be protected by enclosures, raceways, or other approved means extending from the minimum cover distance required by Table 830.47(A) below grade to a point at least 2.5 m (8 ft) above finished grade. In no case shall the protection be required to exceed~~

450 mm (18 in.) below finished grade. Types BMU and BLU direct-buried cables emerging from the ground shall be installed in rigid metal conduit (RMC), intermediate metal conduit (IMC), rigid nonmetallic conduit, or other approved means extending from the minimum cover distance required by Table 830.47(A) below grade to the point of entrance.

Exception: Protection from physical damage shall not be required if a low-power network-powered broadband communications circuit is equipped with a listed fault protection device that is located on the network side of the network-powered broadband cable being protected and the device is appropriate to the network-powered broadband communications cable used.

Table 722.135(A) Network-Powered Broadband Communications Systems Minimum Cover Requirements.

Location of Wiring Method or Circuit	Direct Burial Cables	Rigid Metal Conduit (RMC) or Intermediate Metal Conduit (IMC)	Nonmetallic Raceways Listed for Direct Burial; Without Concrete Encasement or Other Approved Raceways
	mm in.	mm in.	mm in.
All locations not specified below	450 18	150 6	300 12
In trench below 50 mm (2 in.) thick concrete or equivalent	300 12	150 6	150 6
Under a building (in raceway only)	0 0	0 0	0 0
Under minimum of 100 mm (4 in.) thick concrete exterior slab with no vehicular traffic and the slab extending not less than 150 mm (6 in.) beyond the underground installation	300 12	100 4	100 4
One- and two-family dwelling driveways and outdoor parking areas and used only for dwelling-related purposes	300 12	300 12	300 12

Notes:

1. Cover shall be the shortest distance measured between a point on the top surface of any direct-buried cable, conduit, or other raceway and the top surface of finished grade, concrete, or similar cover.

2. Raceways approved for burial only where concrete encased shall require a concrete envelope not less than 50 mm (2 in.) thick.

3. Lesser depths shall be permitted where cables rise for terminations or splices or where access is otherwise required.

4. Where solid rock is encountered, all wiring shall be installed in metal or nonmetallic raceway permitted for direct burial. The raceways shall be covered by a minimum of 50 mm (2 in.) of concrete extending down to rock.

(B) Pools.

Cables located under the pool or within the area extending 1.5 m (5 ft) horizontally from the inside wall of the pool shall meet those clearances and requirements specified in 680.11 .

722.136 Permitted Substitutions of Network-Powered Broadband Communications System Cables.

The substitutions for network-powered broadband system cables listed in Table 722.136 shall be permitted.

Table 722.136 Permitted Substitutions of Network-Powered Broadband Communications System Cables.

Cable Type	Permitted Cable Substitutions
BM	BMR BLP CMP, CL3P
BLR	CMP, CL3P, CMR, CL3R, BLP, BMR
BL	CMP, CMR, CM, CMG, CL3P, CL3R, CL3, BMR, BM, BLP, BLR
BLX	CMP, CMR, CM, CMG, CMX, CL3P, CL3R, CL3, CL3X, BMR, BM, BLP, BRP, BL

722.140 Applications, Installations and Wiring Methods for Class 2 or Class 3 Circuits.

(A) General.

Class 2 and Class 3 circuits on the load side of the power source shall be permitted to be installed using wiring methods and materials in accordance with 722.140(A) , 722.140(B) , or a combination of both.

(1) Class 1 Wiring Methods and Materials.

Use of Class 1 wiring methods for Class 2 and Class 3 circuits shall be permitted. Separation from electric light, power, Class 1, non-power-limited fire alarm circuit conductors, and medium-power network-powered broadband communications cables shall comply with 725.136 .

Exception: The ampacity adjustment factors given in 310.15(C)(1) shall not apply.

(2) Class 2 and Class 3 Wiring Methods and Materials.

Conductors on the load side of the power source shall be insulated in accordance with 722.100 and 722.102 and be installed in accordance with 722.110 , 722.140(B) , and 725.136 .

Exception No. 1: As provided for in 620.21 for elevators and similar equipment.

Exception No. 2: Other wiring methods and materials installed in accordance with 725.3 shall be permitted to extend or replace the conductors and cables described in 722.100(A) and permitted by 722.140(A)(2) .

Exception No. 3: Bare Class 2 conductors shall be permitted as part of a listed intrusion protection system where installed in accordance with the listing instructions for the system.

(B) Cables Transmitting Power and Data.

(1) Classification of Circuits.

Circuits carrying data and power shall be classified as electrical power circuits in accordance with the type of electrical power carried.

Exception: PoE circuits shall be classified as communications and Class 2 or Class 3.

(2) Bundling of Cables Transmitting Power and Data.

Sections 722.140(B)(1) and 722.140(B)(2) shall apply to Class 2 and Class 3 circuits that transmit power and data to a powered device over listed cabling. Section 720.30 and Article 725, Parts I and III shall apply to Class 2 and Class 3 circuits that transmit power and data. The conductors that carry power for the data circuits shall be copper. The current in the power circuit shall not exceed the current limitation of the connectors.

Informational Note No. 1: One example of the use of cables that transmit power and data is the connection of closed-circuit TV cameras (CCTV).

Informational Note No. 2: The 8P8C connector is in widespread use with powered communications systems. IEC 60603-7-2008, Connectors for electronic equipment — Part 7-1: Detail specification for 8-way, unshielded, free and fixed connectors, specifies these connectors to have a current-carrying capacity per contact of 1.0 amperes maximum at 60°C (149°F). See IEC 60603-7 for more information on current-carrying capacity at higher and lower temperatures.

Informational Note No. 3: The requirements of Table 722.140(B)(4) were derived for carrying power and data over 4-pair copper balanced twisted pair cabling. ANSI/TIA 568-C.2-2009, Commercial Building Telecommunications Cabling Standard — Part 2: Balanced Twisted-Pair Telecommunications Cabling and Components, describes this type of cabling.

Informational Note No. 4: See TIA-TSB-184-A-2017, Guidelines for Supporting Power Delivery Over Balanced Twisted-Pair Cabling, for information on installation and management of balanced twisted pair cabling supporting power delivery.

Informational Note No. 5: See ANSI/NEMA C137.3-2017, American National Standard for Lighting Systems — Minimum Requirements for Installation of Energy Efficient Power over Ethernet (PoE) Lighting Systems, for information on installation of cables for PoE lighting systems.

Informational Note No. 6: Rated current for power sources covered in 722.130 is the output current per conductor the power source is designed to deliver to an operational load at normal operating conditions, as declared by the manufacturer. In the design of these systems, the actual current in a given conductor might vary from the rated current per conductor by as much as 20 percent. An increase in current in one conductor is offset by a corresponding decrease in current in one or more conductors of the same cable.

(3) Use of 4-Pair Class 2 or Class 3 Cables to Transmit Power and Data.

Where Type CL3P, Type CL2P, Type CL3R, Type CL2R, Type CL3, or Type CL2 4-pair cables transmit power and data, the rated current per conductor of the power source shall not exceed the ampacities in Table 722.140(B) at an ambient temperature of 30°C (86°F). For ambient temperatures above 30°C (86°F), the correction factors in Table 310.15(B)(1)(1) or in Equation 310.15(B) shall apply.

Exception: Compliance with Table 722.140(B) shall not be required for installations where conductors are 24 AWG or larger and the rated current per conductor of the power source does not exceed 0.3 amperes.

Informational Note: One example of the use of Class 2 cables is a network of closed-circuit TV cameras using 24 AWG, 60°C (140°F) rated, Type CL2R, Category 5e balanced twisted-pair cabling.

(4) Use of Class 2-LP or Class 3-LP Cables to Transmit Power and Data.

Type CL3P-LP, Type CL2P-LP, Type CL3R-LP, Type CL2R-LP, Type CL3-LP, or Type CL2-LP cables shall be permitted to supply power to equipment from a power source with a rated current per conductor up to the marked current limit located immediately following the suffix "-LP" and shall be permitted to transmit data to the equipment. Where the number of bundled LP cables is 192 or less and the selected ampacity of the cables in accordance with Table 722.140(B)(4) exceeds the marked current limit of the cable, the ampacity determined from the table shall be permitted to be used. For ambient temperatures above 30°C (86°F), the correction factors of Table 310.15(B)(1)(1) or Equation 310.15(B) shall apply. The Class 2-LP and Class 3-LP cables shall comply with the following, as applicable:

(1) Cables with the suffix "-LP" shall be permitted to be installed in bundles, raceways, cable trays, communications raceways, and cable routing assemblies.

(2) Cables with the suffix "-LP" and a marked current limit shall follow the substitution hierarchy of 722.122 for the cable type without the suffix "-LP" and without the marked current limit.

(3) System design shall be permitted by qualified persons under engineering supervision.

Informational Note: An example of the marking on a 23 AWG, 4-pair, Class 2 cable rated 75°C (167°F) with an LP current rating of 0.6 amperes per conductor is "CL2-LP(0.6A) 75°C 23 AWG 4-pair". See 722.100(A)(9).

Table 722.140(B)(4) Ampacities of Each Conductor in Amperes in 4-Pair Class 2 or Class 3 Balanced Twisted-Pair Cables Based on Copper Conductors at an Ambient Temperature of 30°C (86°F) with All Conductors in All Cables Carrying Current, 60°C (140°F), 75°C (167°F), and 90°C (194°F) Rated Cables

| AWG | Number of 4-Pair Cables in a Bundle | | |

~~Installation of optical fiber cables shall comply with 722.161(A) through 722.161(H). Installation of raceways and cable routing assemblies shall comply with 722.110.~~

~~**(A)** Ducts Specifically Fabricated for Environmental Air.~~

~~Installations of optical fiber cables in ducts specifically fabricated for environmental air shall be in accordance with 722.161(A)(1) and 722.161(A)(2):~~

~~**(1)** Uses Permitted.~~

~~The following cables shall be permitted in ducts specifically fabricated for environmental air as described in 720.22(B) if they are directly associated with the air distribution system:~~

(1) ~~Up to 1.22 m (4 ft) of Types OFNP and OFCP~~

(2) ~~Types OFNP, OFCP, OFNR, OFCR, OFNG, OFCG, OFN, and OFC installed in raceways that are installed in compliance with 722.162~~

~~Informational Note: See NFPA 90A-2024, *Standard for the Installation of Air-Conditioning and Ventilating Systems*, for information on fire protection of wiring installed in fabricated ducts.~~

~~**(2)** Uses Not Permitted.~~

~~Types OFNR, OFCR, OFNG, OFCG, OFN, and OFC shall not be permitted to be installed in ducts specifically fabricated for environmental air as described in 720.22(B):~~

~~Informational Note: See NFPA 90A-2024, *Standard for the Installation of Air-Conditioning and Ventilating Systems*, for information on fire protection of wiring installed in fabricated ducts.~~

~~**(B)** Other Spaces Used for Environmental Air (Plenums).~~

~~Installations of optical fiber cables in other spaces used for environmental air shall be in accordance with 722.161(B)(1) and 722.161(B)(2):~~

~~**(1)** Uses Permitted.~~

~~The following cables shall be permitted in other spaces used for environmental air as described in 720.22(C):~~

(1) ~~Types OFNP and OFCP~~

(2) ~~Types OFNP and OFCP installed in plenum communications raceways~~

(3) ~~Types OFNP and OFCP installed in plenum cable routing assemblies~~

(4) ~~Types OFNP and OFCP supported by open metal cable tray systems~~

(5) ~~Types OFNP, OFCP, OFNR, OFCR, OFNG, OFCG, OFN, and OFC installed in raceways that are installed in compliance with 720.22(C)~~

(6) ~~Types OFNP, OFCP, OFNR, OFCR, OFNG, OFCG, OFN, and OFC supported by solid bottom metal cable trays with solid metal covers in other spaces used for environmental air (plenums), as described in 720.22(C)~~

(7) ~~Types OFNP, OFCP, OFNR, OFCR, OFNG, OFCG, OFN, and OFC installed in plenum riser and general-purpose communications raceways supported by solid bottom metal cable trays with solid metal covers in other spaces used for environmental air (plenums), as described in 720.22(C)~~

~~**(2)** Risers — Cables in Vertical Runs.~~

~~Types OFNR, OFCR, OFNG, OFCG, OFN, and OFC shall not be permitted to be installed in other spaces used for environmental air (plenums).~~

~~Informational Note: See NFPA 90A-2024, *Standard for the Installation of Air-Conditioning and Ventilating Systems*, for information on fire protection of wiring installed in other spaces used for environmental air.~~

~~**(C)** Risers — Cables in Vertical Runs.~~

~~Installations of optical fiber cables in other spaces used for environmental air shall be in accordance with 722.161(B)(1) and 722.161(B)(2):~~

~~**(1)** Uses Permitted.~~

~~The following cables shall be permitted in vertical runs penetrating one or more floors and in vertical runs in a shaft:~~

(1) ~~Types OFNP, OFCP, OFNR, and OFCR~~

(2) ~~Types OFNP, OFCP, OFNR, and OFCR installed in the following:~~

(3) ~~Plenum communications raceways~~

(4) ~~Plenum cable routing assemblies~~

(5) ~~Riser communications raceways~~

(6) ~~Riser cable routing assemblies~~

~~**(2)** Uses Not Permitted.~~

~~Types OFNG, OFCG, OFN, and OFC shall not be permitted to be installed in vertical runs.~~

~~Informational Note: See 770.26 for firestop requirements for floor penetrations.~~

~~**(D)** Risers — Cables Permitted in Metal Raceways.~~

~~The following cables and innerducts shall be permitted in metal raceways in a riser having firestops at each floor:~~

(1) ~~Types OFNP, OFCP, OFNR, OFCR, OFNG, OFCG, OFN, and OFC~~

(2) ~~Types OFNP, OFCP, OFNR, OFCR, OFNG, OFCG, OFN, and OFC installed in the following:~~

(3) ~~Plenum communications raceways (innerduct)~~

(4) ~~Riser communications raceways (innerduct)~~

(5) ~~General-purpose communications raceways (innerduct)~~

~~Informational Note: See 770.26 for firestop requirements for floor penetrations.~~

~~**(E)** Risers — Cables Permitted in Fireproof Shafts.~~

~~The following cables shall be permitted to be installed in fireproof riser shafts having firestops at each floor:~~

(1) ~~Types OFNP, OFCP, OFNR, OFCR, OFNG, OFCG, OFN, and OFC~~

(2) ~~Types OFNP, OFCP, OFNR, OFCR, OFNG, OFCG, OFN, and OFC installed in the following:~~

(3) ~~Plenum communications raceways~~

(4) ~~Plenum cable routing assemblies~~

(5) ~~Riser communications raceways~~

(6) ~~Riser cable routing assemblies~~

(7) ~~General-purpose communications raceways~~

(8) ~~General-purpose cable routing assemblies~~

~~Informational Note: See 770.26 for firestop requirements for floor penetrations.~~

~~**(F)** Risers — Cables Permitted in One- and Two-Family Dwellings.~~

~~The following cables shall be permitted in one- and two-family dwellings:~~

(1) ~~Types OFNP, OFCP, OFNR, OFCR, OFNG, OFCG, OFN, and OFC~~

(2) ~~Types OFNP, OFCP, OFNR, OFCR, OFNG, OFCG, OFN, and OFC installed in the following:~~

(3) ~~Plenum communications raceways~~

(4) ~~Plenum cable routing assemblies~~

(5) ~~Riser communications raceways~~

(6) ~~Riser cable routing assemblies~~

(7) ~~General-purpose communications raceways~~

(8) ~~General-purpose cable routing assemblies~~

~~**(G)** Cable Trays — Cables Permitted.~~

~~The following cables shall be permitted to be supported by cable trays:~~

(1) ~~Types OFNP, OFCP, OFNR, OFCR, OFNG, OFCG, OFN, and OFC~~

(2) ~~Types OFNP, OFCP, OFNR, OFCR, OFNG, OFCG, OFN, and OFC installed in the following:~~

(3) ~~Plenum communications raceways~~

(4) ~~Riser communications raceways~~

(5) ~~General-purpose communications raceways~~

~~**(H)** Distributing Frames and Cross-Connect Arrays — Cables Permitted.~~

~~The following cables shall be permitted to be installed in distributing frames and cross-connect arrays:~~

(1) ~~Types OFNP, OFCP, OFNR, OFCR, OFNG, OFCG, OFN, and OFC~~

(2) ~~Types OFNP, OFCP, OFNR, OFCR, OFNG, OFCG, OFN, and OFC installed in the following:~~

(3) ~~Plenum communications raceways~~

(4) ~~Plenum cable routing assemblies~~

(5) ~~Riser communications raceways~~

(6) ~~Riser cable routing assemblies~~

(7) ~~General-purpose communications raceways~~

(8) ~~General-purpose cable routing assemblies~~

~~**(I)** Other Building Locations — Cables Permitted.~~

~~The following cables shall be permitted to be installed in building locations other than the locations covered in 722.161(A) through 722.161(G):~~

(1) ~~Types OFNP, OFCP, OFNR, OFCR, OFNG, OFCG, OFN, and OFC~~

(2) ~~Types OFNP, OFCP, OFNR, OFCR, OFNG, OFCG, OFN, and OFC installed in the following:~~

(3) ~~Plenum communications raceways~~

(4) ~~Plenum cable routing assemblies~~

(5) ~~Riser communications raceways~~

(6) ~~Riser cable routing assemblies~~

(7) ~~General-purpose communications raceways~~

(8) ~~General-purpose cable routing assemblies~~

(9) ~~Types OFNP, OFCP, OFNR, OFCR, OFNG, OFCG, OFN, and OFC installed in a raceway of a type recognized in Chapter 3~~

~~**722.162** Installation of Optical Fiber Cables in Raceways, Cable Routing Assemblies, and Cable Trays.~~

~~**(A)** Types of Raceways.~~

~~Optical fiber cables shall be permitted to be installed in any raceway that complies with either 722.162(A)(1) or 722.162(A)(2):~~

~~**(1)** Communications Raceways.~~

~~Optical fiber cables shall be permitted to be installed in listed communications raceways selected in accordance with Table 722.110(A):~~

~~**(2)** Other Recognized Raceways.~~

~~Optical fiber cables shall be permitted to be installed in raceways recognized by and installed in accordance with Chapter 3.~~

~~**(B)** Raceway Fill for Optical Fiber Cables.~~

~~Raceway fill for optical fiber cables shall comply with either 722.162(B)(1) or 722.162(B)(2):~~

~~**(1)** Without Electric Light or Power Conductors.~~

~~Where optical fiber cables are installed in a raceway without electric light or power conductors, the raceway fill requirements of Chapters 3 and 9 shall not apply.~~

~~**(2)** Nonconductive Optical Fiber Cables with Electric Light or Power Conductors.~~

~~Where nonconductive optical fiber cables are installed with electric light or power conductors in a raceway, the raceway fill requirements of Chapters 3 and 9 shall apply.~~

~~**(C)** Cable Routing Assemblies.~~

~~Optical fiber cables shall be permitted to be installed in listed cable routing assemblies selected in accordance with Table 722.110(B):~~

~~**(D)** Cable Trays.~~

~~Optical fiber cables shall be permitted to be installed in metal or listed nonmetallic cable tray systems.~~

~~**722.163** Installation of Optical Fiber Cable in Innerduct.~~

~~Listed plenum communications raceways, listed riser communications raceways, and listed general-purpose communications raceways selected in accordance with Table 722.110(A) shall be permitted to be installed as innerduct in any type of listed raceway permitted in Chapter 3.~~

~~**722.164** Installation of Optical Fibers and Electrical Conductors.~~

~~**(A)** In Cable Trays and Raceways.~~

~~Conductive optical fiber cables contained in an armored or metal-clad-type sheath and nonconductive optical fiber cables shall be permitted to occupy the same cable tray or raceway with conductors for electric light, power, Class 1, non-power-limited fire alarm, Type ITC, or medium-power network-powered broadband communications circuits operating at 1000 volts or less. Conductive optical fiber cables without an armored or metal-clad-type sheath shall not be permitted to occupy the same cable tray or raceway with conductors for electric light, power, Class 1, non-power-limited fire alarm, Type ITC, or medium-power network-powered broadband communications circuits, unless all of the conductors of electric light, power, Class 1, non-power-limited fire alarm, and medium-power network-powered broadband communications circuits are separated from all of the optical fiber cables by a permanent barrier or listed divider.~~

~~**(B)** In Cabinets, Outlet Boxes, and Similar Enclosures.~~

~~Nonconductive optical fiber cables shall not be permitted to occupy the same cabinet, outlet box, panel, or similar enclosure housing the electrical terminations of an electric light, power, Class 1, non-power-limited fire alarm, or medium-power network-powered broadband communications circuit unless one or more of the following conditions exist:~~

(1) ~~The nonconductive optical fiber cables are functionally associated with the electric light, power, Class 1, non-power-limited fire alarm, or medium-power network-powered broadband communications circuit.~~

(2) ~~The conductors for electric light, power, Class 1, non-power-limited fire alarm, Type ITC, or medium-power network-powered broadband communications circuits operate at 1000 volts or less.~~

(3) ~~The nonconductive optical fiber cables and the electrical terminations of electric light, power, Class 1, non-power-limited fire alarm, or medium-power network-powered broadband communications circuit are installed in factory- or field-assembled control centers.~~

(4) ~~The nonconductive optical fiber cables are installed in an industrial establishment where conditions of maintenance and supervision ensure that only qualified persons service the installation.~~

~~When optical fibers are within the same hybrid cable for electric light, power, Class 1, non-power-limited fire alarm, or medium-power network-powered broadband communications circuits operating at 1000 volts or less, they shall be permitted to be installed only where the functions of the optical fibers and the electrical conductors are associated.~~

~~Optical fibers in hybrid optical fiber cables containing only current-carrying conductors for electric light, power, or Class 1 circuits rated 1000 volts or less shall be permitted to occupy the same cabinet, cable tray, outlet box, panel, raceway, or other termination enclosure with conductors for electric light, power, or Class 1 circuits operating at 1000 volts or less.~~

~~Optical fibers in hybrid optical fiber cables containing current-carrying conductors for electric light, power, or Class 1 circuits rated over 1000 volts shall be permitted to occupy the same cabinet, cable tray, outlet box, panel, raceway, or other termination enclosure with conductors for electric light, power, or Class 1 circuits in industrial establishments, where conditions of maintenance and supervision ensure that only qualified persons service the installation.~~

(C) With Other Circuits.

Conductive and nonconductive optical fiber cables shall be permitted in the same raceway, cable tray, box, enclosure, or cable routing assembly, with conductors of any of the following:

(1) Class 2 and Class 3 remote-control, signaling, and power-limited circuits in compliance with 645.6(E)(2) or Article 725, Parts I and II

(2) Power-limited fire alarm systems in compliance with Article 760, Parts I and III

(3) Communications circuits in compliance with Article 805, Parts I and V

(4) Community antenna television and radio distribution systems in compliance with Article 820, Parts I and V

(5) Low-power network-powered broadband communications circuits in compliance with Article 830, Parts I and V

(D) Support of Optical Fiber Cables.

Raceways shall be used for their intended purpose. Optical fiber cables shall not be strapped, taped, or attached by any means to the exterior of any conduit or raceway as a means of support.

Exception: Overhead (aerial) spans of optical fiber cables shall be permitted to be attached to the exterior of a raceway-type mast intended for the attachment and support of such cables.

722.165 Permitted Substitutions of Listed Optical Fiber Cables.

The substitutions for optical fiber cables in Table 722.165 and illustrated in Figure 722.165 shall be permitted.

Table 722.165 Permitted Substitutions of Listed Optical Fiber Cable

Cable Type	Permitted Substitutions
OFNP	None
OFCP	OFNP
OFNR	OFNP
OFCR	OFNP, OFCP, OFNR
OFNG, OFN	OFNP, OFNR
OFCG, OFC	OFNP, OFCP, OFNR, OFCR, OFNG, OFN

Figure 722.165 Cable Substitution Hierarchy.

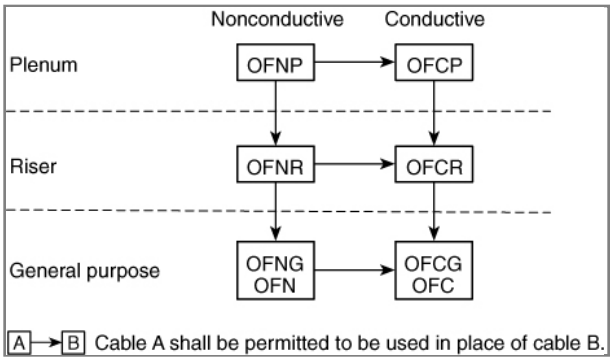

722.166 Overhead (Aerial) Optical Fiber Cables.

Overhead optical fiber cables containing a non-current-carrying metallic member entering buildings shall comply with 722.166(A) and 722.166(B) :

(A) On Poles and In-Span.

Where outside plant optical fiber cables and electric light or power conductors are supported by the same pole or are run parallel to each other in-span, the conditions described in 722.166(A)(1) through 722.166(A)(4) shall be met.

(1) Relative Location.

Where practicable, the outside plant optical fiber cables shall be located below the electric light or power conductors.

(2) Attachment to Cross-Arms.

Attachment of outside plant optical fiber cables to a cross-arm that carries electric light or power conductors shall not be permitted.

(3) Climbing Space.

The climbing space through outside plant optical fiber cables shall comply with the requirements of 225.14(B) :

(4) Clearance.

Supply service drops and sets of overhead service conductors of 0 volts to 750 volts running above and parallel to optical fiber cable service drops shall have a minimum separation of 300 mm (12 in.) at any point in the span, including the point of their attachment to the building. Clearance of not less than 1.0 m (40 in.) shall be maintained between the two services at the pole.

(B) Above Roofs.

Outside plant optical fiber cables shall have a vertical clearance of not less than 2.5 m (8 ft) from all points of roofs above which they pass.

Exception No. 1: The requirement of 770.44(B) shall not apply to auxiliary buildings such as garages and the like.

Exception No. 2: A reduction in clearance above only the overhanging portion of the roof to not less than 450 mm (18 in.) shall be permitted if the following applies:

(1) Not more than 1.2 m (4 ft) of optical fiber cable service drop cable passes above the roof overhang.

(2) The cable is terminated at a through- or above-the-roof raceway or approved support.

Exception No. 3: Where the roof has a slope of not less than 100 mm in 300 mm (4 in. in 12 in.), a reduction in clearance to not less than 900 mm (3 ft) shall be permitted.

Informational Note: See ANSI/IEEE C2-2017, *National Electric Safety Code, Part 2, Safety Rules for Overhead Lines* , for additional information regarding overhead wires and cables.

722.167 Underground Optical Fiber Cables Entering Buildings.

Underground optical fiber cables entering buildings shall comply with 722.167(A) and 722.167(B) :

(A) Underground Systems with Electric Light, Power, Class 1, or Non-Power-Limited Fire Alarm Circuit Conductors.

Underground conductive optical fiber cables entering buildings with electric light, power, Class 1, or non-power-limited fire alarm circuit conductors in a raceway, handhole enclosure, or manhole shall be located in a section separated from such conductors by means of brick, concrete, or tile partitions or by means of a suitable barrier.

(B) Direct-Buried Cables and Raceways.

Direct-buried conductive optical fiber cables shall be separated by at least 300 mm (12 in.) from conductors of any electric light, power, non-power-limited fire alarm circuit conductors, or Class 1 circuit.

Exception No. 1: *Separation shall not be required where the electric service conductors are installed in raceways or have metal cable armor.*

Exception No. 2: *Separation shall not be required where electric light or power branch-circuit or feeder conductors, non-power-limited fire alarm circuit conductors, or Class 1 circuit conductors are installed in a raceway or in metal-sheathed, metal-clad, or Type UF, or Type USE cables.*

722.168 Unlisted Optical Fiber Cables Entering Buildings.

(A) Conductive and Nonconductive Cables.

Unlisted conductive and nonconductive outside plant optical fiber cables shall be permitted to be installed in building spaces, other than risers, ducts used for environmental air, plenums used for environmental air, and other spaces used for environmental air, where the length of the cable within the building, measured from its point of entrance, does not exceed 15 m (50 ft) and the cable enters the building from the outside and is terminated in an enclosure. The point of entrance shall be permitted to be extended from the penetration of the external wall, roof, or floor slab by continuously enclosing the entrance optical fiber cables in rigid metal conduit (RMC) or intermediate metal conduit (IMC) to the point of emergence.

Informational Note: Splice cases or terminal boxes, both metallic and plastic types, typically are used as enclosures for splicing or terminating optical fiber cables.

(B) Nonconductive Cables in Raceway.

Unlisted nonconductive outside plant optical fiber cables shall be permitted to enter the building from the outside and shall be permitted to be installed in any of the following raceways:

(1) Intermediate metal conduit (IMC)

(2) Rigid metal conduit (RMC)

(3) Rigid polyvinyl chloride conduit (PVC)

(4) Electrical metallic tubing (EMT)

Unlisted nonconductive outside plant cables installed in rigid polyvinyl chloride conduit (PVC) or electrical metallic tubing (EMT) shall not be installed in risers, ducts used for environmental air, plenums used for environmental air, and other spaces used for environmental air.

722.170 Applications of Listed PLFA Cables.

PLFA cables shall comply with the requirements described in Table 722.170 or where cable substitutions are made as shown in 722.172 . Where substitute cables are installed, the wiring requirements of Article 760, Parts I and III shall apply. Types FPLP-CI, FPLR-CI, and FPL-CI cables shall be permitted to be installed to provide 2-hour circuit integrity rated cables.

Table 722.170 Applications of Listed PLFA Cables in Buildings

Cable Type Applications	FPLP and FPLP-CI	FPLR and FPLR-CI	FPL and FPL-CI
In fabricated ducts as described in 720.22(B)	N	N	N
In fabricated ducts	Y	N	N
In metal raceway that complies with 720.22(B)	Y	Y	Y
In other spaces used for environmental air as described in 720.22I	Y	Y	Y
In other spaces used for environmental air	Y	N	N
In metal raceway that complies with 720.22I	Y	Y	Y
In plenum communications raceways	Y	N	N
In plenum cable routing assemblies	Y	N	N
Supported by open metal cable trays	Y	N	N
Supported by solid bottom metal cable trays with solid metal covers	Y	Y	Y
In risers			
In vertical runs	Y	Y	N
In metal raceways	Y	Y	Y
In fireproof shafts	Y	Y	Y
In plenum communications raceways	Y	Y	N
In plenum cable routing assemblies	Y	Y	N
In riser communications raceways	Y	Y	N
In riser cable routing assemblies	Y	Y	N
In one- and two-family dwellings	Y	Y	Y
Within buildings in other than air-handling spaces and risers			
General	Y	Y	Y
Supported by cable trays	Y	Y	Y
In any raceway recognized in Chapter 3	Y	Y	Y
In plenum communications raceway	Y	Y	Y
In plenum cable routing assemblies	Y	Y	Y
In riser communications raceways	Y	Y	Y
In riser cable routing assemblies	Y	Y	Y
In general-purpose communications raceways	Y	Y	Y
In general-purpose cable routing assemblies	Y	Y	Y

Note:

"N" indicates that the cable type shall not be permitted to be installed in the application. "Y" indicates that the cable type shall be permitted to be installed in the application subject to the limitations described in 760.133 through 760.145.

722.171 Wiring Methods and Materials on Load Side of the PLFA Power Source.

Fire alarm circuits on the load side of the power source shall be permitted to be installed using wiring methods and materials in accordance with 722.171(A) , 722.171(B) , or a combination of both. Article 722, Parts I and II shall apply.

(A) PLFA Wiring Methods and Materials.

Power-limited fire alarm conductors and cables described in 722.170 shall be installed as detailed in 722.171(B)(1) through 722.171(B)(4), and 722.172 :

(1) In Raceways, Exposed on Ceilings or Sidewalls, or Fished in Concealed Spaces.

Cable splices or terminations shall be made in listed fittings, boxes, enclosures, fire alarm devices, or utilization equipment. Where installed exposed, cables shall be adequately supported and installed such that maximum protection against physical damage is afforded by building construction such as baseboards, door frames, ledges, and so forth. Where located within 2.1 m (7 ft) of the floor, cables shall be securely fastened in an approved manner at intervals of not more than 450 mm (18 in.).

(2) Passing Through a Floor or Wall.

Cables shall be installed in metal raceways or rigid nonmetallic conduit where passing through a floor or wall to a height of 2.1 m (7 ft) above the floor, unless adequate protection can be afforded by building construction such as detailed in 722.171(A)(1) or unless an equivalent solid guard is provided.

(3) Nonconcealed Spaces.

Cables covered by Chapter 3 used for wiring of PLFA circuits and installed in nonconcealed spaces shall comply with the following:

(1) The cables shall be installed in accordance with 722.100(A)(15)(a) and 722.100(A)(15)(b) :

(2) Exposed portions of the cable shall have a length not exceeding 3 m (10 ft).

(4) Portable Fire Alarm Systems.

A portable fire alarm system provided to protect a stage or set when not in use shall be permitted to use wiring methods in accordance with 530.12 :

(5) PLFA Wired Using NPLFA Wiring Methods and Materials.

NPLFA wiring methods shall be permitted when used in accordance with 760.46 , 760.49 , or 760.53 for PLFA circuits. Conductors shall be solid or stranded copper. Separation from electric light, power, Class 1, non-power-limited fire alarm circuit conductors, and medium-power network-powered broadband communications cables shall comply with 760.136 :

(B) Power-Limited Fire Alarm Conductor Size.

Conductors of 26 AWG shall be permitted only where spliced with a connector listed as suitable for 26 AWG to 24 AWG or larger conductors that are terminated on equipment or where the 26 AWG conductors are terminated on equipment listed as suitable for 26 AWG conductors. Single conductors shall not be smaller than 18 AWG.

~~(C) Support of Conductors.~~

~~Power-limited fire alarm circuit conductors shall not be strapped, taped, or attached by any means to the exterior of any conduit or other raceway as a means of support.~~

~~722.172 Permitted Substitutions for Power-Limited Fire Alarm Cables.~~

~~The substitutions for fire alarm cables listed in Table 722.172 and illustrated in Figure 722.172 shall be permitted. Where substitute cables are installed, the wiring requirements of Article 760, Parts I and III shall apply.~~

~~Informational Note: See 722.100 for information on communications cables (CMP, CMR, CMG, CM).~~

~~Table 722.172 Permitted Substitutions for Power-Limited Fire Alarm Cables.~~

~~Cable Type~~	~~Permitted Substitutions~~
~~FPLP~~	~~CMP~~
~~FPLR~~	~~CMP, FPLP, CMR~~
~~FPL~~	~~CMP, FPLP, CMR, FPLR, CMG, CM~~

~~**Figure 722.172 Power-Limited Fire Alarm Cable Substitution Hierarchy.**~~

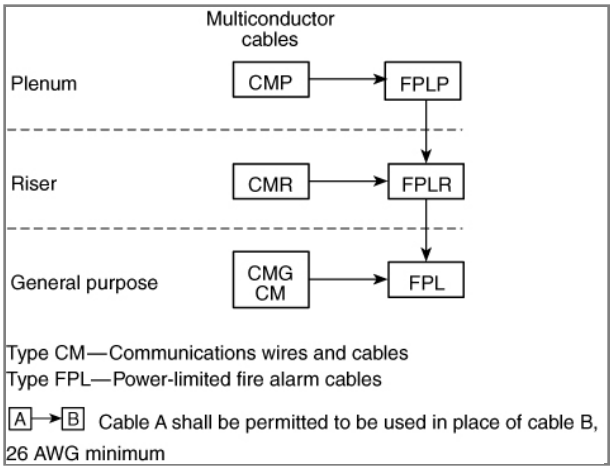

~~722.180 Circuit Integrity (CI) Cable, Fire-Resistive Cable System, or Electrical Circuit Protective System.~~

~~(A) General.~~

~~CI cable, a fire-resistive cable system, or a listed electrical circuit protective system shall be permitted for use in systems that supply critical circuits to ensure survivability for continued circuit operation for a specified time under fire conditions.~~

~~(B) Securing and Supporting.~~

~~Circuit integrity type CI cable shall be supported at 610 mm (24 in.) maximum intervals in accordance with the following:~~

(1) ~~Secured to the noncombustible surface of the building structure~~

(2) ~~Using steel supports and fasteners~~

~~722.181 Thermocouple Circuits.~~

~~Conductors in Type PLTC cables used for Class 2 thermocouple circuits shall be permitted to be any of the materials used for thermocouple extension wire.~~

~~722.182 Installation of Circuit Conductors Extending Beyond One Building.~~

~~Circuit conductors that extend beyond one building and are run such that they are subject to accidental contact with electric light or power conductors operating over 300 volts to ground, or are exposed to lightning on interbuilding circuits on the same premises, shall comply with the following:~~

(1) ~~For other than coaxial conductors, 750.48, 750.100, 800.44, 800.50, 800.53, 805.170(A), and 805.170(B)~~

(2) ~~For coaxial conductors, 750.48(B), 750.75, and 800.44~~

~~**REPLACE THE TEXT FOR ARTICLE 722 WITH THE TEXT IN THE ATTACHMENT**~~

Additional Proposed Changes

File Name	Description	Approved
revised_Article_722_8-26-2024.docx	Revised text for Article 722 in MS Word revisions mode	
revised_Article_722_8-26-2024.pdf	Revised text for Article 722 in PDF format	

Statement of Problem and Substantiation for Public Comment

While the term “limited-energy cable” is new, the concept is not. Look in Chapters 7 & 8 of the 2023 NEC at the separation rules for power-limited cables, communications cables, optical fiber cables and fault-managed power cables. A group of low hazard cables are permitted to be run in the same pathway (raceway, cable tray, etc.). These same low hazard cables are required to be separated from higher hazard circuits, including Class 1 circuits, non-power-limited fire alarm circuits, network-powered broadband communications medium-power circuits, and electric power and light circuits.

The low hazard cables are limited-energy cables in the First Revision, with Article 722 covering their installation.

This PC recommends multiple revisions to the First Draft of Article 722. The First draft of Article 722 is very large; the text recommended in this PC is half as long.

Since the scope of Article 722 is limited-energy cables and their installation, the PC recommends deleting (relocating out of the Article) everything outside of the scope, including installation and listing of cable routing assemblies and communications raceways (to new Article 723), network-powered broadband communications medium-power cables (return to Article 830), Class 1 cables, communications wires and power outlets for communications equipment.

The recommended text for the revised Article 722 has all the listing requirements moved to 722.2 in order to comply with the NEC Style Manual. Which cables are limited-energy can be determined unequivocally by referring to Table 722.2(B), Limited Energy Cable Types and Marking. Likewise, the applications of limited-

energy cables in buildings are covered in Table 722.120 Applications of Limited-Energy Cables in Buildings. The first draft had multiple applications tables that have either been removed or condensed onto Table 722.120. Likewise, the recommended text for the installation rules is condensed.

In several places in Article 722 long lists of cables that are permitted to be run in the same pathway are replaced by simple statements that all limited-energy cables are permitted in the same pathway.

Some of the text in the First Draft was redundant, repeating or referring to Article 720 General Requirements of Limited-Energy Wiring Methods and Materials. The recommended text in this PC deletes redundant text.

The overarching purpose of this PC is to increase the usability of Article 722.

Related Public Comments for This Document

Related Comment	Relationship
Public Comment No. 127-NFPA 70-2024 [New Section after 722.1]	
Public Comment No. 160-NFPA 70-2024 [Sections Part II., 722.100, 722.102]	
Public Comment No. 192-NFPA 70-2024 [Section No. 722.4]	
Public Comment No. 197-NFPA 70-2024 [Section No. 722.12]	
Public Comment No. 222-NFPA 70-2024 [Section No. 722.14]	
Public Comment No. 226-NFPA 70-2024 [Section No. 722.30(B)]	
Public Comment No. 235-NFPA 70-2024 [Article 722]	
Public Comment No. 236-NFPA 70-2024 [Section No. 722.110(A)]	
Public Comment No. 237-NFPA 70-2024 [Section No. 722.110(B)]	
Public Comment No. 245-NFPA 70-2024 [Section No. 722.120]	
Public Comment No. 246-NFPA 70-2024 [Section No. 722.130]	
Public Comment No. 248-NFPA 70-2024 [Section No. 722.170]	
Public Comment No. 257-NFPA 70-2024 [Section No. 722.112 [Excluding any Sub-Sections]]	
Public Comment No. 258-NFPA 70-2024 [Section No. 722.112(H)]	
Public Comment No. 259-NFPA 70-2024 [Section No. 722.122]	
Public Comment No. 260-NFPA 70-2024 [Section No. 722.122]	
Public Comment No. 279-NFPA 70-2024 [Section No. 722.131]	
Public Comment No. 280-NFPA 70-2024 [Section No. 722.133(E)]	
Public Comment No. 281-NFPA 70-2024 [Section No. 722.133(D)]	
Public Comment No. 282-NFPA 70-2024 [Section No. 722.134]	
Public Comment No. 283-NFPA 70-2024 [Section No. 722.136]	
Public Comment No. 284-NFPA 70-2024 [Section No. 722.140(B)(1)]	
Public Comment No. 285-NFPA 70-2024 [Section No. 722.140(B)(4)]	
Public Comment No. 286-NFPA 70-2024 [Section No. 722.161]	
Public Comment No. 287-NFPA 70-2024 [Section No. 722.168]	

Related Item

- Global FCR-238

Submitter Information Verification

Submitter Full Name: David Kiddoo
Organization: CCCA
Affiliation: Communications Cable & Connectivity Association
Street Address:
City:
State:
Zip:

Submittal Date: Sat Aug 24 04:48:10 EDT 2024
Committee: NEC-P03

Article 722 Limited-Energy Cables

Part I. General

722.1 Scope. This article covers the general requirements for the installation of limited-energy cables.

722.2 Listing of Limited-Energy Cables. Limited-energy cables installed in buildings shall be listed in accordance with 722.2(A)(1) through 722.2(A)(19) and marked in accordance with 722.2(B).

Exception: Outside plant communications cables, outside plant CATV-type coaxial cables, and outside plant conductive and nonconductive optical fiber cables, installed in compliance with 800.48 shall not be required to be listed.

(A) Listing of Cables. Limited-energy cables installed as wiring methods within buildings shall be listed as resistant to the spread of fire and other criteria in accordance with 722.2(A)(1) through 722.2(A)(16).

Informational Note No. 1: See UL 13-2015, *Power-Limited Circuit Cables*, for applicable requirements for listing of Class 2 and Class 3 cable and power-limited tray cable (PLTC).

Informational Note No. 2: See UL 1424-2015, *Cables for Power-Limited Fire-Alarm Circuits*, for applicable requirements for listing of power-limited fire alarm cable.

Informational Note No. 3: See UL 1651-2015, *Optical Fiber Cable*, for applicable requirements for listing of optical fiber cable.

Informational Note No. 4: See UL 1400-2, *Outline for Fault-Managed Power Systems — Part 2: Requirements for Class 4 Cables*, for applicable requirements for listing of Class 4 cable.

Informational Note No. 5: See UL 444-2017, *Communications Cables*, for applicable requirements for listing of communications cables.

Informational Note No. 6: See UL1655-2009, *Community-Antenna Television Cables*, for applicable requirements for listing of community-antenna television cables.

(1) Plenum Cables. Limited-energy plenum cables identified in Table 722.22(A) shall be listed as suitable for use in ducts, plenums, and other space for environmental air and shall be listed as having adequate fire-resistant and low-smoke producing characteristics.

Informational Note: See NFPA 262-2023, *Standard Method of Test for Flame Travel and Smoke of Wires and Cables for Use in Air-Handling Spaces*, for the test method used to determine that a cable is low-smoke producing and fire resistant, exhibiting a maximum peak optical density of 0.50 or less, an average optical density of 0.15 or less, and a maximum flame spread distance of 1.52 m (5 ft) or less.

(2) Riser Cables. Limited-energy riser cables identified in Table 722.22(A) shall be listed as suitable for use in a vertical run in a shaft or from floor to floor and shall be listed as having fire-resistant characteristics capable of preventing the carrying of fire from floor to floor.

Informational Note: See UL 1666-2007, *Test for Flame Propagation Height of Electrical and Optical-Fiber Cable Installed Vertically in Shafts*, for the cable requirements defining fire-resistant characteristics capable of preventing the carrying of fire from floor to floor.

(3) General-Purpose Cables. Limited-energy general-purpose cables identified in Table 722.22(A) shall be listed as resistant to the spread of fire and as suitable for general-purpose use, except for use in risers, ducts, plenums, and other space used for environmental air.

Informational Note: See UL 2556-2021, *Wire and Cable Test Methods*, for defining *resistant to the spread of fire*. One method is to demonstrate that the cables do not spread fire to the top of the tray in the UL Flame Exposure, Vertical Tray Flame Test. The smoke measurements in the test method are not applicable. A method of defining *resistant to the spread of fire* is for the damage (char length) not to exceed 1.5 m (4 ft 11 in.) when performing the FT4 Vertical Flame Test.

(4) Alternative General-Purpose Cables. Limited-energy alternative general-purpose cables identified in Table 722.22(A) shall be listed as suitable for general-purpose use, with the exception of risers and plenums, and shall also be resistant to the spread of fire.

Informational Note: See CSA C22.2 No. 0.3-M-2001, *Test Methods for Electrical Wires and Cables*, for the CSA Vertical Flame Test — cables in cable trays, that can also be used to define *resistant to the spread of fire* when the damage (char length) does not exceed 1.5 m (4 ft 11 in.).

(5) Limited-Use Cables. Limited-energy limited-use cables identified in Table 722.22(A) shall be listed as suitable for use in dwellings and raceways and shall be listed as resistant to flame spread.

Informational Note: See UL 2556-2021, *Wire and Cable Test Methods*, for one method of determining that cable is resistant to flame spread by testing the cable to the FV-2/VW-1 test.

(6) Network-Powered Broadband Communications Low-Power Cables. Network-powered broadband communications low-power cables shall be factory-assembled cables consisting of a jacketed coaxial cable, a jacketed combination of coaxial cable and multiple individual conductors, or a jacketed combination of an optical fiber cable and multiple individual conductors.

(7) Outdoor Cables.

(a) Type PLTC. Type PLTC nonmetallic-sheathed, power-limited tray cable shall be listed as being suitable for cable trays, resistant to the spread of fire, and sunlight- and moisture-resistant. Type PLTC cable used in a wet location shall be listed for use in wet locations and marked “wet” or “wet location.”

Informational Note: See UL 1685-2015, *Vertical-Tray Fire-Propagation and Smoke-Release Test for Electrical and Optical-Fiber Cables*, for the UL Flame Exposure, Vertical Tray Flame Test that is used to determine resistance to the spread of fire when cables do not spread fire to the top of the tray. The smoke measurements in the test method are not applicable. See CSA C22.2 No. 0.3-M-2001, *Test Methods for Electrical Wires and Cables*, for the CSA Vertical Flame Test — cables in cable trays that can also be used to define *resistant to the spread of fire* when the damage (char length) does not exceed 1.5 m (4 ft 11 in.).

(b) Class 4 outdoor-only use cables. Class 4 outdoor-only cables shall be listed as suitable for use outdoors.

(c) Network-Powered Broadband Communications Low-Power Outdoor Cables. Network-powered broadband communications low-power cables intended for outdoor use shall be listed as being suitable for the application.

(d) Network-Powered Broadband Communications Low-Power Underground Cables. Network-powered broadband communications low-power underground cables shall be jacketed and listed as being suitable for outdoor underground use.

(8) Under-Carpet Cables. Undercarpet communications wire and cable shall be listed as suitable for use under carpet, floor covering, modular tiles, and planks.

Informational Note: See UL 444-2017, *Communications Cables*, for the compressive loading test used to determine the suitability of cable for under-carpet use.

(9) Circuit Integrity (CI) Cable, Fire-Resistive Cable System, or Electrical Circuit Protective System. Cables that are used for survivability of critical circuits under fire conditions shall comply with 722.21(A)(7)(a), 722.21(A)(7)(b), or 722.21(A)(7)(c).

Informational Note: See *NFPA 72*-2025, *National Fire Alarm and Signaling Code*, 12.4.3 and 12.4.4 for additional information on fire alarm CI cable, fire-resistive cable systems, or electrical circuit protective systems used for fire alarm circuits to comply with the survivability requirements to maintain the circuit’s electrical function during fire conditions for a defined period of time.

(a) *CI Cables.* CI cables of the types specified in 722.21(A)(1), 722.21(A)(2), 722.21(A)(3), 722.21(A)(4), and 722.21(A)(6) and used for survivability of critical circuits shall be marked with the additional classification using the suffix “CI.” To maintain its listed fire-resistive rating, CI cable shall only be installed in free air in accordance with 722.180(B). CI cables shall only be permitted to be installed in a raceway where specifically listed and marked as part of a fire-resistive cable system as covered in 722.21(A)(7)(b).

Informational Note: See UL 2196-2017, *Fire Test for Circuit Integrity of Fire-Resistive Power, Instrumentation, Control and Data Cables*, and UL 1425, *Cables for Non–Power-Limited Fire-Alarm Circuits*, for information on establishing a rating for CI cable. The *UL Guide Information for Nonpower-limited Fire Alarm Circuits (HNHT)* contains information to identify the cable and its installation limitations to maintain the fire-resistive rating.

(b) *Fire-Resistive Cables.* Fire-resistive cables of the types specified in 722.21(A)(1), 722.21(A)(2), 722.21(A)(3), 722.21(A)(4), 722.21(A)(6), and 722.21(A)(7)(a) that are part of a fire-resistive cable system shall be identified with the system identifier and hourly rating marked on the protectant or the smallest unit container and installed in accordance with the listing of the system.

Informational Note: See UL 2196-2017, *Fire Test for Circuit Integrity of Fire-Resistive Power, Instrumentation, Control and Data Cables*, for information on establishing a rating for a fire-resistive cable system. The *UL Guide Information for Electrical Circuit Integrity Systems (FHIT)* contains information to identify the system and its installation limitations to maintain a minimum fire-resistive rating.

(c) *Electrical Circuit Protective System.* Protectants for cables of the types specified in 722.21(A)(1), 722.100(A)(2), 722.21(A)(3), 722.21(A)(4), and 722.21(A)(6) that are part of an electrical circuit protective system shall be identified with the protective system identifier and hourly rating marked on the protectant or the smallest unit container and installed in accordance with the listing of the protective system.

Informational Note: See UL 1724-2006, *Fire Tests for Electrical Circuit Protective Systems*, for information on establishing a rating for an electrical circuit protective system. The *UL Guide Information for Electrical Circuit Integrity Systems (FHIT)* contains information to identify the system and its installation limitations to maintain the fire-resistive rating.

(10) Class 3 Single Conductors. Class 3 single conductors used as other wiring within buildings shall be listed Type CL3 and shall not be smaller than 18 AWG.

Informational Note: See UL 1685-2015, *Vertical-Tray Fire-Propagation and Smoke-Release Test for Electrical and Optical-Fiber Cables*, for the UL Flame Exposure, Vertical Tray Flame Test that is used to determine resistance to the spread of fire when cables do not spread fire to the top of the tray. The smoke measurements in the test method are not applicable. See CSA C22.2 No. 0.3-M-2001, *Test Methods for Electrical Wires and Cables*, for the CSA Vertical Flame Test — cables in cable trays that can also be used to define *resistant to the spread of fire* when the damage (char length) does not exceed 1.5 m (4 ft 11 in.).

(11) Limited Power (LP) Cables. Types CL2P-LP, CL2R-LP, CL2-LP, CL3P-LP, CL3R-LP, CL3-LP, CMP-LP, CMR-LP AND CM-LP cables shall be listed as suitable for carrying power and data up to a specified current limit for each conductor without exceeding the temperature rating of the cable. The cables shall be marked with the suffix "-LP (XXA)" where XXA designates the current limit in amperes per conductor.

Informational Note: An example of the marking on 23 AWG, 4-pair, Class 2 cable rated 75°C (167°F) with an LP current rating of 0.6 amperes per conductor is "CL2-LP (0.6A) 75°C 23 AWG 4-pair."

(12) Wet Locations. Class 2,3 & 4 cables and power-limited fire alarm cables used in a wet location shall be listed for use in wet locations and be marked "wet" or "wet location" or have a moisture-impervious metal sheath.

(13) Field-Assembled Optical Fiber Cables. Field-assembled optical fiber cable shall comply with 722.21(A)(12)(a) through 722.21(A)(12)(d).

(a) The specific combination of jacket and optical fibers intended to be installed as a field-assembled optical fiber cable shall be one of the types in 722.21(A)(1), 722.21(A)(2), or 722.21(A)(3) and shall be marked in accordance with Table 722.21(A).

(b) The jacket of a field-assembled optical fiber cable shall have a surface marking indicating the specific optical fibers with which it is identified for use.

(c) The optical fibers shall have a permanent marking, such as a marker tape, indicating the jacket with which they are identified for use.

(d) The jacket without fibers shall meet the listing requirements for communications raceways in 723.2 in accordance with the cable marking.

(14) Cables Containing Optical Fibers. Hybrid optical fiber cables shall be listed as electrical cables based on the type of electrical conductors.

(15) Temperature Ratings. Limited-energy cables shall have a temperature rating of not less than 60°C (140°F).

(16) Voltage Ratings.

(a) Class 2 cables shall have a voltage rating of not less than 150 volts.
(b) Class 3 cables shall have a voltage rating of not less than 300 volts.
(c) Power-limited fire alarm cables shall have a voltage rating of not less than 300 volts.
(d) *Insulation on conductors in Class 4 cables.* Insulation on conductors in Class 4 cables shall be rated not less than 450 volts dc.
(e) Class 4 cables shall have a voltage rating of not less than 450 volts dc.
(f) Communications cables shall have a voltage rating of not less than 300 volts.
(g) Network-powered communications cables shall have a voltage rating of not less than 300 volts.
(h) Voltage ratings shall not be marked on limited-energy cables.

> *Exception: Voltage markings shall be permitted where the cable has multiple listings and voltage marking is required for one or more of the listings.*

(17) Power-Limited Fire Alarm (PLFA) Cable Conductors. PFLA cables shall comply with 722.21(A)(15)(a) through 722.21(A)(15)(b).

(a) Conductors for cables, other than coaxial cables, shall be solid or stranded copper. Coaxial cables shall be permitted to use 30 percent conductivity copper-covered steel center conductor wire.

(b) The size of conductors in a multiconductor cable shall not be smaller than 26 AWG. Single conductors shall not be smaller than 18 AWG. Conductors of 26 AWG shall be permitted only where spliced with a connector listed as suitable for 26 AWG to 24 AWG or larger conductors that are terminated on equipment or where the 26 AWG conductors are terminated on equipment listed as suitable for 26 AWG conductors.

(18) Class 4 Cable Conductors. Conductors of sizes not smaller than 24 AWG shall be permitted to be used.

(19) Communications cable conductors. Conductors in communications cables, other than coaxial cables, shall be copper.

722.2(B) Marking of Listed Limited-Energy Cables. Limited-energy cables installed in buildings shall be marked in accordance with 722.2(B) and Table 722.2(B); they shall be permitted to be marked in accordance with 722.2(C). Cables shall be durably marked on the surface in accordance with the following:

(1) The AWG size or circular mil area shall be repeated at intervals not exceeding 610 mm (24 in.).

(2) All other markings shall be repeated at intervals not exceeding 1.0 m (40 in.).

(3) The proper type designation for the type of cable shall be marked in accordance with Table 722.2(B).

(4) The manufacturer's name, trademark, or other distinctive marking by which the organization responsible for the product can be readily identified shall be marked.

(5) The AWG size or circular mil area shall be marked.

Informational Note No. 1: See Chapter 9, Table 8 for conductor area expressed in SI units for conductor sizes specified in AWG or circular mil area.

(6) The temperature rating for a temperature rating exceeding 60°C (140°F) shall be marked.

Informational Note No. 2: A minimum temperature rating of 60°C (140°F) is assumed for cables not marked with a temperature rating.

(7) Voltage ratings shall not be marked on the cables.

Exception: Voltage markings shall be permitted where the cable has multiple listings, and a voltage marking is required for one or more of the listings.

Informational Note No. 3: Voltage markings on cables could be misinterpreted to suggest that the cables may be suitable for Class 1 electric light and power applications.

Informational Note No. 4: Cable types are listed in descending order of fire resistance rating.

Table 722.2(B) Limited Energy Cable Types and Marking

Cable Type	Cable Name	Cable Marking
Plenum Cables	Class 4 plenum cable	CL4P
	Class 3 plenum cable	CL3P
	Class 2 plenum cable	CL2P
	Communications plenum cable	CMP
	CATV community antenna television plenum cable	CATVP
	Network-powered broadband communications low-power cable	BLP
	Nonconductive optical fiber plenum cable	OFNP
	Conductive optical fiber plenum cable	OFCP
	Power-limited fire alarm plenum cable	FPLP
Riser Cables	Class 4 riser cable	CL4R
	Class 3 riser cable	CL3R
	Class 2 riser cable	CL2R
	Communications riser cable	CMR
	CATV community antenna television riser cable	CATVR
	Network-powered broadband communications low-power riser cable	BLR
	Nonconductive optical fiber riser cable	OFNR
	Conductive optical fiber riser cable	OFCR
	Power-limited fire alarm riser cable	FPLR
General-Purpose Cables	Class 4 general-purpose cable	CL4
	Class 3 general-purpose cable	CL3
	Class 2 general-purpose cable	CL2
	Communications general-purpose cable	CM
	CATV community antenna television general-purpose cable	CATV
	Network-powered broadband communications low-power general-purpose cable	BL
	Nonconductive optical fiber general-purpose cable	OFN
	Conductive optical fiber general-purpose cable	OFC
	Power-limited fire alarm general-purpose cable	FPL
Alternative General-Purpose Cables		
	Communications alternative general-purpose cable	CMG
	Nonconductive optical fiber alternative general-purpose cable	OFNG
	Conductive optical fiber alternative general-purpose cable	OFCG

Limited- Use Cables		
	Class 3 limited-use cable	CL3X
	Class 2 limited-use cable	CL2X
	Communications limited-use cable	CMX
	CATV community antenna television limited-use cable	CATVX
	Network-powered broadband communications low-power limited-use cable	BLX
Outdoor Cables	Power-limited tray cable	PLTC
	Class 4 outdoor-only use cable	CL4Z
	Network-powered broadband communications low-power underground cable	BLU
Undercarpet Cables	Undercarpet communications wire and cable	CMUC

Note: All types of electrical cables containing optical fibers are provided with the suffix "-OF."

722.112 Installation of Limited-Energy Cables With Other Circuits

(A) **General.** Unless prohibited by this section, plenum, riser, general-purpose, and limited-use limited-energy cables shall be permitted to be installed in the same raceway, cable tray, box, enclosure, or cable routing assembly. Installations shall comply with 722.112(B) through 722.112(H).

(B) Two or More Class 2, Class 3, or Class 4 Circuits. Conductors of two or more limited-energy circuits of the same class shall be permitted within the same limited-energy cable.

(C) (C) Class 2, Class 3, and Class 4 Circuits with the Same Limited-Energy Cable.

(1) Class 3 Cables. Class 2 circuits shall be permitted to use listed Class 3 cables.

(2) Dual-Listed Class 3/Class 4 Cables. Class 2 and Class 3 circuits shall be permitted to use dual-listed Class 3/Class 4 cables.

(D) Class 2 and Class 3 Circuits with Communications Circuits.

(1) Communications Cables. Conductors of one or more Class 2 or Class 3 circuits shall be permitted in the same cable with conductors of communications circuits. The cable shall be listed as a communications cable.

(2) Composite Cables. Cables constructed of individually listed Class 2, Class 3, and communications cables under a common jacket shall be permitted to be classified and listed as communications cables. The fire resistance rating of the composite cable shall be determined by the combustion characteristics of the composite cable.

(E) Class 2, Class 3, or Class 4 Cables with Other Limited-Energy Cables.

(1) Limited-Use Cables. Plenum, riser, general-purpose, and limited use limited-energy cables shall be permitted in the same enclosure or raceway.

(2) Other Than Limited-Use Cables. Plenum, riser, and general-purpose limited-energy cables shall be permitted in the same enclosure, cable tray, raceway, or cable routing assembly.

(F) Power-Limited Fire Alarm Circuits.

(1) Multiple PLFA Circuits. Cable and conductors of two or more power-limited fire alarm circuits shall be permitted within the same cable, enclosure, cable tray, raceway, or cable routing assembly.

(2) With Network-Powered Broadband. Network-powered broadband communications low-power circuits shall be permitted in the same enclosure, cable tray, raceway, or cable routing assembly with PLFA cables.

(3) With Class 2 Circuits. Conductors of one or more Class 2 circuits shall be permitted within the same cable, enclosure, cable tray, raceway, or cable routing assembly with conductors of power-limited fire alarm circuits if the insulation of the Class 2 circuit conductors in the cable, enclosure, raceway, or cable routing assembly is at least that required by the power-limited fire alarm circuits.

(4) With Class 3 or Communications Circuits. Cable and conductors of Class 3 and communications circuits shall be permitted within the same cable, enclosure, cable tray, raceway, or cable routing assembly with cables and conductors of power-limited fire alarm circuits.

(5) With Class 4 Circuits. Class 4 circuits shall be permitted in the same cable with power-limited fire alarm circuits if the cable is dual-listed.

(6) Audio System Circuits and PLFA Circuits. Audio system circuits described in 640.9(C) and installed using Class 2, Class 3, or Class 4 wiring methods in compliance with 722.136 shall not be installed in the same cable, cable tray, raceway, or cable routing assembly with PLFA circuits or cables.

(G) Manholes.
Outside plant communications, CATV, and optical fiber cables shall be permitted to be installed together in manholes.

Informational Note: See IEEE C2-2023, *National Electrical Safety Code,* Rules 323 and 341 for information on cable installation in manholes.

(H) Limited-Use and Undercarpet Limited-Energy Cables.
Limited-use and under-carpet limited-energy cables shall not be installed in cable trays or cable routing assemblies

722.113 Limited-Energy Circuits with Electric Light, Power, Class 1, Non-Power-Limited Fire Alarm, and Medium-Power Network-Powered Broadband Communications Circuits in Raceways, Compartments, and Boxes. Separation shall be provided in accordance with 722.112(A) for limited-energy cables and conductors, except as provided in 722.164 for optical fiber cables.

(A) General. Limited-energy cables shall be separated by at least 50 mm (2 in.) from conductors of any electric light, power, Class 1, non-power-limited fire alarm, or network-powered broadband communications medium-power circuits and shall not be placed the same raceway, compartment, enclosure, manhole, outlet box, device box, or similar, unless permitted by the 722.113(A)(1) through 722.113(A)(10).
Exception: Low-power and medium-power network-powered broadband communications circuit cables shall be permitted in the same raceway, cable tray, box, enclosure, or cable routing assembly.

(1) Separated by Barriers. Limited-energy cables shall be permitted to be placed in any raceway, compartment, outlet box, junction box, or other enclosure with conductors of electric light, power, Class 1, non-power-limited fire alarm, or medium-power network-powered broadband communications circuits if the conductors of electric light, power, Class 1, non-power-limited fire alarm, and network-powered broadband communications medium-power circuits are separated from the limited-energy and cables by a permanent barrier that maintains the 50 mm (2 in.) separation or a listed divider.

(2) Raceways Within Enclosures. Limited-energy cables shall be permitted to share the same enclosure with other systems if the limited-energy cables are separated by a raceway within the enclosure.

(3) Associated Systems Within Enclosures. Limited-energy cables shall be permitted to be placed in outlet boxes, junction boxes, compartments, or similar with power conductors where such conductors are introduced solely for power supply to the limited-energy equipment and 722.113(A)(3)(a) or 722.113(A)(3)(b) applies.

(a) The power circuit conductors shall be routed within the enclosure to maintain a minimum 6 mm (0.25 in.) separation from the limited-energy cables.

(b) The circuit conductors operate at 150 volts or less to ground and the limited-energy circuit conductors shall be either of the following:

(1) Installed as a Class 1 circuit

(2) A limited-energy cable of CL3, CL3R, CL3P or a permitted substitute and the conductors that emerge from the cable jacket are separated by a minimum 6 mm (0.25 in.) or by a nonconductive barrier from all other conductors

(4) Enclosures with Single Opening. Circuit conductors of limited-energy cables entering compartments, enclosures, device boxes, outlet boxes, or similar shall be permitted to be installed with Class 1, non-power-limited fire alarm, and network-powered broadband communications medium-power circuits where they are introduced solely to connect the equipment connected to the limited-energy circuits. If the limited-energy circuit conductors must enter an enclosure that is provided with a single opening, they shall be permitted to enter through a single fitting (such as a tee) if the conductors are separated from the conductors of the other circuits by a continuous and firmly fixed nonconductor, such as flexible tubing.

(5) Elevators.

(a) *Traveling Cables*. Separation of circuits shall not be required in elevator traveling cables constructed in accordance with 620.36.

(b) *Hoistways*. In hoistways, cables shall be installed in rigid metal conduit, rigid nonmetallic conduit, intermediate metal conduit, liquidtight flexible nonmetallic conduit, or electrical metallic tubing. For elevators or similar equipment, these conductors shall be permitted to be installed as provided in 620.21.

(6) In Raceways or Cables. Separation shall not be required if either of the following applies:

(a) The conductors of electric light, power, Class 1, non-power-limited fire alarm, and network-powered broadband communications medium-power circuits are in a raceway or in metal-sheathed, metal-clad, nonmetallic-sheathed, Type AC or Type UF cables.

(b) The limited-energy cable conductors are installed in a raceway or in metal-sheathed, metal-clad, nonmetallic-sheathed, Type TC, or Type UF cables.

(7) Protected by Firmly Fixed Nonconductors. Separation shall not be required if the limited-energy cables are permanently separated from the conductors of electric light, power, Class 1, non-power-limited fire alarm, and network-powered broadband communications medium-power circuits by a continuous and firmly fixed nonconductor, such as porcelain tubes or flexible tubing, in addition to the insulation on the wire.

(8) Manholes. Underground limited-energy circuit conductors and cables in a manhole shall be permitted to be installed with Class 1, non-power-limited fire alarm, and network-powered broadband communications medium-power circuits if one of the following conditions is met:

(1) The electric light, power, Class 1, non-power-limited fire alarm, and network-powered broadband communications medium-power circuit conductors are in a metal-enclosed cable or Type UF cable.

(2) The limited-energy circuit conductors are permanently and effectively separated from the conductors of other circuits by a continuous and firmly fixed nonconductor, such as flexible tubing, in addition to the insulation or covering on the wire.

(3) The limited-energy circuit conductors are permanently and effectively separated from conductors of the other circuits and securely fastened to racks, insulators, or other approved supports.

(9) Cable Trays. Limited-energy circuit conductors shall be permitted to be installed in cable trays if the conductors of the electric light, Class 1, and non-power-limited fire alarm circuits are separated by a solid fixed barrier of a material compatible with the cable tray or if the limited-energy circuits are installed in Type MC cable.

(10) If Protected. Limited-energy circuits shall be permitted to be installed together with the conductors of electric light, power, Class 1, non-power-limited fire alarm, and network-powered broadband communications medium-power circuits if they are functionally associated and installed using Class 1 wiring methods in accordance with 724.46.

722.120 Application and Installation of Limited-Energy Cables in Buildings. The application and installation of limited-energy cables in buildings shall comply with Table 722.120.

Table 722.120 Applications of Limited-Energy Cables in Buildings

Applications		Listed Limited-Energy Cable Type						
		Plenum Cables	Riser Cables	General Purpose Cables	Limited-Use Cables	Outdoor Cables		Undercarpet Cable
						PLTC	CL4Z & BLU	
In ducts specifically fabricated for environmental air as described in 720.22(B)	In fabricated ducts	Y	N	N	N	Y	N	N
	In metal raceway that complies with 300.25(B)	Y	Y	Y	Y	N	N	N
In other spaces used for environmental air (plenums) as described in 720.22(C)	In other spaces used for environmental air	Y	N	N	N	Y	N	N
	In metal raceway that complies with 300.25(C)	Y	Y	Y	Y	Y	N	N
	In plenum communications raceways	Y	N	N	N	N	N	N
	In plenum cable routing assemblies	Y	N	N	N	N	N	N
	Supported by open metal cable trays	Y	N	N	N	N	N	N
	Supported by solid bottom metal cable trays with solid metal covers	Y	Y	Y	Y	Y	N	N
In risers	In vertical runs	Y	Y	N	N	N	N	N
	In metal raceways	Y	Y	Y	Y	Y	N	N
	In fireproof shafts	Y	Y	Y	Y	Y	N	N

	In plenum communications raceways	Y	Y	N	N	N	N	N
	In plenum cable routing assemblies	Y	Y	N	N	N	N	N
	In riser communications raceways	Y	Y	N	N	N	N	N
	In riser cable routing assemblies	Y	Y	N	N	N	N	N
	In one- and two-family dwellings	Y	Y	Y	Y	Y	N	N
Within buildings in other than air-handling spaces and risers	General	Y	Y	Y	Y	Y	N	N
	In one- and two-family dwellings	Y	Y	Y	Y	Y	N	Y
	In multifamily dwellings	Y	Y	Y	Y	Y	N	Y
	In nonconcealed spaces	Y	Y	Y	Y	Y	N	Y
	Supported by cable trays	Y	Y	Y	N	Y	N	N
	Under carpet, modular flooring and planks	N	N	N	N	N	N	N
	In distributing frames and cross-connect arrays	Y	Y	Y	N	N	N	Y
	In any raceway recognized in Chapter 3	Y	Y	Y	Y	Y	N	N
	In plenum communications raceways	Y	Y	Y	N	Y	N	N
	In plenum cable routing assemblies	Y	Y	Y	N	Y	N	N
	In riser communications raceways	Y	Y	Y	N	Y	N	N
	In riser cable routing assemblies	Y	Y	Y	N	Y	N	N
	In general-purpose communications raceways	Y	Y	Y	N	Y	N	N
	In general-purpose cable routing assemblies	Y	Y	Y	N	Y	N	N

Note: An 'N' in the table indicates that the cable type shall not be permitted to be installed in the application. A 'Y' indicates that the cable type is permitted to be installed in the application, subject to the limitations of the installation rules.

Informational Note: One example of the installation rules restricting the installation of cables, is the use of plenum cables in fabricated ducts. Table 722.120 has a "Y" for the installation of plenum cables in these ducts, but 720.22(B)(1) only permits cabling directly associated with the direct action upon or sensing of the contained air, while 720.22(B)(2) limits the length of the cable to 4 ft.

722.121 Installations.

(A) Industrial Establishments. In industrial establishments where the conditions of maintenance and supervision ensure that only qualified persons service the installation, Type PLTC cable shall be permitted in accordance with either of the following:

(1) Where the cable is not subject to physical damage, Type PLTC cable that complies with the crush and impact requirements of Type MC cable and is identified as Type PLTC-ER for such use shall be permitted to be exposed between the cable tray and the utilization equipment or device. The cable shall be continuously supported and protected against physical damage using mechanical protection such as dedicated struts, angles, or channels. The cable shall be supported and secured at intervals not exceeding 1.8 m (6 ft). Where not subject to physical damage, Type

PLTC-ER cable shall be permitted to transition between cable trays and between cable trays and utilization equipment or devices for a distance not to exceed 1.8 m (6 ft) without continuous support. The cable shall be mechanically supported where exiting the cable tray to ensure that the minimum bending radius is not exceeded.

(2) Type PLTC cable, with a metallic sheath or armor in accordance with 722.100(A)(6), shall be permitted to be installed exposed. The cable shall be continuously supported and protected against physical damage using mechanical protection such as dedicated struts, angles, or channels. The cable shall be secured at intervals not exceeding 1.8 m (6 ft).

722.122 Limited-Energy Cable Substitutions. The substitutions for cables listed in Table 722.120 and illustrated in Figure 722.122 shall be permitted. Where substitute cables are installed, the installation requirements of the articles described in 722.4 shall also apply. CI cables shall be permitted to be installed to provide 2-hour circuit integrity. See 722.180(A).

Informational Note: See 722.100 for information on Types CMP, CMR, CM, and CMX.

Table 722.122 Permitted Limited-Energy Cable Substitutions

Cable Type	Cable Type	Permitted Substitutions
Plenum Cables	CL4P	None
	CL3P	CMP
	CL2P	CMP, CL3P
	CMP	None
	CATVP	CMP, BLP
	BLP	CMP, CL3P
	OFNP	None
	OFCP	OFNP
	FPLP	CMP
Riser Cables	CL4R	CL4P
	CL3R	CMP, CL3P, CMR
	CL2R	CMP, CL3P, CL2P, CMR, CL3R
	CMR	CMP
	CATVR	CATVP, CMP, CMR, BMR, BLP, BLR
	BLR	CMP, CL3P, CMR, CL3R, BLP, BMR
	OFNR	OFNP
	OFCR	OFNP, OFCP
	FPLR	CMP, FPLP, CMR
General-Purpose Cables	CL4	CL4P, CL4R
	CL3	CMP, CL3P, CMR, CL3R, CMG, CM, PLTC
	CL2	CMP, CL3P, CL2P, CMR, CL3R, CL2R, CMG, CM, PLTC, CL3
	CM	CMP, CMR, CMG
	CATV	CATVP, CMP, CATVR, CMR, CMG, CM, BMR, BLP, BLR, BL
	BL	CMP, CMR, CM, CMG, CL3P, CL3R, CL3, BMR, BM, BLP, BLR
	OFN	OFNP, OFNR
	OFC	OFNP, OFCP, OFNR, OFCR, OFNG, OFN
	FPL	CMP, FPLP, CMR, FPLR, CMG, CM
Alternative General-Purpose Cables		
	CMG	CMP, CMR, CM
	OFNG	OFNP, OFNR, OFN
	OFCG	OFNP, OFCP, OFNR, OFCR, OFNG, OFN

Limited- Use Cables	CL3X	CMP, CL3P, CMR, CL3R, CMG, CM, PLTC, CL3, CMX
	CL2X	CMP, CL3P, CL2P, CMR, CL3R, CL2R, CMG, CM, PLTC, CL3, CL2, CMX, CL3X
	CMX	CMP, CMR, CM, CMG
	CATVX	CATVP, CMP, CATVR, CMR, CATV, CMG, CM, BMR, BM, BLP, BLR, BL, BLX
	BLX	CMP, CMR, CM, CMG, CMX, CL3P, CL3R, CL3, CL3X, BMR, BM, BLP, BLR, BM, BL
Outdoor Cables	PLTC	None
	CL4Z	None
	BLU	None
Undercarpet Cables	CMUC	None

Figure 722.122 Communications, Class 3, Class 2 and PLTC Cable Substitution Hierarchy

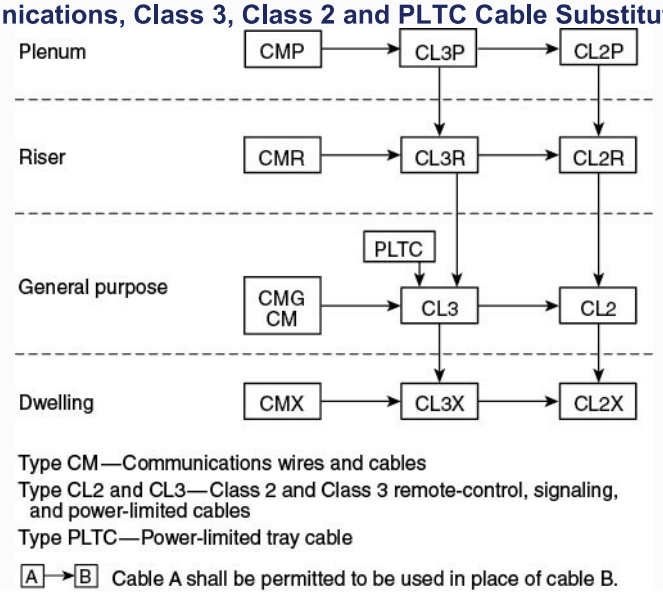

722.131 Installation of Limited-Energy Cables Used for Use in Communications Circuits.

(A) General. Installation of limited-energy cables used for communications circuits shall comply with 722.131(A) through 722.131(L). The types of limited-energy cables used for communications circuits are identified in Table 722.131(A).

Table 722.131(A) Cables Used for Communications Circuits

	Listed Cable Types
Plenum cables	CMP, CATVP, BLP, OFNP, OFCP
Riser cables	CMR, CATVR, BLR, OFNR, OFCR
General-purpose cables	CMG, CM, CATV, BL, OFNG, OFN, OFCG, OFC
Limited-use cables	CMX, CATVX, BLX
Under-carpet	CMUC
Underground	BLU

(B) Ducts Specifically Fabricated for Environmental Air. Installations of limited-energy cables used for communications circuits in ducts specifically fabricated for environmental air shall be in accordance with 722.131(B)(1) and 722.131(B)(2).

(1) Uses Permitted. The following limited-energy cables shall be permitted in ducts specifically fabricated for environmental air as described in 720.22(B) if they are directly associated with the air distribution system:

(1) Plenum cables up to 1.22 m (4 ft) in length

(2) Plenum, riser, general-purpose, and limited-use cables installed in raceways that are installed in compliance with 720.22(B)

(2) Uses Not Permitted. The following limited-energy cables shall not be permitted in ducts specifically fabricated for environmental air as described in 720.22(B):

(1) Riser, general-purpose, and limited-use cables

(2) Type CMUC cables

(3) Type BLU cables

Informational Note: See NFPA 90A-2024, *Standard for the Installation of Air-Conditioning and Ventilating Systems*, for information on fire protection of wiring installed in fabricated ducts.

(C) Other Spaces Used for Environmental Air (Plenums). Installations of limited-energy cables used for communications circuits in other spaces used for environmental air (plenums) shall be in accordance with 722.131(C)(1) and 722.131(C)(2).

(1) Uses Permitted. The following limited-energy cables shall be permitted in other spaces used for environmental air as described in 720.22(C):

(1) Plenum cables

(2) Plenum cables installed in plenum communications raceways

(3) Plenum cables installed in plenum cable routing assemblies

(4) Plenum cables supported by open metal cable tray systems

(5) Plenum, riser, general-purpose, and limited-use cables installed in raceways that are installed in compliance with 720.22(C)

(6) Plenum, riser, general-purpose cables supported by solid bottom metal cable trays with solid metal covers

(7) Plenum, riser, general-purpose, and limited-use cables installed in plenum, riser, and general-purpose communications raceways supported by solid bottom metal cable trays with solid metal covers

(2) Uses Not Permitted. The following limited-energy cables shall not be permitted in other spaces used for environmental air as described in 720.22(C):

(1) Riser, general-purpose, and limited-use cables

(2) Type CMUC cables

(3) Type BLU cables

Informational Note: See NFPA 90A-2024, *Standard for the Installation of Air-Conditioning and Ventilating Systems*, for information on fire protection of wiring installed in other spaces used for environmental air.

(D) Risers — Cables in Vertical Runs. Installations of limited-energy cables used for communications circuits in risers shall be in accordance with 722.131(D)(1) and 722.131(D)(2).

(1) Uses Permitted. The following limited-energy cables shall be permitted in vertical runs penetrating one or more floors and in vertical runs in a shaft:

(1) Plenum and riser cables

(2) Plenum and riser cables installed in the following:

a. Plenum communications raceways

b. Riser communications raceways

c. Plenum cable routing assemblies

d. Riser cable routing assemblies

(2) Uses Not Permitted. The following limited-energy cables shall not be permitted in risers:

(1) General-purpose and limited-use cables

(2) Type CMUC cables

(3) Type BLU cables

Informational Note: See 720.21 for firestop requirements for floor penetrations.

(E) Risers — Cables in Metal Raceways. Installations of limited-energy cables used for communications circuits in metal raceways in a riser having firestops at each floor shall be in accordance with 722.131(E)(1) and 722.131(E)(2).

(1) Uses Permitted. The following limited-energy cables shall be permitted in metal raceways in a riser having firestops at each floor:

(1) Plenum, riser, general-purpose, and limited-use cables

(2) Plenum, riser, general-purpose, and limited-use cables installed in the following:

a. Plenum communications raceways (innerduct)

b. Riser communications raceways (innerduct)

c. General-purpose communications raceways (innerduct)

(2) Uses Not Permitted. The following limited-energy cables shall not be permitted in metal raceways in a riser having firestops at each floor:

(1) Type CMUC cables

(2) Type BLU cables

Informational Note: See 720.21 for firestop requirements for floor penetrations.

(F) Risers — Cables in Fireproof Shafts. Installations of limited-energy cables used for communications circuits in fireproof riser shafts having firestops at each floor shall be in accordance with 722.131(F)(1) and 722.131(F)(2).

(1) Uses Permitted. The following limited-energy cables shall be permitted to be installed in fireproof riser shafts having firestops at each floor:

(1) Plenum, riser, general-purpose, and limited-use cables

(2) Plenum, riser, general-purpose, and limited-use cables installed in the following:

a. Plenum communications raceways

b. Riser communications raceways

c. General-purpose communications raceways

d. Plenum cable routing assemblies

e. Riser cable routing assemblies

f. General-purpose cable routing assemblies

(2) Uses Not Permitted. The following limited-energy cables shall not be permitted in metal raceways in fireproof riser shafts having firestops at each floor:

(1) Type CMUC cables

(2) Type BLU cables

Informational Note: See 720.21 for firestop requirements for floor penetrations.

(G) Risers — One- and Two-Family Dwellings. Installations of limited-energy cables used for communications circuits in risers in one- and two-family dwellings shafts shall be in accordance with 722.131(G)(1) and 722.131(G)(2).

(1) Uses Permitted. The following limited-energy cables shall be permitted in one- and two-family dwellings:

(1) Plenum, riser, and general-purpose cables

(2) Limited-use cables less than 6 mm (0.25 in.) in diameter

(3) Plenum, riser, and general-purpose cables installed in the following:

a. Plenum communications raceways

b. Riser communications raceways

c. General-purpose communications raceways

d. Plenum cable routing assemblies

e. Riser cable routing assemblies

f. General-purpose cable routing assemblies

(2) Uses Not Permitted. The following limited-energy cables shall not be permitted in risers in one- and two-family dwellings:

(1) Type CMUC cables

(2) Type BLU cables

(H) Cable Trays. Installations of limited-energy cables used for communications circuits supported by cable trays shall be in accordance with 722.131(H)(1) and 722.131(H)(2).

(1) Uses Permitted. The following limited-energy cables shall be permitted to be supported by cable trays:

(1) Plenum, riser, and general-purpose cables

(2) Plenum, riser, and general-purpose cables installed in the following:

a. Plenum communications raceways

b. Riser communications raceways

c. General-purpose communications raceways

(2) Uses Not Permitted. The following limited-energy cables shall not be supported by cable trays:

(1) Limited-use cables

(2) Type CMUC cables

(3) Type BLU cables

(I) Distributing Frames and Cross-Connect Arrays. Installations of limited-energy cables used for communications circuits in distributing frames and cross-connect arrays shall be in accordance with 722.131(I)(1) and 722.131(I)(2).

(1) Uses Permitted. The following limited-energy cables shall be permitted to be installed in distributing frames and cross-connect arrays:

(1) Plenum, riser and general-purpose cables

(2) Plenum, riser, and general-purpose cables installed in the following:

a. Plenum communications raceways

b. Riser communications raceways

c. General-purpose communications raceways

d. Plenum cable routing assemblies

e. Riser cable routing assemblies

f. General-purpose cable routing assemblies

(2) Uses Not Permitted. The following limited-energy cables shall not be installed in distributing frames and cross-connect arrays:

(1) Type BLU cables

(2) Limited-use cables

(3) Type CMUC cables

(J) Other Building Locations. Installations of limited-energy cables used for communications circuits in building locations other than those covered in 722.131(B) through 722.131(I) shall be in accordance with 722.131(J)(1) and 722.131(J)(2).

(1) Uses Permitted. The following limited-energy cables shall be permitted to be installed in building locations other than the locations covered in 722.131(B) through 722.131(I):

(1) Plenum, riser, and general-purpose cables

(2) Limited-use cables with a maximum of 3 m (10 ft) of exposed length in nonconcealed spaces

(3) Plenum, riser, and general-purpose cables installed in the following:

a. Plenum communications raceways

b. Riser communications raceways

c. General-purpose communications raceways

(4) Plenum, riser, and general-purpose cables installed in the following:

a. Plenum cable routing assemblies

b. Riser cable routing assemblies

c. General-purpose cable routing assemblies

(5) Plenum, riser, general-purpose, and limited-use cables installed in raceways recognized in Chapter 3

(6) Type CMUC cables installed under carpet, modular flooring, and planks.

(2) Uses Not Permitted. The following limited-energy cables shall not be installed in building locations other than the locations covered in 722.131(B) through 722.131(I):

(1) Type BLU cables

(K) Multifamily Dwellings. Installations of limited-energy cables used for communications circuits in multifamily dwellings shall be in accordance with 722.131(K)(1) and 722.131(K)(2).

(1) Uses Permitted. The following limited-energy cables shall be permitted to be installed in multifamily dwellings in locations other than the locations covered in 722.131(B) through 722.131(G):

(1) Plenum, riser, and general-purpose cables

(2) Limited-use cables less than 6 mm (0.25 in.) in diameter in nonconcealed spaces

(3) Plenum, riser, and general-purpose cables installed in the following:

a. Plenum communications raceways

b. Riser communications raceways

c. General-purpose communications raceways

(4) Plenum, riser, and general-purpose cables installed in the following:

a. Plenum cable routing assemblies

b. Riser cable routing assemblies

c. General-purpose cable routing assemblies

(5) Plenum, riser, general-purpose, and limited-use cables installed in raceways recognized in Chapter 3

(6) Type CMUC cables installed under carpet, modular flooring, and planks

(2) Uses Not Permitted. The following limited-energy cables shall not be installed in multifamily dwellings in locations other than the locations covered in 722.131(B) through 722.131(G):

(1) Type BLU cables

(L) One- and Two-Family Dwellings. Installations of limited-energy cables used for communications circuits in one- and two-family dwellings in locations other than those covered in 722.131(B) through 722.131(F) shall be in accordance with 722.131(L)(1) and 722.131(L)(2).

(1) Uses Permitted. The following limited-energy cable shall be permitted to be installed in one- and two-family dwellings in locations other than the locations covered in 722.131(B) through 722.131(F):

(1) Plenum, riser, and general-purpose cables

(2) Limited-use cables less than 6 mm (0.25 in.) in diameter

(3) Plenum, riser, and general-purpose cables installed in the following:

a. Plenum communications raceways

b. Riser communications raceways

c. General-purpose communications raceways

(4) Plenum, riser, and general-purpose cables installed in the following:

a. Plenum cable routing assemblies

b. Riser cable routing assemblies

c. General-purpose cable routing assemblies

(5) Plenum, riser, general-purpose, and limited-use cables installed in raceways recognized in Chapter 3

(6) Type CMUC cables installed under carpet, modular flooring, and planks

(2) Uses Not Permitted. The following limited-energy cables shall not be installed in one- and two-family dwellings in locations other than those covered in 722.131(B) through 722.131(F):

(1) Type BLU cables

722.132 Permitted Substitutions of Listed Cables Used for Communications Circuits and Communications Wires.

(A) Permitted Substitutions of Listed Communications Cables. The substitutions for communications cables listed in Table 722.132(A) and illustrated in Figure 722.132(A) shall be permitted.

Table 722.132(A) Listed Communications Cable Substitutions

Cable Type	Permitted Substitutions
CMR	CMP
CMG, CM	CMP, CMR
CMX	CMP, CMR, CMG, CM

Figure 722.132(A) Listed Communications Cable Substitution Hierarchy.

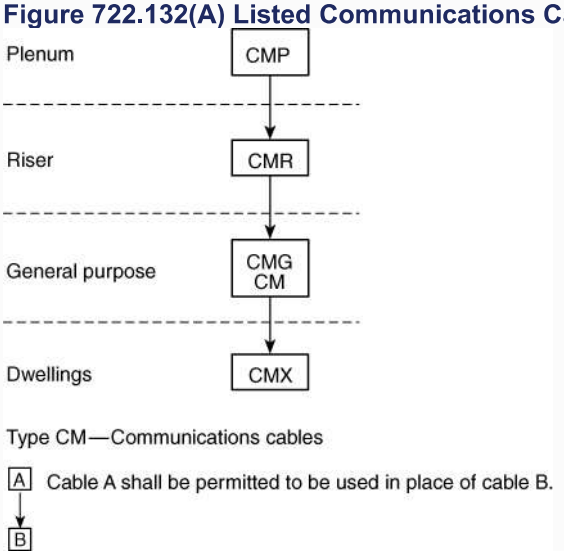

722.133 Installation of Communications Wires and Cables and CATV-Type Coaxial Cables. Installation of communications wires and cables, from the protector to the equipment, or where no protector is required, communications wires and cables attached to the outside or inside of the building, shall comply with 722.133(A) and 722.133(B). Installation of CATV-type coaxial cables, beyond the point of grounding as defined in 750.48, shall comply with 722.133(A) through 722.133(C).

(A) In Raceways, Cable Trays, Boxes, Cables, Enclosures, and Cable Routing Assemblies.

(1) Other Circuits. Listed communications cables and CATV-type coaxial cables shall be permitted in the same raceway, cable tray, box, enclosure, or cable routing assembly together and with other limited-energy cables.

(2) Class 2 and Class 3 Circuits. Class 1 circuits shall not be run in the same cable with communications circuits. Class 2 and Class 3 circuit conductors shall be permitted in the same listed communications cable with communications circuits.

(3) Electric Light, Power, Class 1, Non-Power-Limited Fire Alarm, and Network-Powered Broadband Communications Medium-Power Circuits in Raceways, Compartments, and Boxes. Communications wires and cables and CATV-type coaxial cables shall not be placed in any raceway, compartment, outlet box, junction box, or similar fitting with conductors of electric light, power, Class 1, non-power-limited fire alarm, or network-powered broadband communications medium-power circuits.

Exception No. 1: Communications wires and cables and CATV-type coaxial cables shall be permitted to be placed in any raceway, compartment, outlet box, junction box, or other enclosures with conductors of electric light, power, Class 1, non-power-limited fire alarm, or medium-power network-powered broadband communications circuits where all of the conductors of electric light, power, Class 1, non-power-limited fire alarm, and network-powered broadband communications medium-power circuits are separated from all of the communications wires and cables and CATV-type coaxial cables by a permanent barrier or listed divider.

Exception No. 2: Communications wires and cables and CATV-type coaxial cables shall be permitted to be placed in outlet boxes, junction boxes, or similar fittings or compartments with power conductors where such conductors are introduced solely for power supply to the communications and coaxial cable system distribution equipment. The power circuit conductors shall be routed within the enclosure to maintain a minimum 6 mm (¼ in.) separation from the communications wires and cables and the CATV-type coaxial cables.

Exception No. 3: Separation of circuits shall not be required in elevator traveling cables constructed in accordance with by 620.36.

(B) Other Applications. Communications wires and cables and CATV-type coaxial cables shall be separated at least 50 mm (2 in.) from conductors of any electric light, power, Class 1, non-power-limited fire alarm, or network-powered broadband communications medium-power circuits.

Exception No. 1: Separation shall not be required where either of the following applies: (1) All of the conductors of electric light, power, Class 1, non-power-limited fire alarm, and network-powered broadband medium-power communications circuits are in a raceway or in metal-sheathed, metal-clad, nonmetallic-sheathed, Type AC, or Type UF cables. (2) All of the communications wires and cables and all of the CATV-type coaxial cables are encased in raceway.

Exception No. 2: Separation shall not be required where the communications wires and cables and CATV-type coaxial cables are permanently separated from the conductors of electric light, power, Class 1, non-power-limited fire alarm, and network-powered broadband communications medium-power circuits by a continuous and firmly fixed nonconductor, such as porcelain tubes or flexible tubing, in addition to the insulation on the wire.

(C) Support of Communications Wires and Cables and CATV-Type Coaxial Cables. Raceways shall be used for their intended purpose. Communications wires and cables and CATV-type coaxial cables shall not be strapped, taped, or attached by any means to the exterior of any raceway as a means of support.

Exception: Overhead (aerial) spans of communications drop wires, communications cables, and CATV-type coaxial cables shall be permitted to be attached to the exterior of a raceway-type mast intended for the attachment and support of such wires and cables.

(D) Permitted Substitutions of Listed Limited-Energy Coaxial Type CATV Cables. The substitutions for limited-energy CATV-type coaxial cables in Table 722.133(D) and illustrated in Figure 722.133(D) shall be permitted.

Informational Note: The substitute cables in Table 722.133(D) and Figure 722.133(D) are only coaxial-type cables.

Table 722.133(D) Permitted Substitutions of Listed Coaxial Type CATV Cables

Cable Type	Permitted Substitutions
CATVP	CMP, BLP
CATVR	CATVP, CMP, CMR, BMR, BLP, BLR
CATV	CATVP, CMP, CATVR, CMR, CMG, CM, BMR, BM, BLP, BLR, BL
CATVX	CATVP, CMP, CATVR, CMR, CATV, CMG, CM, BMR, BM, BLP, BLR, BL, BLX

Figure 722.133(D) Listed Limited-Energy Coaxial Type CATV Cables Permitted Substitution Hierarchy.

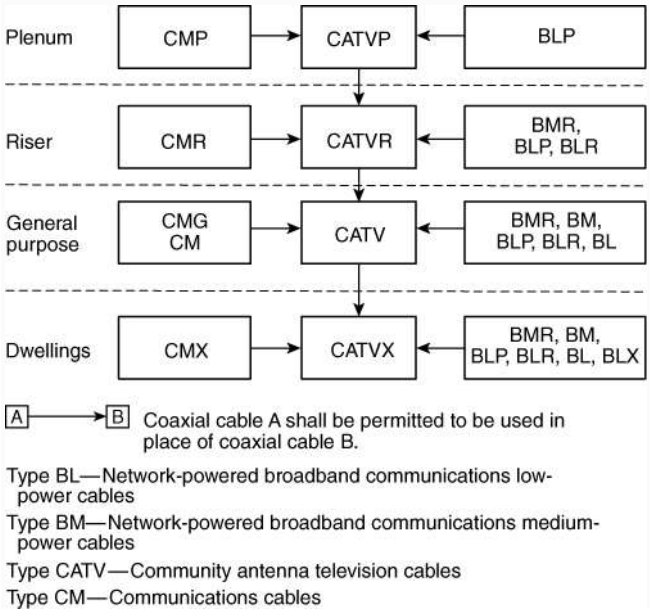

722.134 Installation of Network-Powered Broadband Communications Cables and Equipment. Cable and equipment installations within buildings shall comply with 722.134(A) through 722.134(C), as applicable.

(A) Separation of Conductors.

(1) In Raceways, Cable Trays, Boxes, Enclosures, and Cable Routing Assemblies.

(a) N*etwork-Powered Broadband Communications Low- and Medium-Power Circuit Cables.* Network-powered broadband communications low- and medium-power cables shall be permitted in the same raceway, cable tray, box, enclosure, or cable routing assembly.

(b) *Network-Powered Broadband Communications Low-Power Circuit Cables with Other Circuits.* Network-powered broadband communications low-power cables shall be permitted in the same raceway, cable tray, box, enclosure, or cable routing assembly with other listed limited-energy cables.

(c) *Electric Light, Power, Class 1, Non-power-limited fire alarm Circuit Cables.* Network-powered broadband communications low-power cables shall not be placed in any raceway, cable tray, compartment, outlet box, junction box, or similar fittings with conductors of electric light, power, Class 1, or non-power-limited fire alarm circuit cables.

Exception No. 1: Network-powered broadband communications low-power cable shall be permitted to be placed in a raceway, cable tray, compartment, outlet box, junction box, or similar fittings with conductors of electric light, power, Class 1, or non-power-limited fire alarm circuit cables where all of the conductors of electric light, power, Class 1, non-power-limited fire alarm circuits are separated from all of the network-powered broadband communications low-power cables by a permanent barrier or listed divider.

Exception No. 2: Where power circuit conductors are installed in in outlet boxes, junction boxes, or similar fittings or compartments where such conductors are introduced solely for power supply to the network-powered broadband communications system distribution equipment, the power circuit conductors shall be routed within the enclosure to maintain a minimum 6 mm (1⁄4 in.) separation from network-powered broadband communications low-power cables.

(2) Other Applications. Network-powered broadband communications low-power cable shall be separated at least 50 mm (2 in.) from conductors of any electric light, power, Class 1, and non-power-limited fire alarm circuits.
Exception No. 1: Separation shall not be required where either of the following applies:

(1) All of the conductors of electric light, power, Class 1, and non-power-limited fire alarm circuits are in a raceway or in metal-sheathed, metal-clad, nonmetallic-sheathed, Type AC, or Type UF cables.

(2) All of the network-powered broadband communications low-power cables are encased in a raceway.

Exception No. 2: Separation shall not be required where the network-powered broadband communications low-power cables are permanently separated from the conductors of electric light, power, Class 1, and non-power-limited fire alarm circuits by a continuous and firmly fixed nonconductor, such as porcelain tubes or flexible tubing, in addition to the insulation on the wire.

(B) Support of Network-Powered Broadband Communications Low-Power Cables. Raceways shall be used for their intended purpose. Network-powered broadband communications low-power cables shall not be strapped, taped, or attached by any means to the exterior of any conduit or raceway as a means of support.

(C) Bends. Bends in network broadband communications low-power cable shall be made so as not to damage the cable. The radius of the curve of the inner edge of any bend shall not be less than 10 times the diameter of the cable.

Informational Note: See ANSI/TIA-568.0-E, *Generic Telecommunications Cabling for Customer Premises*, for information on bend radii of network broadband cable during different types of installation conditions.

722.135 Underground Network-Powered Broadband Communications Low-Power Cables Entering Buildings. Underground network-powered broadband communications low-power cables entering buildings shall comply with 722.135(A) and 722.135(B).

(A) Protection from Physical Damage. Direct-buried cable, conduit, or other raceways shall be installed to meet the minimum cover requirements of Table 722.135(A). In addition, direct-buried cables emerging from the ground shall be protected by enclosures, raceways, or other approved means extending from the minimum cover distance required by Table 830.47(A) below grade to a point at least 2.5 m (8 ft) above finished grade. In no case shall the protection be required to exceed 450 mm (18 in.) below finished grade. Types BMU and BLU direct-buried cables emerging from the ground shall be installed in rigid metal conduit (RMC), intermediate metal conduit (IMC), rigid nonmetallic conduit, or other approved means extending from the minimum cover distance required by Table 830.47(A) below grade to the point of entrance.

Exception: Protection from physical damage shall not be required if a network-powered broadband communications low-power circuit is equipped with a listed fault protection device that is located on the network side of the network-powered broadband low-power cable being protected and the device is appropriate to the network-powered broadband communications low-power cable used.

Table 722.135(A) Network-Powered Broadband Communications Systems Minimum Cover Requirements.

Location of Wiring Method or Circuit	Direct Burial Cables		Rigid Metal Conduit (RMC) or Intermediate Metal Conduit (IMC)		Nonmetallic Raceways Listed for Direct Burial; Without Concrete Encasement or Other Approved Raceways	
	mm	in.	mm	in.	mm	in.
All locations not specified below	450	18	150	6	300	12
In trench below 50 mm (2 in.) thick concrete or equivalent	300	12	150	6	150	6
Under a building (in raceway only)	0	0	0	0	0	0
Under minimum of 100 mm (4 in.) thick concrete exterior slab with no vehicular traffic and the slab extending not less than 150 mm (6 in.) beyond the underground installation	300	12	100	4	100	4
One- and two-family dwelling driveways and outdoor parking areas and used only for dwelling-related purposes	300	12	300	12	300	12

Notes:
1. Cover shall be the shortest distance measured between a point on the top surface of any direct-buried cable, conduit, or other raceway and the top surface of finished grade, concrete, or similar cover.
2. Raceways approved for burial only where concrete encased shall require a concrete envelope not less than 50 mm (2 in.) thick.
3. Lesser depths shall be permitted where cables rise for terminations or splices or where access is otherwise required.
4. Where solid rock is encountered, all wiring shall be installed in metal or nonmetallic raceway permitted for direct burial. The raceways shall be covered by a minimum of 50 mm (2 in.) of concrete extending down to rock.

(B) Pools. Cables located under the pool or within the area extending 1.5 m (5 ft) horizontally from the inside wall of the pool shall meet those clearances and requirements specified in 680.11.

722.136 Permitted Substitutions of Network-Powered Broadband Communications Low-Power Cables. The substitutions for network-powered broadband low-power cables listed in Table 722.136 shall be permitted.

Table 722.136 Permitted Substitutions of Network-Powered Broadband Communications Low-Power Cables.

Cable Type	Permitted Cable Substitutions
BLP	CMP, CL3P
BLR	CMP, CL3P, CMR, CL3R, BLP, BMR
BL	CMP, CMR, CM, CMG, CL3P, CL3R, CL3, BMR, BM, BLP, BLR
BLX	CMP, CMR, CM, CMG, CMX, CL3P, CL3R, CL3, CL3X, BMR, BM, BLP, BRP, BL

722.140 Applications, Installations and Wiring Methods for Class 2 or Class 3 Circuits.

(A) General. Class 2 and Class 3 circuits on the load side of the power source shall be permitted to be installed using wiring methods and materials in accordance with 722.140(A), 722.140(B), or a combination of both.

(1) Class 1 Wiring Methods and Materials. Use of Class 1 wiring methods for Class 2 and Class 3 circuits shall be permitted. Separation from electric light, power, Class 1, non-power-limited fire alarm circuit conductors, and network-powered broadband communications medium-power cables shall comply with 725.136.

Exception: The ampacity adjustment factors given in 310.15(C)(1) shall not apply.

(2) Class 2 and Class 3 Wiring Methods and Materials. Conductors on the load side of the power source shall be insulated in accordance with 722.100 and 722.102 and be installed in accordance with 722.110, 722.140(B), and 725.136.

Exception No. 1: As provided for in 620.21 for elevators and similar equipment.

Exception No. 2: Other wiring methods and materials installed in accordance with 725.3 shall be permitted to extend or replace the conductors and cables described in 722.100(A) and permitted by 722.140(A)(2).

Exception No. 3: Bare Class 2 conductors shall be permitted as part of a listed intrusion protection system where installed in accordance with the listing instructions for the system.

(B) Cables Transmitting Power and Data.

(1) Classification of Circuits. Circuits carrying data and power shall be classified as electrical power circuits in accordance with the type of electrical power carried.

Exception: PoE circuits shall be classified as communications, or Class 2 or Class 3.

(2) Bundling of Cables Transmitting Power and Data. Sections 722.140(B)(1) and 722.140(B)(2) shall apply to Class 2 and Class 3 circuits that transmit power and data to a powered device over listed cabling. Section 720.30 and Article 725, Parts I and III shall apply to Class 2 and Class 3 circuits that transmit power and data. The conductors that carry power for the data circuits shall be copper. The current in the power circuit shall not exceed the current limitation of the connectors.

Informational Note No. 1: One example of the use of cables that transmit power and data is the connection of closed-circuit TV cameras (CCTV).

Informational Note No. 2: The 8P8C connector is in widespread use with powered communications systems. IEC 60603-7-2008, Connectors for electronic equipment — Part 7-1: Detail specification for 8-way, unshielded, free and fixed connectors, specifies these connectors to have a current-carrying capacity per contact of 1.0 amperes maximum at 60°C (149°F). See IEC 60603-7 for more information on current-carrying capacity at higher and lower temperatures.

Informational Note No. 3: The requirements of Table 722.140(B)(4) were derived for carrying power and data over 4-pair copper balanced twisted pair cabling. ANSI/TIA 568-C.2-2009, Commercial Building Telecommunications Cabling Standard — Part 2: Balanced Twisted-Pair Telecommunications Cabling and Components, describes this type of cabling.

Informational Note No. 4: See TIA-TSB-184-A-2017, Guidelines for Supporting Power Delivery Over Balanced Twisted-Pair Cabling, for information on installation and management of balanced twisted pair cabling supporting power delivery.

Informational Note No. 5: See ANSI/NEMA C137.3-2017, American National Standard for Lighting Systems — Minimum Requirements for Installation of Energy Efficient Power over Ethernet (PoE) Lighting Systems, for information on installation of cables for PoE lighting systems.
Informational Note No. 6: Rated current for power sources covered in 722.130 is the output current per conductor the power source is designed to deliver to an operational load at normal operating conditions, as declared by the manufacturer. In the design of these systems, the actual current in a given conductor might vary from the rated current per conductor by as much as 20 percent. An increase in current in one conductor is offset by a corresponding decrease in current in one or more conductors of the same cable.

(3) Use of 4-Pair Class 2 or Class 3 Cables to Transmit Power and Data. Where Type CL3P, Type CL2P, Type CL3R, Type CL2R, Type CL3, or Type CL2 4-pair cables transmit power and data, the rated current per conductor of the power source shall not exceed the ampacities in Table 722.140(B) at an ambient temperature of 30°C (86°F). For ambient temperatures above 30°C (86°F), the correction factors in Table 310.15(B)(1)(1) or in Equation 310.15(B) shall apply.

Exception: Compliance with Table 722.140(B) shall not be required for installations where conductors are 24 AWG or larger and the rated current per conductor of the power source does not exceed 0.3 amperes.

Informational Note: One example of the use of Class 2 cables is a network of closed-circuit TV cameras using 24 AWG, 60°C (140°F) rated, Type CL2R, Category 5e balanced twisted-pair cabling.

(4) Use of Class 2-LP, Class 3-LP and Communications LP Cables to Transmit Power and Data. Type CL3P-LP, Type CL2P-LP, Type CL3R-LP, Type CL2R-LP, Type CL3-LP, Type CL2-LP, CMP-LP, CMR-LP, and CM-LP cables shall be permitted to supply power to equipment from a power source with a rated current per conductor up to the marked current limit located immediately following the suffix "-LP" and shall be permitted to transmit data to the equipment. Where the number of bundled LP cables is 192 or less and the selected ampacity of the cables in accordance with Table 722.140(B)(4) exceeds the marked current limit of the cable, the ampacity determined from the table shall be permitted to be used. For ambient temperatures above 30°C (86°F), the correction factors of Table 310.15(B)(1)(1) or Equation 310.15(B) shall apply. The Class 2-LP and Class 3-LP cables shall comply with the following, as applicable:

(1) Cables with the suffix "-LP" shall be permitted to be installed in bundles, raceways, cable trays, communications raceways, and cable routing assemblies.

(2) Cables with the suffix "-LP" and a marked current limit shall follow the substitution hierarchy of 722.122 for the cable type without the suffix "-LP" and without the marked current limit.

(3) System design shall be permitted by qualified persons under engineering supervision.

Informational Note: An example of the marking on a 23 AWG, 4-pair, Class 2 cable rated 75°C (167°F) with an LP current rating of 0.6 amperes per conductor is "CL2-LP(0.6A) 75°C 23 AWG 4-pair". See 722.100(A)(9).

Table 722.140(B)(4) Ampacities of Each Conductor in Amperes in 4-Pair Class 2 or Class 3 Balanced Twisted-Pair Cables Based on Copper Conductors at an Ambient Temperature of 30°C (86°F) with All Conductors in All Cables Carrying Current, 60°C (140°F), 75°C (167°F), and 90°C (194°F) Rated Cables

AWG	Number of 4-Pair Cables in a Bundle																	
	1–7			8–19			20–37			38–61			62–91			92–192		
	Temperature Rating			Temperature Rating			Temperature Rating			Temperature Rating			Temperature Rating			Temperature Rating		
	60°C	75°C	90°C	60°C	75°C	90°C	60°C	75°C	90°C	60°C	75°C	90°C	60°C	75°C	90°C	60°C	75°C	90°C
26	1	1.23	1.42	0.71	0.87	1.02	0.55	0.68	0.78	0.46	0.57	0.67	0.45	0.55	0.64	NA	NA	NA
24	1.19	1.46	1.69	0.81	1.01	1.17	0.63	0.78	0.91	0.55	0.67	0.78	0.46	0.56	0.65	0.4	0.48	0.55
23	1.24	1.53	1.78	0.89	1.11	1.28	0.77	0.95	1.1	0.66	0.8	0.93	0.58	0.71	0.82	0.45	0.55	0.63
22	1.5	1.86	2.16	1.04	1.28	1.49	0.77	0.95	1.11	0.66	0.82	0.96	0.62	0.77	0.89	0.53	0.63	0.72

Notes:
1. For bundle sizes over 192 cables, or for conductor sizes smaller than 26 AWG, ampacities shall be permitted to be determined by qualified personnel under engineering supervision.
2. Where only half of the conductors in each cable are carrying current, the values in the table shall be permitted to be increased by a factor of 1.4.

Informational Note No. 1: Elevated cable temperatures can reduce a cable's data transmission performance. For information on practices for 4-pair balanced twisted pair cabling, see TIA-TSB-184-A, *Guidelines for Supporting Power Delivery Over Balanced Twisted-Pair Cabling*, and ANSI/TIA-568-C., *Balanced Twisted-Pair Telecommunications Cabling and Components Standard*, 6.4.7, 6.6.3, and Annex G, which provide guidance on adjustments for operating temperatures between 20°C and 60°C (68°F and 140°F).

Informational Note No. 2: The per-contact current rating of connectors can limit the maximum allowable current below the ampacity shown in Table 722.140.

722.150 Applications, Installations, and Wiring Methods for Class 4 Circuit Cables.

(A) Applications. Class 4 cables shall not be permitted for any application that is not part of a Class 4 system.
Exception: Use of Class 4 cable for other applications shall be permitted if the cable has been listed as suitable for other applications.

(B) Installation in Dwelling Units. Where Class 4 cables are used in a dwelling unit, 722.150(C) shall apply.

(C) Ampacity. The ampacity of Class 4 cables shall comply with 720.6(B)(1) based on the temperature rating of the Class 4 cable for conductors sized 16 AWG to 6 AWG. For conductors sized 24 AWG to 17 AWG, the Class 4 cable shall have an ampacity in accordance with the marking FMP-XXA, where XX is the maximum ampacity permitted. In a dwelling unit(s), not more than 20 current- carrying conductors shall be installed without maintaining spacing.

Informational Note No. 1: See 722.100(A)(16) for additional Class 4 cable requirements.

Informational Note No. 2: See UL 1400-1-2022, *Outline of Investigation for Fault-Managed Power Systems — Part 1: General Requirements*, and UL 1400-2-2023, *Outline of Investigation for Fault-Managed Power Systems — Part 2: Requirements for Class 4 Cables*, for information on determining maximum ampacities.

722.162 Installation of Optical Fiber Cables in Raceways, Cable Routing Assemblies, and Cable Trays.

(A) Types of Raceways.
Optical fiber cables shall be permitted to be installed in any raceway that complies with either 722.162(A)(1) or 722.162(A)(2).

(1) Communications Raceways. Optical fiber cables shall be permitted to be installed in listed communications raceways selected in accordance with Table 722.110(A).

(2) Other Recognized Raceways. Optical fiber cables shall be permitted to be installed in raceways recognized by and installed in accordance with Chapter 3.

(B) Raceway Fill for Optical Fiber Cables. Raceway fill for optical fiber cables shall comply with either 722.162(B)(1) or 722.162(B)(2).

(1) Without Electric Light or Power Conductors. Where optical fiber cables are installed in a raceway without electric light or power conductors, the raceway fill requirements of Chapters 3 and 9 shall not apply.

(2) Nonconductive Optical Fiber Cables with Electric Light or Power Conductors. Where nonconductive optical fiber cables are installed with electric light or power conductors in a raceway, the raceway fill requirements of Chapters 3 and 9 shall apply.

(C) Cable Routing Assemblies. Optical fiber cables shall be permitted to be installed in listed cable routing assemblies selected in accordance with Table 722.110(B).

(D) Cable Trays. Optical fiber cables shall be permitted to be installed in metal or listed nonmetallic cable tray systems.

722.163 Installation of Optical Fiber Cable in Innerduct. Listed plenum communications raceways, listed riser communications raceways, and listed general-purpose communications raceways selected in accordance with Table 722.110(A) shall be permitted to be installed as innerduct in any type of listed raceway permitted in Chapter 3.

722.164 Installation of Optical Fibers and Electrical Conductors.

(A) In Cable Trays and Raceways. Conductive optical fiber cables contained in an armored or metal-clad-type sheath and nonconductive optical fiber cables shall be permitted to occupy the same cable tray or raceway with conductors for electric light, power, Class 1, non-power-limited fire alarm, Type ITC, or network-powered broadband communications medium-power circuits operating at 1000 volts or less. Conductive optical fiber cables without an armored or metal-clad-type sheath shall not be permitted to occupy the same cable tray or raceway with conductors for electric light, power, Class 1, non-power-limited fire alarm, Type ITC, or network-powered broadband communications medium-power circuits, unless all of the conductors of electric light, power, Class 1, non-power-limited fire alarm, and medium-power network-powered broadband communications medium-power circuits are separated from all of the optical fiber cables by a permanent barrier or listed divider.

(B) In Cabinets, Outlet Boxes, and Similar Enclosures. Nonconductive optical fiber cables shall not be permitted to occupy the same cabinet, outlet box, panel, or similar enclosure housing the electrical terminations of an electric light, power, Class 1, non-power-limited fire alarm, or network-powered broadband communications medium-power circuit unless one or more of the following conditions exist:

(1) The nonconductive optical fiber cables are functionally associated with the electric light, power, Class 1, non-power-limited fire alarm, or network-powered broadband communications medium-power circuit.

(2) The conductors for electric light, power, Class 1, non-power-limited fire alarm, Type ITC, or network-powered broadband communications medium-power circuits operate at 1000 volts or less.

(3) The nonconductive optical fiber cables and the electrical terminations of electric light, power, Class 1, non-power-limited fire alarm, or network-powered broadband communications medium-power circuit are installed in factory- or field-assembled control centers.

(4) The nonconductive optical fiber cables are installed in an industrial establishment where conditions of maintenance and supervision ensure that only qualified persons service the installation.

When optical fibers are within the same hybrid cable for electric light, power, Class 1, non-power-limited fire alarm, or network-powered broadband communications medium-power circuits operating at 1000 volts or less, they shall be permitted to be installed only where the functions of the optical fibers and the electrical conductors are associated.

Optical fibers in hybrid optical fiber cables containing only current-carrying conductors for electric light, power, or Class 1 circuits rated 1000 volts or less shall be permitted to occupy the same cabinet, cable tray, outlet box, panel, raceway, or other termination enclosure with conductors for electric light, power, or Class 1 circuits operating at 1000 volts or less.

Optical fibers in hybrid optical fiber cables containing current-carrying conductors for electric light, power, or Class 1 circuits rated over 1000 volts shall be permitted to occupy the same cabinet, cable tray, outlet box, panel, raceway, or other termination enclosure with conductors for electric light, power, or Class 1 circuits in industrial establishments, where conditions of maintenance and supervision ensure that only qualified persons service the installation.

(C) With Other Circuits. Listed conductive and nonconductive optical fiber cables shall be permitted in the same raceway, cable tray, box, enclosure, or cable routing assembly, with any other listed limited-energy cable.

(D) Support of Optical Fiber Cables. Raceways shall be used for their intended purpose. Optical fiber cables shall not be strapped, taped, or attached by any means to the exterior of any conduit or raceway as a means of support.

Exception: Overhead (aerial) spans of optical fiber cables shall be permitted to be attached to the exterior of a raceway-type mast intended for the attachment and support of such cables.

722.165 Permitted Substitutions of Listed Optical Fiber Cables. The substitutions for optical fiber cables in Table 722.165 and illustrated in Figure 722.165 shall be permitted.

Table 722.165 Permitted Substitutions of Listed Optical Fiber Cable

Cable Type	Permitted Substitutions
OFNP	None
OFCP	OFNP
OFNR	OFNP
OFCR	OFNP, OFCP, OFNR
OFNG, OFN	OFNP, OFNR
OFCG, OFC	OFNP, OFCP, OFNR, OFCR, OFNG, OFN

Figure 722.165 Cable Substitution Hierarchy.

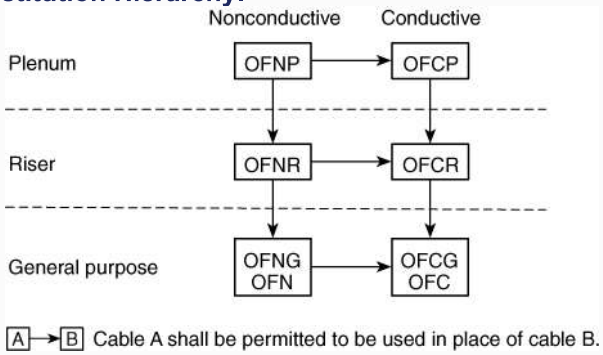

722.171 Wiring Methods and Materials on Load Side of the PLFA Power Source. Fire alarm circuits on the load side of the power source shall be permitted to be installed using wiring methods and materials in accordance with 722.171(A), 722.171(B), or a combination of both. Article 722, Parts I and II shall apply.

(A) PLFA Wiring Methods and Materials. Power-limited fire alarm conductors and cables described in 722.170 shall be installed as detailed in 722.171(B)(1) through 722.171(B)(4), and 722.172.

(1) In Raceways, Exposed on Ceilings or Sidewalls, or Fished in Concealed Spaces. Cable splices or terminations shall be made in listed fittings, boxes, enclosures, fire alarm devices, or utilization equipment. Where installed exposed, cables shall be adequately supported and installed such that maximum protection against physical damage is afforded by building construction such as baseboards, door frames, ledges, and so forth. Where located within 2.1 m (7 ft) of the floor, cables shall be securely fastened in an approved manner at intervals of not more than 450 mm (18 in.).

(2) Passing Through a Floor or Wall. Cables shall be installed in metal raceways or rigid nonmetallic conduit where passing through a floor or wall to a height of 2.1 m (7 ft) above the floor, unless adequate protection can be afforded by building construction such as detailed in 722.171(A)(1) or unless an equivalent solid guard is provided.

(3) Nonconcealed Spaces. Cables covered by Chapter 3 used for wiring of PLFA circuits and installed in nonconcealed spaces shall comply with the following:

(1) The cables shall be installed in accordance with 722.100(A)(15)(a) and 722.100(A)(15)(b).

(2) Exposed portions of the cable shall have a length not exceeding 3 m (10 ft).

(4) Portable Fire Alarm Systems. A portable fire alarm system provided to protect a stage or set when not in use shall be permitted to use wiring methods in accordance with 530.12.

(5) PLFA Wired Using NPLFA Wiring Methods and Materials. NPLFA wiring methods shall be permitted when used in accordance with 760.46, 760.49, or 760.53 for PLFA circuits. Conductors shall be solid or stranded copper. Separation from electric light, power, Class 1, non-power-limited fire alarm circuit conductors, and network-powered broadband communications medium-power cables shall comply with 760.136.

(B) Power-Limited Fire Alarm Conductor Size. Conductors of 26 AWG shall be permitted only where spliced with a connector listed as suitable for 26 AWG to 24 AWG or larger conductors that are terminated on equipment or where the 26 AWG conductors are terminated on equipment listed as suitable for 26 AWG conductors. Single conductors shall not be smaller than 18 AWG.

(C) Support of Conductors. Power-limited fire alarm circuit conductors shall not be strapped, taped, or attached by any means to the exterior of any conduit or other raceway as a means of support.

722.172 Permitted Substitutions for Power-Limited Fire Alarm Cables. The substitutions for fire alarm cables listed in Table 722.172 and illustrated in Figure 722.172 shall be permitted. Where substitute cables are installed, the wiring requirements of Article 760, Parts I and III shall apply.

Informational Note: See 722.100 for information on communications cables (CMP, CMR, CMG, CM).

Table 722.172 Permitted Substitutions for Power-Limited Fire Alarm Cables.

Cable Type	Permitted Substitutions
FPLP	CMP
FPLR	CMP, FPLP, CMR
FPL	CMP, FPLP, CMR, FPLR, CMG, CM

Figure 722.172 Power-Limited Fire Alarm Cable Substitution Hierarchy.

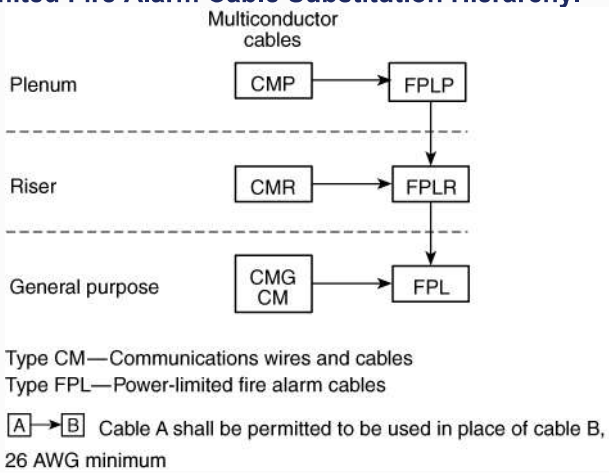

722.180 Circuit Integrity (CI) Cable, Fire-Resistive Cable System, or Electrical Circuit Protective System.

(A) General. CI cable, a fire-resistive cable system, or a listed electrical circuit protective system shall be permitted for use in systems that supply critical circuits to ensure survivability for continued circuit operation for a specified time under fire conditions.

(B) Securing and Supporting. Circuit integrity type CI cable shall be supported at 610 mm (24 in.) maximum intervals in accordance with the following:

(1) Secured to the noncombustible surface of the building structure

(2) Using steel supports and fasteners

722.181 Thermocouple Circuits. Conductors in Type PLTC cables used for Class 2 thermocouple circuits shall be permitted to be any of the materials used for thermocouple extension wire.

722.182 Installation of Circuit Conductors Extending Beyond One Building. Circuit conductors that extend beyond one building and are run such that they are subject to accidental contact with electric light or power conductors operating over 300 volts to ground, or are exposed to lightning on interbuilding circuits on the same premises, shall comply with the following:

(1) For other than coaxial conductors, 750.48, 750.100, 800.44, 800.50, 800.53, 805.170(A), and 805.170(B)

(2) For coaxial conductors, 750.48(B), 750.75, and 800.44

Public Comment No. 1788-NFPA 70-2024 [Article 722]

~~Article 722~~ Article 822 Limited-Energy Cables for Power-Limited Circuits, Fault-Managed-Power Circuits, Optical Fiber Circuits, and Communications Circuits

Part I. General

~~722~~ **822 .1** Scope.

This article covers the general requirements for the installation of single- and multiple-conductor cables used in Class 2 and Class 3 power-limited circuits, power-limited fire alarm (PLFA) circuits, Class 4 fault-managed power circuits, optical fiber cables, and communications systems power-limited, remote-control, and signaling circuits that are not an integral part of a device or utilization equipment installed inside of buildings.

These general requirements also cover cables used in communications systems and apply to communications circuits, data communications, community antenna television and radio distribution systems, network-powered broadband communications systems, and premises-powered broadband communications systems, unless modified by applicable parts of Articles 800, 810, 820, 830, or 840.

Informational Note No. 1: See 206.4 for classifications of remote-control and signaling circuits.

Informational Note No. 2: Class 4 fault-managed power systems consist of a Class 4 power transmitter and a Class 4 power receiver connected by a Class 4 cabling system. These systems are characterized by monitoring the circuit for faults and controlling the source current to ensure the energy delivered into any fault is limited. Class 4 systems differ from Class 1, Class 2, and Class 3 systems in that they are not limited for power delivered to an appropriate load. They are current limited for faults between the Class 4 transmitter and Class 4 receiver.

Informational Note No. 3: The circuits described herein are characterized by usage and electrical power limitations that differentiate them from electric light and power circuits; therefore, alternative requirements are given regarding minimum wire sizes, ampacity adjustment and correction factors, overcurrent protection, installation requirements, and wiring methods and materials.

~~722~~ **822 .4** Other Articles.

In addition to the requirements of this article, installations of limited-energy and communications wires and cables shall also comply with the following:

(1) Class 2 and Class 3 cables: Article 725, Part II and Article 722, Parts I and II

(2) Class 4 cables: Article 726, Part II and IV and Article 722, Parts I and II

(3) Fire alarm cables: Article 760, Part III

(4) Optical fiber cables: Article 770, Part V

(5) Coaxial cables — installations of premises (within buildings) CATV and radio distribution circuits: Article 820, Part V

~~722~~ **822 .12** Uses Not Permitted.

Class 4 cables shall not be permitted for any applications that are not part of a Class 4 system.

Exception: Use of Class 4 cable for other applications shall be permitted if the cable has been listed as suitable for the other applications.

~~722~~ **822 .14** Cables Containing Communications and Power Circuits.

Cables carrying data or communications circuits as well as power circuits shall be classified as electrical power circuits in accordance with the type of electrical power carried.

Exception: PoE circuits shall be permitted to be classified as communications and Class 2 or Class 3.

Informational Note: Communications circuits carrying power in accordance with Article 805, Part II, 820.15, 830.15, or 840.160 are considered according to their appropriate article for each type of circuit.

722.27 Temperature Limitation of Limited-Energy and Communications Cables.

No cable shall be used in such a manner that its operating temperature exceeds that of its rating.

~~722~~ **822 .30** Securing and Supporting.

(A) General.

In addition to the requirements of 720.19 and 720.30, limited-energy and communications cables shall be installed in accordance with 722.30(A)(1) and 722.30(A)(2).

(1) Supporting.

Cables installed exposed on the surface of ceilings and sidewalls shall be supported by the building structure in such a manner that the cable will not be damaged by normal building use.

(2) Securing.

Such cables shall be secured by hardware, including straps, staples, cables ties listed and identified for securement and support, and hangers, or similar fittings designed and installed so as not to damage the cable.

(B) Spaces Used for Environmental Air (Plenums).

Limited-energy and communications cables installed in other spaces used for environmental air (plenums) shall be secured and supported in accordance with 720.30(G).

Part II. Listing and Marking Requirements

~~722~~ **822 .100** Listing of Limited-Energy and Communications Cables.

Cables installed in buildings shall be listed in accordance with 722.100(A)(1) through 722.100(A)(16).

Exception No. 1: Optical fiber cables that are installed in compliance with 722.168 shall not be required to be listed.

Exception No. 2: Cables installed in compliance with 800.48 shall not be required to be listed.

(A) Listing of Cables.

Cables installed as wiring methods within buildings shall be listed as resistant to the spread of fire and other criteria in accordance with 722.100(A)(1) through 722.100(A)(16).

Informational Note No. 1: See UL 13, *Standard for Power-Limited Circuit Cables*, for applicable requirements for listing of Class 2 and Class 3 cable and power-limited tray cable (PLTC).

Informational Note No. 2: See UL 1424, *Cables for Power-Limited Fire-Alarm Circuits*, for applicable requirements for listing of power-limited fire alarm cable.

Informational Note No. 3: See UL 1651, *Optical Fiber Cable*, for applicable requirements for listing of optical fiber cable.

Informational Note No. 4: See UL 1400-2, *Outline for Fault-Managed Power Systems — Part 2: Requirements for Class 4 Cables*, for applicable requirements for listing of Class 4 cable.

(1) Plenum Cable.

Plenum cable shall be listed as suitable for use in ducts, plenums, and other space for environmental air and shall be listed as having adequate fire-resistant and low-smoke producing characteristics. Plenum cable types shall be identified in Table 722.102(A).

Informational Note: See NFPA 262-2023, *Standard Method of Test for Flame Travel and Smoke of Wires and Cables for Use in Air-Handling Spaces*, for the test method used to determine that a cable is low-smoke producing and fire resistant, exhibiting a maximum peak optical density of 0.50 or less, an average optical density of 0.15 or less, and a maximum flame spread distance of 1.52 m (5 ft) or less.

(2) Riser Cable.

Riser cable shall be listed as suitable for use in a vertical run in a shaft or from floor to floor and shall be listed as having fire-resistant characteristics capable of preventing the carrying of fire from floor to floor.

Informational Note: See ANSI/UL 1666-2012, *Test for Flame Propagation Height of Electrical and Optical-Fiber Cable Installed Vertically in Shafts*, for the cable requirements defining fire-resistant characteristics capable of preventing the carrying of fire from floor to floor.

(3) General-Purpose Cable.

General-purpose cable shall be listed as resistant to the spread of fire and as suitable for general-purpose use, except for use in risers, ducts, plenums, and other space used for environmental air.

Informational Note: See UL 2556, *Wire and Cable Test Methods*, for defining *resistant to the spread of fire*. One method is to demonstrate that the cables do not spread fire to the top of the tray in the UL Flame Exposure, Vertical Tray Flame Test. The smoke measurements in the test method are not applicable. A method of defining *resistant to the spread of fire* is for the damage (char length) not to exceed 1.5 m (4 ft 11 in.) when performing the FT4 Vertical Flame Test.

(4) Alternative General-Purpose Cable.

Alternative general-purpose optical fiber cable shall be listed as suitable for general-purpose use, with the exception of risers and plenums, and shall also be resistant to the spread of fire.

Informational Note: See CSA C22.2 No. 0.3-M-2001, *Test Methods for Electrical Wires and Cables*, for the CSA Vertical Flame Test — cables in cable trays, that can also be used to define *resistant to the spread of fire* when the damage (char length) does not exceed 1.5 m (4 ft 11 in.).

(5) Limited-Use Cable.

Limited-use cable shall be listed as suitable for use in dwellings and raceways and shall be listed as resistant to flame spread.

Informational Note: See ANSI/UL 2556, *Standard for Wire and Cable Test Methods*, for one method of determining that cable is resistant to flame spread by testing the cable to the FV-2/VW-1 test.

(6) Type PLTC.

Type PLTC nonmetallic-sheathed, power-limited tray cable shall be listed as being suitable for cable trays, resistant to the spread of fire, and sunlight- and moisture-resistant. Type PLTC cable used in a wet location shall be listed for use in wet locations and marked “wet” or “wet location.”

Informational Note: See ANSI/UL 1685-2010, *Standard for Safety for Vertical-Tray Fire-Propagation and Smoke-Release Test for Electrical and Optical-Fiber Cables*, for the UL Flame Exposure, Vertical Tray Flame Test that is used to determine resistance to the spread of fire when cables do not spread fire to the top of the tray. The smoke measurements in the test method are not applicable. See CSA C22.2 No. 0.3-M-2001, *Test Methods for Electrical Wires and Cables*, for the CSA Vertical Flame Test — cables in cable trays that can also be used to define *resistant to the spread of fire* when the damage (char length) does not exceed 1.5 m (4 ft 11 in.).

(7) Circuit Integrity (CI) Cable, Fire-Resistive Cable System, or Electrical Circuit Protective System.

Cables that are used for survivability of critical circuits under fire conditions shall comply with 722.100(A)(7)(a), 722.100(A)(7)(b), or 722.100(A)(7)(c).

Informational Note: See *NFPA 72*-2025, *National Fire Alarm and Signaling Code*, 12.4.3 and 12.4.4 for additional information on fire alarm CI cable, fire-resistive cable systems, or electrical circuit protective systems used for fire alarm circuits to comply with the survivability requirements to maintain the circuit’s electrical function during fire conditions for a defined period of time.

(a) *CI Cables.* CI cables of the types specified in 722.100(A)(1), 722.100(A)(2), 722.100(A)(3), 722.100(A)(4), and 722.100(A)(6) and used for survivability of critical circuits shall be marked with the additional classification using the suffix “CI.” To maintain its listed fire-resistive rating, CI cable shall only be installed in free air in accordance with 722.180(B). CI cables shall only be permitted to be installed in a raceway where specifically listed and marked as part of a fire-resistive cable system as covered in 722.100(A)(7)(b).

Informational Note: See UL 2196, *Fire Test for Circuit Integrity of Fire-Resistive Power, Instrumentation, Control and Data Cables*, and UL 1425, *Cables for Non–Power-Limited Fire-Alarm Circuits*, for information on establishing a rating for CI cable. The *UL Guide Information for Nonpower-limited Fire Alarm Circuits (HNHT)* contains information to identify the cable and its installation limitations to maintain the fire-resistive rating.

(b) *Fire-Resistive Cables.* Fire-resistive cables of the types specified in 722.100(A)(1), 722.100(A)(2), 722.100(A)(3), 722.100(A)(4), 722.100(A)(6), and 722.100(A)(7)(a) that are part of a fire-resistive cable system shall be identified with the system identifier and hourly rating marked on the protectant or the smallest unit container and installed in accordance with the listing of the system.

Informational Note: See UL 2196, *Fire Test for Circuit Integrity of Fire-Resistive Power, Instrumentation, Control and Data Cables*, for information on establishing a rating for a fire-resistive cable system. The *UL Guide Information for Electrical Circuit Integrity Systems (FHIT)* contains information to identify the system and its installation limitations to maintain a minimum fire-resistive rating.

(c) *Electrical Circuit Protective System.* Protectants for cables of the types specified in 722.100(A)(1), 722.100(A)(2), 722.100(A)(3), 722.100(A)(4), and 722.100(A)(6) that are part of an electrical circuit protective system shall be identified with the protective system identifier and hourly rating marked on the protectant or the smallest unit container and installed in accordance with the listing of the protective system.

Informational Note: See UL 1724, *Fire Tests for Electrical Circuit Protective Systems*, for information on establishing a rating for an electrical circuit protective system. The *UL Guide Information for Electrical Circuit Integrity Systems (FHIT)* contains information to identify the system and its installation limitations to maintain the fire-resistive rating.

(8) Class 3 Single Conductors.

Class 3 single conductors used as other wiring within buildings shall be listed Type CL3 and shall not be smaller than 18 AWG.

Informational Note: See ANSI/UL 1685-2010, *Standard for Safety for Vertical-Tray Fire-Propagation and Smoke-Release Test for Electrical and Optical-Fiber Cables*, for the UL Flame Exposure, Vertical Tray Flame Test that is used to determine resistance to the spread of fire when cables do not spread fire to the top of the tray. The smoke measurements in the test method are not applicable. See CSA C22.2 No. 0.3-M-2001, *Test Methods for Electrical Wires and Cables*, for the CSA Vertical Flame Test — cables in cable trays that can also be used to define *resistant to the spread of fire* when the damage (char length) does not exceed 1.5 m (4 ft 11 in.).

(9) Limited Power (LP) Cable.

Class 2 and Class 3 LP cables shall be listed as suitable for carrying power and data up to a specified current limit for each conductor without exceeding the temperature rating of the cable. The cables shall be marked with the suffix "-LP (XXA)" where XXA designates the current limit in amperes per conductor.

Informational Note: An example of the marking on 23 AWG, 4-pair, Class 2 cable rated 75°C (167°F) with an LP current rating of 0.6 amperes per conductor is "CL2-LP (0.6A) 75°C 23 AWG 4-pair."

(10) Under-Carpet Cables.

Under-carpet cable shall be listed as suitable for use under carpet, floor covering, modular tiles, and planks.

Informational Note: See UL 444, *Standard for Safety for Communications Cables*, for the compressive loading test used to determine the suitability of cable for under-carpet use.

(11) Wet Locations.

Cable used in a wet location shall be listed for use in wet locations and be marked "wet" or "wet location" or have a moisture-impervious metal sheath.

(12) Field-Assembled Optical Fiber Cables.

Field-assembled optical fiber cable shall comply with 722.100(A)(12)(a) through 722.100(A)(12)(d).

(a) The specific combination of jacket and optical fibers intended to be installed as a field-assembled optical fiber cable shall be one of the types in 722.100(A)(1), 722.100(A)(2), or 722.100(A)(3) and shall be marked in accordance with Table 722.102(A).

(b) The jacket of a field-assembled optical fiber cable shall have a surface marking indicating the specific optical fibers with which it is identified for use.

(c) The optical fibers shall have a permanent marking, such as a marker tape, indicating the jacket with which they are identified for use.

(d) The jacket without fibers shall meet the listing requirements for communications raceways in 722.110 and 722.111 in accordance with the cable marking.

(13) Cables Containing Optical Fibers.

Composite optical fiber cables shall be listed as electrical cables based on the type of electrical conductors.

(14) Class 2 and Class 3 Cable Voltage and Temperature Ratings.

Class 2 cables shall have a voltage rating of not less than 150 volts. Class 3 cables shall have a voltage rating of not less than 300 volts. Class 2 and Class 3 cables shall have a temperature rating of not less than 60°C (140°F).

(15) Power-Limited Fire Alarm (PLFA) Cables.

PFLA cables shall comply with 722.100(A)(15)(a) through 722.100(A)(15)(d).

(a) Conductors for cables, other than coaxial cables, shall be solid or stranded copper. Coaxial cables shall be permitted to use 30 percent conductivity copper-covered steel center conductor wire.

(b) The size of conductors in a multiconductor cable shall not be smaller than 26 AWG. Single conductors shall not be smaller than 18 AWG. Conductors of 26 AWG shall be permitted only where spliced with a connector listed as suitable for 26 AWG to 24 AWG or larger conductors that are terminated on equipment or where the 26 AWG conductors are terminated on equipment listed as suitable for 26 AWG conductors.

(c) Cables shall have a voltage rating of not less than 300 volts. (d) Cables shall have a temperature rating of not less than 60°C (140°F).

(16) Class 4 Cable Construction.

(a) *Sizes.* Conductors of sizes not smaller than 24 AWG shall be permitted to be used.

(b) *Insulation.* Insulation on conductors shall be rated not less than 450 volts dc.

(c) *Voltage Rating.* Cables shall have a voltage rating of not less than 450 volts dc. Voltage ratings shall not be marked on the cables.

(d) *Temperature Rating.* Cables shall have a temperature rating of not less than 60°C (140°F).

722.102 Marking of Listed Limited-Energy and Communications Cables.

(A) General.

Cables installed in buildings shall be marked in accordance with 722.102(A), and they shall be permitted to be marked in accordance with 722.102(B).

Cables shall be durably marked on the surface in accordance with the following:

(1) The AWG size or circular mil area shall be repeated at intervals not exceeding 610 mm (24 in.).

(2) All other markings shall be repeated at intervals not exceeding 1.0 m (40 in.).

(3) The proper type designation for the type of cable shall be marked in accordance with Table 722.102(A).

(4) The manufacturer's name, trademark, or other distinctive marking by which the organization responsible for the product can be readily identified shall be marked.

(5) The AWG size or circular mil area shall be marked.

Informational Note No. 1: See Chapter 9, Table 8 for conductor area expressed in SI units for conductor sizes specified in AWG or circular mil area.

(6) The temperature rating for a temperature rating exceeding 60°C (140°F) shall be marked.

Informational Note No. 2: A minimum temperature rating of 60°C (140°F) is assumed for cables not marked with a temperature rating.

(7) Voltage ratings shall not be marked on the cables.

Exception: Voltage markings shall be permitted where the cable has multiple listings, and a voltage marking is required for one or more of the listings.

Informational Note No. 3: Voltage markings on cables could be misinterpreted to suggest that the cables may be suitable for Class 1 electric light and power applications.

Informational Note No. 4: Cable types are listed in descending order of fire resistance rating.

Table 722.102(A) Cable Type Markings

Cable Type	Cable Marking
Class 4 plenum cable	CL4P
Class 3 plenum cable	CL3P
Class 2 plenum cable	CL2P
Power-limited fire alarm plenum cable	FPLP
Nonconductive optical fiber plenum cable	OFNP
Conductive optical fiber plenum cable	OFCP
Class 4 riser cable	CL4R
Class 3 riser cable	CL3R
Class 2 riser cable	CL2R
Power-limited fire alarm riser cable	FPLR
Nonconductive optical fiber riser cable	OFNR
Conductive optical fiber riser cable	OFCR
Class 4 general-purpose cable	CL4
Class 3 general-purpose cable	CL3
Class 2 general-purpose cable	CL2
Class 4 outdoor-only use cable	CL4Z
Power-limited fire alarm cable	FPL
Nonconductive general-purpose optical fiber cable	OFN
Conductive general-purpose optical fiber cable	OFC
Alternative nonconductive general-purpose optical fiber cable	OFNG
Alternative conductive general-purpose optical fiber cable	OFCG
Class 3 cable — limited use	CL3X
Class 2 cable — limited use	CL2X
Under-carpet cable	CMUC

Note: All types of CL2, CL3, CL4, and FPL cables containing optical fibers are provided with the suffix "-OF."

(B) Optional Markings.

Cables shall be permitted to be surface marked to indicate special characteristics of the cable materials.

Informational Note No. 1: Examples of these characteristics include, but are not limited to, limited smoke, halogen free, low smoke and halogen free, and sunlight resistant.

Informational Note No. 2: Some examples of optional markings are ST1 to indicate limited smoke characteristics. See UL 2556, *Wire and Cable Test Methods*, HF to indicate halogen free. See in UL 2885, *Outline of Investigation for Acid Gas, Acidity and Conductivity of Combusted Materials*, and LSHF to indicate halogen free and low-smoke characteristics. See IEC 61034-2, *Measurement of smoke density of cables burning under defined conditions — Part 2: Test procedure and requirements*.

Part III. Wiring Methods, Applications and Installations Inside Buildings

~~722~~ 822 .110 Application and Installation of Raceways, Cable Routing Assemblies, and Cable Trays.

(A) Application of Listed Communications Raceways in Buildings.

Permitted and nonpermitted applications of listed communications raceways shall be in accordance with Table 722.110(A).

Table 722.110(A) Applications of Listed Communications Raceways in Buildings.

Applications		Listed Communications Raceway Type		
		Plenum	Riser	General-Purpose
In ducts specifically fabricated for environmental air as described in 720.22(B)	In fabricated ducts	N	N	N
	In metal raceway that complies with 300.25(B)	N	N	N
In other spaces used for environmental air (plenums) as described in 720.22(C)	In other spaces used for environmental air	Y	N	N
	-	In metal raceway that complies with 300.25(C)	Y	Y
	-	In plenum cable routing assemblies	N	N
	-	Supported by open metal cable trays	Y	N
	-	Supported by solid bottom metal cable trays with solid metal covers	Y	Y
In risers	In vertical runs	Y	Y	N
	In metal raceways	Y	Y	Y
	In fireproof shafts	Y	Y	Y
	In plenum cable routing assemblies	N	N	N
	In riser cable routing assemblies	N	N	N
	In one- and two-family dwellings	Y	Y	Y
Within buildings in other than air-handling spaces and risers	General	Y	Y	Y
	In one- and two-family dwellings	Y	Y	Y
	In multifamily dwellings	Y	Y	Y
	In nonconcealed spaces	Y	Y	Y
	Supported by cable trays	Y	Y	Y
	Under carpet, modular flooring, and planks	N	N	N
	In distributing frames and cross-connect arrays	Y	Y	Y
	In any raceway recognized in Chapter 3	Y	Y	Y
	In plenum cable routing assemblies	N	N	N
	In riser cable routing assemblies	N	N	N
	In general-purpose cable routing assemblies	N	N	N

Note: An “N” in the table indicates that the communications raceway type shall not be installed in the application. A “Y” indicates that the communications raceway type shall be permitted to be installed in the application, subject to the limitations described in 722.111 and 722.131.

(B) Application of Listed Cable Routing Assemblies.

Permitted and nonpermitted applications of listed cable routing assemblies shall be in accordance with Table 722.110(B).

Table 722.110(B) Applications of Listed Cable Routing Assemblies in Buildings.

Applications		Listed Cable Routing Assembly Type		
		Plenum	Riser	General-Purpose
In ducts specifically fabricated for environmental air as described in 720.22(B)	In fabricated ducts	N	N	N
	In metal raceway that complies with 300.25(B)	N	N	N
In other spaces used for environmental air (plenums) as described in 720.22(C)	In other spaces used for environmental air	Y	N	N
	In metal raceway that complies with 300.25(C)	Y	Y	Y
	-	In plenum cable routing assemblies	N	N	N
	-	Supported by open metal cable trays	Y	N	N
	-	Supported by solid bottom metal cable trays with solid metal covers	Y	Y	Y
In risers	In vertical runs	Y	Y	N
	-	In metal raceways	Y	Y	Y
	-	In fireproof shafts	Y	Y	Y
	-	In plenum cable routing assemblies	N	N	N
	In riser cable routing assemblies	N	N	N
	-	In one- and two-family dwellings	Y	Y	Y
Within buildings in other than air-handling spaces and risers	General	Y	Y	Y
	In one- and two-family dwellings	Y	Y	Y
	In multifamily dwellings	Y	Y	Y
	In nonconcealed spaces	Y	Y	Y
	Supported by cable trays	Y	Y	Y
	Under carpet, modular flooring, and planks	N	N	N
	In distributing frames and cross-connect arrays	Y	Y	Y
	In any raceway recognized in Chapter 3	Y	Y	Y
	In plenum cable routing assemblies	N	N	N

Applications		Listed Cable Routing Assembly Type		
		Plenum	Riser	General-Purpose
	In riser cable routing assemblies	N	N	N
	In general-purpose cable routing assemblies	N	N	N

Note: An “N” in the table indicates that the cable routing assembly type shall not be installed in the application. A “Y” indicates that the cable routing assembly type shall be permitted to be installed in the application subject to the limitations described in 722.131.

~~722~~ 822 .111 Installation of Raceways, Cable Routing Assemblies, and Cable Trays.

(A) Types of Raceways.

Wires and cables shall be permitted to be installed in raceways that comply with 722.111(A)(1), 722.111(A)(2), or 722.111(A)(3). Medium-power network-powered broadband communications cables shall not be installed in raceways that comply with 722.111(A)(2).

(1) Permitted Raceways.

Wires and raceways shall be permitted to be in any raceway included in Chapter 3. The raceways shall be installed in accordance with Chapter 3.

(2) Communications Raceways.

Wires and cables shall be permitted to be installed in plenum communications raceways, riser communications raceways, and general-purpose communications raceways selected in accordance with Table 722.110(A), listed in accordance with 722.110(A), and installed in accordance with 722.131 and 362.24 through 362.56, where the requirements applicable to electrical nonmetallic tubing (ENT) apply.

(3) Innerduct for Communications Wires and Cables, Coaxial Cables, or Network-Powered Broadband Communications Cables.

Listed plenum communications raceways, listed riser communications raceways, and listed general-purpose communications raceways selected in accordance with Table 722.110(A) shall be permitted to be installed as innerduct in any type of listed raceway permitted in Chapter 3.

(4) Raceway Fill.

The raceway fill requirements of 720.6(B)(1) shall apply to medium-power network-powered broadband communications cables.

(5) Permitted Substitutions.

Substitutions of listed communications raceways shall be permitted in accordance with Table 722.111(A)(5).

Table 722.111(A)(5) Permitted Substitutions of Listed Communications Raceways

Raceway Type	Permitted Substitution
Riser communications raceway	Plenum communications raceway
General purpose communications raceway	Plenum communications raceway, riser communications raceway

(B) Cable Routing Assemblies.

Cables shall be permitted to be installed in plenum cable routing assemblies, riser cable routing assemblies, and general-purpose cable routing assemblies selected in accordance with Table 722.110(B), listed in accordance with 722.110(B), and installed in accordance with 722.111(B)(1), 722.111(B)(2), and 722.131.

(1) Horizontal Support.

Cable routing assemblies shall be supported where run horizontally at intervals not to exceed 900 mm (3 ft) and at each end or joint, unless listed for other support intervals. In no case shall the distance between supports exceed 3 m (10 ft).

(2) Vertical Support.

Vertical runs of cable routing assemblies shall be supported at intervals not exceeding 1.2 m (4 ft), unless listed for other support intervals, and shall not have more than one joint between supports.

(3) Permitted Substitutions.

Substitutions of listed cable routing assemblies shall be permitted in accordance with Table 722.111(B)(3).

Table 722.111(B)(3) Permitted Substitutions of Listed Communications Raceways

Raceway Type	Permitted Substitution
Riser communications raceway	Plenum communications raceway
General purpose communications raceway	Plenum communications raceway, riser communications raceway

(C) Cable Trays.

Wires and cables and communications raceways shall be permitted to be installed in metal or listed nonmetallic cable tray systems. Ladder cable trays shall be permitted to support cable routing assemblies.

~~722~~ 822 .112

Table 722.112 Limited-Energy Cable Type

Plenum limited-energy cables	CMP	Communications plenum cables	
	CATVP	Community antenna television plenum cables	
	BLP	Network-powered broadband communications low-power plenum cables	
	FPLP	Power-limited fire alarm plenum cables	
	CL4P	Class 4 plenum cables	
	CL3P	Class 3 plenum cables	
	CL2P	Class 2 plenum cables	
	OFNP	Nonconductive optical fiber plenum cables	
	OFCP	Conductive optical fiber plenum cables	
Riser limited-energy cables	CMR	Communications riser cables	
	-	CATVR	Community antenna television riser cables
		BLR	Network-powered broadband communications low-power riser cables
		FPLR	Power-limited fire alarm riser cables
		CL4R	Class 4 riser cables
		CL3R	Class 3 riser cables
		CL2R	Class 2 riser cables
		OFNR	Nonconductive optical fiber riser cables
		OFCR	Conductive optical fiber riser cables
General-purpose limited-energy cables	CMG, CM	Communications general-purpose cables	
	-	CATV	Community antenna television general-purpose cables
		BL	Network-powered broadband communications low-power general-purpose cables
		FPL	Power-limited fire alarm general-purpose cables
		CL4	Class 4 general-purpose cables
		PLTC	Power-limited tray cables
		CL3	Class 3 general-purpose cables
		CL2	Class 2 general-purpose cables
		OFNG, OFN	Nonconductive optical fiber general-purpose cables
		OFCG, OFC	Conductive Optical Fiber general-purpose cables
Limited-use limited-energy cables	CMX	Communications limited use cables	
	-	CATVX	Community antenna television limited use cables
		BLX	Network-powered broadband communications low-power limited use cables
		CL3X	Class 3 limited use cables
		CL2X	Class 2 limited use cables
Specialty use limited-energy cables	CMUC	Under-carpet communications wires and cables	

(A) General.

Unless prohibited by this section, plenum, riser, general-purpose, and limited-use limited-energy cables shall be permitted to be installed in the same raceway, cable tray, box, enclosure, or cable routing assembly. Installations shall comply with 722.112(B) through 722.112(H).

(B) Two or More Class 2, Class 3, or Class 4 Circuits.

Conductors of two or more limited energy circuits of the same class shall be permitted within the same limited energy cable.

(C) (C) Class 2, Class 3, and Class 4 Circuits with the Same Limited Energy Cable.

(1) Class 3 Cables.

Class 2 circuits shall be permitted to use listed Class 3 cables.

(2) Dual-Listed Class 3/Class 4 Cables.

Class 2 and Class 3 circuits shall be permitted to use dual-listed Class 3/Class 4 cables.

(D) Class 2 and Class 3 Circuits with Communications Circuits.

(1) Communications Cables.

Conductors of one or more Class 2 or Class 3 circuits shall be permitted in the same cable with conductors of communications circuits. The cable shall be listed as a communications cable.

(2) Composite Cables.

Cables constructed of individually listed Class 2, Class 3, and communications cables under a common jacket shall be permitted to be classified and listed as communications cables. The fire resistance rating of the composite cable shall be determined by the combustion characteristics of the composite cable.

(E) Class 2, Class 3, or Class 4 Cables with Other Limited Energy Cables.

(1) Limited-Use Cables.

Plenum, riser, general-purpose, and limited use limited energy cables shall be permitted in the same enclosure or raceway.

(2) Other Than Limited-Use Cables.

Plenum, riser, and general-purpose limited energy cables shall be permitted in the same enclosure, cable tray, raceway, or cable routing assembly.

(F) Power-Limited Fire Alarm Circuits.

(1) Multiple PLFA Circuits.

Cable and conductors of two or more power-limited fire alarm circuits shall be permitted within the same cable, enclosure, cable tray, raceway, or cable routing assembly.

(2) With Network-Powered Broadband.

Low-power network-powered broadband communications circuits shall be permitted in the same enclosure, cable tray, raceway, or cable routing assembly with PLFA cables.

(3) With Class 2 Circuits.

Conductors of one or more Class 2 circuits shall be permitted within the same cable, enclosure, cable tray, raceway, or cable routing assembly with conductors of power-limited fire alarm circuits if the insulation of the Class 2 circuit conductors in the cable, enclosure, raceway, or cable routing assembly is at least that required by the power-limited fire alarm circuits.

(4) With Class 3 or Communications Circuits.

Cable and conductors of Class 3 and communications circuits shall be permitted within the same cable, enclosure, cable tray, raceway, or cable routing assembly with cables and conductors of power-limited fire alarm circuits.

(5) With 4 Circuits.

Class 4 circuits shall be permitted in the same cable with power-limited fire alarm circuits if the cable is dual-listed.

(6) Audio System Circuits and PLFA Circuits.

Audio system circuits described in 640.9(C) and installed using Class 2, Class 3, or Class 4 wiring methods in compliance with 722.136 shall not be installed in the same cable, cable tray, raceway, or cable routing assembly with PLFA circuits or cables.

(G) Manholes.

Outside plant communications, CATV, and optical fiber cables shall be permitted to be installed together in manholes.

Informational Note: See IEEE C2-2023, *National Electrical Safety Code,* Rules 323 and 341 for information on cable installation in manholes.

(H) Limited-Use and Under-Carpet Limited-Energy Cables.

Limited-use and under-carpet limited-energy cables shall not be installed in cable trays or cable routing assemblies.

722.113 Limited-Energy Circuits with Electric Light, Power, Class 1, Non-Power-Limited Fire Alarm, and Medium-Power Network-Powered Broadband Communications Circuits in Raceways, Compartments, and Boxes.

Separation shall be provided in accordance with 722.112(A) for limited energy cables and conductors, except as provided in 722.164 for optical fiber cables.

(A) General.

Limited energy cables shall be separated by at least 50 mm (2 in.) from conductors of any electric light, power, Class 1, non-power-limited fire alarm, or medium-power network-powered broadband communications circuits and shall not be placed the same raceway, compartment, enclosure, manhole, outlet box, device box, or similar, unless permitted by the 722.113(A)(1) through 722.113(A)(10).

Exception: Low-power and medium-power network-powered broadband communications circuit cables shall be permitted in the same raceway, cable tray, box, enclosure, or cable routing assembly.

(1) Separated by Barriers.

Limited energy cables shall be permitted to be placed in any raceway, compartment, outlet box, junction box, or other enclosure with conductors of electric light, power, Class 1, non-power-limited fire alarm, or medium-power network-powered broadband communications circuits if the conductors of electric light, power, Class 1, non-power-limited fire alarm, and medium-power network-powered broadband communications circuits are separated from the limited energy and cables by a permanent barrier that maintains the 50 mm (2 in.) separation or a listed divider.

(2) Raceways Within Enclosures.

Limited energy cables shall be permitted to share the same enclosure with other systems if the limited energy cables are separated by a raceway within the enclosure.

(3) Associated Systems Within Enclosures.

Limited energy cables shall be permitted to be placed in outlet boxes, junction boxes, compartments, or similar with power conductors where such conductors are introduced solely for power supply to the limited energy equipment and 722.113(A)(3)(a) or 722.113(A)(3)(b) applies.

(a) The power circuit conductors shall be routed within the enclosure to maintain a minimum 6 mm (0.25 in.) separation from the limited energy cables.

(b) The circuit conductors operate at 150 volts or less to ground and the limited energy circuit conductors shall be either of the following:

(3) <u>Installed as a Class 1 circuit</u>

(4) <u>A limited energy cable of CL3, CL3R, CL3P or a permitted substitute and the conductors that emerge from the cable jacket are separated by a minimum 6 mm (0.25 in.) or by a nonconductive barrier from all other conductors</u>

(4) Enclosures with Single Opening.

Circuit conductors of limited energy cables entering compartments, enclosures, device boxes, outlet boxes, or similar shall be permitted to be installed with Class 1, non-power-limited fire alarm, and medium-power network-powered broadband communications circuits where they are introduced solely to connect the equipment connected to the limited energy circuits. If the limited energy circuit conductors must enter an enclosure that is provided with a single opening, they shall be permitted to enter through a single fitting (such as a tee) if the conductors are separated from the conductors of the other circuits by a continuous and firmly fixed nonconductor, such as flexible tubing.

(5) Elevators.

(a) *Traveling Cables*. Separation of circuits shall not be required in elevator traveling cables constructed in accordance with 620.36.

(b) *Hoistways*. In hoistways, cables shall be installed in rigid metal conduit, rigid nonmetallic conduit, intermediate metal conduit, liquidtight flexible nonmetallic conduit, or electrical metallic tubing. For elevators or similar equipment, these conductors shall be permitted to be installed as provided in 620.21.

(6) In Raceways or Cables.

Separation shall not be required if either of the following applies:

(a) The conductors of electric light, power, Class 1, non-power-limited fire alarm, and medium-power network-powered broadband communications circuits are in a raceway or in metal-sheathed, metal-clad, nonmetallic-sheathed, Type AC or Type UF cables.

(b) The limited energy cable conductors are installed in a raceway or in metal-sheathed, metal-clad, nonmetallic-sheathed, Type TC, or Type UF cables.

(7) Protected by Firmly Fixed Nonconductors.

Separation shall not be required if the limited energy cables are permanently separated from the conductors of electric light, power, Class 1, non-power-limited fire alarm, and medium-power network-powered broadband communications circuits by a continuous and firmly fixed nonconductor, such as porcelain tubes or flexible tubing, in addition to the insulation on the wire.

(8) Manholes.

Underground limited energy circuit conductors and cables in a manhole shall be permitted to be installed with Class 1, non-power-limited fire alarm, and medium-power network-powered broadband communications circuits if one of the following conditions is met:

(1) The electric light, power, Class 1, non-power-limited fire alarm, and medium-power network-powered broadband communications circuit conductors are in a metal-enclosed cable or Type UF cable.

(2) The limited energy circuit conductors are permanently and effectively separated from the conductors of other circuits by a continuous and firmly fixed nonconductor, such as flexible tubing, in addition to the insulation or covering on the wire.

(3) The limited energy circuit conductors are permanently and effectively separated from conductors of the other circuits and securely fastened to racks, insulators, or other approved supports.

(9) Cable Trays.

Limited energy circuit conductors shall be permitted to be installed in cable trays if the conductors of the electric light, Class 1, and non-power-limited fire alarm circuits are separated by a solid fixed barrier of a material compatible with the cable tray or if the limited energy circuits are installed in Type MC cable.

(10) If Protected.

Limited energy circuits shall be permitted to be installed together with the conductors of electric light, power, Class 1, non-power-limited fire alarm, and medium-power network-powered broadband communications circuits if they are functionally associated and installed using Class 1 wiring methods in accordance with 724.46.

~~722~~ 822 .120 Application and Installation of Limited Energy Cables in Buildings.

The application and installation of limited-energy cables shall comply with Table 722.120.

Table 722.120 Applications of Limited-Energy Cables

Applications		Cable Type[1]						
		Plenum	Riser	General-Purpose	Limited-Use	Under Carpet	PLTC	
In ducts specifically fabricated for environmental air as described in 720.22(C)[2]	Cables in lengths as short as practicable to perform the required function	Y	N	N	N	N	N	
	In metal raceway that complies with 720.22(B)	Y	Y	Y	Y	N	Y	
In other spaces used for environmental air (plenums) as described in 720.22(C)	Cables in other spaces used for environmental air	Y	N	N	N	N	N	
	Cables in metal raceway that complies with 720.22(C)	Y	Y	Y	Y	N	Y	
	Cables in plenum communications raceways	Y	N	N	N	N	N	
	-	Cables in plenum cable routing assemblies	Y	N	N	N	N	N
	-	Cables supported by open metal cable trays	Y	N	N	N	N	N
	-	Cables, or cables installed in raceways or cable routing assemblies supported by solid bottom metal cable trays with solid metal covers	Y	Y	Y	Y	N	Y
In risers and vertical runs	Cables in vertical runs penetrating one or more floors and in vertical runs in a shaft	Y	Y	N	N	N	N	
	-	Cables in metal raceways	Y	Y	Y	Y	N	Y
	-	Cables in fireproof shafts	Y	Y	Y	N	N	Y
	-	Cables in plenum communications raceways	Y	Y	N	N	N	N
	-	Cables in plenum cable routing assemblies	Y	Y	N	N	N	N
	-	Cables in riser communications raceways	Y	Y	N	N	N	N
	-	Cables in riser cable routing assemblies	Y	Y	N	N	N	N
	-	Cables in one- and two-family dwellings	Y	Y	Y	Y[3]	N	Y
Cables and innerducts installed in metal raceways in a riser having firestops at each floor[2]	Cables	Y	Y	Y	Y	N	Y	
	Cables in plenum communications raceways (innerduct)	Y	Y	Y	Y	N	Y	
	Cables in riser communications raceways (innerduct)	Y	Y	Y	Y	N	Y	
	Cables in general-purpose communications raceways (innerduct)	Y	Y	Y	Y	N	Y	
In fireproof riser shafts having firestops at each floor[2]	Cables	Y	Y	Y	N	N	Y	
	Cables in plenum communications raceways or plenum cable routing assemblies	Y	Y	Y	N	N	Y	
	Cables in riser communications raceways or riser cable routing assemblies	Y	Y	Y	N	N	Y	
	-	Cables in general-purpose communications raceways or general-purpose cable routing assemblies	Y	Y	Y	N	N	Y
In cable trays	Outdoors	N	N	N	N	N	Y	
	Cables, or cables in plenum, riser, or general-purpose communications raceways, installed indoors	Y	Y	Y	N	N	Y	
In cross-connect arrays	Cables, and cables in plenum, riser, or general-purpose communications raceways or cable routing assemblies	Y	Y	Y	N	N	Y	
In one-, two-, and multifamily dwellings, and in building locations other than the locations covered above	Cables	Y	Y	Y	Y[3]	N	Y	
	Cables in plenum, riser, or general-purpose communications raceways or cable routing assemblies, or raceways recognized in Chapter 3	Y	Y	Y	Y	N	Y	
	-	Cables in nonconcealed spaces	Y	Y	Y	Y[4]	Y	Y
	-	Under carpet, floor covering, modular flooring, and planks	N	N	N	N	Y	N

[1]"N" indicates that the cable type shall not be installed in the application. "Y" indicates that the cable type shall be permitted to be installed in the application, subject to any limitations described in this article or the articles described in 722.4(C).

[2]In 720.22(B), cables shall be permitted in ducts specifically fabricated for environmental air only if directly associated with the air distribution system.

[3]Limited-use cable shall be permitted to be installed only in one-, two-, and multifamily dwellings and only if the cable is smaller in diameter than 6.35 mm (0.25 in.).

[4]The exposed length of cable shall not exceed 3.05 m (10 ft).

~~722~~ 822 .121 Installations.

(A) Industrial Establishments.

In industrial establishments where the conditions of maintenance and supervision ensure that only qualified persons service the installation, Type PLTC cable shall be permitted in accordance with either of the following:

(1) Where the cable is not subject to physical damage, Type PLTC cable that complies with the crush and impact requirements of Type MC cable and is identified as Type PLTC-ER for such use shall be permitted to be exposed between the cable tray and the utilization equipment or device. The cable shall be continuously supported and protected against physical damage using mechanical protection such as dedicated struts, angles, or channels. The cable shall be supported and secured at intervals not exceeding 1.8 m (6 ft). Where not subject to physical damage, Type PLTC-ER cable shall be permitted to transition between cable trays and between cable trays and utilization equipment or devices for a distance not to exceed 1.8 m (6 ft) without continuous support. The cable shall be mechanically supported where exiting the cable tray to ensure that the minimum bending radius is not exceeded.

(2) Type PLTC cable, with a metallic sheath or armor in accordance with 722.100(A)(6), shall be permitted to be installed exposed. The cable shall be continuously supported and protected against physical damage using mechanical protection such as dedicated struts, angles, or channels. The cable shall be secured at intervals not exceeding 1.8 m (6 ft).

~~722~~ 822 .122 Limited-Energy Cable Substitutions.

The substitutions for cables listed in Table 722.120 and illustrated in Figure 722.122 shall be permitted. Where substitute cables are installed, the installation requirements of the articles described in 722.4 shall also apply. CI cables shall be permitted to be installed to provide 2-hour circuit integrity. See 722.180(A).

Informational Note: See 722.100 for information on Types CMP, CMR, CM, and CMX.

Table 722.122 Permitted Limited-Energy Cable Substitutions

Cable Type	Permitted Substitutions
CL3P	CMP
CL2P	CMP, CL3P
CL3R	CMP, CL3P, CMR
CL2R	CMP, CL3P, CL2P, CMR, CL3R
PLTC	None
CL3	CMP, CL3P, CMR, CL3R, CMG, CM, PLTC
CL2	CMP, CL3P, CL2P, CMR, CL3R, CL2R, CMG, CM, PLTC, CL3
CL3X	CMP, CL3P, CMR, CL3R, CMG, CM, PLTC, CL3, CMX
CL2X	CMP, CL3P, CL2P, CMR, CL3R, CL2R, CMG, CM, PLTC, CL3, CL2, CMX, CL3X
FPLP	CMP
FPLR	CMP, FPLP, CMR
FPL	CMP, FPLP, CMR, FPLR, CMG, CM
OFNP	None
OFCP	OFNP
OFNR	OFNP
OFCR	OFNP, OFCP, OFNR
OFNG, OFN	OFNP, OFNR
OFCG, OFC	OFNP, OFCP, OFNR, OFCR, OFNG, OFN
CMUC	None

Figure 722.122 Limited-Energy and Communications Cable Substitution Hierarchy.

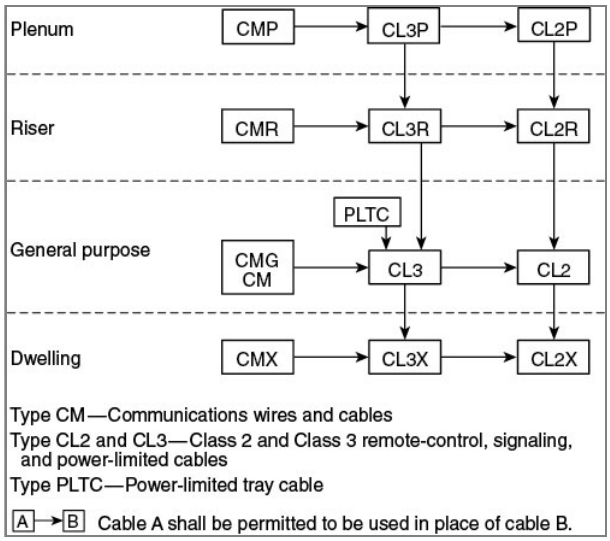

~~722~~ 882 .130 Application of Cables Used for Communications Circuits, Communications Wires, Cables, and Raceways and Listed Cable Routing Assemblies.

Permitted and nonpermitted applications of listed communications wires and cables, coaxial cables, network-powered broadband communications system cables shall be in accordance with Table 722.130.

The permitted applications shall be subject to the installation requirements of 722.110.

Table 722.130 Applications of Listed Communications Wires, Cables, Listed CATV-Type Coaxial Cables, and Listed Network-Powered Broadband Communications Cables in Buildings

Applications		Wire and Cable Type									
		Plenum	Riser	BMR	General-Purpose	BM	Limited-Use	Under-carpet	BMU, BLU	Hybrid Power and Communications Cables	Communications Wires
In ducts specifically fabricated for environmental air as described in 720.22(B)	In fabricated ducts	Y	N	N	N	N	N	N	N	N	N
	In metal raceway that complies with 720.22(B)	Y	Y	Y	Y	Y	Y	N	N	N	Y
In other spaces used for environmental air (plenums) as described in 720.22(C)	In other spaces used for environmental air	Y	N	N	N	N	N	N	N	N	N
	In metal raceway that complies with 720.22(C)	Y	Y	Y	Y	Y	Y	N	N	N	Y
	-	In plenum communications raceways	Y	N	N	N	N	N	N	N	N	N
	-	In plenum cable routing assemblies	Y	N	N	N	N	N	N	N	N	N
	-	Supported by open metal cable trays	Y	N	N	N	N	N	N	N	N	N
	-	Supported by solid bottom metal cable trays with solid metal covers	Y	Y	Y	Y	Y	Y	N	N	N	N
In risers	In vertical runs	Y	Y	Y	N	N	N	N	N	N	N
	-	In metal raceways	Y	Y	Y	Y	Y	Y	N	N	N	N
	-	In fireproof shafts	Y	Y	Y	Y	Y	Y	N	N	N	N
	-	In plenum communications raceways	Y	Y	N	N	N	N	N	N	N	N
	-	In plenum cable routing assemblies	Y	Y	N	N	N	N	N	N	N	N
	-	In riser communications raceways	Y	Y	N	N	N	N	N	N	N	N
	-	In riser cable routing assemblies	Y	Y	N	N	N	N	N	N	N	N
	-	In one- and two-family dwellings	Y	Y	Y	Y	Y	Y	N	N	Y	N
Within buildings in other than air-handling spaces and risers	General	Y	Y	Y	Y	Y	Y	N	N	N	N
	In one- and two-family dwellings	Y	Y	Y	Y	Y	Y	Y	N	Y	N
	In multifamily dwellings	Y	Y	Y	Y	Y	Y	Y	N	N	N
	-	In nonconcealed spaces	Y	Y	Y	Y	Y	Y	Y	N	N	N
	-	Supported by cable trays	Y	Y	Y	Y	Y	N	N	N	N	N
	-	Under carpet, modular flooring, and planks	N	N	N	N	N	N	Y	N	N	N
	-	In distributing frames and cross-connect arrays	Y	Y	N	Y	N	N	N	N	N	Y

Applications		Wire and Cable Type										
		Plenum	Riser	BMR	General-Purpose	BM	Limited-Use	Under-carpet	BMU, BLU	Hybrid Power and Communications Cables	Communications Wires	
	-	In rigid metal conduit (RMC) and intermediate metal conduit (IMC)	Y	Y	Y	Y	Y	Y	Y	Y	Y	Y
	-	In any raceway recognized in Chapter 3	Y	Y	Y	Y	Y	Y	N	N	N	Y
	-	In plenum communications raceways	Y	Y	N	Y	N	N	N	N	N	Y
	-	In plenum cable routing assemblies	Y	Y	N	Y	N	N	N	N	N	Y
	-	In riser communications raceways	Y	Y	N	Y	N	N	N	N	N	Y
	-	In riser cable routing assemblies	Y	Y	N	Y	N	N	N	N	N	Y
	-	In general-purpose communications raceways	Y	Y	N	Y	N	N	N	N	N	Y
	-	In general-purpose cable routing assemblies	Y	Y	N	Y	N	N	N	N	N	Y

Note: An “N” in the table indicates that the cable type shall not be installed in the application. A “Y” indicates that the cable type shall be permitted to be installed in the application subject to the limitations described in 722.131. The Riser column includes all riser cables except BMR, and the General-Purpose column includes all general-purpose cables except BM.

Informational Note No. 1: Table 722.110 covers the applications of listed communications wires, cables, and raceways in buildings.

Informational Note No. 2: See 722.131(B) for restrictions to the installation of communications cables in fabricated ducts.

722.131 Installation of Cables Used for Communications Circuits, Communications Wires, Cable Routing Assemblies, and Communications Raceways.

(A) General.

Installation of cables used for communications circuits, communications wires, cable routing assemblies, and communications raceways shall comply with 722.131(A) through 722.131(L). Installation of cable routing assemblies and communications raceways shall comply also with 722.110. Types of cables used by this section shall be identified in Table 722.131(A).

Table 722.131(A) Cables Used for Communications Circuits

-	Listed Cable Types
Plenum cables	CMP, CATVP, BLP, OFNP, OFCP
Riser cables	CMR, CATVR, BMR, BLR, OFNR, OFCR
General-purpose cables	CMG, CM, CATV, BM, BL, OFNG, OFN, OFCG, OFC
Limited-use cables	CMX, CATVX, BLX
Under-carpet	CMUC
Underground	BMU, BLU

(B) Ducts Specifically Fabricated for Environmental Air.

Installations of cables used for communications circuits, communications wires, cable routing assemblies, and communications raceways in ducts specifically fabricated for environmental air shall be in accordance with 722.131(B)(1) and 722.131(B)(2).

(1) Uses Permitted.

The following cables shall be permitted in ducts specifically fabricated for environmental air as described in 720.22(B) if they are directly associated with the air distribution system:

(1) Plenum cables up to 1.22 m (4 ft) in length

(2) Plenum, rise, general-purpose, and limited-use cables installed in raceways that are installed in compliance with 720.22(B)

(2) Uses Not Permitted.

The following cables, wires, cable routing assemblies, and communications raceways shall not be permitted in ducts specifically fabricated for environmental air as described in 720.22(B):

(1) Plenum, riser, and general-purpose communications raceways

(2) Plenum, riser, and general-purpose cable routing assemblies

(3) Riser, general-purpose, and limited-use cables

(4) Type CMUC cables and wires

(5) Types BMU and BLU cables

(6) Communications wires

(7) Hybrid power and communications cables

Informational Note: See NFPA 90A-2024, *Standard for the Installation of Air-Conditioning and Ventilating Systems*, for information on fire protection of wiring installed in fabricated ducts.

(C) Other Spaces Used for Environmental Air (Plenums).

Installations of cables used for communications circuits, communications wires, cable routing assemblies, and communications raceways in other spaces used for environmental air (plenums) shall be in accordance with 722.131(C)(1) and 722.131(C)(2).

(1) Uses Permitted.

The following cables, wires, cable routing assemblies, and communications raceways shall be permitted in other spaces used for environmental air as described in 720.22(C):

(1) Plenum cables

(2) Plenum communications raceways

(3) Plenum cable routing assemblies

(4) Plenum cables installed in plenum communications raceways

(5) Plenum cables installed in plenum cable routing assemblies

(6) Plenum cables and plenum communications raceways supported by open metal cable tray systems

(7) Plenum, riser, general-purpose, and limited-use cables, and communications wires installed in raceways that are installed in compliance with 720.22(C)

(8) Plenum, riser, general-purpose, limited-use cables and plenum, riser, and general-purpose communications raceways supported by solid bottom metal cable trays with solid metal covers in other spaces used for environmental air (plenums) as described in 720.22(C)

(9) Plenum, riser, general-purpose, and limited-use cables installed in plenum, riser, and general-purpose communications raceways supported by solid bottom metal cable trays with solid metal covers in other spaces used for environmental air (plenums) as described in 720.22(C)

(2) Uses Not Permitted.

The following cables, wires, cable routing assemblies, and communications raceways shall not be permitted in other spaces used for environmental air as described in 720.22(C):

(1) Riser, general-purpose, and limited-use cables

(2) Riser and general-purpose communications raceways

(3) Riser and general-purpose cable routing assemblies

(4) Type CMUC cables and wires

(5) Types BMR, BM, BMU, and BLU cables

(6) Communications wires

(7) Hybrid power and communications cables

Informational Note: See NFPA 90A-2024, *Standard for the Installation of Air-Conditioning and Ventilating Systems*, for information on fire protection of wiring installed in other spaces used for environmental air.

(D) Risers — Cables, Cable Routing Assemblies, and Communications Raceways in Vertical Runs.

Installations of cables used for communications circuits, communications wires, cable routing assemblies, and communications raceways in risers shall be in accordance with 722.131(D)(1) and 722.131(D)(2).

(1) Uses Permitted.

The following cables, cable routing assemblies, and communications raceways shall be permitted in vertical runs penetrating one or more floors and in vertical runs in a shaft:

(1) Plenum and riser cables

(2) Plenum and riser communications raceways

(3) Plenum and riser cable routing assemblies

(4) Plenum and riser cables installed in the following:

(5) Plenum communications raceways

(6) Riser communications raceways

(7) Plenum cable routing assemblies

(8) Riser cable routing assemblies

(2) Uses Not Permitted.

The following cables, wires, cable routing assemblies, and communications raceways shall not be permitted in risers:

(1) General-purpose and limited-use cables

(2) General-purpose communications raceways

(3) General-purpose cable routing assemblies

(4) Type CMUC cables and wires

(5) Types BMR, BM, BMU, and BLU cables

(6) Communications wires

(7) Hybrid power and communications cables

Informational Note: See 720.21 for firestop requirements for floor penetrations.

(E) Risers — Cables and Innerducts in Metal Raceways.

Installations of cables used for communications circuits, communications wires, cable routing assemblies, and communications raceways in metal raceways in a riser having firestops at each floor shall be in accordance with 722.131(E)(1) and 722.131(E)(2).

(1) Uses Permitted.

The following cables and innerducts shall be permitted in metal raceways in a riser having firestops at each floor:

(1) Plenum, riser, general-purpose, and limited-use cables

(2) Plenum, riser, and general-purpose communications raceways (innerduct)

(3) Plenum, riser, general-purpose, and limited-use cables installed in the following:

(4) Plenum communications raceways (innerduct)

(5) Riser communications raceways (innerduct)

(6) General-purpose communications raceways (innerduct)

(2) Uses Not Permitted.

The following cables, wires, cable routing assemblies, and communications raceways shall not be permitted in metal raceways in a riser having firestops at each floor:

(1) Plenum, riser, and general-purpose cable routing assemblies

(2) Type CMUC cables and wires

(3) Types BMR, BM, BMU, and BLU cables

(4) Communications wires

(5) Hybrid power and communications cables

Informational Note: See 720.21 for firestop requirements for floor penetrations.

(F) Risers — Cables, Cable Routing Assemblies, and Communications Raceways in Fireproof Shafts.

Installations of cables used for communications circuits, communications wires, cable routing assemblies, and communications raceways in fireproof riser shafts having firestops at each floor shall be in accordance with 722.131(F)(1) and 722.131(F)(2).

(1) Uses Permitted.

The following cables, cable routing assemblies, and communications raceways shall be permitted to be installed in fireproof riser shafts having firestops at each floor:

(1) Plenum, riser, general-purpose, and limited-use cables

(2) Plenum, riser, and general-purpose communications raceways

(3) Plenum, riser, and general-purpose cable routing assemblies

(4) Plenum, riser, general-purpose, and limited-use cables installed in the following:

(5) Plenum communications raceways

(6) Riser communications raceways

(7) General-purpose communications raceways

(8) Plenum cable routing assemblies

(9) Riser cable routing assemblies

(10) General-purpose cable routing assemblies

(2) Uses Not Permitted.

The following cables, wires, cable routing assemblies, and communications raceways shall not be permitted in metal raceways in fireproof riser shafts having firestops at each floor:

(1) Type CMUC cables and wires

(2) Type BMU and BLU cables

(3) Communications wires

(4) Hybrid power and communications cables

Informational Note: See 720.21 for firestop requirements for floor penetrations.

(G) Risers — One- and Two-Family Dwellings.

Installations of cables used for communications circuits, communications wires, cable routing assemblies, and communications raceways in risers in one- and two-family dwellings shafts shall be in accordance with 722.131(G)(1) and 722.131(G)(2).

(1) Uses Permitted.

The following cables, cable routing assemblies, and communications raceways shall be permitted in one- and two-family dwellings:

(1) Plenum, riser, and general-purpose cables

(2) Limited-use cables less than 6 mm (0.25 in.) in diameter

(3) Plenum, riser, and general-purpose communications raceways

(4) Plenum, riser, and general-purpose cable routing assemblies

(5) Plenum, riser, and general-purpose cables installed in the following:

(6) Plenum communications raceways

(7) Riser communications raceways

(8) General-purpose communications raceways

(9) Plenum cable routing assemblies

(10) Riser cable routing assemblies

(11) General-purpose cable routing assemblies

(2) Uses Not Permitted.

The following cables and wires shall not be permitted in risers in one- and two-family dwellings:

(1) Type CMUC cables and wires

(2) Type BMU and BLU cables

(3) Communications wires

(4) Hybrid power and communications cables

(H) Cable Trays.

Installations of cables used for communications circuits, communications wires, cable routing assemblies, and communications raceways supported by cable trays shall be in accordance with 722.131(H)(1) and 722.131(H)(2).

(1) Uses Permitted.

The following wires, cables, and communications raceways shall be permitted to be supported by cable trays:

(1) Plenum, riser, and general-purpose cables

(2) Plenum, riser, and general-purpose communications raceways

(3) Communications wires, plenum, riser, and general-purpose cables installed in the following:

(4) Plenum communications raceways

(5) Riser communications raceways

(6) General-purpose communications raceways

(2) Uses Not Permitted.

The following cables and wires shall not be supported by cable trays:

(1) Limited-use cables

(2) Type CMUC cables and wires

(3) Type BMU and BLU cables

(4) Communications wires

(5) Hybrid power and communications cables

(I) Distributing Frames and Cross-Connect Arrays.

Installations of cables used for communications circuits, communications wires, cable routing assemblies, and communications raceways in distributing frames and cross-connect arrays shall be in accordance with 722.131(I)(1) and 722.131(I)(2).

(1) Uses Permitted.

The following wires, cables, cable routing assemblies, and communications raceways shall be permitted to be installed in distributing frames and cross-connect arrays:

(1) Plenum, riser, general-purpose cables, and communications wires

(2) Plenum, riser, and general-purpose communications raceways

(3) Plenum, riser, and general-purpose cable routing assemblies

(4) Communications wires, plenum, riser, and general-purpose cables installed in the following:

(5) Plenum communications raceways

(6) Riser communications raceways

(7) General-purpose communications raceways

(8) Plenum cable routing assemblies

(9) Riser cable routing assemblies

(10) General-purpose cable routing assemblies

(2) Uses Not Permitted.

The following cables and wires shall not be installed in distributing frames and cross-connect arrays:

(1) Types BMR, BM, BMU, and BLU cables

(2) Limited-use cables

(3) Type CMUC cables and wires

(4) Hybrid power and communications cables

(J) Other Building Locations.

Installations of cables used for communications circuits, cable communications wires, routing assemblies, and communications raceways in building locations other than those covered in 722.131(B) through 722.131(I) shall be in accordance with 722.131(J)(1) and 722.131(J)(2).

(1) Uses Permitted.

The following wires, cables, cable routing assemblies, and communications raceways shall be permitted to be installed in building locations other than the locations covered in 722.131(B) through 722.131(I):

(1) Plenum, riser, and general-purpose cables

(2) Limited-use cables with a maximum of 3 m (10 ft) of exposed length in nonconcealed spaces

(3) Plenum, riser, and general-purpose communications raceways

(4) Plenum, riser, and general-purpose cable routing assemblies

(5) Communications wires, plenum, riser, and general-purpose cables installed in the following:

(6) Plenum communications raceways

(7) Riser communications raceways

(8) General-purpose communications raceways

(9) Plenum, riser, and general-purpose cables installed in the following:

(10) Plenum cable routing assemblies

(11) Riser cable routing assemblies

(12) General-purpose cable routing assemblies

(13) Communications wires and plenum, riser, general-purpose, and limited-use cables installed in raceways recognized in Chapter 3

(14) Type CMUC under-carpet communications wires and cables installed under carpet, modular flooring, and planks.

(2) Uses Not Permitted.

The following cables, wires, cable routing assemblies, and communications raceways shall not be installed in building locations other than the locations covered in 722.131(B) through 722.131(I):

(1) Types BMU and BLU cables

(2) Communications wires

(3) Hybrid power and communications cables

(K) Multifamily Dwellings.

Installations of cables used for communications circuits, communications wires, cable routing assemblies, and communications raceways in multifamily dwellings shall be in accordance with 722.131(K)(1) and 722.131(K)(2).

(1) Uses Permitted.

The following cables, cable routing assemblies, and communications raceways shall be permitted to be installed in multifamily dwellings in locations other than the locations covered in 722.131(B) through 722.131(G):

(1) Plenum, riser, and general-purpose cables

(2) Limited-use cables less than 6 mm (0.25 in.) in diameter in nonconcealed spaces

(3) Plenum, riser, and general-purpose communications raceways

(4) Plenum, riser, and general-purpose cable routing assemblies

(5) Communications wires and plenum, riser, and general-purpose cables installed in the following:

(6) Plenum communications raceways

(7) Riser communications raceways

(8) General-purpose communications raceways

(9) Plenum, riser, and general-purpose cables installed in the following:

(10) Plenum cable routing assemblies

(11) Riser cable routing assemblies

(12) General-purpose cable routing assemblies

(13) Communications wires and plenum, riser, general-purpose, and limited-use cables installed in raceways recognized in Chapter 3

(14) Type CMUC under-carpet communications wires and cables installed under carpet, modular flooring, and planks

(2) Uses Not Permitted.

The following cables, cable routing assemblies, and communications raceways shall not be installed in multifamily dwellings in locations other than the locations covered in 722.131(B) through 722.131(G):

(1) Types BMU and BLU cables

(2) Communications wires

(3) Hybrid power and communications cable.

(L) One- and Two-Family Dwellings.

Installations of cables used for communications circuits, communications wires, cable routing assemblies, and communications raceways in one- and two-family dwellings in locations other than those covered in 722.131(B) through 722.131(F) shall be in accordance with 722.131(L)(1) and 722.131(L)(2).

(1) Uses Permitted.

The following wires, cables, cable routing assemblies, and communications raceways shall be permitted to be installed in one- and two-family dwellings in locations other than the locations covered in 722.131(B) through 722.131(F):

(1) Plenum, riser, and general-purpose cables

(2) Limited-use cables less than 6 mm (0.25 in.) in diameter

(3) Plenum, riser, and general-purpose communications raceways

(4) Plenum, riser, and general-purpose cable routing assemblies

(5) Communications wires and plenum, riser, and general-purpose cables installed in the following:

(6) Plenum communications raceways

(7) Riser communications raceways

(8) General-purpose communications raceways

(9) Plenum, riser, and general-purpose cables installed in the following:

(10) Plenum cable routing assemblies

(11) Riser cable routing assemblies

(12) General-purpose cable routing assemblies

(13) Communications wires and plenum, riser, general-purpose, and limited-use cables installed in raceways recognized in Chapter 3

(14) Type CMUC under-carpet communications wires and cables installed under carpet, modular flooring, and planks

(15) Hybrid power and communications cable listed in accordance 722.100

(2) Uses Not Permitted.

The following cables, wires, cable routing assemblies, and communications raceways shall not be installed in one- and two-family dwellings in locations other than those covered in 722.131(B) through 722.131(F):

(1) Types BMU and BLU cables

(2) Communications wires

~~722~~ 822 .132 Permitted Substitutions of Listed Cables Used for Communications Circuits and Communications Wires.

(A) Permitted Substitutions of Listed Communications Cables.

The substitutions for communications cables listed in Table 722.132(A) and illustrated in Figure 722.132(A) shall be permitted.

Table 722.132(A) Listed Communications Cable Substitutions

Cable Type	Permitted Substitutions
CMR	CMP
CMG, CM	CMP, CMR
CMX	CMP, CMR, CMG, CM

Figure 722.132(A) Listed Communications Cable Substitution Hierarchy.

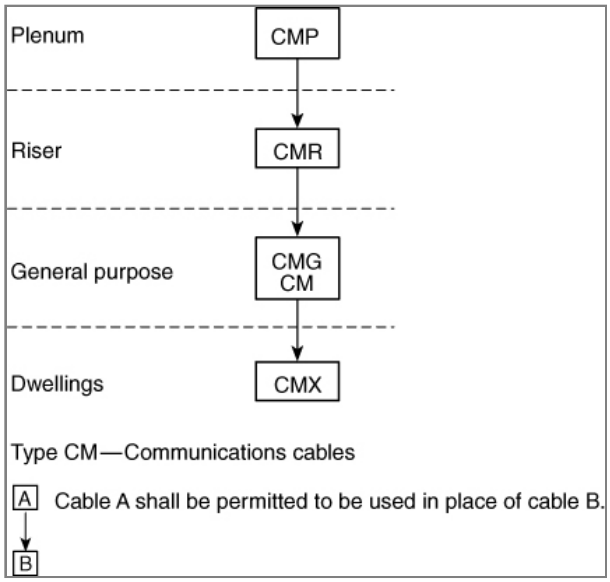

722.133 Installation of Communications Wires and Cables and CATV-Type Coaxial Cables.

Installation of communications wires and cables, from the protector to the equipment, or where no protector is required, communications wires and cables attached to the outside or inside of the building, shall comply with 722.133(A) and 722.133(B). Installation of CATV-type coaxial cables, beyond the point of grounding as defined in 750.48, shall comply with 722.133(A) through 722.133(C).

(A) In Raceways, Cable Trays, Boxes, Cables, Enclosures, and Cable Routing Assemblies.

(1) Other Circuits.

Communications cables and CATV-type coaxial cables shall be permitted in the same raceway, cable tray, box, enclosure, or cable routing assembly together and with jacketed cables of any of the following:

(1) Class 2 and Class 3 remote-control, signaling, and power-limited circuits in compliance with 645.6(E)(2) or Article 725, Parts I and II

(2) Power-limited fire alarm systems in compliance with Article 760, Parts I and III

(3) Nonconductive and conductive optical fiber cables in compliance with Article 722, Parts I and III

(4) Communications circuits in compliance with Article 722, Parts I and III

(5) Community antenna television and radio distribution systems in compliance with Article 722, Parts I and III

(6) Low-power network-powered broadband communications circuits in compliance with Article 722, Parts I and III

(2) Class 2 and Class 3 Circuits.

Class 1 circuits shall not be run in the same cable with communications circuits. Class 2 and Class 3 circuit conductors shall be permitted in the same listed communications cable with communications circuits.

(3) Electric Light, Power, Class 1, Non-Power-Limited Fire Alarm, and Medium-Power Network-Powered Broadband Communications Circuits in Raceways, Compartments, and Boxes.

Communications wires and cables and CATV-type coaxial cables shall not be placed in any raceway, compartment, outlet box, junction box, or similar fitting with conductors of electric light, power, Class 1, non-power-limited fire alarm, or medium-power network-powered broadband communications circuits.

Exception No. 1: Communications wires and cables and CATV-type coaxial cables shall be permitted to be placed in any raceway, compartment, outlet box, junction box, or other enclosures with conductors of electric light, power, Class 1, non-power-limited fire alarm, or medium-power network-powered broadband communications circuits where all of the conductors of electric light, power, Class 1, non-power-limited fire alarm, and medium-power network-powered broadband communications circuits are separated from all of the communications wires and cables and CATV-type coaxial cables by a permanent barrier or listed divider.

Exception No. 2: Communications wires and cables and CATV-type coaxial cables shall be permitted to be placed in outlet boxes, junction boxes, or similar fittings or compartments with power conductors where such conductors are introduced solely for power supply to the communications and coaxial cable system distribution equipment. The power circuit conductors shall be routed within the enclosure to maintain a minimum 6 mm (¼ in.) separation from the communications wires and cables and the CATV-type coaxial cables.

Exception No. 3: Separation of circuits shall not be required in elevator traveling cables constructed in accordance with by 620.36.

(B) Other Applications.

Communications wires and cables and CATV-type coaxial cables shall be separated at least 50 mm (2 in.) from conductors of any electric light, power, Class 1, non-power-limited fire alarm, or medium-power network-powered broadband communications circuits.

Exception No. 1: Separation shall not be required where either of the following applies: (1) All of the conductors of electric light, power, Class 1, non-power-limited fire alarm, and medium-power network-powered broadband communications circuits are in a raceway or in metal-sheathed, metal-clad, nonmetallic-sheathed, Type AC, or Type UF cables. (2) All of the communications wires and cables and all of the CATV-type coaxial cables are encased in raceway.

Exception No. 2: Separation shall not be required where the communications wires and cables and CATV-type coaxial cables are permanently separated from the conductors of electric light, power, Class 1, non-power-limited fire alarm, and medium-power network-powered broadband communications circuits by a continuous and firmly fixed nonconductor, such as porcelain tubes or flexible tubing, in addition to the insulation on the wire.

(C) Support of Communications Wires and Cables and CATV-Type Coaxial Cables.

Raceways shall be used for their intended purpose. Communications wires and cables and CATV-type coaxial cables shall not be strapped, taped, or attached by any means to the exterior of any raceway as a means of support.

Exception: Overhead (aerial) spans of communications drop wires, communications cables, and CATV-type coaxial cables shall be permitted to be attached to the exterior of a raceway-type mast intended for the attachment and support of such wires and cables.

(D) Permitted Substitutions of Listed Coaxial Type CATV Cables.

The substitutions for coaxial cables in Table 722.133(D) and illustrated in Figure 722.133(D) shall be permitted.

Informational Note: The substitute cables in Table 722.133(D) and Figure 722.133(D) are only coaxial-type cables.

Table 722.133(D) Permitted Substitutions of Listed Coaxial Type CATV Cables

Cable Type	Permitted Substitutions
CATVP	CMP, BLP
CATVR	CATVP, CMP, CMR, BMR, BLP, BLR
CATV	CATVP, CMP, CATVR, CMR, CMG, CM, BMR, BM, BLP, BLR, BL
CATVX	CATVP, CMP, CATVR, CMR, CATV, CMG, CM, BMR, BM, BLP, BLR, BL, BLX

Figure 722.133(D) Listed Coaxial Type CATV Cables Permitted Substitution Hierarchy.

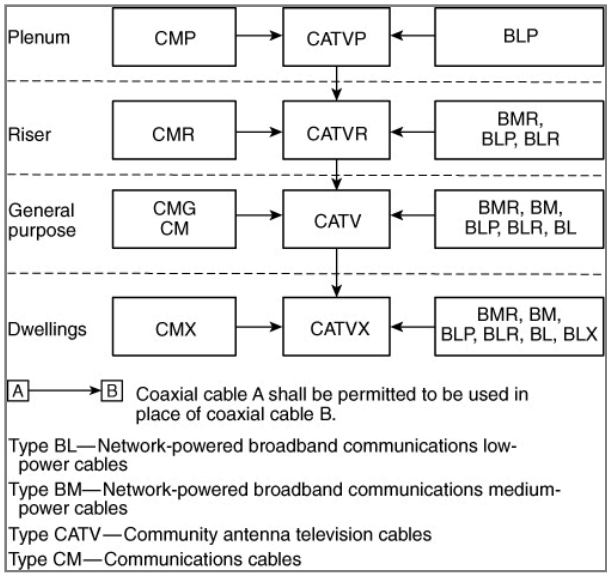

(E) Dwelling Unit Communications Outlet.

For new construction, a minimum of one communications outlet shall be installed with the dwelling in a readily accessible area and cabled to the service provider demarcation point.

722.134 Installation of Network-Powered Broadband Communications Cables and Equipment.

Cable and equipment installations within buildings shall comply with 722.134(A) through 722.134(C), as applicable.

(A) Separation of Conductors.

(1) In Raceways, Cable Trays, Boxes, Enclosures, and Cable Routing Assemblies.

(a) *Low- and Medium-Power Network-Powered Broadband Communications Circuit Cables.* Low- and medium-power network-powered broadband communications cables shall be permitted in the same raceway, cable tray, box, enclosure, or cable routing assembly.

(b) *Low-Power Network-Powered Broadband Communications Circuit Cables with Other Circuits.* Low-power network-powered broadband communications cables shall be permitted in the same raceway, cable tray, box, enclosure, or cable routing assembly with jacketed cables of any of the following circuits:

(3) Class 2 and Class 3 remote-control, signaling, and power-limited circuits in compliance with Article 725, Parts I and II

(4) Power-limited fire alarm systems in compliance with Article 760, Parts I and III

(5) Communications circuits in compliance with Article 722, Parts I and III

(6) Nonconductive and conductive optical fiber cables in compliance with Article 722, Parts I and III

(7) Community antenna television and radio distribution systems in compliance with Article 722, Parts I and III

(h) *Medium-Power Network-Powered Broadband Communications Circuit Cables with Optical Fiber Cables and Other Communications Cables.* Medium-power network-powered broadband communications cables shall not be permitted in the same raceway, cable tray, box, enclosure, or cable routing assembly with conductors of any of the following circuits:

(9) Communications circuits in compliance with Article 722, Parts I and III

(10) Conductive optical fiber cables in compliance with Article 722, Parts I and III

(11) Community antenna television and radio distribution systems in compliance with Article 722, Parts I and III

(l) *Medium-Power Network-Powered Broadband Communications Circuit Cables with Other Circuits.* Medium-power network-powered broadband communications cables shall not be permitted in the same raceway, cable tray, box, enclosure, or cable routing assembly with conductors of any of the following circuits:

(13) Class 2 and Class 3 remote-control, signaling, and power-limited circuits in compliance with Article 725, Parts I and II

(14) Power-limited fire alarm systems in compliance with Article 760, Parts I and III

(o) *Electric Light, Power, Class 1, Nonpowered Broadband Communications Circuit Cables.* Network-powered broadband communications cable shall not be placed in any raceway, cable tray, compartment, outlet box, junction box, or similar fittings with conductors of electric light, power, Class 1, or non-power-limited fire alarm circuit cables.

Exception No. 1: Network-powered broadband communications cable shall be permitted to be placed in a raceway, cable tray, compartment, outlet box, junction box, or similar fittings with conductors of electric light, power, Class 1, or non-power-limited fire alarm circuit cables where all of the conductors of electric light, power, Class 1, non-power-limited fire alarm circuits are separated from all of the network-powered broadband communications cables by a permanent barrier or listed divider.

Exception No. 2: Where power circuit conductors are installed in in outlet boxes, junction boxes, or similar fittings or compartments where such conductors are introduced solely for power supply to the network-powered broadband communications system distribution equipment, the power circuit conductors shall be routed within the enclosure to maintain a minimum 6 mm (¼ in.) separation from network-powered broadband communications cables.

(2) Other Applications.

Network-powered broadband communications cable shall be separated at least 50 mm (2 in.) from conductors of any electric light, power, Class 1, and non-power-limited fire alarm circuits.

Exception No. 1: Separation shall not be required where either of the following applies:

(1) All of the conductors of electric light, power, Class 1, and non-power-limited fire alarm circuits are in a raceway or in metal-sheathed, metal-clad, nonmetallic-sheathed, Type AC, or Type UF cables.

(2) All of the network-powered broadband communications cables are encased in a raceway.

Exception No. 2: Separation shall not be required where the network-powered broadband communications cables are permanently separated from the conductors of electric light, power, Class 1, and non-power-limited fire alarm circuits by a continuous and firmly fixed nonconductor, such as porcelain tubes or flexible tubing, in addition to the insulation on the wire.

(B) Support of Network-Powered Broadband Communications Cables.

Raceways shall be used for their intended purpose. Network-powered broadband communications cables shall not be strapped, taped, or attached by any means to the exterior of any conduit or raceway as a means of support.

(C) Splicing of Medium-Powered Network-Powered Communications Cables.

Where a medium-powered network-powered broadband communications cable is spliced or extended, a listed junction box or listed patch panel shall be used.

(D) Bends.

Bends in network broadband cable shall be made so as not to damage the cable. The radius of the curve of the inner edge of any bend shall not be less than 10 times the diameter of the cable.

Informational Note: See ANSI/TIA-568.0-E, *Generic Telecommunications Cabling for Customer Premises*, for information on bend radii of network broadband cable during different types of installation conditions.

722.135 Underground Network-Powered Broadband Communications Cables Entering Buildings.

Underground network-powered broadband communications cables entering buildings shall comply with 722.135(A) and 722.135(B).

(A) Protection from Physical Damage.

Direct-buried cable, conduit, or other raceways shall be installed to meet the minimum cover requirements of Table 722.135(A). In addition, direct-buried cables emerging from the ground shall be protected by enclosures, raceways, or other approved means extending from the minimum cover distance required by Table 830.47(A) below grade to a point at least 2.5 m (8 ft) above finished grade. In no case shall the protection be required to exceed 450 mm (18 in.) below finished grade. Types BMU and BLU direct-buried cables emerging from the ground shall be installed in rigid metal conduit (RMC), intermediate metal conduit (IMC), rigid nonmetallic conduit, or other approved means extending from the minimum cover distance required by Table 830.47(A) below grade to the point of entrance.

Exception: Protection from physical damage shall not be required if a low-power network-powered broadband communications circuit is equipped with a listed fault protection device that is located on the network side of the network-powered broadband cable being protected and the device is appropriate to the network-powered broadband communications cable used.

Table 722.135(A) Network-Powered Broadband Communications Systems Minimum Cover Requirements.

Location of Wiring Method or Circuit	Direct Burial Cables		Rigid Metal Conduit (RMC) or Intermediate Metal Conduit (IMC)		Nonmetallic Raceways Listed for Direct Burial; Without Concrete Encasement or Other Approved Raceways	
	mm	in.	mm	in.	mm	in.
All locations not specified below	450	18	150	6	300	12
In trench below 50 mm (2 in.) thick concrete or equivalent	300	12	150	6	150	6
Under a building (in raceway only)	0	0	0	0	0	0
Under minimum of 100 mm (4 in.) thick concrete exterior slab with no vehicular traffic and the slab extending not less than 150 mm (6 in.) beyond the underground installation	300	12	100	4	100	4
One- and two-family dwelling driveways and outdoor parking areas and used only for dwelling-related purposes	300	12	300	12	300	12

Notes:

1. Cover shall be the shortest distance measured between a point on the top surface of any direct-buried cable, conduit, or other raceway and the top surface of finished grade, concrete, or similar cover.

2. Raceways approved for burial only where concrete encased shall require a concrete envelope not less than 50 mm (2 in.) thick.

3. Lesser depths shall be permitted where cables rise for terminations or splices or where access is otherwise required.

4. Where solid rock is encountered, all wiring shall be installed in metal or nonmetallic raceway permitted for direct burial. The raceways shall be covered by a minimum of 50 mm (2 in.) of concrete extending down to rock.

(B) Pools.

Cables located under the pool or within the area extending 1.5 m (5 ft) horizontally from the inside wall of the pool shall meet those clearances and requirements specified in 680.11.

~~722~~ 822 .136 Permitted Substitutions of Network-Powered Broadband Communications System Cables.

The substitutions for network-powered broadband system cables listed in Table 722.136 shall be permitted.

Table 722.136 Permitted Substitutions of Network-Powered Broadband Communications System Cables.

Cable Type	Permitted Cable Substitutions
BM	BMR
BLP	CMP, CL3P
BLR	CMP, CL3P, CMR, CL3R, BLP, BMR
BL	CMP, CMR, CM, CMG, CL3P, CL3R, CL3, BMR, BM, BLP, BLR
BLX	CMP, CMR, CM, CMG, CMX, CL3P, CL3R, CL3, CL3X, BMR, BM, BLP, BRP, BL

~~722~~ 822 .140 Applications, Installations and Wiring Methods for Class 2 or Class 3 Circuits.

(A) General.

Class 2 and Class 3 circuits on the load side of the power source shall be permitted to be installed using wiring methods and materials in accordance with 722.140(A), 722.140(B), or a combination of both.

(1) Class 1 Wiring Methods and Materials.

Use of Class 1 wiring methods for Class 2 and Class 3 circuits shall be permitted. Separation from electric light, power, Class 1, non-power-limited fire alarm circuit conductors, and medium-power network-powered broadband communications cables shall comply with 725.136.

Exception: The ampacity adjustment factors given in 310.15(C)(1) shall not apply.

(2) Class 2 and Class 3 Wiring Methods and Materials.

Conductors on the load side of the power source shall be insulated in accordance with 722.100 and 722.102 and be installed in accordance with 722.110, 722.140(B), and 725.136.

Exception No. 1: As provided for in 620.21 for elevators and similar equipment.

Exception No. 2: Other wiring methods and materials installed in accordance with 725.3 shall be permitted to extend or replace the conductors and cables described in 722.100(A) and permitted by 722.140(A)(2).

Exception No. 3: Bare Class 2 conductors shall be permitted as part of a listed intrusion protection system where installed in accordance with the listing instructions for the system.

(B) Cables Transmitting Power and Data.

(1) Classification of Circuits.

Circuits carrying data and power shall be classified as electrical power circuits in accordance with the type of electrical power carried.

Exception: PoE circuits shall be classified as communications and Class 2 or Class 3.

(2) Bundling of Cables Transmitting Power and Data.

Sections 722.140(B)(1) and 722.140(B)(2) shall apply to Class 2 and Class 3 circuits that transmit power and data to a powered device over listed cabling. Section 720.30 and Article 725, Parts I and III shall apply to Class 2 and Class 3 circuits that transmit power and data. The conductors that carry power for the data circuits shall be copper. The current in the power circuit shall not exceed the current limitation of the connectors.

Informational Note No. 1: One example of the use of cables that transmit power and data is the connection of closed-circuit TV cameras (CCTV).

Informational Note No. 2: The 8P8C connector is in widespread use with powered communications systems. IEC 60603-7-2008, Connectors for electronic equipment — Part 7-1: Detail specification for 8-way, unshielded, free and fixed connectors, specifies these connectors to have a current-carrying capacity per contact of 1.0 amperes maximum at 60°C (149°F). See IEC 60603-7 for more information on current-carrying capacity at higher and lower temperatures.

Informational Note No. 3: The requirements of Table 722.140(B)(4) were derived for carrying power and data over 4-pair copper balanced twisted pair cabling. ANSI/TIA 568-C.2-2009, Commercial Building Telecommunications Cabling Standard — Part 2: Balanced Twisted-Pair Telecommunications Cabling and Components, describes this type of cabling.

Informational Note No. 4: See TIA-TSB-184-A-2017, Guidelines for Supporting Power Delivery Over Balanced Twisted-Pair Cabling, for information on installation and management of balanced twisted pair cabling supporting power delivery.

Informational Note No. 5: See ANSI/NEMA C137.3-2017, American National Standard for Lighting Systems — Minimum Requirements for Installation of Energy Efficient Power over Ethernet (PoE) Lighting Systems, for information on installation of cables for PoE lighting systems.

Informational Note No. 6: Rated current for power sources covered in 722.130 is the output current per conductor the power source is designed to deliver to an operational load at normal operating conditions, as declared by the manufacturer. In the design of these systems, the actual current in a given conductor might vary from the rated current per conductor by as much as 20 percent. An increase in current in one conductor is offset by a corresponding decrease in current in one or more conductors of the same cable.

(3) Use of 4-Pair Class 2 or Class 3 Cables to Transmit Power and Data.

Where Type CL3P, Type CL2P, Type CL3R, Type CL2R, Type CL3, or Type CL2 4-pair cables transmit power and data, the rated current per conductor of the power source shall not exceed the ampacities in Table 722.140(B) at an ambient temperature of 30°C (86°F). For ambient temperatures above 30°C (86°F), the correction factors in Table 310.15(B)(1)(1) or in Equation 310.15(B) shall apply.

Exception: Compliance with Table 722.140(B) shall not be required for installations where conductors are 24 AWG or larger and the rated current per conductor of the power source does not exceed 0.3 amperes.

Informational Note: One example of the use of Class 2 cables is a network of closed-circuit TV cameras using 24 AWG, 60°C (140°F) rated, Type CL2R, Category 5e balanced twisted-pair cabling.

(4) Use of Class 2-LP or Class 3-LP Cables to Transmit Power and Data.

Type CL3P-LP, Type CL2P-LP, Type CL3R-LP, Type CL2R-LP, Type CL3-LP, or Type CL2-LP cables shall be permitted to supply power to equipment from a power source with a rated current per conductor up to the marked current limit located immediately following the suffix "-LP" and shall be permitted to transmit data to the equipment. Where the number of bundled LP cables is 192 or less and the selected ampacity of the cables in accordance with Table 722.140(B)(4) exceeds the marked current limit of the cable, the ampacity determined from the table shall be permitted to be used. For ambient temperatures above 30°C (86°F), the correction factors of Table 310.15(B)(1)(1) or Equation 310.15(B) shall apply. The Class 2-LP and Class 3-LP cables shall comply with the following, as applicable:

(1) Cables with the suffix "-LP" shall be permitted to be installed in bundles, raceways, cable trays, communications raceways, and cable routing assemblies.

(2) Cables with the suffix "-LP" and a marked current limit shall follow the substitution hierarchy of 722.122 for the cable type without the suffix "-LP" and without the marked current limit.

(3) System design shall be permitted by qualified persons under engineering supervision.

Informational Note: An example of the marking on a 23 AWG, 4-pair, Class 2 cable rated 75°C (167°F) with an LP current rating of 0.6 amperes per conductor is "CL2-LP(0.6A) 75°C 23 AWG 4-pair". See 722.100(A)(9).

Table 722.140(B)(4) Ampacities of Each Conductor in Amperes in 4-Pair Class 2 or Class 3 Balanced Twisted-Pair Cables Based on Copper Conductors at an Ambient Temperature of 30°C (86°F) with All Conductors in All Cables Carrying Current, 60°C (140°F), 75°C (167°F), and 90°C (194°F) Rated Cables

AWG	Number of 4-Pair Cables in a Bundle																	
	1–7			8–19			20–37			38–61			62–91			92–192		
	Temperature Rating			Temperature Rating			Temperature Rating			Temperature Rating			Temperature Rating			Temperature Rating		
	60°C	75°C	90°C	60°C	75°C	90°C	60°C	75°C	90°C	60°C	75°C	90°C	60°C	75°C	90°C	60°C	75°C	90°C
26	1	1.23	1.42	0.71	0.87	1.02	0.55	0.68	0.78	0.46	0.57	0.67	0.45	0.55	0.64	NA	NA	NA
24	1.19	1.46	1.69	0.81	1.01	1.17	0.63	0.78	0.91	0.55	0.67	0.78	0.46	0.56	0.65	0.4	0.48	0.55
23	1.24	1.53	1.78	0.89	1.11	1.28	0.77	0.95	1.1	0.66	0.8	0.93	0.58	0.71	0.82	0.45	0.55	0.63
22	1.5	1.86	2.16	1.04	1.28	1.49	0.77	0.95	1.11	0.66	0.82	0.96	0.62	0.77	0.89	0.53	0.63	0.72

Notes:

1. For bundle sizes over 192 cables, or for conductor sizes smaller than 26 AWG, ampacities shall be permitted to be determined by qualified personnel under engineering supervision.

2. Where only half of the conductors in each cable are carrying current, the values in the table shall be permitted to be increased by a factor of 1.4.

Informational Note No. 1: Elevated cable temperatures can reduce a cable's data transmission performance. For information on practices for 4-pair balanced twisted pair cabling, see TIA-TSB-184-A, *Guidelines for Supporting Power Delivery Over Balanced Twisted-Pair Cabling*, and ANSI/TIA-568-C., *Balanced Twisted-Pair Telecommunications Cabling and Components Standard*, 6.4.7, 6.6.3, and Annex G, which provide guidance on adjustments for operating temperatures between 20°C and 60°C (68°F and 140°F).

Informational Note No. 2: The per-contact current rating of connectors can limit the maximum allowable current below the ampacity shown in Table 722.140.

722.150 Applications, Installations, and Wiring Methods for Class 4 Circuit Cables.

(A) Applications.

Class 4 cables shall not be permitted for any application that is not part of a Class 4 system.

Exception: Use of Class 4 cable for other applications shall be permitted if the cable has been listed as suitable for other applications.

(B) Installation in Dwelling Units.

Where Class 4 cables are used in a dwelling unit, 722.150(C) shall apply.

(C) Ampacity.

The ampacity of Class 4 cables shall comply with 720.6(B)(1) based on the temperature rating of the Class 4 cable for conductors sized 16 AWG to 6 AWG. For conductors sized 24 AWG to 17 AWG, the Class 4 cable shall have an ampacity in accordance with the marking FMP-XXA, where XX is the maximum ampacity permitted. In a dwelling unit(s), not more than 20 current- carrying conductors shall be installed without maintaining spacing.

Informational Note No. 1: See 722.100(A)(16) for additional Class 4 cable requirements.

Informational Note No. 2: See UL 1400-1-2022, *Outline of Investigation for Fault-Managed Power Systems — Part 1: General Requirements*, and UL 1400-2-2023, *Outline of Investigation for Fault-Managed Power Systems — Part 2: Requirements for Class 4 Cables*, for information on determining maximum ampacities.

~~722~~ 822 .160 Applications of Listed Optical Fiber Cables.

Permitted and nonpermitted applications of listed optical fiber cables shall be as indicated in Table 722.160. The permitted applications shall be subject to the installation requirements of 722.161 and 722.162. The substitutions for optical fiber cables in Table 722.165 and illustrated in Figure 722.165 shall be permitted.

Table 722.160 Applications of Listed Optical Fiber Cables in Buildings

Applications		Listed Optical Fiber Cable Type		
		OFNP, OFCP	OFNR, OFCR	OFNG, OFCG, OFN, OFC
In ducts specifically fabricated for environmental air as described in 720.22(B).	In fabricated ducts	Y	N	N
	In metal raceway that complies with 720.22(B)	Y	Y	Y
In other spaces used for environmental air (plenums) as described in 720.22(C)	In other spaces used for environmental air	Y	N	N
	-	In metal raceway that complies with 720.22(C)	Y	Y	Y
	-	In plenum communications raceways	Y	N	N
	-	In plenum cable routing assemblies	Y	N	N
	-	Supported by open metal cable trays	Y	N	N
	-	Supported by solid bottom metal cable trays with solid metal covers	Y	Y	Y
In risers	In vertical runs	Y	Y	N
	In metal raceways	Y	Y	Y
	In fireproof shafts	Y	Y	Y
	In plenum communications raceways	Y	Y	N
	In plenum cable routing assemblies	Y	Y	N
	In riser communications raceways	Y	Y	N
	In riser cable routing assemblies	Y	Y	N
	In one- and two-family dwellings	Y	Y	Y
Within buildings in other than air-handling spaces and risers	General	Y	Y	Y
	-	Supported by cable trays	Y	Y	Y
	-	In distributing frames and cross-connect arrays	Y	Y	Y
	-	In any raceway recognized in Chapter 3	Y	Y	Y
	-	In plenum communications raceway	Y	Y	Y
	-	In plenum cable routing assemblies	Y	Y	Y
	-	In riser communications raceways	Y	Y	Y
	-	In riser cable routing assemblies	Y	Y	Y
	-	In general-purpose communications raceways	Y	Y	Y
	-	In general-purpose cable routing assemblies	Y	Y	Y

Note: “N” indicates that the cable type shall not be permitted to be installed in the application. “Y” indicates that the cable type shall be permitted to be installed in the application subject to the limitations described in 722.161 and 722.162.

Informational Note No. 1: Article 722, Part III of covers installation methods within buildings. Table 722.160 covers the applications of listed optical fiber cables in buildings. The definition of *point of entrance* is in Article 100.

Informational Note No. 2: For information on the restrictions to the installation of optical fiber cables in ducts specifically fabricated for environmental air, see 722.161(B).

~~722~~ 822 .161 Installation of Optical Fiber Cables.

Installation of optical fiber cables shall comply with 722.161(A) through 722.161(H). Installation of raceways and cable routing assemblies shall comply with 722.110.

(A) Ducts Specifically Fabricated for Environmental Air.

Installations of optical fiber cables in ducts specifically fabricated for environmental air shall be in accordance with 722.161(A)(1) and 722.161(A)(2).

(1) Uses Permitted.

The following cables shall be permitted in ducts specifically fabricated for environmental air as described in 720.22(B) if they are directly associated with the air distribution system:

(1) Up to 1.22 m (4 ft) of Types OFNP and OFCP

(2) Types OFNP, OFCP, OFNR, OFCR, OFNG, OFCG, OFN, and OFC installed in raceways that are installed in compliance with 722.162

Informational Note: See NFPA 90A-2024, *Standard for the Installation of Air-Conditioning and Ventilating Systems*, for information on fire protection of wiring installed in fabricated ducts.

(2) Uses Not Permitted.

Types OFNR, OFCR, OFNG, OFCG, OFN, and OFC shall not be permitted to be installed in ducts specifically fabricated for environmental air as described in 720.22(B).

Informational Note: See NFPA 90A-2024, *Standard for the Installation of Air-Conditioning and Ventilating Systems*, for information on fire protection of wiring installed in fabricated ducts.

(B) Other Spaces Used for Environmental Air (Plenums).

Installations of optical fiber cables in other spaces used for environmental air shall be in accordance with 722.161(B)(1) and 722.161(B)(2).

(1) Uses Permitted.

The following cables shall be permitted in other spaces used for environmental air as described in 720.22(C):

(1) Types OFNP and OFCP

(2) Types OFNP and OFCP installed in plenum communications raceways

(3) Types OFNP and OFCP installed in plenum cable routing assemblies

(4) Types OFNP and OFCP supported by open metal cable tray systems

(5) Types OFNP, OFCP, OFNR, OFCR, OFNG, OFCG, OFN, and OFC installed in raceways that are installed in compliance with 720.22(C)

(6) Types OFNP, OFCP, OFNR, OFCR, OFNG, OFCG, OFN, and OFC supported by solid bottom metal cable trays with solid metal covers in other spaces used for environmental air (plenums), as described in 720.22(C)

(7) Types OFNP, OFCP, OFNR, OFCR, OFNG, OFCG, OFN, and OFC installed in plenum riser and general-purpose communications raceways supported by solid bottom metal cable trays with solid metal covers in other spaces used for environmental air (plenums), as described in 720.22(C)

(2) Risers — Cables in Vertical Runs.

Types OFNR, OFCR, OFNG, OFCG, OFN, and OFC shall not be permitted to be installed in other spaces used for environmental air (plenums).

Informational Note: See NFPA 90A-2024, *Standard for the Installation of Air-Conditioning and Ventilating Systems*, for information on fire protection of wiring installed in other spaces used for environmental air.

(C) Risers — Cables in Vertical Runs.

Installations of optical fiber cables in other spaces used for environmental air shall be in accordance with 722.161(B)(1) and 722.161(B)(2).

(1) Uses Permitted.

The following cables shall be permitted in vertical runs penetrating one or more floors and in vertical runs in a shaft:

(1) Types OFNP, OFCP, OFNR, and OFCR

(2) Types OFNP, OFCP, OFNR, and OFCR installed in the following:

(3) Plenum communications raceways

(4) Plenum cable routing assemblies

(5) Riser communications raceways

(6) Riser cable routing assemblies

(2) Uses Not Permitted.

Types OFNG, OFCG, OFN, and OFC shall not be permitted to be installed in vertical runs.

Informational Note: See 770.26 for firestop requirements for floor penetrations.

(D) Risers — Cables Permitted in Metal Raceways.

The following cables and innerducts shall be permitted in metal raceways in a riser having firestops at each floor:

(1) Types OFNP, OFCP, OFNR, OFCR, OFNG, OFCG, OFN, and OFC

(2) Types OFNP, OFCP, OFNR, OFCR, OFNG, OFCG, OFN, and OFC installed in the following:

(3) Plenum communications raceways (innerduct)

(4) Riser communications raceways (innerduct)

(5) General-purpose communications raceways (innerduct)

Informational Note: See 770.26 for firestop requirements for floor penetrations.

(E) Risers — Cables Permitted in Fireproof Shafts.

The following cables shall be permitted to be installed in fireproof riser shafts having firestops at each floor:

(1) Types OFNP, OFCP, OFNR, OFCR, OFNG, OFCG, OFN, and OFC

(2) Types OFNP, OFCP, OFNR, OFCR, OFNG, OFCG, OFN, and OFC installed in the following:

(3) Plenum communications raceways

(4) Plenum cable routing assemblies

(5) Riser communications raceways

(6) Riser cable routing assemblies

(7) General-purpose communications raceways

(8) General-purpose cable routing assemblies

Informational Note: See 770.26 for firestop requirements for floor penetrations.

(F) Risers — Cables Permitted in One- and Two-Family Dwellings.

The following cables shall be permitted in one- and two-family dwellings:

(1) Types OFNP, OFCP, OFNR, OFCR, OFNG, OFCG, OFN, and OFC

(2) Types OFNP, OFCP, OFNR, OFCR, OFNG, OFCG, OFN, and OFC installed in the following:

(3) Plenum communications raceways

(4) Plenum cable routing assemblies

(5) Riser communications raceways

(6) Riser cable routing assemblies

(7) General-purpose communications raceways

(8) General-purpose cable routing assemblies

(G) Cable Trays — Cables Permitted.

The following cables shall be permitted to be supported by cable trays:

(1) Types OFNP, OFCP, OFNR, OFCR, OFNG, OFCG, OFN, and OFC

(2) Types OFNP, OFCP, OFNR, OFCR, OFNG, OFCG, OFN, and OFC installed in the following:

(3) Plenum communications raceways

(4) Riser communications raceways

(5) General-purpose communications raceways

(H) Distributing Frames and Cross-Connect Arrays — Cables Permitted.

The following cables shall be permitted to be installed in distributing frames and cross-connect arrays:

(1) Types OFNP, OFCP, OFNR, OFCR, OFNG, OFCG, OFN, and OFC

(2) Types OFNP, OFCP, OFNR, OFCR, OFNG, OFCG, OFN, and OFC installed in the following:

(3) Plenum communications raceways

(4) Plenum cable routing assemblies

(5) Riser communications raceways

(6) Riser cable routing assemblies

(7) General-purpose communications raceways

(8) General-purpose cable routing assemblies

(I) Other Building Locations — Cables Permitted.

The following cables shall be permitted to be installed in building locations other than the locations covered in 722.161(A) through 722.161(G):

(1) Types OFNP, OFCP, OFNR, OFCR, OFNG, OFCG, OFN, and OFC

(2) Types OFNP, OFCP, OFNR, OFCR, OFNG, OFCG, OFN, and OFC installed in the following:

(3) Plenum communications raceways

(4) Plenum cable routing assemblies

(5) Riser communications raceways

(6) Riser cable routing assemblies

(7) General-purpose communications raceways

(8) General-purpose cable routing assemblies

(9) Types OFNP, OFCP, OFNR, OFCR, OFNG, OFCG, OFN, and OFC installed in a raceway of a type recognized in Chapter 3

722.162 Installation of Optical Fiber Cables in Raceways, Cable Routing Assemblies, and Cable Trays.

(A) Types of Raceways.

Optical fiber cables shall be permitted to be installed in any raceway that complies with either 722.162(A)(1) or 722.162(A)(2).

(1) Communications Raceways.

Optical fiber cables shall be permitted to be installed in listed communications raceways selected in accordance with Table 722.110(A).

(2) Other Recognized Raceways.

Optical fiber cables shall be permitted to be installed in raceways recognized by and installed in accordance with Chapter 3.

(B) Raceway Fill for Optical Fiber Cables.

Raceway fill for optical fiber cables shall comply with either 722.162(B)(1) or 722.162(B)(2).

(1) Without Electric Light or Power Conductors.

Where optical fiber cables are installed in a raceway without electric light or power conductors, the raceway fill requirements of Chapters 3 and 9 shall not apply.

(2) Nonconductive Optical Fiber Cables with Electric Light or Power Conductors.

Where nonconductive optical fiber cables are installed with electric light or power conductors in a raceway, the raceway fill requirements of Chapters 3 and 9 shall apply.

(C) Cable Routing Assemblies.

Optical fiber cables shall be permitted to be installed in listed cable routing assemblies selected in accordance with Table 722.110(B).

(D) Cable Trays.

Optical fiber cables shall be permitted to be installed in metal or listed nonmetallic cable tray systems.

722.163 Installation of Optical Fiber Cable in Innerduct.

Listed plenum communications raceways, listed riser communications raceways, and listed general-purpose communications raceways selected in accordance with Table 722.110(A) shall be permitted to be installed as innerduct in any type of listed raceway permitted in Chapter 3.

~~722~~ 822 .164 Installation of Optical Fibers and Electrical Conductors.

(A) In Cable Trays and Raceways.

Conductive optical fiber cables contained in an armored or metal-clad-type sheath and nonconductive optical fiber cables shall be permitted to occupy the same cable tray or raceway with conductors for electric light, power, Class 1, non-power-limited fire alarm, Type ITC, or medium-power network-powered broadband communications circuits operating at 1000 volts or less. Conductive optical fiber cables without an armored or metal-clad-type sheath shall not be permitted to occupy the same cable tray or raceway with conductors for electric light, power, Class 1, non-power-limited fire alarm, Type ITC, or medium-power network-powered broadband communications circuits, unless all of the conductors of electric light, power, Class 1, non-power-limited fire alarm, and medium-power network-powered broadband communications circuits are separated from all of the optical fiber cables by a permanent barrier or listed divider.

(B) In Cabinets, Outlet Boxes, and Similar Enclosures.

Nonconductive optical fiber cables shall not be permitted to occupy the same cabinet, outlet box, panel, or similar enclosure housing the electrical terminations of an electric light, power, Class 1, non-power-limited fire alarm, or medium-power network-powered broadband communications circuit unless one or more of the following conditions exist:

(1) The nonconductive optical fiber cables are functionally associated with the electric light, power, Class 1, non-power-limited fire alarm, or medium-power network-powered broadband communications circuit.

(2) The conductors for electric light, power, Class 1, non-power-limited fire alarm, Type ITC, or medium-power network-powered broadband communications circuits operate at 1000 volts or less.

(3) The nonconductive optical fiber cables and the electrical terminations of electric light, power, Class 1, non-power-limited fire alarm, or medium-power network-powered broadband communications circuit are installed in factory- or field-assembled control centers.

(4) The nonconductive optical fiber cables are installed in an industrial establishment where conditions of maintenance and supervision ensure that only qualified persons service the installation.

When optical fibers are within the same hybrid cable for electric light, power, Class 1, non-power-limited fire alarm, or medium-power network-powered broadband communications circuits operating at 1000 volts or less, they shall be permitted to be installed only where the functions of the optical fibers and the electrical conductors are associated.

Optical fibers in hybrid optical fiber cables containing only current-carrying conductors for electric light, power, or Class 1 circuits rated 1000 volts or less shall be permitted to occupy the same cabinet, cable tray, outlet box, panel, raceway, or other termination enclosure with conductors for electric light, power, or Class 1 circuits operating at 1000 volts or less.

Optical fibers in hybrid optical fiber cables containing current-carrying conductors for electric light, power, or Class 1 circuits rated over 1000 volts shall be permitted to occupy the same cabinet, cable tray, outlet box, panel, raceway, or other termination enclosure with conductors for electric light, power, or Class 1 circuits in industrial establishments, where conditions of maintenance and supervision ensure that only qualified persons service the installation.

(C) With Other Circuits.

Conductive and nonconductive optical fiber cables shall be permitted in the same raceway, cable tray, box, enclosure, or cable routing assembly, with conductors of any of the following:

(1) Class 2 and Class 3 remote-control, signaling, and power-limited circuits in compliance with 645.6(E)(2) or Article 725, Parts I and II

(2) Power-limited fire alarm systems in compliance with Article 760, Parts I and III

(3) Communications circuits in compliance with Article 805, Parts I and V

(4) Community antenna television and radio distribution systems in compliance with Article 820, Parts I and V

(5) Low-power network-powered broadband communications circuits in compliance with Article 830, Parts I and V

(D) Support of Optical Fiber Cables.

Raceways shall be used for their intended purpose. Optical fiber cables shall not be strapped, taped, or attached by any means to the exterior of any conduit or raceway as a means of support.

Exception: Overhead (aerial) spans of optical fiber cables shall be permitted to be attached to the exterior of a raceway-type mast intended for the attachment and support of such cables.

722.165 Permitted Substitutions of Listed Optical Fiber Cables.

The substitutions for optical fiber cables in Table 722.165 and illustrated in Figure 722.165 shall be permitted.

Table 722.165 Permitted Substitutions of Listed Optical Fiber Cable

Cable Type	Permitted Substitutions
OFNP	None
OFCP	OFNP
OFNR	OFNP
OFCR	OFNP, OFCP, OFNR
OFNG, OFN	OFNP, OFNR
OFCG, OFC	OFNP, OFCP, OFNR, OFCR, OFNG, OFN

Figure 722.165 Cable Substitution Hierarchy.

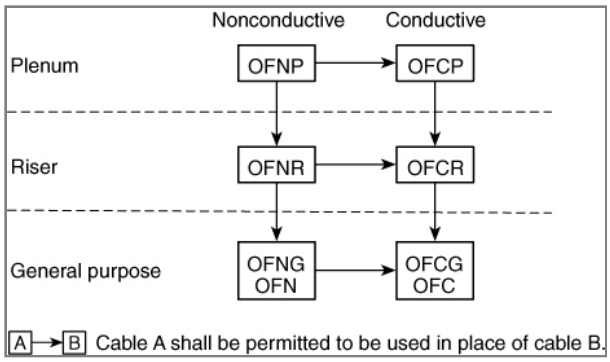

722.166 Overhead (Aerial) Optical Fiber Cables.

Overhead optical fiber cables containing a non-current-carrying metallic member entering buildings shall comply with 722.166(A) and 722.166(B).

(A) On Poles and In-Span.

Where outside plant optical fiber cables and electric light or power conductors are supported by the same pole or are run parallel to each other in-span, the conditions described in 722.166(A)(1) through 722.166(A)(4) shall be met.

(1) Relative Location.

Where practicable, the outside plant optical fiber cables shall be located below the electric light or power conductors.

(2) Attachment to Cross-Arms.

Attachment of outside plant optical fiber cables to a cross-arm that carries electric light or power conductors shall not be permitted.

(3) Climbing Space.

The climbing space through outside plant optical fiber cables shall comply with the requirements of 225.14(B).

(4) Clearance.

Supply service drops and sets of overhead service conductors of 0 volts to 750 volts running above and parallel to optical fiber cable service drops shall have a minimum separation of 300 mm (12 in.) at any point in the span, including the point of their attachment to the building. Clearance of not less than 1.0 m (40 in.) shall be maintained between the two services at the pole.

(B) Above Roofs.

Outside plant optical fiber cables shall have a vertical clearance of not less than 2.5 m (8 ft) from all points of roofs above which they pass.

Exception No. 1: The requirement of 770.44(B) shall not apply to auxiliary buildings such as garages and the like.

Exception No. 2: A reduction in clearance above only the overhanging portion of the roof to not less than 450 mm (18 in.) shall be permitted if the following applies:

(1) Not more than 1.2 m (4 ft) of optical fiber cable service drop cable passes above the roof overhang.

(2) The cable is terminated at a through- or above-the-roof raceway or approved support.

Exception No. 3: Where the roof has a slope of not less than 100 mm in 300 mm (4 in. in 12 in.), a reduction in clearance to not less than 900 mm (3 ft) shall be permitted.

Informational Note: See ANSI/IEEE C2-2017, *National Electric Safety Code, Part 2, Safety Rules for Overhead Lines*, for additional information regarding overhead wires and cables.

~~722~~ 822 .167 Underground Optical Fiber Cables Entering Buildings.

Underground optical fiber cables entering buildings shall comply with 722.167(A) and 722.167(B).

(A) Underground Systems with Electric Light, Power, Class 1, or Non-Power-Limited Fire Alarm Circuit Conductors.

Underground conductive optical fiber cables entering buildings with electric light, power, Class 1, or non-power-limited fire alarm circuit conductors in a raceway, handhole enclosure, or manhole shall be located in a section separated from such conductors by means of brick, concrete, or tile partitions or by means of a suitable barrier.

(B) Direct-Buried Cables and Raceways.

Direct-buried conductive optical fiber cables shall be separated by at least 300 mm (12 in.) from conductors of any electric light, power, non-power-limited fire alarm circuit conductors, or Class 1 circuit.

Exception No. 1: Separation shall not be required where the electric service conductors are installed in raceways or have metal cable armor.

Exception No. 2: Separation shall not be required where electric light or power branch-circuit or feeder conductors, non-power-limited fire alarm circuit conductors, or Class 1 circuit conductors are installed in a raceway or in metal-sheathed, metal-clad, or Type UF, or Type USE cables.

~~722~~ 822 .168 Unlisted Optical Fiber Cables Entering Buildings.

(A) Conductive and Nonconductive Cables.

Unlisted conductive and nonconductive outside plant optical fiber cables shall be permitted to be installed in building spaces, other than risers, ducts used for environmental air, plenums used for environmental air, and other spaces used for environmental air, where the length of the cable within the building, measured from its point of entrance, does not exceed 15 m (50 ft) and the cable enters the building from the outside and is terminated in an enclosure. The point of entrance shall be permitted to be extended from the penetration of the external wall, roof, or floor slab by continuously enclosing the entrance optical fiber cables in rigid metal conduit (RMC) or intermediate metal conduit (IMC) to the point of emergence.

Informational Note: Splice cases or terminal boxes, both metallic and plastic types, typically are used as enclosures for splicing or terminating optical fiber cables.

(B) Nonconductive Cables in Raceway.

Unlisted nonconductive outside plant optical fiber cables shall be permitted to enter the building from the outside and shall be permitted to be installed in any of the following raceways:

(1) Intermediate metal conduit (IMC)

(2) Rigid metal conduit (RMC)

(3) Rigid polyvinyl chloride conduit (PVC)

(4) Electrical metallic tubing (EMT)

Unlisted nonconductive outside plant cables installed in rigid polyvinyl chloride conduit (PVC) or electrical metallic tubing (EMT) shall not be installed in risers, ducts used for environmental air, plenums used for environmental air, and other spaces used for environmental air.

722.170 Applications of Listed PLFA Cables.

PLFA cables shall comply with the requirements described in Table 722.170 or where cable substitutions are made as shown in 722.172. Where substitute cables are installed, the wiring requirements of Article 760, Parts I and III shall apply. Types FPLP-CI, FPLR-CI, and FPL-CI cables shall be permitted to be installed to provide 2-hour circuit integrity rated cables.

Table 722.170 Applications of Listed PLFA Cables in Buildings

Applications		-		Cable Type	
		FPLP and FPLP-CI	FPLR and FPLR-CI	FPL and FPL-CI	
In fabricated ducts as described in 720.22(B)	In fabricated ducts	Y	N	N	
	In metal raceway that complies with 720.22(B)	Y	Y	Y	
In other spaces used for environmental air as described in 720.22I	In other spaces used for environmental air	Y	N	N	
	-	In metal raceway that complies with 720.22I	Y	Y	Y
	-	In plenum communications raceways	Y	N	N
	-	In plenum cable routing assemblies	Y	N	N
	-	Supported by open metal cable trays	Y	N	N
	-	Supported by solid bottom metal cable trays with solid metal covers	Y	Y	Y
In risers	In vertical runs	Y	Y	N	
	-	In metal raceways	Y	Y	Y
	-	In fireproof shafts	Y	Y	Y
	-	In plenum communications raceways	Y	Y	N
	-	In plenum cable routing assemblies	Y	Y	N
	-	In riser communications raceways	Y	Y	N
	-	In riser cable routing assemblies	Y	Y	N
	-	In one- and two-family dwellings	Y	Y	Y
Within buildings in other than air-handling spaces and risers	General	Y	Y	Y	
	-	Supported by cable trays	Y	Y	Y
	-	In any raceway recognized in Chapter 3	Y	Y	Y
	-	In plenum communications raceway	Y	Y	Y
	-	In plenum cable routing assemblies	Y	Y	Y
	-	In riser communications raceways	Y	Y	Y

Applications		-		Cable Type	
		FPLP and FPLP-CI	FPLR and FPLR-CI	FPL and FPL-CI	
	-	In riser cable routing assemblies	Y	Y	Y
	-	In general-purpose communications raceways	Y	Y	Y
	-	In general-purpose cable routing assemblies	Y	Y	Y

Note:

"N" indicates that the cable type shall not be permitted to be installed in the application. "Y" indicates that the cable type shall be permitted to be installed in the application subject to the limitations described in 760.133 through 760.145.

722.171 Wiring Methods and Materials on Load Side of the PLFA Power Source.

Fire alarm circuits on the load side of the power source shall be permitted to be installed using wiring methods and materials in accordance with 722.171(A), 722.171(B), or a combination of both. Article 722, Parts I and II shall apply.

(A) PLFA Wiring Methods and Materials.

Power-limited fire alarm conductors and cables described in 722.170 shall be installed as detailed in 722.171(B)(1) through 722.171(B)(4), and 722.172.

(1) In Raceways, Exposed on Ceilings or Sidewalls, or Fished in Concealed Spaces.

Cable splices or terminations shall be made in listed fittings, boxes, enclosures, fire alarm devices, or utilization equipment. Where installed exposed, cables shall be adequately supported and installed such that maximum protection against physical damage is afforded by building construction such as baseboards, door frames, ledges, and so forth. Where located within 2.1 m (7 ft) of the floor, cables shall be securely fastened in an approved manner at intervals of not more than 450 mm (18 in.).

(2) Passing Through a Floor or Wall.

Cables shall be installed in metal raceways or rigid nonmetallic conduit where passing through a floor or wall to a height of 2.1 m (7 ft) above the floor, unless adequate protection can be afforded by building construction such as detailed in 722.171(A)(1) or unless an equivalent solid guard is provided.

(3) Nonconcealed Spaces.

Cables covered by Chapter 3 used for wiring of PLFA circuits and installed in nonconcealed spaces shall comply with the following:

(1) The cables shall be installed in accordance with 722.100(A)(15)(a) and 722.100(A)(15)(b).

(2) Exposed portions of the cable shall have a length not exceeding 3 m (10 ft).

(4) Portable Fire Alarm Systems.

A portable fire alarm system provided to protect a stage or set when not in use shall be permitted to use wiring methods in accordance with 530.12.

(5) PLFA Wired Using NPLFA Wiring Methods and Materials.

NPLFA wiring methods shall be permitted when used in accordance with 760.46, 760.49, or 760.53 for PLFA circuits. Conductors shall be solid or stranded copper. Separation from electric light, power, Class 1, non-power-limited fire alarm circuit conductors, and medium-power network-powered broadband communications cables shall comply with 760.136.

(B) Power-Limited Fire Alarm Conductor Size.

Conductors of 26 AWG shall be permitted only where spliced with a connector listed as suitable for 26 AWG to 24 AWG or larger conductors that are terminated on equipment or where the 26 AWG conductors are terminated on equipment listed as suitable for 26 AWG conductors. Single conductors shall not be smaller than 18 AWG.

(C) Support of Conductors.

Power-limited fire alarm circuit conductors shall not be strapped, taped, or attached by any means to the exterior of any conduit or other raceway as a means of support.

722.172 Permitted Substitutions for Power-Limited Fire Alarm Cables.

The substitutions for fire alarm cables listed in Table 722.172 and illustrated in Figure 722.172 shall be permitted. Where substitute cables are installed, the wiring requirements of Article 760, Parts I and III shall apply.

Informational Note: See 722.100 for information on communications cables (CMP, CMR, CMG, CM).

Table 722.172 Permitted Substitutions for Power-Limited Fire Alarm Cables.

Cable Type	Permitted Substitutions
FPLP	CMP
FPLR	CMP, FPLP, CMR
FPL	CMP, FPLP, CMR, FPLR, CMG, CM

Figure 722.172 Power-Limited Fire Alarm Cable Substitution Hierarchy.

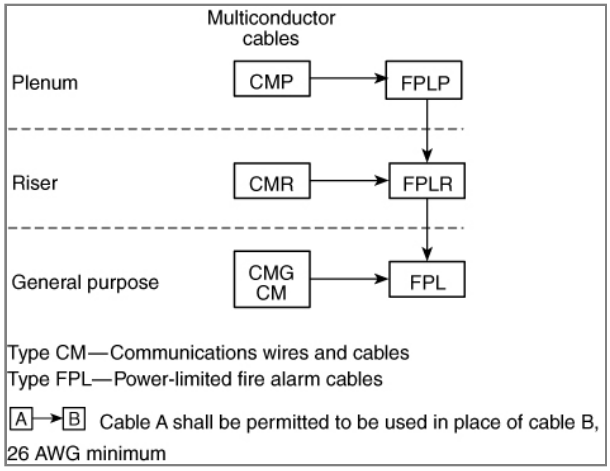

~~722~~ 822 .180 Circuit Integrity (CI) Cable, Fire-Resistive Cable System, or Electrical Circuit Protective System.

(A) General.

CI cable, a fire-resistive cable system, or a listed electrical circuit protective system shall be permitted for use in systems that supply critical circuits to ensure survivability for continued circuit operation for a specified time under fire conditions.

(B) Securing and Supporting.

Circuit integrity type CI cable shall be supported at 610 mm (24 in.) maximum intervals in accordance with the following:

(1) Secured to the noncombustible surface of the building structure

(2) Using steel supports and fasteners

~~722~~ 822 .181 Thermocouple Circuits.

Conductors in Type PLTC cables used for Class 2 thermocouple circuits shall be permitted to be any of the materials used for thermocouple extension wire.

~~722~~ 822 .182 Installation of Circuit Conductors Extending Beyond One Building.

Circuit conductors that extend beyond one building and are run such that they are subject to accidental contact with electric light or power conductors operating over 300 volts to ground, or are exposed to lightning on interbuilding circuits on the same premises, shall comply with the following:

(1) For other than coaxial conductors, 750.48, 750.100, 800.44, 800.50, 800.53, 805.170(A), and 805.170(B)

(2) For coaxial conductors, 750.48(B), 750.75, and 800.44

Statement of Problem and Substantiation for Public Comment

Because this code is to protect people and property this section should be moved to an independent chapter 8. The previous chapters should only apply where referenced. Intrinsically safe cabling, power limited cabling and fiber optic cabling do not pose a threat to ignite fires or harm people or property. There is no justification for keeping this section in chapter 7 and excellent reasons to move it to chapter 8. In the 21st century delivery of communications and limited energy are increasingly important to everyone. by removing the burden of added inspections, licensing and permitting construction costs can be reduced. Locating this section in this chapter does not foster the growth necessary in this century.

Related Public Comments for This Document

Related Comment	Relationship
Public Comment No. 1783-NFPA 70-2024 [Section No. 90.3]	Chapter 8 independence

Related Item

• Article 790 General Requirements for Limited-Energy Systems

Submitter Information Verification

Submitter Full Name: Patrick Mahoney
Organization: AECOM
Street Address:
City:
State:
Zip:

Submittal Date: Tue Aug 27 11:35:10 EDT 2024
Committee: NEC-P03

Public Comment No. 235-NFPA 70-2024 [Article 722]

Article 722 Limited-Energy Cables ~~for Power-Limited Circuits, Fault-Managed-Power Circuits, Optical Fiber Circuits, and Communications Circuits~~

Part I. General

722.1 Scope.

This article covers the general requirements for the installation of ~~single- and multiple-conductor cables used in Class 2 and Class 3 power-~~ limited ~~circuits, power-limited fire alarm (PLFA) circuits, Class 4 fault-managed power circuits, optical fiber cables, and communications systems power-limited, remote-control, and signaling circuits that are not an integral part of a device or utilization equipment installed inside of buildings.~~

~~These general requirements also cover cables used in communications systems and apply to communications circuits, data communications, community antenna television and radio distribution systems, network-powered broadband communications systems, and premises-powered broadband communications systems, unless modified by applicable parts of Articles 800, 810, 820, 830, or 840.~~

~~Informational Note No. 1: See 206.4 for classifications of remote-control and signaling circuits.~~

~~Informational Note No. 2: Class 4 fault-managed power systems consist of a Class 4 power transmitter and a Class 4 power receiver connected by a Class 4 cabling system. These systems are characterized by monitoring the circuit for faults and controlling the source current to ensure the energy delivered into any fault is limited. Class 4 systems differ from Class 1, Class 2, and Class 3 systems in that they are not limited for power delivered to an appropriate load. They are current limited for faults between the Class 4 transmitter and Class 4 receiver.~~

~~Informational Note No. 3: The circuits described herein are characterized by usage and electrical power limitations that differentiate them from electric light and power circuits; therefore, alternative requirements are given regarding minimum wire sizes, ampacity adjustment and correction factors, overcurrent protection, installation requirements, and wiring methods and materials.~~

-energy cables.

THE TEXT CHANGES RECOMMENDED BY THIS PC END HERE.

722.4 Other Articles.

In addition to the requirements of this article, installations of limited-energy and communications wires and cables shall also comply with the following:

(1) Class 2 and Class 3 cables: Article 725, Part II and Article 722, Parts I and II

(2) Class 4 cables: Article 726, Part II and IV and Article 722, Parts I and II

(3) Fire alarm cables: Article 760, Part III

(4) Optical fiber cables: Article 770, Part V

(5) Coaxial cables — installations of premises (within buildings) CATV and radio distribution circuits: Article 820, Part V

722.12 Uses Not Permitted.

Class 4 cables shall not be permitted for any applications that are not part of a Class 4 system.

Exception: Use of Class 4 cable for other applications shall be permitted if the cable has been listed as suitable for the other applications.

722.14 Cables Containing Communications and Power Circuits.

Cables carrying data or communications circuits as well as power circuits shall be classified as electrical power circuits in accordance with the type of electrical power carried.

Exception: PoE circuits shall be permitted to be classified as communications and Class 2 or Class 3.

Informational Note: Communications circuits carrying power in accordance with Article 805, Part II, 820.15 , 830.15 , or 840.160 are considered according to their appropriate article for each type of circuit.

722.27 Temperature Limitation of Limited-Energy and Communications Cables.

No cable shall be used in such a manner that its operating temperature exceeds that of its rating.

722.30 Securing and Supporting.

(A) General.

In addition to the requirements of 720.19 and 720.30 , limited-energy and communications cables shall be installed in accordance with 722.30(A)(1) and 722.30(A)(2) .

(1) Supporting.

Cables installed exposed on the surface of ceilings and sidewalls shall be supported by the building structure in such a manner that the cable will not be damaged by normal building use.

(2) Securing.

Such cables shall be secured by hardware, including straps, staples, cables ties listed and identified for securement and support, and hangers, or similar fittings designed and installed so as not to damage the cable.

(B) Spaces Used for Environmental Air (Plenums).

Limited-energy and communications cables installed in other spaces used for environmental air (plenums) shall be secured and supported in accordance with 720.30(G) .

Part II. Listing and Marking Requirements

722.100 Listing of Limited-Energy and Communications Cables.

Cables installed in buildings shall be listed in accordance with 722.100(A)(1) through 722.100(A)(16) .

Exception No. 1: Optical fiber cables that are installed in compliance with 722.168 shall not be required to be listed.

Exception No. 2: Cables installed in compliance with 800.48 shall not be required to be listed.

(A) Listing of Cables.

Cables installed as wiring methods within buildings shall be listed as resistant to the spread of fire and other criteria in accordance with 722.100(A)(1) through 722.100(A)(16) .

Informational Note No. 1: See UL 13, *Standard for Power-Limited Circuit Cables* , for applicable requirements for listing of Class 2 and Class 3 cable and power-limited tray cable (PLTC).

Informational Note No. 2: See UL 1424, *Cables for Power-Limited Fire-Alarm Circuits* , for applicable requirements for listing of power-limited fire alarm cable.

Informational Note No. 3: See UL 1651, *Optical Fiber Cable* , for applicable requirements for listing of optical fiber cable.

Informational Note No. 4: See UL 1400-2, *Outline for Fault-Managed Power Systems — Part 2: Requirements for Class 4 Cables* , for applicable requirements for listing of Class 4 cable.

(1) Plenum Cable.

Plenum cable shall be listed as suitable for use in ducts, plenums, and other space for environmental air and shall be listed as having adequate fire-resistant and low-smoke producing characteristics. Plenum cable types shall be identified in Table 722.102(A) .

Informational Note: See NFPA 262-2023, *Standard Method of Test for Flame Travel and Smoke of Wires and Cables for Use in Air-Handling Spaces* , for the test method used to determine that a cable is low-smoke producing and fire resistant, exhibiting a maximum peak optical density of 0.50 or less, an average optical density of 0.15 or less, and a maximum flame spread distance of 1.52 m (5 ft) or less.

(2) Riser Cable.

Riser cable shall be listed as suitable for use in a vertical run in a shaft or from floor to floor and shall be listed as having fire-resistant characteristics capable of preventing the carrying of fire from floor to floor.

Informational Note: See ANSI/UL 1666-2012, *Test for Flame Propagation Height of Electrical and Optical-Fiber Cable Installed Vertically in Shafts* , for the cable requirements defining fire-resistant characteristics capable of preventing the carrying of fire from floor to floor.

(3) General-Purpose Cable.

General-purpose cable shall be listed as resistant to the spread of fire and as suitable for general-purpose use, except for use in risers, ducts, plenums, and other space used for environmental air.

Informational Note: See UL 2556, *Wire and Cable Test Methods* , for defining *resistant to the spread of fire* . One method is to demonstrate that the cables do not spread fire to the top of the tray in the UL Flame Exposure, Vertical Tray Flame Test. The smoke measurements in the test method are not applicable. A method of defining *resistant to the spread of fire* is for the damage (char length) not to exceed 1.5 m (4 ft 11 in.) when performing the FT4 Vertical Flame Test.

(4) Alternative General-Purpose Cable.

Alternative general-purpose optical fiber cable shall be listed as suitable for general-purpose use, with the exception of risers and plenums, and shall also be resistant to the spread of fire.

Informational Note: See CSA C22.2 No. 0.3-M-2001, *Test Methods for Electrical Wires and Cables* , for the CSA Vertical Flame Test — cables in cable trays, that can also be used to define *resistant to the spread of fire* when the damage (char length) does not exceed 1.5 m (4 ft 11 in.).

(5) Limited-Use Cable.

Limited-use cable shall be listed as suitable for use in dwellings and raceways and shall be listed as resistant to flame spread.

Informational Note: See ANSI/UL 2556, *Standard for Wire and Cable Test Methods* , for one method of determining that cable is resistant to flame spread by testing the cable to the FV-2/VW-1 test.

(6) Type PLTC.

Type PLTC nonmetallic-sheathed, power-limited tray cable shall be listed as being suitable for cable trays, resistant to the spread of fire, and sunlight- and moisture-resistant. Type PLTC cable used in a wet location shall be listed for use in wet locations and marked “wet” or “wet location.”

Informational Note: See ANSI/UL 1685-2010, *Standard for Safety for Vertical-Tray Fire-Propagation and Smoke-Release Test for Electrical and Optical-Fiber Cables* , for the UL Flame Exposure, Vertical Tray Flame Test that is used to determine resistance to the spread of fire when cables do not spread fire to the top of the tray. The smoke measurements in the test method are not applicable. See CSA C22.2 No. 0.3-M-2001, *Test Methods for Electrical Wires and Cables* , for the CSA Vertical Flame Test — cables in cable trays that can also be used to define *resistant to the spread of fire* when the damage (char length) does not exceed 1.5 m (4 ft 11 in.).

(7) Circuit Integrity (CI) Cable, Fire-Resistive Cable System, or Electrical Circuit Protective System.

Cables that are used for survivability of critical circuits under fire conditions shall comply with 722.100(A)(7)(a) , 722.100(A)(7)(b) , or 722.100(A)(7)(c) .

Informational Note: See *NFPA 72* -2025, *National Fire Alarm and Signaling Code* , 12.4.3 and 12.4.4 for additional information on fire alarm CI cable, fire-resistive cable systems, or electrical circuit protective systems used for fire alarm circuits to comply with the survivability requirements to maintain the circuit’s electrical function during fire conditions for a defined period of time.

(a) *CI Cables.* CI cables of the types specified in 722.100(A)(1) , 722.100(A)(2) , 722.100(A)(3) , 722.100(A)(4) , and 722.100(A)(6) and used for survivability of critical circuits shall be marked with the additional classification using the suffix “CI.” To maintain its listed fire-resistive rating, CI cable shall only be installed in free air in accordance with 722.180(B) . CI cables shall only be permitted to be installed in a raceway where specifically listed and marked as part of a fire-resistive cable system as covered in 722.100(A)(7)(b) .

Informational Note: See UL 2196, *Fire Test for Circuit Integrity of Fire-Resistive Power, Instrumentation, Control and Data Cables* , and UL 1425, *Cables for Non–Power-Limited Fire-Alarm Circuits* , for information on establishing a rating for CI cable. The *UL Guide Information for Nonpower-limited Fire Alarm Circuits (HNHT)* contains information to identify the cable and its installation limitations to maintain the fire-resistive rating.

(b) *Fire-Resistive Cables.* Fire-resistive cables of the types specified in 722.100(A)(1) , 722.100(A)(2) , 722.100(A)(3) , 722.100(A)(4) , 722.100(A)(6) , and 722.100(A)(7)(a) that are part of a fire-resistive cable system shall be identified with the system identifier and hourly rating marked on the protectant or the smallest unit container and installed in accordance with the listing of the system.

Informational Note: See UL 2196, *Fire Test for Circuit Integrity of Fire-Resistive Power, Instrumentation, Control and Data Cables* , for information on establishing a rating for a fire-resistive cable system. The *UL Guide Information for Electrical Circuit Integrity Systems (FHIT)* contains information to identify the system and its installation limitations to maintain a minimum fire-resistive rating.

(c) *Electrical Circuit Protective System.* Protectants for cables of the types specified in 722.100(A)(1) , 722.100(A)(2) , 722.100(A)(3) , 722.100(A)(4) , and 722.100(A)(6) that are part of an electrical circuit protective system shall be identified with the protective system identifier and hourly rating marked on the protectant or the smallest unit container and installed in accordance with the listing of the protective system.

Informational Note: See UL 1724, *Fire Tests for Electrical Circuit Protective Systems* , for information on establishing a rating for an electrical circuit protective system. The *UL Guide Information for Electrical Circuit Integrity Systems (FHIT)* contains information to identify the system and its installation limitations to maintain the fire-resistive rating.

(8) Class 3 Single Conductors.

Class 3 single conductors used as other wiring within buildings shall be listed Type CL3 and shall not be smaller than 18 AWG.

Informational Note: See ANSI/UL 1685-2010, *Standard for Safety for Vertical-Tray Fire-Propagation and Smoke-Release Test for Electrical and Optical-Fiber Cables*, for the UL Flame Exposure, Vertical Tray Flame Test that is used to determine resistance to the spread of fire when cables do not spread fire to the top of the tray. The smoke measurements in the test method are not applicable. See CSA C22.2 No. 0.3-M-2001, *Test Methods for Electrical Wires and Cables*, for the CSA Vertical Flame Test — cables in cable trays that can also be used to define *resistant to the spread of fire* when the damage (char length) does not exceed 1.5 m (4 ft 11 in.).

(9) Limited Power (LP) Cable.

Class 2 and Class 3 LP cables shall be listed as suitable for carrying power and data up to a specified current limit for each conductor without exceeding the temperature rating of the cable. The cables shall be marked with the suffix "-LP (XXA)" where XXA designates the current limit in amperes per conductor.

Informational Note: An example of the marking on 23 AWG, 4-pair, Class 2 cable rated 75°C (167°F) with an LP current rating of 0.6 amperes per conductor is "CL2-LP (0.6A) 75°C 23 AWG 4-pair."

(10) Under-Carpet Cables.

Under-carpet cable shall be listed as suitable for use under carpet, floor covering, modular tiles, and planks.

Informational Note: See UL 444, *Standard for Safety for Communications Cables*, for the compressive loading test used to determine the suitability of cable for under-carpet use.

(11) Wet Locations.

Cable used in a wet location shall be listed for use in wet locations and be marked "wet" or "wet location" or have a moisture-impervious metal sheath.

(12) Field-Assembled Optical Fiber Cables.

Field-assembled optical fiber cable shall comply with 722.100(A)(12)(a) through 722.100(A)(12)(d).

(1) The specific combination of jacket and optical fibers intended to be installed as a field-assembled optical fiber cable shall be one of the types in 722.100(A)(1), 722.100(A)(2), or 722.100(A)(3) and shall be marked in accordance with Table 722.102(A).

(2) The jacket of a field-assembled optical fiber cable shall have a surface marking indicating the specific optical fibers with which it is identified for use.

(3) The optical fibers shall have a permanent marking, such as a marker tape, indicating the jacket with which they are identified for use.

(4) The jacket without fibers shall meet the listing requirements for communications raceways in 722.110 and 722.111 in accordance with the cable marking.

(13) Cables Containing Optical Fibers.

Composite optical fiber cables shall be listed as electrical cables based on the type of electrical conductors.

(14) Class 2 and Class 3 Cable Voltage and Temperature Ratings.

Class 2 cables shall have a voltage rating of not less than 150 volts. Class 3 cables shall have a voltage rating of not less than 300 volts. Class 2 and Class 3 cables shall have a temperature rating of not less than 60°C (140°F).

(15) Power-Limited Fire Alarm (PLFA) Cables.

PFLA cables shall comply with 722.100(A)(15)(a) through 722.100(A)(15)(d).

(1) Conductors for cables, other than coaxial cables, shall be solid or stranded copper. Coaxial cables shall be permitted to use 30 percent conductivity copper-covered steel center conductor wire.

(2) The size of conductors in a multiconductor cable shall not be smaller than 26 AWG. Single conductors shall not be smaller than 18 AWG. Conductors of 26 AWG shall be permitted only where spliced with a connector listed as suitable for 26 AWG to 24 AWG or larger conductors that are terminated on equipment or where the 26 AWG conductors are terminated on equipment listed as suitable for 26 AWG conductors.

(3) Cables shall have a voltage rating of not less than 300 volts.

(4) Cables shall have a temperature rating of not less than 60°C (140°F).

(16) Class 4 Cable Construction.

(a) *Sizes.* Conductors of sizes not smaller than 24 AWG shall be permitted to be used.

(b) *Insulation.* Insulation on conductors shall be rated not less than 450 volts dc.

(c) *Voltage Rating.* Cables shall have a voltage rating of not less than 450 volts dc. Voltage ratings shall not be marked on the cables.

(d) *Temperature Rating.* Cables shall have a temperature rating of not less than 60°C (140°F).

722.102 Marking of Listed Limited-Energy and Communications Cables.

(A) General.

Cables installed in buildings shall be marked in accordance with 722.102(A), and they shall be permitted to be marked in accordance with 722.102(B) .

Cables shall be durably marked on the surface in accordance with the following:

(1) The AWG size or circular mil area shall be repeated at intervals not exceeding 610 mm (24 in.).

(2) All other markings shall be repeated at intervals not exceeding 1.0 m (40 in.).

(3) The proper type designation for the type of cable shall be marked in accordance with Table 722.102(A) .

(4) The manufacturer's name, trademark, or other distinctive marking by which the organization responsible for the product can be readily identified shall be marked.

(5) The AWG size or circular mil area shall be marked.

Informational Note No. 1: See Chapter 9, Table 8 for conductor area expressed in SI units for conductor sizes specified in AWG or circular mil area.

(6) The temperature rating for a temperature rating exceeding 60°C (140°F) shall be marked.

Informational Note No. 2: A minimum temperature rating of 60°C (140°F) is assumed for cables not marked with a temperature rating.

(7) Voltage ratings shall not be marked on the cables.

Exception: Voltage markings shall be permitted where the cable has multiple listings, and a voltage marking is required for one or more of the listings.

Informational Note No. 3: Voltage markings on cables could be misinterpreted to suggest that the cables may be suitable for Class 1 electric light and power applications.

Informational Note No. 4: Cable types are listed in descending order of fire resistance rating.

Table 722.102(A) Cable Type Markings

Cable Type	Cable Marking
Class 4 plenum cable	CL4P
Class 3 plenum cable	CL3P
Class 2 plenum cable	CL2P
Power-limited fire alarm plenum cable	FPLP
Nonconductive optical fiber plenum cable	OFNP
Conductive optical fiber plenum cable	OFCP
Class 4 riser cable	CL4R
Class 3 riser cable	CL3R
Class 2 riser cable	CL2R
Power-limited fire alarm riser cable	FPLR
Nonconductive optical fiber riser cable	OFNR
Conductive optical fiber riser cable	OFCR
Class 4 general-purpose cable	CL4
Class 3 general-purpose cable	CL3
Class 2 general-purpose cable	CL2
Class 4 outdoor-only use cable	CL4Z
Power-limited fire alarm cable	FPL
Nonconductive general-purpose optical fiber cable	OFN
Conductive general-purpose optical fiber cable	OFC
Alternative nonconductive general-purpose optical fiber cable	OFNG
Alternative conductive general-purpose optical fiber cable	OFCG
Class 3 cable — limited use	CL3X
Class 2 cable — limited use	CL2X
Under-carpet cable	CMUC

Note: All types of CL2, CL3, CL4, and FPL cables containing optical fibers are provided with the suffix "-OF."

(B) Optional Markings.

Cables shall be permitted to be surface marked to indicate special characteristics of the cable materials.

Informational Note No. 1: Examples of these characteristics include, but are not limited to, limited smoke, halogen free, low smoke and halogen free, and sunlight resistant.

Informational Note No. 2: Some examples of optional markings are ST1 to indicate limited smoke characteristics. See UL 2556, *Wire and Cable Test Methods* , HF to indicate halogen free. See in UL 2885, *Outline of Investigation for Acid Gas, Acidity and Conductivity of Combusted Materials* , and LSHF to indicate halogen free and low-smoke characteristics. See IEC 61034-2, *Measurement of smoke density of cables burning under defined conditions — Part 2: Test procedure and requirements* .

Part III. Wiring Methods, Applications and Installations Inside Buildings

722.110 Application and Installation of Raceways, Cable Routing Assemblies, and Cable Trays.

(A) Application of Listed Communications Raceways in Buildings.

Permitted and nonpermitted applications of listed communications raceways shall be in accordance with Table 722.110(A) .

Table 722.110(A) Applications of Listed Communications Raceways in Buildings.

Applications		Listed Communications Raceway Type		
		Plenum	Riser	General-Purpose
In ducts specifically fabricated for environmental air as described in 720.22(B)	In fabricated ducts	N	N	N
	In metal raceway that complies with 300.25(B)	N	N	N
In other spaces used for environmental air (plenums) as described in 720.22(C)	In other spaces used for environmental air	Y	N	N
	In metal raceway that complies with 300.25(C)	Y	Y	Y
	In plenum cable routing assemblies	N	N	N
	Supported by open metal cable trays	Y	N	N
	Supported by solid bottom metal cable trays with solid metal covers	Y	Y	Y
In risers	In vertical runs	Y	Y	N
	In metal raceways	Y	Y	Y
	In fireproof shafts	Y	Y	Y
	In plenum cable routing assemblies	N	N	N
	In riser cable routing assemblies	N	N	N
	In one- and two-family dwellings	Y	Y	Y
Within buildings in other than air-handling spaces and risers	General	Y	Y	Y
	In one- and two-family dwellings	Y	Y	Y
	In multifamily dwellings	Y	Y	Y
	In nonconcealed spaces	Y	Y	Y
	Supported by cable trays	Y	Y	Y
	Under carpet, modular flooring, and planks	N	N	N
	In distributing frames and cross-connect arrays	Y	Y	Y
	In any raceway recognized in Chapter 3	Y	Y	Y
	In plenum cable routing assemblies	N	N	N
	In riser cable routing assemblies	N	N	N
	In general-purpose cable routing assemblies	N	N	N

Note: An “N” in the table indicates that the communications raceway type shall not be installed in the application. A “Y” indicates that the communications raceway type shall be permitted to be installed in the application, subject to the limitations described in 722.111 and 722.131.

(B) Application of Listed Cable Routing Assemblies.

Permitted and nonpermitted applications of listed cable routing assemblies shall be in accordance with Table 722.110(B) .

Table 722.110(B) Applications of Listed Cable Routing Assemblies in Buildings.

Applications		Listed Cable Routing Assembly Type		
		Plenum	Riser	General-Purpose
In ducts specifically fabricated for environmental air as described in 720.22(B)	In fabricated ducts	N	N	N
	In metal raceway that complies with 300.25(B)	N	N	N
In other spaces used for environmental air (plenums) as described in 720.22(C)	In other spaces used for environmental air	Y	N	N
	In metal raceway that complies with 300.25(C)	Y	Y	Y
	In plenum cable routing assemblies	N	N	N
	Supported by open metal cable trays	Y	N	N
	Supported by solid bottom metal cable trays with solid metal covers	Y	Y	Y
In risers	In vertical runs	Y	Y	N
	In metal raceways	Y	Y	Y

In fireproof shafts	Y	Y	Y

In plenum cable routing assemblies	N	N	N

In riser cable routing assemblies	N	N	N

	In one- and two-family dwellings	Y	Y	Y
Within buildings in other than air-handling spaces and risers	General	Y	Y	Y
	In one- and two-family dwellings	Y	Y	Y
	In multifamily dwellings	Y	Y	Y
	In nonconcealed spaces	Y	Y	Y
	Supported by cable trays	Y	Y	Y
	Under carpet, modular flooring, and planks	N	N	N
	In distributing frames and cross-connect arrays	Y	Y	Y
	In any raceway recognized in Chapter 3	Y	Y	Y
	In plenum cable routing assemblies	N	N	N
	In riser cable routing assemblies	N	N	N
	In general-purpose cable routing assemblies	N	N	N

Note: An “N” in the table indicates that the cable routing assembly type shall not be installed in the application. A “Y” indicates that the cable routing assembly type shall be permitted to be installed in the application subject to the limitations described in 722.131.

722.111 Installation of Raceways, Cable Routing Assemblies, and Cable Trays.

(A) Types of Raceways.

Wires and cables shall be permitted to be installed in raceways that comply with 722.111(A)(1) , 722.111(A)(2) , or 722.111(A)(3) . Medium-power network-powered broadband communications cables shall not be installed in raceways that comply with 722.111(A)(2) .

(1) Permitted Raceways.

Wires and raceways shall be permitted to be in any raceway included in Chapter 3. The raceways shall be installed in accordance with Chapter 3.

(2) Communications Raceways.

Wires and cables shall be permitted to be installed in plenum communications raceways, riser communications raceways, and general-purpose communications raceways selected in accordance with Table 722.110(A) , listed in accordance with 722.110(A) , and installed in accordance with 722.131 and 362.24 through 362.56, where the requirements applicable to electrical nonmetallic tubing (ENT) apply.

(3) Innerduct for Communications Wires and Cables, Coaxial Cables, or Network-Powered Broadband Communications Cables.

Listed plenum communications raceways, listed riser communications raceways, and listed general-purpose communications raceways selected in accordance with Table 722.110(A) shall be permitted to be installed as innerduct in any type of listed raceway permitted in Chapter 3.

(4) Raceway Fill.

The raceway fill requirements of 720.6(B)(1) shall apply to medium-power network-powered broadband communications cables.

(5) Permitted Substitutions.

Substitutions of listed communications raceways shall be permitted in accordance with Table 722.111(A)(5) .

Table 722.111(A)(5) Permitted Substitutions of Listed Communications Raceways

Raceway Type	Permitted Substitution
Riser communications raceway	Plenum communications raceway
General purpose communications raceway	Plenum communications raceway, riser communications raceway

(B) Cable Routing Assemblies.

Cables shall be permitted to be installed in plenum cable routing assemblies, riser cable routing assemblies, and general-purpose cable routing assemblies selected in accordance with Table 722.110(B) , listed in accordance with 722.110(B) , and installed in accordance with 722.111(B)(1) , 722.111(B)(2) , and 722.131 .

(1) Horizontal Support.

Cable routing assemblies shall be supported where run horizontally at intervals not to exceed 900 mm (3 ft) and at each end or joint, unless listed for other support intervals. In no case shall the distance between supports exceed 3 m (10 ft).

(2) Vertical Support.

Vertical runs of cable routing assemblies shall be supported at intervals not exceeding 1.2 m (4 ft), unless listed for other support intervals, and shall not have more than one joint between supports.

(3) Permitted Substitutions.

Substitutions of listed cable routing assemblies shall be permitted in accordance with Table 722.111(B)(3) .

Table 722.111(B)(3) Permitted Substitutions of Listed Communications Raceways

Raceway Type	Permitted Substitution
Riser communications raceway	Plenum communications raceway
General purpose communications raceway	Plenum communications raceway, riser communications raceway

(C) Cable Trays.

Wires and cables and communications raceways shall be permitted to be installed in metal or listed nonmetallic cable tray systems. Ladder cable trays shall be permitted to support cable routing assemblies.

722.112

Table 722.112 Limited-Energy Cable Type

Plenum limited-energy cables	CMP	Communications plenum cables
	CATVP	Community antenna television plenum cables
	BLP	Network-powered broadband communications low-power plenum cables
	FPLP	Power-limited fire alarm plenum cables
	CL4P	Class 4 plenum cables
	CL3P	Class 3 plenum cables
	CL2P	Class 2 plenum cables
	OFNP	Nonconductive optical fiber plenum cables
	OFCP	Conductive optical fiber plenum cables
Riser limited-energy cables	CMR	Communications riser cables
	CATVR	Community antenna television riser cables
	BLR	Network-powered broadband communications low-power riser cables
	FPLR	Power-limited fire alarm riser cables
	CL4R	Class 4 riser cables
	CL3R	Class 3 riser cables
	CL2R	Class 2 riser cables
	OFNR	Nonconductive optical fiber riser cables
	OFCR	Conductive optical fiber riser cables
General-purpose limited-energy cables	CMG, CM	Communications general-purpose cables
	CATV	Community antenna television general-purpose cables
	BL	Network-powered broadband communications low-power general-purpose cables
	FPL	Power-limited fire alarm general-purpose cables
	CL4	Class 4 general-purpose cables
	PLTC	Power-limited tray cables
	CL3	Class 3 general-purpose cables
	CL2	Class 2 general-purpose cables
	OFNG, OFN	Nonconductive optical fiber general-purpose cables
	OFCG, OFC	Conductive Optical Fiber general-purpose cables
Limited-use limited-energy cables	CMX	Communications limited use cables

	CATVX	Community antenna television limited use cables
	BLX	Network-powered broadband communications low-power limited use cables
	CL3X	Class 3 limited use cables
	CL2X	Class 2 limited use cables
Specialty use limited-energy cables	CMUC	Under-carpet communications wires and cables

(A) General.

Unless prohibited by this section, plenum, riser, general-purpose, and limited-use limited-energy cables shall be permitted to be installed in the same raceway, cable tray, box, enclosure, or cable routing assembly. Installations shall comply with 722.112(B) through 722.112(H) .

(B) Two or More Class 2, Class 3, or Class 4 Circuits.

Conductors of two or more limited energy circuits of the same class shall be permitted within the same limited energy cable.

(C) (C) Class 2, Class 3, and Class 4 Circuits with the Same Limited Energy Cable.

(1) Class 3 Cables.

Class 2 circuits shall be permitted to use listed Class 3 cables.

(2) Dual-Listed Class 3/Class 4 Cables.

Class 2 and Class 3 circuits shall be permitted to use dual-listed Class 3/Class 4 cables.

(D) Class 2 and Class 3 Circuits with Communications Circuits.

(1) Communications Cables.

Conductors of one or more Class 2 or Class 3 circuits shall be permitted in the same cable with conductors of communications circuits. The cable shall be listed as a communications cable.

(2) Composite Cables.

Cables constructed of individually listed Class 2, Class 3, and communications cables under a common jacket shall be permitted to be classified and listed as communications cables. The fire resistance rating of the composite cable shall be determined by the combustion characteristics of the composite cable.

(E) Class 2, Class 3, or Class 4 Cables with Other Limited Energy Cables.

(1) Limited-Use Cables.

Plenum, riser, general-purpose, and limited use limited energy cables shall be permitted in the same enclosure or raceway.

(2) Other Than Limited-Use Cables.

Plenum, riser, and general-purpose limited energy cables shall be permitted in the same enclosure, cable tray, raceway, or cable routing assembly.

(F) Power-Limited Fire Alarm Circuits.

(1) Multiple PLFA Circuits.

Cable and conductors of two or more power-limited fire alarm circuits shall be permitted within the same cable, enclosure, cable tray, raceway, or cable routing assembly.

(2) With Network-Powered Broadband.

Low-power network-powered broadband communications circuits shall be permitted in the same enclosure, cable tray, raceway, or cable routing assembly with PLFA cables.

(3) With Class 2 Circuits.

Conductors of one or more Class 2 circuits shall be permitted within the same cable, enclosure, cable tray, raceway, or cable routing assembly with conductors of power-limited fire alarm circuits if the insulation of the Class 2 circuit conductors in the cable, enclosure, raceway, or cable routing assembly is at least that required by the power-limited fire alarm circuits.

(4) With Class 3 or Communications Circuits.

Cable and conductors of Class 3 and communications circuits shall be permitted within the same cable, enclosure, cable tray, raceway, or cable routing assembly with cables and conductors of power-limited fire alarm circuits.

(5) With 4 Circuits.

Class 4 circuits shall be permitted in the same cable with power-limited fire alarm circuits if the cable is dual-listed.

(6) Audio System Circuits and PLFA Circuits.

Audio system circuits described in 640.9(C) and installed using Class 2, Class 3, or Class 4 wiring methods in compliance with 722.136 shall not be installed in the same cable, cable tray, raceway, or cable routing assembly with PLFA circuits or cables.

(G) Manholes.

Outside plant communications, CATV, and optical fiber cables shall be permitted to be installed together in manholes.

Informational Note: See IEEE C2-2023, *National Electrical Safety Code*, Rules 323 and 341 for information on cable installation in manholes.

(H) Limited-Use and Under-Carpet Limited-Energy Cables.

Limited-use and under-carpet limited-energy cables shall not be installed in cable trays or cable routing assemblies.

722.113 Limited-Energy Circuits with Electric Light, Power, Class 1, Non-Power-Limited Fire Alarm, and Medium-Power Network-Powered Broadband Communications Circuits in Raceways, Compartments, and Boxes.

Separation shall be provided in accordance with 722.112(A) for limited energy cables and conductors, except as provided in 722.164 for optical fiber cables.

(A) General.

Limited energy cables shall be separated by at least 50 mm (2 in.) from conductors of any electric light, power, Class 1, non-power-limited fire alarm, or medium-power network-powered broadband communications circuits and shall not be placed the same raceway, compartment, enclosure, manhole, outlet box, device box, or similar, unless permitted by the 722.113(A)(1) through 722.113(A)(10) .

Exception: Low-power and medium-power network-powered broadband communications circuit cables shall be permitted in the same raceway, cable tray, box, enclosure, or cable routing assembly.

(1) Separated by Barriers.

Limited energy cables shall be permitted to be placed in any raceway, compartment, outlet box, junction box, or other enclosure with conductors of electric light, power, Class 1, non-power-limited fire alarm, or medium-power network-powered broadband communications circuits if the conductors of electric light, power, Class 1, non-power-limited fire alarm, and medium-power network-powered broadband communications circuits are separated from the limited energy and cables by a permanent barrier that maintains the 50 mm (2 in.) separation or a listed divider.

(2) Raceways Within Enclosures.

Limited energy cables shall be permitted to share the same enclosure with other systems if the limited energy cables are separated by a raceway within the enclosure.

(3) Associated Systems Within Enclosures.

Limited energy cables shall be permitted to be placed in outlet boxes, junction boxes, compartments, or similar with power conductors where such conductors are introduced solely for power supply to the limited energy equipment and 722.113(A)(3)(a) or 722.113(A)(3)(b) applies.

(a) The power circuit conductors shall be routed within the enclosure to maintain a minimum 6 mm (0.25 in.) separation from the limited energy cables.

(b) The circuit conductors operate at 150 volts or less to ground and the limited energy circuit conductors shall be either of the following:

(3) Installed as a Class 1 circuit

(4) A limited energy cable of CL3, CL3R, CL3P or a permitted substitute and the conductors that emerge from the cable jacket are separated by a minimum 6 mm (0.25 in.) or by a nonconductive barrier from all other conductors

(4) Enclosures with Single Opening.

Circuit conductors of limited energy cables entering compartments, enclosures, device boxes, outlet boxes, or similar shall be permitted to be installed with Class 1, non-power-limited fire alarm, and medium-power network-powered broadband communications circuits where they are introduced solely to connect the equipment connected to the limited energy circuits. If the limited energy circuit conductors must enter an enclosure that is provided with a single opening, they shall be permitted to enter through a single fitting (such as a tee) if the conductors are separated from the conductors of the other circuits by a continuous and firmly fixed nonconductor, such as flexible tubing.

(5) Elevators.

(a) *Traveling Cables* . Separation of circuits shall not be required in elevator traveling cables constructed in accordance with 620.36 .

(b) *Hoistways* . In hoistways, cables shall be installed in rigid metal conduit, rigid nonmetallic conduit, intermediate metal conduit, liquidtight flexible nonmetallic conduit, or electrical metallic tubing. For elevators or similar equipment, these conductors shall be permitted to be installed as provided in 620.21 .

(6) In Raceways or Cables.

Separation shall not be required if either of the following applies:

(1) The conductors of electric light, power, Class 1, non-power-limited fire alarm, and medium-power network-powered broadband communications circuits are in a raceway or in metal-sheathed, metal-clad, nonmetallic-sheathed, Type AC or Type UF cables.

(2) The limited energy cable conductors are installed in a raceway or in metal-sheathed, metal-clad, nonmetallic-sheathed, Type TC, or Type UF cables.

(7) Protected by Firmly Fixed Nonconductors.

Separation shall not be required if the limited energy cables are permanently separated from the conductors of electric light, power, Class 1, non-power-limited fire alarm, and medium-power network-powered broadband communications circuits by a continuous and firmly fixed nonconductor, such as porcelain tubes or flexible tubing, in addition to the insulation on the wire.

(8) Manholes.

Underground limited energy circuit conductors and cables in a manhole shall be permitted to be installed with Class 1, non-power-limited fire alarm, and medium-power network-powered broadband communications circuits if one of the following conditions is met:

(1) The electric light, power, Class 1, non-power-limited fire alarm, and medium-power network-powered broadband communications circuit conductors are in a metal-enclosed cable or Type UF cable.

(2) The limited energy circuit conductors are permanently and effectively separated from the conductors of other circuits by a continuous and firmly fixed nonconductor, such as flexible tubing, in addition to the insulation or covering on the wire.

(3) The limited energy circuit conductors are permanently and effectively separated from conductors of the other circuits and securely fastened to racks, insulators, or other approved supports.

(9) Cable Trays.

Limited energy circuit conductors shall be permitted to be installed in cable trays if the conductors of the electric light, Class 1, and non-power-limited fire alarm circuits are separated by a solid fixed barrier of a material compatible with the cable tray or if the limited energy circuits are installed in Type MC cable.

(10) If Protected.

Limited energy circuits shall be permitted to be installed together with the conductors of electric light, power, Class 1, non-power-limited fire alarm, and medium-power network-powered broadband communications circuits if they are functionally associated and installed using Class 1 wiring methods in accordance with 724.46.

722.120 Application and Installation of Limited Energy Cables in Buildings.

The application and installation of limited-energy cables shall comply with Table 722.120 .

Table 722.120 Applications of Limited-Energy Cables

Applications		Cable Type [1]					
		Plenum	Riser	General-Purpose	Limited-Use	Under Carpet	PLTC
In ducts specifically fabricated for environmental air as described in 720.22(C) [2]	Cables in lengths as short as practicable to perform the required function	Y	N	N	N	N	N
	In metal raceway that complies with 720.22(B)	Y	Y	Y	Y	N	Y
In other spaces used for environmental air (plenums) as described in 720.22(C)	Cables in other spaces used for environmental air	Y	N	N	N	N	N
	Cables in metal raceway that complies with 720.22(C)	Y	Y	Y	Y	N	Y
	Cables in plenum communications raceways	Y	N	N	N	N	N
	Cables in plenum cable routing assemblies	Y	N	N	N	N	N
	Cables supported by open metal cable trays	Y	N	N	N	N	N
	Cables, or cables installed in raceways or cable routing assemblies supported by solid bottom metal cable trays with solid metal covers	Y	Y	Y	Y	N	Y
In risers and vertical runs	Cables in vertical runs penetrating one or more floors and in vertical runs in a shaft	Y	Y	N	N	N	N
	Cables in metal raceways	Y	Y	Y	Y	N	Y
	Cables in fireproof shafts	Y	Y	Y	N	N	Y
	Cables in plenum communications raceways	Y	Y	N	N	N	N
	Cables in plenum cable routing assemblies	Y	Y	N	N	N	N
	Cables in riser communications raceways	Y	Y	N	N	N	N
	Cables in riser cable routing assemblies	Y	Y	N	N	N	N
	Cables in one- and two-family dwellings	Y	Y	Y	Y [3]	N	Y
Cables and innerducts installed in metal raceways in a riser having firestops at each floor [2]	Cables	Y	Y	Y	Y	N	Y
	Cables in plenum communications raceways (innerduct)	Y	Y	Y	Y	N	Y
	Cables in riser communications raceways (innerduct)	Y	Y	Y	Y	N	Y
	Cables in general-purpose communications raceways (innerduct)	Y	Y	Y	Y	N	Y
In fireproof riser shafts having firestops at each floor [2]	Cables	Y	Y	Y	N	N	Y
	Cables in plenum communications raceways or plenum cable routing assemblies	Y	Y	Y	N	N	Y
	Cables in riser communications raceways or riser cable routing assemblies	Y	Y	Y	N	N	Y
	Cables in general-purpose communications raceways or general-purpose cable routing assemblies	Y	Y	Y	N	N	Y
In cable trays	Outdoors	N	N	N	N	N	Y
	Cables, or cables in plenum, riser, or general-purpose communications raceways, installed indoors	Y	Y	Y	N	N	Y
In cross-connect arrays	Cables, and cables in plenum, riser, or general-purpose communications raceways or cable routing assemblies	Y	Y	Y	N	N	Y
In one-, two-, and multifamily dwellings, and in building locations other than the locations covered above	Cables	Y	Y	Y	Y [3]	N	Y
	Cables in plenum, riser, or general-purpose communications raceways or cable routing assemblies, or raceways recognized in Chapter 3	Y	Y	Y	Y	N	Y

Cables in nonconcealed spaces	Y	Y	Y	Y[4]	Y	Y

Under carpet, floor covering, modular flooring, and planks	N	N	N	N	Y	N

[1] "N" indicates that the cable type shall not be installed in the application. "Y" indicates that the cable type shall be permitted to be installed in the application, subject to any limitations described in this article or the articles described in 722.4(C).

[2] In 720.22(B), cables shall be permitted in ducts specifically fabricated for environmental air only if directly associated with the air distribution system.

[3] Limited-use cable shall be permitted to be installed only in one-, two-, and multifamily dwellings and only if the cable is smaller in diameter than 6.35 mm (0.25 in.).

[4] The exposed length of cable shall not exceed 3.05 m (10 ft).

722.121 Installations.

(A) Industrial Establishments.

In industrial establishments where the conditions of maintenance and supervision ensure that only qualified persons service the installation, Type PLTC cable shall be permitted in accordance with either of the following:

(1) Where the cable is not subject to physical damage, Type PLTC cable that complies with the crush and impact requirements of Type MC cable and is identified as Type PLTC-ER for such use shall be permitted to be exposed between the cable tray and the utilization equipment or device. The cable shall be continuously supported and protected against physical damage using mechanical protection such as dedicated struts, angles, or channels. The cable shall be supported and secured at intervals not exceeding 1.8 m (6 ft). Where not subject to physical damage, Type PLTC-ER cable shall be permitted to transition between cable trays and between cable trays and utilization equipment or devices for a distance not to exceed 1.8 m (6 ft) without continuous support. The cable shall be mechanically supported where exiting the cable tray to ensure that the minimum bending radius is not exceeded.

(2) Type PLTC cable, with a metallic sheath or armor in accordance with 722.100(A)(6), shall be permitted to be installed exposed. The cable shall be continuously supported and protected against physical damage using mechanical protection such as dedicated struts, angles, or channels. The cable shall be secured at intervals not exceeding 1.8 m (6 ft).

722.122 Limited-Energy Cable Substitutions.

The substitutions for cables listed in Table 722.120 and illustrated in Figure 722.122 shall be permitted. Where substitute cables are installed, the installation requirements of the articles described in 722.4 shall also apply. CI cables shall be permitted to be installed to provide 2-hour circuit integrity. See 722.180(A) .

Informational Note: See 722.100 for information on Types CMP, CMR, CM, and CMX.

Table 722.122 Permitted Limited-Energy Cable Substitutions

Cable Type	Permitted Substitutions
CL3P	CMP
CL2P	CMP, CL3P
CL3R	CMP, CL3P, CMR
CL2R	CMP, CL3P, CL2P, CMR, CL3R
PLTC	None
CL3	CMP, CL3P, CMR, CL3R, CMG, CM, PLTC
CL2	CMP, CL3P, CL2P, CMR, CL3R, CL2R, CMG, CM, PLTC, CL3
CL3X	CMP, CL3P, CMR, CL3R, CMG, CM, PLTC, CL3, CMX
CL2X	CMP, CL3P, CL2P, CMR, CL3R, CL2R, CMG, CM, PLTC, CL3, CL2, CMX, CL3X
FPLP	CMP
FPLR	CMP, FPLP, CMR
FPL	CMP, FPLP, CMR, FPLR, CMG, CM
OFNP	None
OFCP	OFNP
OFNR	OFNP
OFCR	OFNP, OFCP, OFNR
OFNG, OFN	OFNP, OFNR
OFCG, OFC	OFNP, OFCP, OFNR, OFCR, OFNG, OFN
CMUC	None

Figure 722.122 Limited-Energy and Communications Cable Substitution Hierarchy.

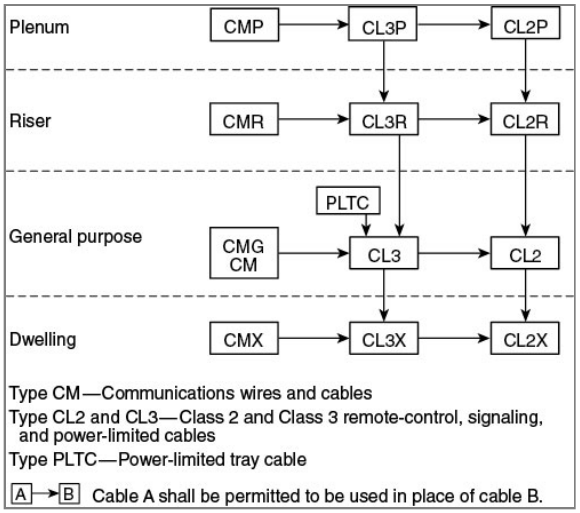

722.130 Application of Cables Used for Communications Circuits, Communications Wires, Cables, and Raceways and Listed Cable Routing Assemblies.

Permitted and nonpermitted applications of listed communications wires and cables, coaxial cables, network-powered broadband communications system cables shall be in accordance with Table 722.130 .

The permitted applications shall be subject to the installation requirements of 722.110 .

Table 722.130 Applications of Listed Communications Wires, Cables, Listed CATV-Type Coaxial Cables, and Listed Network-Powered Broadband Communications Cables in Buildings

Applications		**Wire and Cable Type**									
		Plenum	**Riser**	**BMR**	**General-Purpose**	**BM**	**Limited-Use**	**Under-carpet**	**BMU, BLU**	**Hybrid Power and Communications Cables**	**Communications Wires**
In ducts specifically fabricated for environmental air as described in 720.22(B)	In fabricated ducts	Y	N	N	N	N	N	N	N	N	N
	In metal raceway that complies with 720.22(B)	Y	Y	Y	Y	Y	Y	N	N	N	Y
In other spaces used for environmental air (plenums) as described in 720.22(C)	In other spaces used for environmental air	Y	N	N	N	N	N	N	N	N	N
	In metal raceway that complies with 720.22(C)	Y	Y	Y	Y	Y	Y	N	N	N	Y

In plenum communications raceways	Y	N	N	N	N	N	N	N	N	N

In plenum cable routing assemblies	Y	N	N	N	N	N	N	N	N	N

Supported by open metal cable trays	Y	N	N	N	N	N	N	N	N	N

	Supported by solid bottom metal cable trays with solid metal covers	Y	Y	Y	Y	Y	Y	N	N	N	N
In risers	In vertical runs	Y	Y	Y	N	N	N	N	N	N	N

In metal raceways	Y	Y	Y	Y	Y	Y	N	N	N	N

In fireproof shafts	Y	Y	Y	Y	Y	Y	N	N	N	N

In plenum communications raceways	Y	Y	N	N	N	N	N	N	N	N

In plenum cable routing assemblies	Y	Y	N	N	N	N	N	N	N	N

In riser communications raceways	Y	Y	N	N	N	N	N	N	N	N

In riser cable routing assemblies	Y	Y	N	N	N	N	N	N	N	N

Within buildings in other than air-handling spaces and risers	In one- and two-family dwellings	Y	Y	Y	Y	Y	Y	N	N	Y	N
	General	Y	Y	Y	Y	Y	Y	N	N	N	N
	In one- and two-family dwellings	Y	Y	Y	Y	Y	Y	Y	N	Y	N
	In multifamily dwellings	Y	Y	Y	Y	Y	Y	Y	N	N	N

In nonconcealed spaces	Y	Y	Y	Y	Y	Y	Y	N	N	N

Supported by cable trays	Y	Y	Y	Y	Y	N	N	N	N	N

Under carpet, modular flooring, and planks	N	N	N	N	N	N	Y	N	N	N

In distributing frames and cross-connect arrays	Y	Y	N	Y	N	N	N	N	N	Y
In rigid metal conduit (RMC) and intermediate metal conduit (IMC)	Y	Y	Y	Y	Y	Y	Y	Y	Y	Y
In any raceway recognized in Chapter 3	Y	Y	Y	Y	Y	Y	N	N	N	Y
In plenum communications raceways	Y	Y	N	Y	N	N	N	N	N	Y
In plenum cable routing assemblies	Y	Y	N	Y	N	N	N	N	N	Y
In riser communications raceways	Y	Y	N	Y	N	N	N	N	N	Y
In riser cable routing assemblies	Y	Y	N	Y	N	N	N	N	N	Y
In general-purpose communications raceways	Y	Y	N	Y	N	N	N	N	N	Y
In general-purpose cable routing assemblies	Y	Y	N	Y	N	N	N	N	N	Y

Note: An "N" in the table indicates that the cable type shall not be installed in the application. A "Y" indicates that the cable type shall be permitted to be installed in the application subject to the limitations described in 722.131. The Riser column includes all riser cables except BMR, and the General-Purpose column includes all general-purpose cables except BM.

Informational Note No. 1: Table 722.110 covers the applications of listed communications wires, cables, and raceways in buildings.

Informational Note No. 2: See 722.131(B) for restrictions to the installation of communications cables in fabricated ducts.

722.131 Installation of Cables Used for Communications Circuits, Communications Wires, Cable Routing Assemblies, and Communications Raceways.

(A) General.

Installation of cables used for communications circuits, communications wires, cable routing assemblies, and communications raceways shall comply with 722.131(A) through 722.131(L) . Installation of cable routing assemblies and communications raceways shall comply also with 722.110 . Types of cables used by this section shall be identified in Table 722.131(A) .

Table 722.131(A) Cables Used for Communications Circuits

	Listed Cable Types
Plenum cables	CMP, CATVP, BLP, OFNP, OFCP
Riser cables	CMR, CATVR, BMR, BLR, OFNR, OFCR
General-purpose cables	CMG, CM, CATV, BM, BL, OFNG, OFN, OFCG, OFC
Limited-use cables	CMX, CATVX, BLX
Under-carpet	CMUC
Underground	BMU, BLU

(B) Ducts Specifically Fabricated for Environmental Air.

Installations of cables used for communications circuits, communications wires, cable routing assemblies, and communications raceways in ducts specifically fabricated for environmental air shall be in accordance with 722.131(B)(1) and 722.131(B)(2) .

(1) Uses Permitted.

The following cables shall be permitted in ducts specifically fabricated for environmental air as described in 720.22(B) if they are directly associated with the air distribution system:

(1) Plenum cables up to 1.22 m (4 ft) in length

(2) Plenum, rise, general-purpose, and limited-use cables installed in raceways that are installed in compliance with 720.22(B)

(2) Uses Not Permitted.

The following cables, wires, cable routing assemblies, and communications raceways shall not be permitted in ducts specifically fabricated for environmental air as described in 720.22(B) :

(1) Plenum, riser, and general-purpose communications raceways

(2) Plenum, riser, and general-purpose cable routing assemblies

(3) Riser, general-purpose, and limited-use cables

(4) Type CMUC cables and wires

(5) Types BMU and BLU cables

(6) Communications wires

(7) Hybrid power and communications cables

Informational Note: See NFPA 90A-2024, *Standard for the Installation of Air-Conditioning and Ventilating Systems* , for information on fire protection of wiring installed in fabricated ducts.

(C) Other Spaces Used for Environmental Air (Plenums).

Installations of cables used for communications circuits, communications wires, cable routing assemblies, and communications raceways in other spaces used for environmental air (plenums) shall be in accordance with 722.131(C)(1) and 722.131(C)(2) .

(1) Uses Permitted.

The following cables, wires, cable routing assemblies, and communications raceways shall be permitted in other spaces used for environmental air as described in 720.22(C) :

(1) Plenum cables

(2) Plenum communications raceways

(3) Plenum cable routing assemblies

(4) Plenum cables installed in plenum communications raceways

(5) Plenum cables installed in plenum cable routing assemblies

(6) Plenum cables and plenum communications raceways supported by open metal cable tray systems

(7) Plenum, riser, general-purpose, and limited-use cables, and communications wires installed in raceways that are installed in compliance with 720.22(C)

(8) Plenum, riser, general-purpose, limited-use cables and plenum, riser, and general-purpose communications raceways supported by solid bottom metal cable trays with solid metal covers in other spaces used for environmental air (plenums) as described in 720.22(C)

(9) Plenum, riser, general-purpose, and limited-use cables installed in plenum, riser, and general-purpose communications raceways supported by solid bottom metal cable trays with solid metal covers in other spaces used for environmental air (plenums) as described in 720.22(C)

(2) Uses Not Permitted.

The following cables, wires, cable routing assemblies, and communications raceways shall not be permitted in other spaces used for environmental air as described in 720.22(C) :

(1) Riser, general-purpose, and limited-use cables

(2) Riser and general-purpose communications raceways

(3) Riser and general-purpose cable routing assemblies

(4) Type CMUC cables and wires

(5) Types BMR, BM, BMU, and BLU cables

(6) Communications wires

(7) Hybrid power and communications cables

Informational Note: See NFPA 90A-2024, *Standard for the Installation of Air-Conditioning and Ventilating Systems* , for information on fire protection of wiring installed in other spaces used for environmental air.

(D) Risers — Cables, Cable Routing Assemblies, and Communications Raceways in Vertical Runs.

Installations of cables used for communications circuits, communications wires, cable routing assemblies, and communications raceways in risers shall be in accordance with 722.131(D)(1) and 722.131(D)(2) .

(1) Uses Permitted.

The following cables, cable routing assemblies, and communications raceways shall be permitted in vertical runs penetrating one or more floors and in vertical runs in a shaft:

(1) Plenum and riser cables

(2) Plenum and riser communications raceways

(3) Plenum and riser cable routing assemblies

(4) Plenum and riser cables installed in the following:

(5) Plenum communications raceways

(6) Riser communications raceways

(7) Plenum cable routing assemblies

(8) Riser cable routing assemblies

(2) Uses Not Permitted.

The following cables, wires, cable routing assemblies, and communications raceways shall not be permitted in risers:

(1) General-purpose and limited-use cables

(2) General-purpose communications raceways

(3) General-purpose cable routing assemblies

(4) Type CMUC cables and wires

(5) Types BMR, BM, BMU, and BLU cables

(6) Communications wires

(7) Hybrid power and communications cables

Informational Note: See 720.21 for firestop requirements for floor penetrations.

(E) Risers — Cables and Innerducts in Metal Raceways.

Installations of cables used for communications circuits, communications wires, cable routing assemblies, and communications raceways in metal raceways in a riser having firestops at each floor shall be in accordance with 722.131(E)(1) and 722.131(E)(2) .

(1) Uses Permitted.

The following cables and innerducts shall be permitted in metal raceways in a riser having firestops at each floor:

(1) Plenum, riser, general-purpose, and limited-use cables

(2) Plenum, riser, and general-purpose communications raceways (innerduct)

(3) Plenum, riser, general-purpose, and limited-use cables installed in the following:

(4) Plenum communications raceways (innerduct)

(5) Riser communications raceways (innerduct)

(6) General-purpose communications raceways (innerduct)

(2) Uses Not Permitted.

The following cables, wires, cable routing assemblies, and communications raceways shall not be permitted in metal raceways in a riser having firestops at each floor:

(1) Plenum, riser, and general-purpose cable routing assemblies

(2) Type CMUC cables and wires

(3) Types BMR, BM, BMU, and BLU cables

(4) Communications wires

(5) Hybrid power and communications cables

Informational Note: See 720.21 for firestop requirements for floor penetrations.

(F) Risers — Cables, Cable Routing Assemblies, and Communications Raceways in Fireproof Shafts.

Installations of cables used for communications circuits, communications wires, cable routing assemblies, and communications raceways in fireproof riser shafts having firestops at each floor shall be in accordance with 722.131(F)(1) and 722.131(F)(2) .

(1) Uses Permitted.

The following cables, cable routing assemblies, and communications raceways shall be permitted to be installed in fireproof riser shafts having firestops at each floor:

(1) Plenum, riser, general-purpose, and limited-use cables

(2) Plenum, riser, and general-purpose communications raceways

(3) Plenum, riser, and general-purpose cable routing assemblies

(4) Plenum, riser, general-purpose, and limited-use cables installed in the following:

(5) Plenum communications raceways

(6) Riser communications raceways

(7) General-purpose communications raceways

(8) Plenum cable routing assemblies

(9) Riser cable routing assemblies

(10) General-purpose cable routing assemblies

(2) Uses Not Permitted.

The following cables, wires, cable routing assemblies, and communications raceways shall not be permitted in metal raceways in fireproof riser shafts having firestops at each floor:

(1) Type CMUC cables and wires

(2) Type BMU and BLU cables

(3) Communications wires

(4) Hybrid power and communications cables

Informational Note: See 720.21 for firestop requirements for floor penetrations.

(G) Risers — One- and Two-Family Dwellings.

Installations of cables used for communications circuits, communications wires, cable routing assemblies, and communications raceways in risers in one- and two-family dwellings shafts shall be in accordance with 722.131(G)(1) and 722.131(G)(2) .

(1) Uses Permitted.

The following cables, cable routing assemblies, and communications raceways shall be permitted in one- and two-family dwellings:

(1) Plenum, riser, and general-purpose cables

(2) Limited-use cables less than 6 mm (0.25 in.) in diameter

(3) Plenum, riser, and general-purpose communications raceways

(4) Plenum, riser, and general-purpose cable routing assemblies

(5) Plenum, riser, and general-purpose cables installed in the following:

(6) Plenum communications raceways

(7) Riser communications raceways

(8) General-purpose communications raceways

(9) Plenum cable routing assemblies

(10) Riser cable routing assemblies

(11) General-purpose cable routing assemblies

(2) Uses Not Permitted.

The following cables and wires shall not be permitted in risers in one- and two-family dwellings:

(1) Type CMUC cables and wires

(2) Type BMU and BLU cables

(3) Communications wires

(4) Hybrid power and communications cables

(H) Cable Trays.

Installations of cables used for communications circuits, communications wires, cable routing assemblies, and communications raceways supported by cable trays shall be in accordance with 722.131(H)(1) and 722.131(H)(2) .

(1) Uses Permitted.

The following wires, cables, and communications raceways shall be permitted to be supported by cable trays:

(1) Plenum, riser, and general-purpose cables

(2) Plenum, riser, and general-purpose communications raceways

(3) Communications wires, plenum, riser, and general-purpose cables installed in the following:

(4) Plenum communications raceways

(5) Riser communications raceways

(6) General-purpose communications raceways

(2) Uses Not Permitted.

The following cables and wires shall not be supported by cable trays:

(1) Limited-use cables

(2) Type CMUC cables and wires

(3) Type BMU and BLU cables

(4) Communications wires

(5) Hybrid power and communications cables

(I) Distributing Frames and Cross-Connect Arrays.

Installations of cables used for communications circuits, communications wires, cable routing assemblies, and communications raceways in distributing frames and cross-connect arrays shall be in accordance with 722.131(I)(1) and 722.131(I)(2) .

(1) Uses Permitted.

The following wires, cables, cable routing assemblies, and communications raceways shall be permitted to be installed in distributing frames and cross-connect arrays:

(1) Plenum, riser, general-purpose cables, and communications wires

(2) Plenum, riser, and general-purpose communications raceways

(3) Plenum, riser, and general-purpose cable routing assemblies

(4) Communications wires, plenum, riser, and general-purpose cables installed in the following:

(5) Plenum communications raceways

(6) Riser communications raceways

(7) General-purpose communications raceways

(8) Plenum cable routing assemblies

(9) Riser cable routing assemblies

(10) General-purpose cable routing assemblies

(2) Uses Not Permitted.

The following cables and wires shall not be installed in distributing frames and cross-connect arrays:

(1) Types BMR, BM, BMU, and BLU cables

(2) Limited-use cables

(3) Type CMUC cables and wires

(4) Hybrid power and communications cables

(J) Other Building Locations.

Installations of cables used for communications circuits, cable communications wires, routing assemblies, and communications raceways in building locations other than those covered in 722.131(B) through 722.131(I) shall be in accordance with 722.131(J)(1) and 722.131(J)(2) .

(1) Uses Permitted.

The following wires, cables, cable routing assemblies, and communications raceways shall be permitted to be installed in building locations other than the locations covered in 722.131(B) through 722.131(I) :

(1) Plenum, riser, and general-purpose cables

(2) Limited-use cables with a maximum of 3 m (10 ft) of exposed length in nonconcealed spaces

(3) Plenum, riser, and general-purpose communications raceways

(4) Plenum, riser, and general-purpose cable routing assemblies

(5) Communications wires, plenum, riser, and general-purpose cables installed in the following:

(6) Plenum communications raceways

(7) Riser communications raceways

(8) General-purpose communications raceways

(9) Plenum, riser, and general-purpose cables installed in the following:

(10) Plenum cable routing assemblies

(11) Riser cable routing assemblies

(12) General-purpose cable routing assemblies

(13) Communications wires and plenum, riser, general-purpose, and limited-use cables installed in raceways recognized in Chapter 3

(14) Type CMUC under-carpet communications wires and cables installed under carpet, modular flooring, and planks.

(2) Uses Not Permitted.

The following cables, wires, cable routing assemblies, and communications raceways shall not be installed in building locations other than the locations covered in 722.131(B) through 722.131(I) :

(1) Types BMU and BLU cables

(2) Communications wires

(3) Hybrid power and communications cables

(K) Multifamily Dwellings.

Installations of cables used for communications circuits, communications wires, cable routing assemblies, and communications raceways in multifamily dwellings shall be in accordance with 722.131(K)(1) and 722.131(K)(2) .

(1) Uses Permitted.

The following cables, cable routing assemblies, and communications raceways shall be permitted to be installed in multifamily dwellings in locations other than the locations covered in 722.131(B) through 722.131(G) :

(1) Plenum, riser, and general-purpose cables

(2) Limited-use cables less than 6 mm (0.25 in.) in diameter in nonconcealed spaces

(3) Plenum, riser, and general-purpose communications raceways

(4) Plenum, riser, and general-purpose cable routing assemblies

(5) Communications wires and plenum, riser, and general-purpose cables installed in the following:

(6) Plenum communications raceways

(7) Riser communications raceways

(8) General-purpose communications raceways

(9) Plenum, riser, and general-purpose cables installed in the following:

(10) Plenum cable routing assemblies

(11) Riser cable routing assemblies

(12) General-purpose cable routing assemblies

(13) Communications wires and plenum, riser, general-purpose, and limited-use cables installed in raceways recognized in Chapter 3

(14) Type CMUC under-carpet communications wires and cables installed under carpet, modular flooring, and planks

(2) Uses Not Permitted.

The following cables, cable routing assemblies, and communications raceways shall not be installed in multifamily dwellings in locations other than the locations covered in 722.131(B) through 722.131(G) :

(1) Types BMU and BLU cables

(2) Communications wires

(3) Hybrid power and communications cable.

(L) One- and Two-Family Dwellings.

Installations of cables used for communications circuits, communications wires, cable routing assemblies, and communications raceways in one- and two-family dwellings in locations other than those covered in 722.131(B) through 722.131(F) shall be in accordance with 722.131(L)(1) and 722.131(L)(2) .

(1) Uses Permitted.

The following wires, cables, cable routing assemblies, and communications raceways shall be permitted to be installed in one- and two-family dwellings in locations other than the locations covered in 722.131(B) through 722.131(F) :

(1) Plenum, riser, and general-purpose cables

(2) Limited-use cables less than 6 mm (0.25 in.) in diameter

(3) Plenum, riser, and general-purpose communications raceways

(4) Plenum, riser, and general-purpose cable routing assemblies

(5) Communications wires and plenum, riser, and general-purpose cables installed in the following:

(6) Plenum communications raceways

(7) Riser communications raceways

(8) General-purpose communications raceways

(9) Plenum, riser, and general-purpose cables installed in the following:

(10) Plenum cable routing assemblies

(11) Riser cable routing assemblies

(12) General-purpose cable routing assemblies

(13) Communications wires and plenum, riser, general-purpose, and limited-use cables installed in raceways recognized in Chapter 3

(14) Type CMUC under-carpet communications wires and cables installed under carpet, modular flooring, and planks

(15) Hybrid power and communications cable listed in accordance 722.100

(2) Uses Not Permitted.

The following cables, wires, cable routing assemblies, and communications raceways shall not be installed in one- and two-family dwellings in locations other than those covered in 722.131(B) through 722.131(F) :

(1) Types BMU and BLU cables

(2) Communications wires

722.132 Permitted Substitutions of Listed Cables Used for Communications Circuits and Communications Wires.

(A) Permitted Substitutions of Listed Communications Cables.

The substitutions for communications cables listed in Table 722.132(A) and illustrated in Figure 722.132(A) shall be permitted.

Table 722.132(A) Listed Communications Cable Substitutions

Cable Type	Permitted Substitutions
CMR	CMP
CMG, CM	CMP, CMR
CMX	CMP, CMR, CMG, CM

Figure 722.132(A) Listed Communications Cable Substitution Hierarchy.

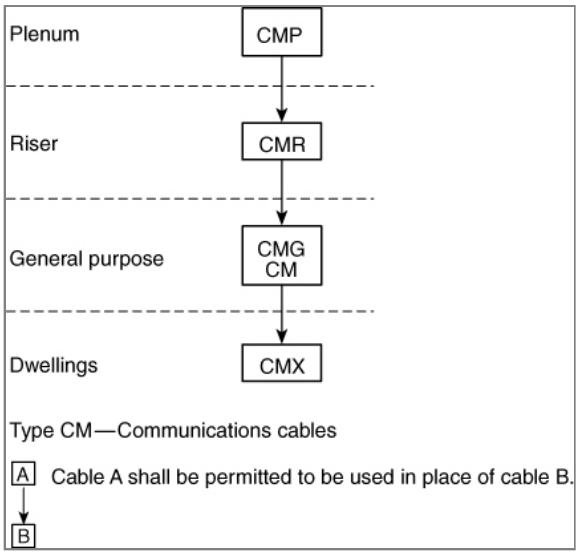

722.133 Installation of Communications Wires and Cables and CATV-Type Coaxial Cables.

Installation of communications wires and cables, from the protector to the equipment, or where no protector is required, communications wires and cables attached to the outside or inside of the building, shall comply with 722.133(A) and 722.133(B). Installation of CATV-type coaxial cables, beyond the point of grounding as defined in 750.48, shall comply with 722.133(A) through 722.133(C).

(A) In Raceways, Cable Trays, Boxes, Cables, Enclosures, and Cable Routing Assemblies.

(1) Other Circuits.

Communications cables and CATV-type coaxial cables shall be permitted in the same raceway, cable tray, box, enclosure, or cable routing assembly together and with jacketed cables of any of the following:

(1) Class 2 and Class 3 remote-control, signaling, and power-limited circuits in compliance with 645.6(E)(2) or Article 725, Parts I and II

(2) Power-limited fire alarm systems in compliance with Article 760, Parts I and III

(3) Nonconductive and conductive optical fiber cables in compliance with Article 722, Parts I and III

(4) Communications circuits in compliance with Article 722, Parts I and III

(5) Community antenna television and radio distribution systems in compliance with Article 722, Parts I and III

(6) Low-power network-powered broadband communications circuits in compliance with Article 722, Parts I and III

(2) Class 2 and Class 3 Circuits.

Class 1 circuits shall not be run in the same cable with communications circuits. Class 2 and Class 3 circuit conductors shall be permitted in the same listed communications cable with communications circuits.

(3) Electric Light, Power, Class 1, Non-Power-Limited Fire Alarm, and Medium-Power Network-Powered Broadband Communications Circuits in Raceways, Compartments, and Boxes.

Communications wires and cables and CATV-type coaxial cables shall not be placed in any raceway, compartment, outlet box, junction box, or similar fitting with conductors of electric light, power, Class 1, non-power-limited fire alarm, or medium-power network-powered broadband communications circuits.

Exception No. 1: Communications wires and cables and CATV-type coaxial cables shall be permitted to be placed in any raceway, compartment, outlet box, junction box, or other enclosures with conductors of electric light, power, Class 1, non-power-limited fire alarm, or medium-power network-powered broadband communications circuits where all of the conductors of electric light, power, Class 1, non-power-limited fire alarm, and medium-power network-powered broadband communications circuits are separated from all of the communications wires and cables and CATV-type coaxial cables by a permanent barrier or listed divider.

Exception No. 2: Communications wires and cables and CATV-type coaxial cables shall be permitted to be placed in outlet boxes, junction boxes, or similar fittings or compartments with power conductors where such conductors are introduced solely for power supply to the communications and coaxial cable system distribution equipment. The power circuit conductors shall be routed within the enclosure to maintain a minimum 6 mm (1/4 in.) separation from the communications wires and cables and the CATV-type coaxial cables.

Exception No. 3: Separation of circuits shall not be required in elevator traveling cables constructed in accordance with by 620.36.

(B) Other Applications.

Communications wires and cables and CATV-type coaxial cables shall be separated at least 50 mm (2 in.) from conductors of any electric light, power, Class 1, non-power-limited fire alarm, or medium-power network-powered broadband communications circuits.

Exception No. 1: Separation shall not be required where either of the following applies: (1) All of the conductors of electric light, power, Class 1, non-power-limited fire alarm, and medium-power network-powered broadband communications circuits are in a raceway or in metal-sheathed, metal-clad, nonmetallic-sheathed, Type AC, or Type UF cables. (2) All of the communications wires and cables and all of the CATV-type coaxial cables are encased in raceway.

Exception No. 2: Separation shall not be required where the communications wires and cables and CATV-type coaxial cables are permanently separated from the conductors of electric light, power, Class 1, non-power-limited fire alarm, and medium-power network-powered broadband communications circuits by a continuous and firmly fixed nonconductor, such as porcelain tubes or flexible tubing, in addition to the insulation on the wire.

(C) Support of Communications Wires and Cables and CATV-Type Coaxial Cables.

Raceways shall be used for their intended purpose. Communications wires and cables and CATV-type coaxial cables shall not be strapped, taped, or attached by any means to the exterior of any raceway as a means of support.

Exception: Overhead (aerial) spans of communications drop wires, communications cables, and CATV-type coaxial cables shall be permitted to be attached to the exterior of a raceway-type mast intended for the attachment and support of such wires and cables.

(D) Permitted Substitutions of Listed Coaxial Type CATV Cables.

The substitutions for coaxial cables in Table 722.133(D) and illustrated in Figure 722.133(D) shall be permitted.

Informational Note: The substitute cables in Table 722.133(D) and Figure 722.133(D) are only coaxial-type cables.

Table 722.133(D) Permitted Substitutions of Listed Coaxial Type CATV Cables

Cable Type	Permitted Substitutions
CATVP	CMP, BLP
CATVR	CATVP, CMP, CMR, BMR, BLP, BLR
CATV	CATVP, CMP, CATVR, CMR, CMG, CM, BMR, BM, BLP, BLR, BL
CATVX	CATVP, CMP, CATVR, CMR, CATV, CMG, CM, BMR, BM, BLP, BLR, BL, BLX

Figure 722.133(D) Listed Coaxial Type CATV Cables Permitted Substitution Hierarchy.

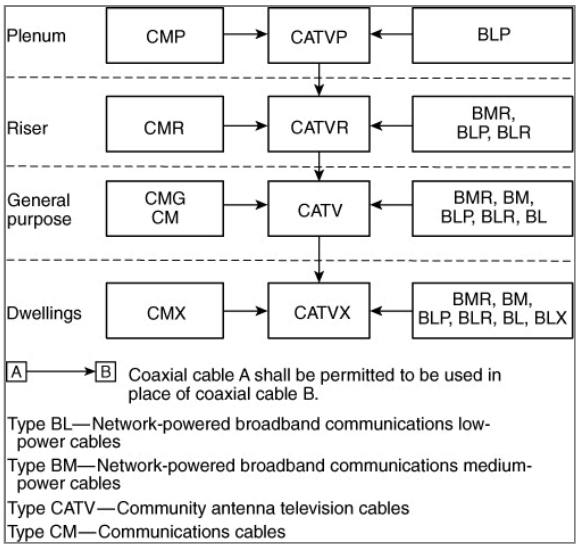

(E) Dwelling Unit Communications Outlet.

For new construction, a minimum of one communications outlet shall be installed with the dwelling in a readily accessible area and cabled to the service provider demarcation point.

722.134 Installation of Network-Powered Broadband Communications Cables and Equipment.

Cable and equipment installations within buildings shall comply with 722.134(A) through 722.134(C), as applicable.

(A) Separation of Conductors.

(1) In Raceways, Cable Trays, Boxes, Enclosures, and Cable Routing Assemblies.

(a) *Low- and Medium-Power Network-Powered Broadband Communications Circuit Cables.* Low- and medium-power network-powered broadband communications cables shall be permitted in the same raceway, cable tray, box, enclosure, or cable routing assembly.

(b) *Low-Power Network-Powered Broadband Communications Circuit Cables with Other Circuits.* Low-power network-powered broadband communications cables shall be permitted in the same raceway, cable tray, box, enclosure, or cable routing assembly with jacketed cables of any of the following circuits:

(3) Class 2 and Class 3 remote-control, signaling, and power-limited circuits in compliance with Article 725, Parts I and II

(4) Power-limited fire alarm systems in compliance with Article 760, Parts I and III

(5) Communications circuits in compliance with Article 722, Parts I and III

(6) Nonconductive and conductive optical fiber cables in compliance with Article 722, Parts I and III

(7) Community antenna television and radio distribution systems in compliance with Article 722, Parts I and III

(h) *Medium-Power Network-Powered Broadband Communications Circuit Cables with Optical Fiber Cables and Other Communications Cables.* Medium-power network-powered broadband communications cables shall not be permitted in the same raceway, cable tray, box, enclosure, or cable routing assembly with conductors of any of the following circuits:

(9) Communications circuits in compliance with Article 722, Parts I and III

(10) Conductive optical fiber cables in compliance with Article 722, Parts I and III

(11) Community antenna television and radio distribution systems in compliance with Article 722, Parts I and III

(l) *Medium-Power Network-Powered Broadband Communications Circuit Cables with Other Circuits.* Medium-power network-powered broadband communications cables shall not be permitted in the same raceway, cable tray, box, enclosure, or cable routing assembly with conductors of any of the following circuits:

(13) Class 2 and Class 3 remote-control, signaling, and power-limited circuits in compliance with Article 725, Parts I and II

(14) Power-limited fire alarm systems in compliance with Article 760, Parts I and III

(o) *Electric Light, Power, Class 1, Nonpowered Broadband Communications Circuit Cables.* Network-powered broadband communications cable shall not be placed in any raceway, cable tray, compartment, outlet box, junction box, or similar fittings with conductors of electric light, power, Class 1, or non-power-limited fire alarm circuit cables.

Exception No. 1: Network-powered broadband communications cable shall be permitted to be placed in a raceway, cable tray, compartment, outlet box, junction box, or similar fittings with conductors of electric light, power, Class 1, or non-power-limited fire alarm circuit cables where all of the conductors of electric light, power, Class 1, non-power-limited fire alarm circuits are separated from all of the network-powered broadband communications cables by a permanent barrier or listed divider.

Exception No. 2: Where power circuit conductors are installed in in outlet boxes, junction boxes, or similar fittings or compartments where such conductors are introduced solely for power supply to the network-powered broadband communications system distribution equipment, the power circuit conductors shall be routed within the enclosure to maintain a minimum 6 mm (1/4 in.) separation from network-powered broadband communications cables.

(2) Other Applications.

Network-powered broadband communications cable shall be separated at least 50 mm (2 in.) from conductors of any electric light, power, Class 1, and non-power-limited fire alarm circuits.

Exception No. 1: Separation shall not be required where either of the following applies:

(1) All of the conductors of electric light, power, Class 1, and non-power-limited fire alarm circuits are in a raceway or in metal-sheathed, metal-clad, nonmetallic-sheathed, Type AC, or Type UF cables.

(2) All of the network-powered broadband communications cables are encased in a raceway.

Exception No. 2: Separation shall not be required where the network-powered broadband communications cables are permanently separated from the conductors of electric light, power, Class 1, and non-power-limited fire alarm circuits by a continuous and firmly fixed nonconductor, such as porcelain tubes or flexible tubing, in addition to the insulation on the wire.

(B) Support of Network-Powered Broadband Communications Cables.

Raceways shall be used for their intended purpose. Network-powered broadband communications cables shall not be strapped, taped, or attached by any means to the exterior of any conduit or raceway as a means of support.

(C) Splicing of Medium-Powered Network-Powered Communications Cables.

Where a medium-powered network-powered broadband communications cable is spliced or extended, a listed junction box or listed patch panel shall be used.

(D) Bends.

Bends in network broadband cable shall be made so as not to damage the cable. The radius of the curve of the inner edge of any bend shall not be less than 10 times the diameter of the cable.

Informational Note: See ANSI/TIA-568.0-E, *Generic Telecommunications Cabling for Customer Premises* , for information on bend radii of network broadband cable during different types of installation conditions.

722.135 Underground Network-Powered Broadband Communications Cables Entering Buildings.

Underground network-powered broadband communications cables entering buildings shall comply with 722.135(A) and 722.135(B) .

(A) Protection from Physical Damage.

Direct-buried cable, conduit, or other raceways shall be installed to meet the minimum cover requirements of Table 722.135(A) . In addition, direct-buried cables emerging from the ground shall be protected by enclosures, raceways, or other approved means extending from the minimum cover distance required by Table 830.47(A) below grade to a point at least 2.5 m (8 ft) above finished grade. In no case shall the protection be required to exceed 450 mm (18 in.) below finished grade. Types BMU and BLU direct-buried cables emerging from the ground shall be installed in rigid metal conduit (RMC), intermediate metal conduit (IMC), rigid nonmetallic conduit, or other approved means extending from the minimum cover distance required by Table 830.47(A) below grade to the point of entrance.

Exception: Protection from physical damage shall not be required if a low-power network-powered broadband communications circuit is equipped with a listed fault protection device that is located on the network side of the network-powered broadband cable being protected and the device is appropriate to the network-powered broadband communications cable used.

Table 722.135(A) Network-Powered Broadband Communications Systems Minimum Cover Requirements.

Location of Wiring Method or Circuit	**Direct Burial Cables**	
	mm	**in.**
All locations not specified below	450	18
	150	6
In trench below 50 mm (2 in.) thick concrete or equivalent	300 300	12 12
	150	6
Under a building (in raceway only)	150 0	6 0
	0	0
Under minimum of 100 mm (4 in.) thick concrete exterior slab with no vehicular traffic and the slab extending not less than 150 mm (6 in.) beyond the underground installation	0 300	0 12
	100	4
One- and two-family dwelling driveways and outdoor parking areas and used only for dwelling-related purposes	100 300	4 12
	300	12
	300	12

Notes:

1. Cover shall be the shortest distance measured between a point on the top surface of any direct-buried cable, conduit, or other raceway and the top surface of finished grade, concrete, or similar cover.

2. Raceways approved for burial only where concrete encased shall require a concrete envelope not less than 50 mm (2 in.) thick.

3. Lesser depths shall be permitted where cables rise for terminations or splices or where access is otherwise required.

4. Where solid rock is encountered, all wiring shall be installed in metal or nonmetallic raceway permitted for direct burial. The raceways shall be covered by a minimum of 50 mm (2 in.) of concrete extending down to rock.

(B) Pools.

Cables located under the pool or within the area extending 1.5 m (5 ft) horizontally from the inside wall of the pool shall meet those clearances and requirements specified in 680.11 .

722.136 Permitted Substitutions of Network-Powered Broadband Communications System Cables.

The substitutions for network-powered broadband system cables listed in Table 722.136 shall be permitted.

Table 722.136 Permitted Substitutions of Network-Powered Broadband Communications System Cables.

Cable Type	Permitted Cable Substitutions
BM	BMR
BLP	CMP, CL3P
BLR	CMP, CL3P, CMR, CL3R, BLP, BMR
BL	CMP, CMR, CM, CMG, CL3P, CL3R, CL3, BMR, BM, BLP, BLR
BLX	CMP, CMR, CM, CMG, CMX, CL3P, CL3R, CL3, CL3X, BMR, BM, BLP, BRP, BL

722.140 Applications, Installations and Wiring Methods for Class 2 or Class 3 Circuits.

(A) General.

Class 2 and Class 3 circuits on the load side of the power source shall be permitted to be installed using wiring methods and materials in accordance with 722.140(A) , 722.140(B) , or a combination of both.

(1) Class 1 Wiring Methods and Materials.

Use of Class 1 wiring methods for Class 2 and Class 3 circuits shall be permitted. Separation from electric light, power, Class 1, non-power-limited fire alarm circuit conductors, and medium-power network-powered broadband communications cables shall comply with 725.136 .

Exception: The ampacity adjustment factors given in 310.15(C)(1) shall not apply.

(2) Class 2 and Class 3 Wiring Methods and Materials.

Conductors on the load side of the power source shall be insulated in accordance with 722.100 and 722.102 and be installed in accordance with 722.110 , 722.140(B) , and 725.136 .

Exception No. 1: As provided for in 620.21 for elevators and similar equipment.

Exception No. 2: Other wiring methods and materials installed in accordance with 725.3 shall be permitted to extend or replace the conductors and cables described in 722.100(A) and permitted by 722.140(A)(2) .

Exception No. 3: Bare Class 2 conductors shall be permitted as part of a listed intrusion protection system where installed in accordance with the listing instructions for the system.

(B) Cables Transmitting Power and Data.

(1) Classification of Circuits.

Circuits carrying data and power shall be classified as electrical power circuits in accordance with the type of electrical power carried.

Exception: PoE circuits shall be classified as communications and Class 2 or Class 3.

(2) Bundling of Cables Transmitting Power and Data.

Sections 722.140(B)(1) and 722.140(B)(2) shall apply to Class 2 and Class 3 circuits that transmit power and data to a powered device over listed cabling. Section 720.30 and Article 725, Parts I and III shall apply to Class 2 and Class 3 circuits that transmit power and data. The conductors that carry power for the data circuits shall be copper. The current in the power circuit shall not exceed the current limitation of the connectors.

Informational Note No. 1: One example of the use of cables that transmit power and data is the connection of closed-circuit TV cameras (CCTV).

Informational Note No. 2: The 8P8C connector is in widespread use with powered communications systems. IEC 60603-7-2008, Connectors for electronic equipment — Part 7-1: Detail specification for 8-way, unshielded, free and fixed connectors, specifies these connectors to have a current-carrying capacity per contact of 1.0 amperes maximum at 60°C (149°F). See IEC 60603-7 for more information on current-carrying capacity at higher and lower temperatures.

Informational Note No. 3: The requirements of Table 722.140(B)(4) were derived for carrying power and data over 4-pair copper balanced twisted pair cabling. ANSI/TIA 568-C.2-2009, Commercial Building Telecommunications Cabling Standard — Part 2: Balanced Twisted-Pair Telecommunications Cabling and Components, describes this type of cabling.

Informational Note No. 4: See TIA-TSB-184-A-2017, Guidelines for Supporting Power Delivery Over Balanced Twisted-Pair Cabling, for information on installation and management of balanced twisted pair cabling supporting power delivery.

Informational Note No. 5: See ANSI/NEMA C137.3-2017, American National Standard for Lighting Systems — Minimum Requirements for Installation of Energy Efficient Power over Ethernet (PoE) Lighting Systems, for information on installation of cables for PoE lighting systems.

Informational Note No. 6: Rated current for power sources covered in 722.130 is the output current per conductor the power source is designed to deliver to an operational load at normal operating conditions, as declared by the manufacturer. In the design of these systems, the actual current in a given conductor might vary from the rated current per conductor by as much as 20 percent. An increase in current in one conductor is offset by a corresponding decrease in current in one or more conductors of the same cable.

(3) Use of 4-Pair Class 2 or Class 3 Cables to Transmit Power and Data.

Where Type CL3P, Type CL2P, Type CL3R, Type CL2R, Type CL3, or Type CL2 4-pair cables transmit power and data, the rated current per conductor of the power source shall not exceed the ampacities in Table 722.140(B) at an ambient temperature of 30°C (86°F). For ambient temperatures above 30°C (86°F), the correction factors in Table 310.15(B)(1)(1) or in Equation 310.15(B) shall apply.

Exception: Compliance with Table 722.140(B) shall not be required for installations where conductors are 24 AWG or larger and the rated current per conductor of the power source does not exceed 0.3 amperes.

Informational Note: One example of the use of Class 2 cables is a network of closed-circuit TV cameras using 24 AWG, 60°C (140°F) rated, Type CL2R, Category 5e balanced twisted-pair cabling.

(4) Use of Class 2-LP or Class 3-LP Cables to Transmit Power and Data.

Type CL3P-LP, Type CL2P-LP, Type CL3R-LP, Type CL2R-LP, Type CL3-LP, or Type CL2-LP cables shall be permitted to supply power to equipment from a power source with a rated current per conductor up to the marked current limit located immediately following the suffix "-LP" and shall be permitted to transmit data to the equipment. Where the number of bundled LP cables is 192 or less and the selected ampacity of the cables in accordance with Table 722.140(B)(4) exceeds the marked current limit of the cable, the ampacity determined from the table shall be permitted to be used. For ambient temperatures above 30°C (86°F), the correction factors of Table 310.15(B)(1)(1) or Equation 310.15(B) shall apply. The Class 2-LP and Class 3-LP cables shall comply with the following, as applicable:

(1) Cables with the suffix "-LP" shall be permitted to be installed in bundles, raceways, cable trays, communications raceways, and cable routing assemblies.

(2) Cables with the suffix "-LP" and a marked current limit shall follow the substitution hierarchy of 722.122 for the cable type without the suffix "-LP" and without the marked current limit.

(3) System design shall be permitted by qualified persons under engineering supervision.

Informational Note: An example of the marking on a 23 AWG, 4-pair, Class 2 cable rated 75°C (167°F) with an LP current rating of 0.6 amperes per conductor is "CL2-LP(0.6A) 75°C 23 AWG 4-pair". See 722.100(A)(9) .

Table 722.140(B)(4) Ampacities of Each Conductor in Amperes in 4-Pair Class 2 or Class 3 Balanced Twisted-Pair Cables Based on Copper Conductors at an Ambient Temperature of 30°C (86°F) with All Conductors in All Cables Carrying Current, 60°C (140°F), 75°C (167°F), and 90°C (194°F) Rated Cables

AWG	Number of 4-Pair Cables in a Bundle																	
	1–7			8–19			20–37			38–61			62–91			92–192		
	Temperature Rating			Temperature Rating			Temperature Rating			Temperature Rating			Temperature Rating			Temperature Rating		
	60°C	75°C	90°C	60°C	75°C	90°C	60°C	75°C	90°C	60°C	75°C	90°C	60°C	75°C	90°C	60°C	75°C	90°C
26	1	1.23	1.42	0.71	0.87	1.02	0.55	0.68	0.78	0.46	0.57	0.67	0.45	0.55	0.64	NA	NA	NA
24	1.19	1.46	1.69	0.81	1.01	1.17	0.63	0.78	0.91	0.55	0.67	0.78	0.46	0.56	0.65	0.4	0.48	0.55
23	1.24	1.53	1.78	0.89	1.11	1.28	0.77	0.95	1.1	0.66	0.8	0.93	0.58	0.71	0.82	0.45	0.55	0.63
22	1.5	1.86	2.16	1.04	1.28	1.49	0.77	0.95	1.11	0.66	0.82	0.96	0.62	0.77	0.89	0.53	0.63	0.72

Notes:

1. For bundle sizes over 192 cables, or for conductor sizes smaller than 26 AWG, ampacities shall be permitted to be determined by qualified personnel under engineering supervision.

2. Where only half of the conductors in each cable are carrying current, the values in the table shall be permitted to be increased by a factor of 1.4.

Informational Note No. 1: Elevated cable temperatures can reduce a cable's data transmission performance. For information on practices for 4-pair balanced twisted pair cabling, see TIA-TSB-184-A, *Guidelines for Supporting Power Delivery Over Balanced Twisted-Pair Cabling* , and ANSI/TIA-568-C., *Balanced Twisted-Pair Telecommunications Cabling and Components Standard* , 6.4.7, 6.6.3, and Annex G, which provide guidance on adjustments for operating temperatures between 20°C and 60°C (68°F and 140°F).

Informational Note No. 2: The per-contact current rating of connectors can limit the maximum allowable current below the ampacity shown in Table 722.140.

722.150 Applications, Installations, and Wiring Methods for Class 4 Circuit Cables.

(A) Applications.

Class 4 cables shall not be permitted for any application that is not part of a Class 4 system.

Exception: Use of Class 4 cable for other applications shall be permitted if the cable has been listed as suitable for other applications.

(B) Installation in Dwelling Units.

Where Class 4 cables are used in a dwelling unit, 722.150(C) shall apply.

(C) Ampacity.

The ampacity of Class 4 cables shall comply with 720.6(B)(1) based on the temperature rating of the Class 4 cable for conductors sized 16 AWG to 6 AWG. For conductors sized 24 AWG to 17 AWG, the Class 4 cable shall have an ampacity in accordance with the marking FMP-XXA, where XX is the maximum ampacity permitted. In a dwelling unit(s), not more than 20 current- carrying conductors shall be installed without maintaining spacing.

Informational Note No. 1: See 722.100(A)(16) for additional Class 4 cable requirements.

Informational Note No. 2: See UL 1400-1-2022, *Outline of Investigation for Fault-Managed Power Systems — Part 1: General Requirements* , and UL 1400-2-2023, *Outline of Investigation for Fault-Managed Power Systems — Part 2: Requirements for Class 4 Cables* , for information on determining maximum ampacities.

722.160 Applications of Listed Optical Fiber Cables.

Permitted and nonpermitted applications of listed optical fiber cables shall be as indicated in Table 722.160 . The permitted applications shall be subject to the installation requirements of 722.161 and 722.162 . The substitutions for optical fiber cables in Table 722.165 and illustrated in Figure 722.165 shall be permitted.

Table 722.160 Applications of Listed Optical Fiber Cables in Buildings

Applications		Listed Optical Fiber Cable Type		
		OFNP, OFCP	OFNR, OFCR	OFNG, OFCG, OFN, OFC
In ducts specifically fabricated for environmental air as described in 720.22(B).	In fabricated ducts	Y	N	N
	In metal raceway that complies with 720.22(B)	Y	Y	Y
In other spaces used for environmental air (plenums) as described in 720.22(C)	In other spaces used for environmental air	Y	N	N
	In metal raceway that complies with 720.22(C)	Y	Y	Y

	In plenum communications raceways	Y	N	N
	In plenum cable routing assemblies	Y	N	N
	Supported by open metal cable trays	Y	N	N
	Supported by solid bottom metal cable trays with solid metal covers	Y	Y	Y
In risers	In vertical runs	Y	Y	N
	In metal raceways	Y	Y	Y
	In fireproof shafts	Y	Y	Y
	In plenum communications raceways	Y	Y	N
	In plenum cable routing assemblies	Y	Y	N
	In riser communications raceways	Y	Y	N
	In riser cable routing assemblies	Y	Y	N
	In one- and two-family dwellings	Y	Y	Y
Within buildings in other than air-handling spaces and risers	General	Y	Y	Y
	Supported by cable trays	Y	Y	Y
	In distributing frames and cross-connect arrays	Y	Y	Y
	In any raceway recognized in Chapter 3	Y	Y	Y
	In plenum communications raceway	Y	Y	Y
	In plenum cable routing assemblies	Y	Y	Y
	In riser communications raceways	Y	Y	Y
	In riser cable routing assemblies	Y	Y	Y
	In general-purpose communications raceways	Y	Y	Y
	In general-purpose cable routing assemblies	Y	Y	Y

Note: “N” indicates that the cable type shall not be permitted to be installed in the application. “Y” indicates that the cable type shall be permitted to be installed in the application subject to the limitations described in 722.161 and 722.162.

Informational Note No. 1: Article 722, Part III of covers installation methods within buildings. Table 722.160 covers the applications of listed optical fiber cables in buildings. The definition of *point of entrance* is in Article 100.

Informational Note No. 2: For information on the restrictions to the installation of optical fiber cables in ducts specifically fabricated for environmental air, see 722.161(B) .

722.161 Installation of Optical Fiber Cables.

Installation of optical fiber cables shall comply with 722.161(A) through 722.161(H) . Installation of raceways and cable routing assemblies shall comply with 722.110 .

(A) Ducts Specifically Fabricated for Environmental Air.

Installations of optical fiber cables in ducts specifically fabricated for environmental air shall be in accordance with 722.161(A)(1) and 722.161(A)(2) .

(1) Uses Permitted.

The following cables shall be permitted in ducts specifically fabricated for environmental air as described in 720.22(B) if they are directly associated with the air distribution system:

(1) Up to 1.22 m (4 ft) of Types OFNP and OFCP

(2) Types OFNP, OFCP, OFNR, OFCR, OFNG, OFCG, OFN, and OFC installed in raceways that are installed in compliance with 722.162

Informational Note: See NFPA 90A-2024, *Standard for the Installation of Air-Conditioning and Ventilating Systems* , for information on fire protection of wiring installed in fabricated ducts.

(2) Uses Not Permitted.

Types OFNR, OFCR, OFNG, OFCG, OFN, and OFC shall not be permitted to be installed in ducts specifically fabricated for environmental air as described in 720.22(B) .

Informational Note: See NFPA 90A-2024, *Standard for the Installation of Air-Conditioning and Ventilating Systems* , for information on fire protection of wiring installed in fabricated ducts.

(B) Other Spaces Used for Environmental Air (Plenums).

Installations of optical fiber cables in other spaces used for environmental air shall be in accordance with 722.161(B)(1) and 722.161(B)(2) .

(1) Uses Permitted.

The following cables shall be permitted in other spaces used for environmental air as described in 720.22(C) :

(1) Types OFNP and OFCP

(2) Types OFNP and OFCP installed in plenum communications raceways

(3) Types OFNP and OFCP installed in plenum cable routing assemblies

(4) Types OFNP and OFCP supported by open metal cable tray systems

(5) Types OFNP, OFCP, OFNR, OFCR, OFNG, OFCG, OFN, and OFC installed in raceways that are installed in compliance with 720.22(C)

(6) Types OFNP, OFCP, OFNR, OFCR, OFNG, OFCG, OFN, and OFC supported by solid bottom metal cable trays with solid metal covers in other spaces used for environmental air (plenums), as described in 720.22(C)

(7) Types OFNP, OFCP, OFNR, OFCR, OFNG, OFCG, OFN, and OFC installed in plenum riser and general-purpose communications raceways supported by solid bottom metal cable trays with solid metal covers in other spaces used for environmental air (plenums), as described in 720.22(C)

(2) Risers — Cables in Vertical Runs.

Types OFNR, OFCR, OFNG, OFCG, OFN, and OFC shall not be permitted to be installed in other spaces used for environmental air (plenums).

Informational Note: See NFPA 90A-2024, *Standard for the Installation of Air-Conditioning and Ventilating Systems* , for information on fire protection of wiring installed in other spaces used for environmental air.

(C) Risers — Cables in Vertical Runs.

Installations of optical fiber cables in other spaces used for environmental air shall be in accordance with 722.161(B)(1) and 722.161(B)(2) .

(1) Uses Permitted.

The following cables shall be permitted in vertical runs penetrating one or more floors and in vertical runs in a shaft:

(1) Types OFNP, OFCP, OFNR, and OFCR

(2) Types OFNP, OFCP, OFNR, and OFCR installed in the following:

(3) Plenum communications raceways

(4) Plenum cable routing assemblies

(5) Riser communications raceways

(6) Riser cable routing assemblies

(2) Uses Not Permitted.

Types OFNG, OFCG, OFN, and OFC shall not be permitted to be installed in vertical runs.

Informational Note: See 770.26 for firestop requirements for floor penetrations.

(D) Risers — Cables Permitted in Metal Raceways.

The following cables and innerducts shall be permitted in metal raceways in a riser having firestops at each floor:

(1) Types OFNP, OFCP, OFNR, OFCR, OFNG, OFCG, OFN, and OFC

(2) Types OFNP, OFCP, OFNR, OFCR, OFNG, OFCG, OFN, and OFC installed in the following:

(3) Plenum communications raceways (innerduct)

(4) Riser communications raceways (innerduct)

(5) General-purpose communications raceways (innerduct)

Informational Note: See 770.26 for firestop requirements for floor penetrations.

(E) Risers — Cables Permitted in Fireproof Shafts.

The following cables shall be permitted to be installed in fireproof riser shafts having firestops at each floor:

(1) Types OFNP, OFCP, OFNR, OFCR, OFNG, OFCG, OFN, and OFC

(2) Types OFNP, OFCP, OFNR, OFCR, OFNG, OFCG, OFN, and OFC installed in the following:

(3) Plenum communications raceways

(4) Plenum cable routing assemblies

(5) Riser communications raceways

(6) Riser cable routing assemblies

(7) General-purpose communications raceways

(8) General-purpose cable routing assemblies

Informational Note: See 770.26 for firestop requirements for floor penetrations.

(F) Risers — Cables Permitted in One- and Two-Family Dwellings.

The following cables shall be permitted in one- and two-family dwellings:

(1) Types OFNP, OFCP, OFNR, OFCR, OFNG, OFCG, OFN, and OFC

(2) Types OFNP, OFCP, OFNR, OFCR, OFNG, OFCG, OFN, and OFC installed in the following:

(3) Plenum communications raceways

(4) Plenum cable routing assemblies

(5) Riser communications raceways

(6) Riser cable routing assemblies

(7) General-purpose communications raceways

(8) General-purpose cable routing assemblies

(G) Cable Trays — Cables Permitted.

The following cables shall be permitted to be supported by cable trays:

(1) Types OFNP, OFCP, OFNR, OFCR, OFNG, OFCG, OFN, and OFC

(2) Types OFNP, OFCP, OFNR, OFCR, OFNG, OFCG, OFN, and OFC installed in the following:

(3) Plenum communications raceways

(4) Riser communications raceways

(5) General-purpose communications raceways

(H) Distributing Frames and Cross-Connect Arrays — Cables Permitted.

The following cables shall be permitted to be installed in distributing frames and cross-connect arrays:

(1) Types OFNP, OFCP, OFNR, OFCR, OFNG, OFCG, OFN, and OFC

(2) Types OFNP, OFCP, OFNR, OFCR, OFNG, OFCG, OFN, and OFC installed in the following:

(3) Plenum communications raceways

(4) Plenum cable routing assemblies

(5) Riser communications raceways

(6) Riser cable routing assemblies

(7) General-purpose communications raceways

(8) General-purpose cable routing assemblies

(I) Other Building Locations — Cables Permitted.

The following cables shall be permitted to be installed in building locations other than the locations covered in 722.161(A) through 722.161(G) :

(1) Types OFNP, OFCP, OFNR, OFCR, OFNG, OFCG, OFN, and OFC

(2) Types OFNP, OFCP, OFNR, OFCR, OFNG, OFCG, OFN, and OFC installed in the following:

(3) Plenum communications raceways

(4) Plenum cable routing assemblies

(5) Riser communications raceways

(6) Riser cable routing assemblies

(7) General-purpose communications raceways

(8) General-purpose cable routing assemblies

(9) Types OFNP, OFCP, OFNR, OFCR, OFNG, OFCG, OFN, and OFC installed in a raceway of a type recognized in Chapter 3

722.162 Installation of Optical Fiber Cables in Raceways, Cable Routing Assemblies, and Cable Trays.

(A) Types of Raceways.

Optical fiber cables shall be permitted to be installed in any raceway that complies with either 722.162(A)(1) or 722.162(A)(2) .

(1) Communications Raceways.

Optical fiber cables shall be permitted to be installed in listed communications raceways selected in accordance with Table 722.110(A) .

(2) Other Recognized Raceways.

Optical fiber cables shall be permitted to be installed in raceways recognized by and installed in accordance with Chapter 3.

(B) Raceway Fill for Optical Fiber Cables.

Raceway fill for optical fiber cables shall comply with either 722.162(B)(1) or 722.162(B)(2) .

(1) Without Electric Light or Power Conductors.

Where optical fiber cables are installed in a raceway without electric light or power conductors, the raceway fill requirements of Chapters 3 and 9 shall not apply.

(2) Nonconductive Optical Fiber Cables with Electric Light or Power Conductors.

Where nonconductive optical fiber cables are installed with electric light or power conductors in a raceway, the raceway fill requirements of Chapters 3 and 9 shall apply.

(C) Cable Routing Assemblies.

Optical fiber cables shall be permitted to be installed in listed cable routing assemblies selected in accordance with Table 722.110(B) .

(D) Cable Trays.

Optical fiber cables shall be permitted to be installed in metal or listed nonmetallic cable tray systems.

722.163 Installation of Optical Fiber Cable in Innerduct.

Listed plenum communications raceways, listed riser communications raceways, and listed general-purpose communications raceways selected in accordance with Table 722.110(A) shall be permitted to be installed as innerduct in any type of listed raceway permitted in Chapter 3.

722.164 Installation of Optical Fibers and Electrical Conductors.

(A) In Cable Trays and Raceways.

Conductive optical fiber cables contained in an armored or metal-clad-type sheath and nonconductive optical fiber cables shall be permitted to occupy the same cable tray or raceway with conductors for electric light, power, Class 1, non-power-limited fire alarm, Type ITC, or medium-power network-powered broadband communications circuits operating at 1000 volts or less. Conductive optical fiber cables without an armored or metal-clad-type sheath shall not be permitted to occupy the same cable tray or raceway with conductors for electric light, power, Class 1, non-power-limited fire alarm, Type ITC, or medium-power network-powered broadband communications circuits, unless all of the conductors of electric light, power, Class 1, non-power-limited fire alarm, and medium-power network-powered broadband communications circuits are separated from all of the optical fiber cables by a permanent barrier or listed divider.

(B) In Cabinets, Outlet Boxes, and Similar Enclosures.

Nonconductive optical fiber cables shall not be permitted to occupy the same cabinet, outlet box, panel, or similar enclosure housing the electrical terminations of an electric light, power, Class 1, non-power-limited fire alarm, or medium-power network-powered broadband communications circuit unless one or more of the following conditions exist:

(1) The nonconductive optical fiber cables are functionally associated with the electric light, power, Class 1, non-power-limited fire alarm, or medium-power network-powered broadband communications circuit.

(2) The conductors for electric light, power, Class 1, non-power-limited fire alarm, Type ITC, or medium-power network-powered broadband communications circuits operate at 1000 volts or less.

(3) The nonconductive optical fiber cables and the electrical terminations of electric light, power, Class 1, non-power-limited fire alarm, or medium-power network-powered broadband communications circuit are installed in factory- or field-assembled control centers.

(4) The nonconductive optical fiber cables are installed in an industrial establishment where conditions of maintenance and supervision ensure that only qualified persons service the installation.

When optical fibers are within the same hybrid cable for electric light, power, Class 1, non-power-limited fire alarm, or medium-power network-powered broadband communications circuits operating at 1000 volts or less, they shall be permitted to be installed only where the functions of the optical fibers and the electrical conductors are associated.

Optical fibers in hybrid optical fiber cables containing only current-carrying conductors for electric light, power, or Class 1 circuits rated 1000 volts or less shall be permitted to occupy the same cabinet, cable tray, outlet box, panel, raceway, or other termination enclosure with conductors for electric light, power, or Class 1 circuits operating at 1000 volts or less.

Optical fibers in hybrid optical fiber cables containing current-carrying conductors for electric light, power, or Class 1 circuits rated over 1000 volts shall be permitted to occupy the same cabinet, cable tray, outlet box, panel, raceway, or other termination enclosure with conductors for electric light, power, or Class 1 circuits in industrial establishments, where conditions of maintenance and supervision ensure that only qualified persons service the installation.

(C) With Other Circuits.

Conductive and nonconductive optical fiber cables shall be permitted in the same raceway, cable tray, box, enclosure, or cable routing assembly, with conductors of any of the following:

(1) Class 2 and Class 3 remote-control, signaling, and power-limited circuits in compliance with 645.6(E)(2) or Article 725, Parts I and II

(2) Power-limited fire alarm systems in compliance with Article 760, Parts I and III

(3) Communications circuits in compliance with Article 805, Parts I and V

(4) Community antenna television and radio distribution systems in compliance with Article 820, Parts I and V

(5) Low-power network-powered broadband communications circuits in compliance with Article 830, Parts I and V

(D) Support of Optical Fiber Cables.

Raceways shall be used for their intended purpose. Optical fiber cables shall not be strapped, taped, or attached by any means to the exterior of any conduit or raceway as a means of support.

Exception: Overhead (aerial) spans of optical fiber cables shall be permitted to be attached to the exterior of a raceway-type mast intended for the attachment and support of such cables.

722.165 Permitted Substitutions of Listed Optical Fiber Cables.

The substitutions for optical fiber cables in Table 722.165 and illustrated in Figure 722.165 shall be permitted.

Table 722.165 Permitted Substitutions of Listed Optical Fiber Cable

Cable Type	Permitted Substitutions
OFNP	None
OFCP	OFNP
OFNR	OFNP
OFCR	OFNP, OFCP, OFNR
OFNG, OFN	OFNP, OFNR
OFCG, OFC	OFNP, OFCP, OFNR, OFCR, OFNG, OFN

Figure 722.165 Cable Substitution Hierarchy.

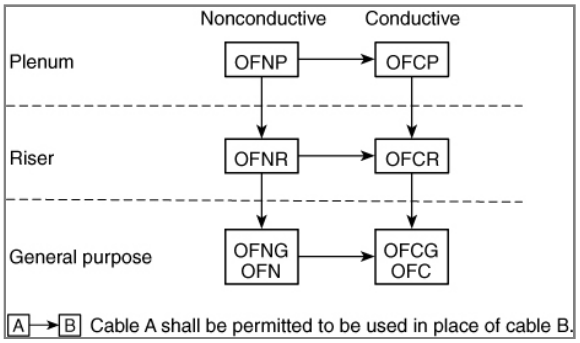

722.166 Overhead (Aerial) Optical Fiber Cables.

Overhead optical fiber cables containing a non-current-carrying metallic member entering buildings shall comply with 722.166(A) and 722.166(B) .

(A) On Poles and In-Span.

Where outside plant optical fiber cables and electric light or power conductors are supported by the same pole or are run parallel to each other in-span, the conditions described in 722.166(A)(1) through 722.166(A)(4) shall be met.

(1) Relative Location.

Where practicable, the outside plant optical fiber cables shall be located below the electric light or power conductors.

(2) Attachment to Cross-Arms.

Attachment of outside plant optical fiber cables to a cross-arm that carries electric light or power conductors shall not be permitted.

(3) Climbing Space.

The climbing space through outside plant optical fiber cables shall comply with the requirements of 225.14(B) .

(4) Clearance.

Supply service drops and sets of overhead service conductors of 0 volts to 750 volts running above and parallel to optical fiber cable service drops shall have a minimum separation of 300 mm (12 in.) at any point in the span, including the point of their attachment to the building. Clearance of not less than 1.0 m (40 in.) shall be maintained between the two services at the pole.

(B) Above Roofs.

Outside plant optical fiber cables shall have a vertical clearance of not less than 2.5 m (8 ft) from all points of roofs above which they pass.

Exception No. 1: The requirement of 770.44(B) shall not apply to auxiliary buildings such as garages and the like.

Exception No. 2: A reduction in clearance above only the overhanging portion of the roof to not less than 450 mm (18 in.) shall be permitted if the following applies:

(1) Not more than 1.2 m (4 ft) of optical fiber cable service drop cable passes above the roof overhang.

(2) The cable is terminated at a through- or above-the-roof raceway or approved support.

Exception No. 3: Where the roof has a slope of not less than 100 mm in 300 mm (4 in. in 12 in.), a reduction in clearance to not less than 900 mm (3 ft) shall be permitted.

Informational Note: See ANSI/IEEE C2-2017,. *National Electric Safety Code, Part 2, Safety Rules for Overhead Lines* , for additional information regarding overhead wires and cables.

722.167 Underground Optical Fiber Cables Entering Buildings.

Underground optical fiber cables entering buildings shall comply with 722.167(A) and 722.167(B) .

(A) Underground Systems with Electric Light, Power, Class 1, or Non-Power-Limited Fire Alarm Circuit Conductors.

Underground conductive optical fiber cables entering buildings with electric light, power, Class 1, or non-power-limited fire alarm circuit conductors in a raceway, handhole enclosure, or manhole shall be located in a section separated from such conductors by means of brick, concrete, or tile partitions or by means of a suitable barrier.

(B) Direct-Buried Cables and Raceways.

Direct-buried conductive optical fiber cables shall be separated by at least 300 mm (12 in.) from conductors of any electric light, power, non-power-limited fire alarm circuit conductors, or Class 1 circuit.

Exception No. 1: Separation shall not be required where the electric service conductors are installed in raceways or have metal cable armor.

Exception No. 2: Separation shall not be required where electric light or power branch-circuit or feeder conductors, non-power-limited fire alarm circuit conductors, or Class 1 circuit conductors are installed in a raceway or in metal-sheathed, metal-clad, or Type UF, or Type USE cables.

722.168 Unlisted Optical Fiber Cables Entering Buildings.

(A) Conductive and Nonconductive Cables.

Unlisted conductive and nonconductive outside plant optical fiber cables shall be permitted to be installed in building spaces, other than risers, ducts used for environmental air, plenums used for environmental air, and other spaces used for environmental air, where the length of the cable within the building, measured from its point of entrance, does not exceed 15 m (50 ft) and the cable enters the building from the outside and is terminated in an enclosure. The point of entrance shall be permitted to be extended from the penetration of the external wall, roof, or floor slab by continuously enclosing the entrance optical fiber cables in rigid metal conduit (RMC) or intermediate metal conduit (IMC) to the point of emergence.

Informational Note: Splice cases or terminal boxes, both metallic and plastic types, typically are used as enclosures for splicing or terminating optical fiber cables.

(B) Nonconductive Cables in Raceway.

Unlisted nonconductive outside plant optical fiber cables shall be permitted to enter the building from the outside and shall be permitted to be installed in any of the following raceways:

(1) Intermediate metal conduit (IMC)

(2) Rigid metal conduit (RMC)

(3) Rigid polyvinyl chloride conduit (PVC)

(4) Electrical metallic tubing (EMT)

Unlisted nonconductive outside plant cables installed in rigid polyvinyl chloride conduit (PVC) or electrical metallic tubing (EMT) shall not be installed in risers, ducts used for environmental air, plenums used for environmental air, and other spaces used for environmental air.

722.170 Applications of Listed PLFA Cables.

PLFA cables shall comply with the requirements described in Table 722.170 or where cable substitutions are made as shown in 722.172 . Where substitute cables are installed, the wiring requirements of Article 760, Parts I and III shall apply. Types FPLP-CI, FPLR-CI, and FPL-CI cables shall be permitted to be installed to provide 2-hour circuit integrity rated cables.

Table 722.170 Applications of Listed PLFA Cables in Buildings

Applications		Cable Type		
		FPLP and FPLP-CI	FPLR and FPLR-CI	FPL and FPL-CI
In fabricated ducts as described in 720.22(B)	In fabricated ducts	Y	N	N
	In metal raceway that complies with 720.22(B)	Y	Y	Y
In other spaces used for environmental air as described in 720.22I	In other spaces used for environmental air	Y	N	N
	In metal raceway that complies with 720.22I	Y	Y	Y
	In plenum communications raceways	Y	N	N
	In plenum cable routing assemblies	Y	N	N
	Supported by open metal cable trays	Y	N	N
In risers	Supported by solid bottom metal cable trays with solid metal covers	Y	Y	Y
	In vertical runs	Y	Y	N
	In metal raceways	Y	Y	Y
	In fireproof shafts	Y	Y	Y
	In plenum communications raceways	Y	Y	N
	In plenum cable routing assemblies	Y	Y	N
	In riser communications raceways	Y	Y	N
	In riser cable routing assemblies	Y	Y	N
	In one- and two-family dwellings	Y	Y	Y
Within buildings in other than air-handling spaces and risers	General	Y	Y	Y

Supported by cable trays	Y	Y	Y
In any raceway recognized in Chapter 3	Y	Y	Y
In plenum communications raceway	Y	Y	Y
In plenum cable routing assemblies	Y	Y	Y
In riser communications raceways	Y	Y	Y
In riser cable routing assemblies	Y	Y	Y
In general-purpose communications raceways	Y	Y	Y
In general-purpose cable routing assemblies	Y	Y	Y

Note:

"N" indicates that the cable type shall not be permitted to be installed in the application. "Y" indicates that the cable type shall be permitted to be installed in the application subject to the limitations described in 760.133 through 760.145.

722.171 Wiring Methods and Materials on Load Side of the PLFA Power Source.

Fire alarm circuits on the load side of the power source shall be permitted to be installed using wiring methods and materials in accordance with 722.171(A) , 722.171(B) , or a combination of both. Article 722, Parts I and II shall apply.

(A) PLFA Wiring Methods and Materials.

Power-limited fire alarm conductors and cables described in 722.170 shall be installed as detailed in 722.171(B)(1) through 722.171(B)(4), and 722.172 .

(1) In Raceways, Exposed on Ceilings or Sidewalls, or Fished in Concealed Spaces.

Cable splices or terminations shall be made in listed fittings, boxes, enclosures, fire alarm devices, or utilization equipment. Where installed exposed, cables shall be adequately supported and installed such that maximum protection against physical damage is afforded by building construction such as baseboards, door frames, ledges, and so forth. Where located within 2.1 m (7 ft) of the floor, cables shall be securely fastened in an approved manner at intervals of not more than 450 mm (18 in.).

(2) Passing Through a Floor or Wall.

Cables shall be installed in metal raceways or rigid nonmetallic conduit where passing through a floor or wall to a height of 2.1 m (7 ft) above the floor, unless adequate protection can be afforded by building construction such as detailed in 722.171(A)(1) or unless an equivalent solid guard is provided.

(3) Nonconcealed Spaces.

Cables covered by Chapter 3 used for wiring of PLFA circuits and installed in nonconcealed spaces shall comply with the following:

(1) The cables shall be installed in accordance with 722.100(A)(15)(a) and 722.100(A)(15)(b) .

(2) Exposed portions of the cable shall have a length not exceeding 3 m (10 ft).

(4) Portable Fire Alarm Systems.

A portable fire alarm system provided to protect a stage or set when not in use shall be permitted to use wiring methods in accordance with 530.12 .

(5) PLFA Wired Using NPLFA Wiring Methods and Materials.

NPLFA wiring methods shall be permitted when used in accordance with 760.46 , 760.49 , or 760.53 for PLFA circuits. Conductors shall be solid or stranded copper. Separation from electric light, power, Class 1, non-power-limited fire alarm circuit conductors, and medium-power network-powered broadband communications cables shall comply with 760.136 .

(B) Power-Limited Fire Alarm Conductor Size.

Conductors of 26 AWG shall be permitted only where spliced with a connector listed as suitable for 26 AWG to 24 AWG or larger conductors that are terminated on equipment or where the 26 AWG conductors are terminated on equipment listed as suitable for 26 AWG conductors. Single conductors shall not be smaller than 18 AWG.

(C) Support of Conductors.

Power-limited fire alarm circuit conductors shall not be strapped, taped, or attached by any means to the exterior of any conduit or other raceway as a means of support.

722.172 Permitted Substitutions for Power-Limited Fire Alarm Cables.

The substitutions for fire alarm cables listed in Table 722.172 and illustrated in Figure 722.172 shall be permitted. Where substitute cables are installed, the wiring requirements of Article 760, Parts I and III shall apply.

Informational Note: See 722.100 for information on communications cables (CMP, CMR, CMG, CM).

Table 722.172 Permitted Substitutions for Power-Limited Fire Alarm Cables.

Cable Type	Permitted Substitutions
FPLP	CMP
FPLR	CMP, FPLP, CMR
FPL	CMP, FPLP, CMR, FPLR, CMG, CM

Figure 722.172 Power-Limited Fire Alarm Cable Substitution Hierarchy.

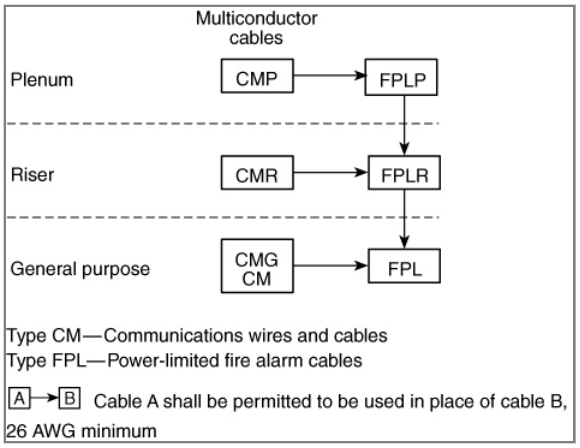

722.180 Circuit Integrity (CI) Cable, Fire-Resistive Cable System, or Electrical Circuit Protective System.

(A) General.

CI cable, a fire-resistive cable system, or a listed electrical circuit protective system shall be permitted for use in systems that supply critical circuits to ensure survivability for continued circuit operation for a specified time under fire conditions.

(B) Securing and Supporting.

Circuit integrity type CI cable shall be supported at 610 mm (24 in.) maximum intervals in accordance with the following:

(1) Secured to the noncombustible surface of the building structure

(2) Using steel supports and fasteners

722.181 Thermocouple Circuits.

Conductors in Type PLTC cables used for Class 2 thermocouple circuits shall be permitted to be any of the materials used for thermocouple extension wire.

722.182 Installation of Circuit Conductors Extending Beyond One Building.

Circuit conductors that extend beyond one building and are run such that they are subject to accidental contact with electric light or power conductors operating over 300 volts to ground, or are exposed to lightning on interbuilding circuits on the same premises, shall comply with the following:

(1) For other than coaxial conductors, 750.48 , 750.100 , 800.44 , 800.50 , 800.53 , 805.170(A) , and 805.170(B)

(2) For coaxial conductors, 750.48(B) , 750.75 , and 800.44

Statement of Problem and Substantiation for Public Comment

The purpose of this PC is to improve the usability of this Article by simplifying the title and the scope. The simplification of the scope is facilitated by the adoption of a definition of limited-energy cables in a companion PC.

All the recommended changes are in 722.1. All the apparent changes of text beyond 722.1 were done by TerraView and should be ignored.

Related Public Comments for This Document

Related Comment	Relationship
Public Comment No. 838-NFPA 70-2024 [New Definition after Definition: Cable, Integrated Gas Spac...]	Defines limited-energy cable.
Public Comment No. 838-NFPA 70-2024 [New Definition after Definition: Cable, Integrated Gas Spac...]	
Public Comment No. 1567-NFPA 70-2024 [Article 722]	

Related Item

• Global FCR-238

Submitter Information Verification

Submitter Full Name: David Kiddoo
Organization: CCCA
Affiliation: Communications Cable & Connectivity Association
Street Address:

City:	
State:	
Zip:	
Submittal Date:	Thu Jul 25 00:23:47 EDT 2024
Committee:	NEC-P03

Public Comment No. 25-NFPA 70-2024 [Article 722]

Article 722 Limited-Energy Cables ~~for Power-Limited Circuits, Fault-Managed-Power Circuits, Optical Fiber Circuits, and Communications Circuits~~

Part I. General

722.1 Scope.

This article covers the general requirements for the installation of ~~single- and multiple-conductor cables used in~~ Class 2 and Class 3 power-limited ~~circuits~~ cables , power-limited tray cables, power-limited fire alarm (PLFA) ~~circuits~~ cables , Class 4 fault-managed power ~~circuits~~ cables , optical fiber cables, ~~and~~ communications ~~systems power-limited, remote-control, and signaling circuits~~ cables, network-powered broadband communications low-power cables and CATV-type coaxial cables that are not an integral part of a device or utilization equipment installed inside of buildings.

~~These general requirements also cover cables used in communications systems and apply to communications circuits, data communications, community antenna television and radio distribution systems, network-powered broadband communications systems, and premises-powered broadband communications systems, unless modified by applicable parts of Articles 800 , 810, 820 , 830 , or 840 .~~

~~Informational Note No. 1: See 206.4 for classifications of remote-control and signaling circuits.~~

~~Informational Note No. 2: Class 4 fault-managed power systems consist of a Class 4 power transmitter and a Class 4 power receiver connected by a Class 4 cabling system. These systems are characterized by monitoring the circuit for faults and controlling the source current to ensure the energy delivered into any fault is limited. Class 4 systems differ from Class 1, Class 2, and Class 3 systems in that they are not limited for power delivered to an appropriate load. They are current limited for faults between the Class 4 transmitter and Class 4 receiver.~~

~~Informational Note No. 3: The circuits described herein are characterized by usage and electrical power limitations that differentiate them from electric light and power circuits; therefore, alternative requirements are given regarding minimum wire sizes, ampacity adjustment and correction factors, overcurrent protection, installation requirements, and wiring methods and materials.~~

THE RECOMMENDED CHANGES OF THIS PC END HERE.

722.4 Other Articles.

In addition to the requirements of this article, installations of limited-energy and communications wires and cables shall also comply with the following:

(1) Class 2 and Class 3 cables: Article 725 , Part II and Article 722 , Parts I and II

(2) Class 4 cables: Article 726 , Part II and IV and Article 722 , Parts I and II

(3) Fire alarm cables: Article 760 , Part III

(4) Optical fiber cables: Article 770 , Part V

(5) Coaxial cables — installations of premises (within buildings) CATV and radio distribution circuits: Article 820 , Part V

722.12 Uses Not Permitted.

Class 4 cables shall not be permitted for any applications that are not part of a Class 4 system.

Exception: Use of Class 4 cable for other applications shall be permitted if the cable has been listed as suitable for the other applications.

722.14 Cables Containing Communications and Power Circuits.

Cables carrying data or communications circuits as well as power circuits shall be classified as electrical power circuits in accordance with the type of electrical power carried.

Exception: PoE circuits shall be permitted to be classified as communications and Class 2 or Class 3.

Informational Note: Communications circuits carrying power in accordance with Article 805 , Part II, 820.15 , 830.15 , or 840.160 are considered according to their appropriate article for each type of circuit.

722.27 Temperature Limitation of Limited-Energy and Communications Cables.

No cable shall be used in such a manner that its operating temperature exceeds that of its rating.

722.30 Securing and Supporting.

(A) General.

In addition to the requirements of 720.19 and 720.30 , limited-energy and communications cables shall be installed in accordance with 722.30(A)(1) and 722.30(A)(2) .

(1) Supporting.

Cables installed exposed on the surface of ceilings and sidewalls shall be supported by the building structure in such a manner that the cable will not be damaged by normal building use.

(2) Securing.

Such cables shall be secured by hardware, including straps, staples, cables ties listed and identified for securement and support, and hangers, or similar fittings designed and installed so as not to damage the cable.

(B) Spaces Used for Environmental Air (Plenums).

Limited-energy and communications cables installed in other spaces used for environmental air (plenums) shall be secured and supported in accordance with 720.30(G) .

Part II. Listing and Marking Requirements

722.100 Listing of Limited-Energy and Communications Cables.

Cables installed in buildings shall be listed in accordance with 722.100(A)(1) through 722.100(A)(16) .

Exception No. 1: Optical fiber cables that are installed in compliance with 722.168 shall not be required to be listed.

Exception No. 2: Cables installed in compliance with 800.48 shall not be required to be listed.

(A) Listing of Cables.

Cables installed as wiring methods within buildings shall be listed as resistant to the spread of fire and other criteria in accordance with 722.100(A)(1) through 722.100(A)(16) .

Informational Note No. 1: See UL 13, *Standard for Power-Limited Circuit Cables* , for applicable requirements for listing of Class 2 and Class 3 cable and power-limited tray cable (PLTC).

Informational Note No. 2: See UL 1424, *Cables for Power-Limited Fire-Alarm Circuits* , for applicable requirements for listing of power-limited fire alarm cable.

Informational Note No. 3: See UL 1651, *Optical Fiber Cable* , for applicable requirements for listing of optical fiber cable.

Informational Note No. 4: See UL 1400-2, *Outline for Fault-Managed Power Systems — Part 2: Requirements for Class 4 Cables* , for applicable requirements for listing of Class 4 cable.

(1) Plenum Cable.

Plenum cable shall be listed as suitable for use in ducts, plenums, and other space for environmental air and shall be listed as having adequate fire-resistant and low-smoke producing characteristics. Plenum cable types shall be identified in Table 722.102(A) .

Informational Note: See NFPA 262-2023, *Standard Method of Test for Flame Travel and Smoke of Wires and Cables for Use in Air-Handling Spaces* , for the test method used to determine that a cable is low-smoke producing and fire resistant, exhibiting a maximum peak optical density of 0.50 or less, an average optical density of 0.15 or less, and a maximum flame spread distance of 1.52 m (5 ft) or less.

(2) Riser Cable.

Riser cable shall be listed as suitable for use in a vertical run in a shaft or from floor to floor and shall be listed as having fire-resistant characteristics capable of preventing the carrying of fire from floor to floor.

Informational Note: See ANSI/UL 1666-2012, *Test for Flame Propagation Height of Electrical and Optical-Fiber Cable Installed Vertically in Shafts* , for the cable requirements defining fire-resistant characteristics capable of preventing the carrying of fire from floor to floor.

(3) General-Purpose Cable.

General-purpose cable shall be listed as resistant to the spread of fire and as suitable for general-purpose use, except for use in risers, ducts, plenums, and other space used for environmental air.

Informational Note: See UL 2556, *Wire and Cable Test Methods* , for defining *resistant to the spread of fire* . One method is to demonstrate that the cables do not spread fire to the top of the tray in the UL Flame Exposure, Vertical Tray Flame Test. The smoke measurements in the test method are not applicable. A method of defining *resistant to the spread of fire* is for the damage (char length) not to exceed 1.5 m (4 ft 11 in.) when performing the FT4 Vertical Flame Test.

(4) Alternative General-Purpose Cable.

Alternative general-purpose optical fiber cable shall be listed as suitable for general-purpose use, with the exception of risers and plenums, and shall also be resistant to the spread of fire.

Informational Note: See CSA C22.2 No. 0.3-M-2001, *Test Methods for Electrical Wires and Cables* , for the CSA Vertical Flame Test — cables in cable trays, that can also be used to define *resistant to the spread of fire* when the damage (char length) does not exceed 1.5 m (4 ft 11 in.).

(5) Limited-Use Cable.

Limited-use cable shall be listed as suitable for use in dwellings and raceways and shall be listed as resistant to flame spread.

Informational Note: See ANSI/UL 2556, *Standard for Wire and Cable Test Methods* , for one method of determining that cable is resistant to flame spread by testing the cable to the FV-2/VW-1 test.

(6) Type PLTC.

Type PLTC nonmetallic-sheathed, power-limited tray cable shall be listed as being suitable for cable trays, resistant to the spread of fire, and sunlight- and moisture-resistant. Type PLTC cable used in a wet location shall be listed for use in wet locations and marked “wet” or “wet location.”

Informational Note: See ANSI/UL 1685-2010, *Standard for Safety for Vertical-Tray Fire-Propagation and Smoke-Release Test for Electrical and Optical-Fiber Cables* , for the UL Flame Exposure, Vertical Tray Flame Test that is used to determine resistance to the spread of fire when cables do not spread fire to the top of the tray. The smoke measurements in the test method are not applicable. See CSA C22.2 No. 0.3-M-2001, *Test Methods for Electrical Wires and Cables* , for the CSA Vertical Flame Test — cables in cable trays that can also be used to define *resistant to the spread of fire* when the damage (char length) does not exceed 1.5 m (4 ft 11 in.).

(7) Circuit Integrity (CI) Cable, Fire-Resistive Cable System, or Electrical Circuit Protective System.

Cables that are used for survivability of critical circuits under fire conditions shall comply with 722.100(A)(7)(a) , 722.100(A)(7)(b) , or 722.100(A)(7)(c) .

Informational Note: See *NFPA 72* -2025, *National Fire Alarm and Signaling Code* , 12.4.3 and 12.4.4 for additional information on fire alarm CI cable, fire-resistive cable systems, or electrical circuit protective systems used for fire alarm circuits to comply with the survivability requirements to maintain the circuit’s electrical function during fire conditions for a defined period of time.

(a) *CI Cables.* CI cables of the types specified in 722.100(A)(1) , 722.100(A)(2) , 722.100(A)(3) , 722.100(A)(4) , and 722.100(A)(6) and used for survivability of critical circuits shall be marked with the additional classification using the suffix “CI.” To maintain its listed fire-resistive rating, CI cable shall only be installed in free air in accordance with 722.180(B) . CI cables shall only be permitted to be installed in a raceway where specifically listed and marked as part of a fire-resistive cable system as covered in 722.100(A)(7)(b) .

Informational Note: See UL 2196, *Fire Test for Circuit Integrity of Fire-Resistive Power, Instrumentation, Control and Data Cables* , and UL 1425, *Cables for Non–Power-Limited Fire-Alarm Circuits* , for information on establishing a rating for CI cable. The *UL Guide Information for Nonpower-limited Fire Alarm Circuits (HNHT)* contains information to identify the cable and its installation limitations to maintain the fire-resistive rating.

(b) *Fire-Resistive Cables.* Fire-resistive cables of the types specified in 722.100(A)(1) , 722.100(A)(2) , 722.100(A)(3) , 722.100(A)(4) , 722.100(A)(6) , and 722.100(A)(7)(a) that are part of a fire-resistive cable system shall be identified with the system identifier and hourly rating marked on the protectant or the smallest unit container and installed in accordance with the listing of the system.

Informational Note: See UL 2196, *Fire Test for Circuit Integrity of Fire-Resistive Power, Instrumentation, Control and Data Cables* , for information on establishing a rating for a fire-resistive cable system. The *UL Guide Information for Electrical Circuit Integrity Systems (FHIT)* contains information to identify the system and its installation limitations to maintain a minimum fire-resistive rating.

(c) *Electrical Circuit Protective System.* Protectants for cables of the types specified in 722.100(A)(1) , 722.100(A)(2) , 722.100(A)(3) , 722.100(A)(4) , and 722.100(A)(6) that are part of an electrical circuit protective system shall be identified with the protective system identifier and hourly rating marked on the protectant or the smallest unit container and installed in accordance with the listing of the protective system.

Informational Note: See UL 1724, *Fire Tests for Electrical Circuit Protective Systems* , for information on establishing a rating for an electrical circuit protective system. The *UL Guide Information for Electrical Circuit Integrity Systems (FHIT)* contains information to identify the system and its installation limitations to maintain the fire-resistive rating.

(8) Class 3 Single Conductors.

Class 3 single conductors used as other wiring within buildings shall be listed Type CL3 and shall not be smaller than 18 AWG.

Informational Note: See ANSI/UL 1685-2010, *Standard for Safety for Vertical-Tray Fire-Propagation and Smoke-Release Test for Electrical and Optical-Fiber Cables*, for the UL Flame Exposure, Vertical Tray Flame Test that is used to determine resistance to the spread of fire when cables do not spread fire to the top of the tray. The smoke measurements in the test method are not applicable. See CSA C22.2 No. 0.3-M-2001, *Test Methods for Electrical Wires and Cables*, for the CSA Vertical Flame Test — cables in cable trays that can also be used to define *resistant to the spread of fire* when the damage (char length) does not exceed 1.5 m (4 ft 11 in.).

(9) Limited Power (LP) Cable.

Class 2 and Class 3 LP cables shall be listed as suitable for carrying power and data up to a specified current limit for each conductor without exceeding the temperature rating of the cable. The cables shall be marked with the suffix "-LP (XXA)" where XXA designates the current limit in amperes per conductor.

Informational Note: An example of the marking on 23 AWG, 4-pair, Class 2 cable rated 75°C (167°F) with an LP current rating of 0.6 amperes per conductor is "CL2-LP (0.6A) 75°C 23 AWG 4-pair."

(10) Under-Carpet Cables.

Under-carpet cable shall be listed as suitable for use under carpet, floor covering, modular tiles, and planks.

Informational Note: See UL 444, *Standard for Safety for Communications Cables*, for the compressive loading test used to determine the suitability of cable for under-carpet use.

(11) Wet Locations.

Cable used in a wet location shall be listed for use in wet locations and be marked "wet" or "wet location" or have a moisture-impervious metal sheath.

(12) Field-Assembled Optical Fiber Cables.

Field-assembled optical fiber cable shall comply with 722.100(A)(12)(a) through 722.100(A)(12)(d).

(1) The specific combination of jacket and optical fibers intended to be installed as a field-assembled optical fiber cable shall be one of the types in 722.100(A)(1), 722.100(A)(2), or 722.100(A)(3) and shall be marked in accordance with Table 722.102(A).

(2) The jacket of a field-assembled optical fiber cable shall have a surface marking indicating the specific optical fibers with which it is identified for use.

(3) The optical fibers shall have a permanent marking, such as a marker tape, indicating the jacket with which they are identified for use.

(4) The jacket without fibers shall meet the listing requirements for communications raceways in 722.110 and 722.111 in accordance with the cable marking.

(13) Cables Containing Optical Fibers.

Composite optical fiber cables shall be listed as electrical cables based on the type of electrical conductors.

(14) Class 2 and Class 3 Cable Voltage and Temperature Ratings.

Class 2 cables shall have a voltage rating of not less than 150 volts. Class 3 cables shall have a voltage rating of not less than 300 volts. Class 2 and Class 3 cables shall have a temperature rating of not less than 60°C (140°F).

(15) Power-Limited Fire Alarm (PLFA) Cables.

PFLA cables shall comply with 722.100(A)(15)(a) through 722.100(A)(15)(d).

(1) Conductors for cables, other than coaxial cables, shall be solid or stranded copper. Coaxial cables shall be permitted to use 30 percent conductivity copper-covered steel center conductor wire.

(2) The size of conductors in a multiconductor cable shall not be smaller than 26 AWG. Single conductors shall not be smaller than 18 AWG. Conductors of 26 AWG shall be permitted only where spliced with a connector listed as suitable for 26 AWG to 24 AWG or larger conductors that are terminated on equipment or where the 26 AWG conductors are terminated on equipment listed as suitable for 26 AWG conductors.

(3) Cables shall have a voltage rating of not less than 300 volts.

(4) Cables shall have a temperature rating of not less than 60°C (140°F).

(16) Class 4 Cable Construction.

(a) *Sizes.* Conductors of sizes not smaller than 24 AWG shall be permitted to be used.

(b) *Insulation.* Insulation on conductors shall be rated not less than 450 volts dc.

(c) *Voltage Rating.* Cables shall have a voltage rating of not less than 450 volts dc. Voltage ratings shall not be marked on the cables.

(d) *Temperature Rating.* Cables shall have a temperature rating of not less than 60°C (140°F).

722.102 Marking of Listed Limited-Energy and Communications Cables.

(A) General.

Cables installed in buildings shall be marked in accordance with 722.102(A), and they shall be permitted to be marked in accordance with 722.102(B) .

Cables shall be durably marked on the surface in accordance with the following:

(1) The AWG size or circular mil area shall be repeated at intervals not exceeding 610 mm (24 in.).

(2) All other markings shall be repeated at intervals not exceeding 1.0 m (40 in.).

(3) The proper type designation for the type of cable shall be marked in accordance with Table 722.102(A) .

(4) The manufacturer's name, trademark, or other distinctive marking by which the organization responsible for the product can be readily identified shall be marked.

(5) The AWG size or circular mil area shall be marked.

Informational Note No. 1: See Chapter 9, Table 8 for conductor area expressed in SI units for conductor sizes specified in AWG or circular mil area.

(6) The temperature rating for a temperature rating exceeding 60°C (140°F) shall be marked.

Informational Note No. 2: A minimum temperature rating of 60°C (140°F) is assumed for cables not marked with a temperature rating.

(7) Voltage ratings shall not be marked on the cables.

Exception: Voltage markings shall be permitted where the cable has multiple listings, and a voltage marking is required for one or more of the listings.

Informational Note No. 3: Voltage markings on cables could be misinterpreted to suggest that the cables may be suitable for Class 1 electric light and power applications.

Informational Note No. 4: Cable types are listed in descending order of fire resistance rating.

Table 722.102(A) Cable Type Markings

Cable Type	Cable Marking
Class 4 plenum cable	CL4P
Class 3 plenum cable	CL3P
Class 2 plenum cable	CL2P
Power-limited fire alarm plenum cable	FPLP
Nonconductive optical fiber plenum cable	OFNP
Conductive optical fiber plenum cable	OFCP
Class 4 riser cable	CL4R
Class 3 riser cable	CL3R
Class 2 riser cable	CL2R
Power-limited fire alarm riser cable	FPLR
Nonconductive optical fiber riser cable	OFNR
Conductive optical fiber riser cable	OFCR
Class 4 general-purpose cable	CL4
Class 3 general-purpose cable	CL3
Class 2 general-purpose cable	CL2
Class 4 outdoor-only use cable	CL4Z
Power-limited fire alarm cable	FPL
Nonconductive general-purpose optical fiber cable	OFN
Conductive general-purpose optical fiber cable	OFC
Alternative nonconductive general-purpose optical fiber cable	OFNG
Alternative conductive general-purpose optical fiber cable	OFCG
Class 3 cable — limited use	CL3X
Class 2 cable — limited use	CL2X
Under-carpet cable	CMUC

Note: All types of CL2, CL3, CL4, and FPL cables containing optical fibers are provided with the suffix "-OF."

(B) Optional Markings.

Cables shall be permitted to be surface marked to indicate special characteristics of the cable materials.

Informational Note No. 1: Examples of these characteristics include, but are not limited to, limited smoke, halogen free, low smoke and halogen free, and sunlight resistant.

Informational Note No. 2: Some examples of optional markings are ST1 to indicate limited smoke characteristics. See UL 2556, *Wire and Cable Test Methods* , HF to indicate halogen free. See in UL 2885, *Outline of Investigation for Acid Gas, Acidity and Conductivity of Combusted Materials* , and LSHF to indicate halogen free and low-smoke characteristics. See IEC 61034-2, *Measurement of smoke density of cables burning under defined conditions — Part 2: Test procedure and requirements* .

Part III. Wiring Methods, Applications and Installations Inside Buildings

722.110 Application and Installation of Raceways, Cable Routing Assemblies, and Cable Trays.

(A) Application of Listed Communications Raceways in Buildings.

Permitted and nonpermitted applications of listed communications raceways shall be in accordance with Table 722.110(A) .

Table 722.110(A) Applications of Listed Communications Raceways in Buildings.

Applications		Listed Communications Raceway Type		
		Plenum	Riser	General-Purpose
In ducts specifically fabricated for environmental air as described in 720.22(B)	In fabricated ducts	N	N	N
	In metal raceway that complies with 300.25(B)	N	N	N
In other spaces used for environmental air (plenums) as described in 720.22(C)	In other spaces used for environmental air	Y	N	N
	In metal raceway that complies with 300.25(C)	Y	Y	Y
	In plenum cable routing assemblies	N	N	N
	Supported by open metal cable trays	Y	N	N
	Supported by solid bottom metal cable trays with solid metal covers	Y	Y	Y
In risers	In vertical runs	Y	Y	N
	In metal raceways	Y	Y	Y
	In fireproof shafts	Y	Y	Y
	In plenum cable routing assemblies	N	N	N
	In riser cable routing assemblies	N	N	N
	In one- and two-family dwellings	Y	Y	Y
Within buildings in other than air-handling spaces and risers	General	Y	Y	Y
	In one- and two-family dwellings	Y	Y	Y
	In multifamily dwellings	Y	Y	Y
	In nonconcealed spaces	Y	Y	Y
	Supported by cable trays	Y	Y	Y
	Under carpet, modular flooring, and planks	N	N	N
	In distributing frames and cross-connect arrays	Y	Y	Y
	In any raceway recognized in Chapter 3	Y	Y	Y
	In plenum cable routing assemblies	N	N	N
	In riser cable routing assemblies	N	N	N
	In general-purpose cable routing assemblies	N	N	N

Note: An “N” in the table indicates that the communications raceway type shall not be installed in the application. A “Y” indicates that the communications raceway type shall be permitted to be installed in the application, subject to the limitations described in 722.111 and 722.131.

(B) Application of Listed Cable Routing Assemblies.

Permitted and nonpermitted applications of listed cable routing assemblies shall be in accordance with Table 722.110(B) .

Table 722.110(B) Applications of Listed Cable Routing Assemblies in Buildings.

Applications		Listed Cable Routing Assembly Type		
		Plenum	Riser	General-Purpose
In ducts specifically fabricated for environmental air as described in 720.22(B)	In fabricated ducts	N	N	N
	In metal raceway that complies with 300.25(B)	N	N	N
In other spaces used for environmental air (plenums) as described in 720.22(C)	In other spaces used for environmental air	Y	N	N
	In metal raceway that complies with 300.25(C)	Y	Y	Y
	In plenum cable routing assemblies	N	N	N
	Supported by open metal cable trays	Y	N	N
	Supported by solid bottom metal cable trays with solid metal covers	Y	Y	Y
In risers	In vertical runs	Y	Y	N
	In metal raceways	Y	Y	Y

In fireproof shafts	Y	Y	Y

In plenum cable routing assemblies	N	N	N

In riser cable routing assemblies	N	N	N

	In one- and two-family dwellings	Y	Y	Y
Within buildings in other than air-handling spaces and risers	General	Y	Y	Y
	In one- and two-family dwellings	Y	Y	Y
	In multifamily dwellings	Y	Y	Y
	In nonconcealed spaces	Y	Y	Y
	Supported by cable trays	Y	Y	Y
	Under carpet, modular flooring, and planks	N	N	N
	In distributing frames and cross-connect arrays	Y	Y	Y
	In any raceway recognized in Chapter 3	Y	Y	Y
	In plenum cable routing assemblies	N	N	N
	In riser cable routing assemblies	N	N	N
	In general-purpose cable routing assemblies	N	N	N

Note: An “N” in the table indicates that the cable routing assembly type shall not be installed in the application. A “Y” indicates that the cable routing assembly type shall be permitted to be installed in the application subject to the limitations described in 722.131.

722.111 Installation of Raceways, Cable Routing Assemblies, and Cable Trays.

(A) Types of Raceways.

Wires and cables shall be permitted to be installed in raceways that comply with 722.111(A)(1) , 722.111(A)(2) , or 722.111(A)(3) . Medium-power network-powered broadband communications cables shall not be installed in raceways that comply with 722.111(A)(2) .

(1) Permitted Raceways.

Wires and raceways shall be permitted to be in any raceway included in Chapter 3 . The raceways shall be installed in accordance with Chapter 3 .

(2) Communications Raceways.

Wires and cables shall be permitted to be installed in plenum communications raceways, riser communications raceways, and general-purpose communications raceways selected in accordance with Table 722.110(A) , listed in accordance with 722.110(A) , and installed in accordance with 722.131 and 362.24 through 362.56, where the requirements applicable to electrical nonmetallic tubing (ENT) apply.

(3) Innerduct for Communications Wires and Cables, Coaxial Cables, or Network-Powered Broadband Communications Cables.

Listed plenum communications raceways, listed riser communications raceways, and listed general-purpose communications raceways selected in accordance with Table 722.110(A) shall be permitted to be installed as innerduct in any type of listed raceway permitted in Chapter 3 .

(4) Raceway Fill.

The raceway fill requirements of 720.6(B)(1) shall apply to medium-power network-powered broadband communications cables.

(5) Permitted Substitutions.

Substitutions of listed communications raceways shall be permitted in accordance with Table 722.111(A)(5) .

Table 722.111(A)(5) Permitted Substitutions of Listed Communications Raceways

Raceway Type	Permitted Substitution
Riser communications raceway	Plenum communications raceway
General purpose communications raceway	Plenum communications raceway, riser communications raceway

(B) Cable Routing Assemblies.

Cables shall be permitted to be installed in plenum cable routing assemblies, riser cable routing assemblies, and general-purpose cable routing assemblies selected in accordance with Table 722.110(B) , listed in accordance with 722.110(B) , and installed in accordance with 722.111(B)(1) , 722.111(B)(2) , and 722.131 .

(1) Horizontal Support.

Cable routing assemblies shall be supported where run horizontally at intervals not to exceed 900 mm (3 ft) and at each end or joint, unless listed for other support intervals. In no case shall the distance between supports exceed 3 m (10 ft).

(2) Vertical Support.

Vertical runs of cable routing assemblies shall be supported at intervals not exceeding 1.2 m (4 ft), unless listed for other support intervals, and shall not have more than one joint between supports.

(3) Permitted Substitutions.

Substitutions of listed cable routing assemblies shall be permitted in accordance with Table 722.111(B)(3) .

Table 722.111(B)(3) Permitted Substitutions of Listed Communications Raceways

Raceway Type	Permitted Substitution
Riser communications raceway	Plenum communications raceway
General purpose communications raceway	Plenum communications raceway, riser communications raceway

(C) Cable Trays.

Wires and cables and communications raceways shall be permitted to be installed in metal or listed nonmetallic cable tray systems. Ladder cable trays shall be permitted to support cable routing assemblies.

722.112

Table 722.112 Limited-Energy Cable Type

Plenum limited-energy cables	CMP	Communications plenum cables
	CATVP	Community antenna television plenum cables
	BLP	Network-powered broadband communications low-power plenum cables
	FPLP	Power-limited fire alarm plenum cables
	CL4P	Class 4 plenum cables
	CL3P	Class 3 plenum cables
	CL2P	Class 2 plenum cables
	OFNP	Nonconductive optical fiber plenum cables
	OFCP	Conductive optical fiber plenum cables
Riser limited-energy cables	CMR	Communications riser cables
	CATVR	Community antenna television riser cables
	BLR	Network-powered broadband communications low-power riser cables
	FPLR	Power-limited fire alarm riser cables
	CL4R	Class 4 riser cables
	CL3R	Class 3 riser cables
	CL2R	Class 2 riser cables
	OFNR	Nonconductive optical fiber riser cables
	OFCR	Conductive optical fiber riser cables
General-purpose limited-energy cables	CMG, CM	Communications general-purpose cables
	CATV	Community antenna television general-purpose cables
	BL	Network-powered broadband communications low-power general-purpose cables
	FPL	Power-limited fire alarm general-purpose cables
	CL4	Class 4 general-purpose cables
	PLTC	Power-limited tray cables
	CL3	Class 3 general-purpose cables
	CL2	Class 2 general-purpose cables
	OFNG, OFN	Nonconductive optical fiber general-purpose cables
	OFCG, OFC	Conductive Optical Fiber general-purpose cables
Limited-use limited-energy cables	CMX	Communications limited use cables

	CATVX	Community antenna television limited use cables
	BLX	Network-powered broadband communications low-power limited use cables
	CL3X	Class 3 limited use cables
	CL2X	Class 2 limited use cables
Specialty use limited-energy cables	CMUC	Under-carpet communications wires and cables

(A) General.

Unless prohibited by this section, plenum, riser, general-purpose, and limited-use limited-energy cables shall be permitted to be installed in the same raceway, cable tray, box, enclosure, or cable routing assembly. Installations shall comply with 722.112(B) through 722.112(H).

(B) Two or More Class 2, Class 3, or Class 4 Circuits.

Conductors of two or more limited energy circuits of the same class shall be permitted within the same limited energy cable.

(C) (C) Class 2, Class 3, and Class 4 Circuits with the Same Limited Energy Cable.

(1) Class 3 Cables.

Class 2 circuits shall be permitted to use listed Class 3 cables.

(2) Dual-Listed Class 3/Class 4 Cables.

Class 2 and Class 3 circuits shall be permitted to use dual-listed Class 3/Class 4 cables.

(D) Class 2 and Class 3 Circuits with Communications Circuits.

(1) Communications Cables.

Conductors of one or more Class 2 or Class 3 circuits shall be permitted in the same cable with conductors of communications circuits. The cable shall be listed as a communications cable.

(2) Composite Cables.

Cables constructed of individually listed Class 2, Class 3, and communications cables under a common jacket shall be permitted to be classified and listed as communications cables. The fire resistance rating of the composite cable shall be determined by the combustion characteristics of the composite cable.

(E) Class 2, Class 3, or Class 4 Cables with Other Limited Energy Cables.

(1) Limited-Use Cables.

Plenum, riser, general-purpose, and limited use limited energy cables shall be permitted in the same enclosure or raceway.

(2) Other Than Limited-Use Cables.

Plenum, riser, and general-purpose limited energy cables shall be permitted in the same enclosure, cable tray, raceway, or cable routing assembly.

(F) Power-Limited Fire Alarm Circuits.

(1) Multiple PLFA Circuits.

Cable and conductors of two or more power-limited fire alarm circuits shall be permitted within the same cable, enclosure, cable tray, raceway, or cable routing assembly.

(2) With Network-Powered Broadband.

Low-power network-powered broadband communications circuits shall be permitted in the same enclosure, cable tray, raceway, or cable routing assembly with PLFA cables.

(3) With Class 2 Circuits.

Conductors of one or more Class 2 circuits shall be permitted within the same cable, enclosure, cable tray, raceway, or cable routing assembly with conductors of power-limited fire alarm circuits if the insulation of the Class 2 circuit conductors in the cable, enclosure, raceway, or cable routing assembly is at least that required by the power-limited fire alarm circuits.

(4) With Class 3 or Communications Circuits.

Cable and conductors of Class 3 and communications circuits shall be permitted within the same cable, enclosure, cable tray, raceway, or cable routing assembly with cables and conductors of power-limited fire alarm circuits.

(5) With 4 Circuits.

Class 4 circuits shall be permitted in the same cable with power-limited fire alarm circuits if the cable is dual-listed.

(6) Audio System Circuits and PLFA Circuits.

Audio system circuits described in 640.9(C) and installed using Class 2, Class 3, or Class 4 wiring methods in compliance with 722.136 shall not be installed in the same cable, cable tray, raceway, or cable routing assembly with PLFA circuits or cables.

(G) Manholes.

Outside plant communications, CATV, and optical fiber cables shall be permitted to be installed together in manholes.

> Informational Note: See IEEE C2-2023, *National Electrical Safety Code*, Rules 323 and 341 for information on cable installation in manholes.

(H) Limited-Use and Under-Carpet Limited-Energy Cables.

Limited-use and under-carpet limited-energy cables shall not be installed in cable trays or cable routing assemblies.

722.113 Limited-Energy Circuits with Electric Light, Power, Class 1, Non-Power-Limited Fire Alarm, and Medium-Power Network-Powered Broadband Communications Circuits in Raceways, Compartments, and Boxes.

Separation shall be provided in accordance with 722.112(A) for limited energy cables and conductors, except as provided in 722.164 for optical fiber cables.

(A) General.

Limited energy cables shall be separated by at least 50 mm (2 in.) from conductors of any electric light, power, Class 1, non-power-limited fire alarm, or medium-power network-powered broadband communications circuits and shall not be placed the same raceway, compartment, enclosure, manhole, outlet box, device box, or similar, unless permitted by the 722.113(A)(1) through 722.113(A)(10).

> *Exception: Low-power and medium-power network-powered broadband communications circuit cables shall be permitted in the same raceway, cable tray, box, enclosure, or cable routing assembly.*

(1) Separated by Barriers.

Limited energy cables shall be permitted to be placed in any raceway, compartment, outlet box, junction box, or other enclosure with conductors of electric light, power, Class 1, non-power-limited fire alarm, or medium-power network-powered broadband communications circuits if the conductors of electric light, power, Class 1, non-power-limited fire alarm, and medium-power network-powered broadband communications circuits are separated from the limited energy and cables by a permanent barrier that maintains the 50 mm (2 in.) separation or a listed divider.

(2) Raceways Within Enclosures.

Limited energy cables shall be permitted to share the same enclosure with other systems if the limited energy cables are separated by a raceway within the enclosure.

(3) Associated Systems Within Enclosures.

Limited energy cables shall be permitted to be placed in outlet boxes, junction boxes, compartments, or similar with power conductors where such conductors are introduced solely for power supply to the limited energy equipment and 722.113(A)(3)(a) or 722.113(A)(3)(b) applies.

(a) The power circuit conductors shall be routed within the enclosure to maintain a minimum 6 mm (0.25 in.) separation from the limited energy cables.

(b) The circuit conductors operate at 150 volts or less to ground and the limited energy circuit conductors shall be either of the following:

(3) Installed as a Class 1 circuit

(4) A limited energy cable of CL3, CL3R, CL3P or a permitted substitute and the conductors that emerge from the cable jacket are separated by a minimum 6 mm (0.25 in.) or by a nonconductive barrier from all other conductors

(4) Enclosures with Single Opening.

Circuit conductors of limited energy cables entering compartments, enclosures, device boxes, outlet boxes, or similar shall be permitted to be installed with Class 1, non-power-limited fire alarm, and medium-power network-powered broadband communications circuits where they are introduced solely to connect the equipment connected to the limited energy circuits. If the limited energy circuit conductors must enter an enclosure that is provided with a single opening, they shall be permitted to enter through a single fitting (such as a tee) if the conductors are separated from the conductors of the other circuits by a continuous and firmly fixed nonconductor, such as flexible tubing.

(5) Elevators.

(a) *Traveling Cables* . Separation of circuits shall not be required in elevator traveling cables constructed in accordance with 620.36 .

(b) *Hoistways* . In hoistways, cables shall be installed in rigid metal conduit, rigid nonmetallic conduit, intermediate metal conduit, liquidtight flexible nonmetallic conduit, or electrical metallic tubing. For elevators or similar equipment, these conductors shall be permitted to be installed as provided in 620.21 .

(6) In Raceways or Cables.

Separation shall not be required if either of the following applies:

(1) The conductors of electric light, power, Class 1, non-power-limited fire alarm, and medium-power network-powered broadband communications circuits are in a raceway or in metal-sheathed, metal-clad, nonmetallic-sheathed, Type AC or Type UF cables.

(2) The limited energy cable conductors are installed in a raceway or in metal-sheathed, metal-clad, nonmetallic-sheathed, Type TC, or Type UF cables.

(7) Protected by Firmly Fixed Nonconductors.

Separation shall not be required if the limited energy cables are permanently separated from the conductors of electric light, power, Class 1, non-power-limited fire alarm, and medium-power network-powered broadband communications circuits by a continuous and firmly fixed nonconductor, such as porcelain tubes or flexible tubing, in addition to the insulation on the wire.

(8) Manholes.

Underground limited energy circuit conductors and cables in a manhole shall be permitted to be installed with Class 1, non-power-limited fire alarm, and medium-power network-powered broadband communications circuits if one of the following conditions is met:

(1) The electric light, power, Class 1, non-power-limited fire alarm, and medium-power network-powered broadband communications circuit conductors are in a metal-enclosed cable or Type UF cable.

(2) The limited energy circuit conductors are permanently and effectively separated from the conductors of other circuits by a continuous and firmly fixed nonconductor, such as flexible tubing, in addition to the insulation or covering on the wire.

(3) The limited energy circuit conductors are permanently and effectively separated from conductors of the other circuits and securely fastened to racks, insulators, or other approved supports.

(9) Cable Trays.

Limited energy circuit conductors shall be permitted to be installed in cable trays if the conductors of the electric light, Class 1, and non-power-limited fire alarm circuits are separated by a solid fixed barrier of a material compatible with the cable tray or if the limited energy circuits are installed in Type MC cable.

(10) If Protected.

Limited energy circuits shall be permitted to be installed together with the conductors of electric light, power, Class 1, non-power-limited fire alarm, and medium-power network-powered broadband communications circuits if they are functionally associated and installed using Class 1 wiring methods in accordance with 724.46.

722.120 Application and Installation of Limited Energy Cables in Buildings.

The application and installation of limited-energy cables shall comply with Table 722.120 .

Table 722.120 Applications of Limited-Energy Cables

Applications		Cable Type [1]					
		Plenum	Riser	General-Purpose	Limited-Use	Under Carpet	PLTC
In ducts specifically fabricated for environmental air as described in 720.22(C) [2]	Cables in lengths as short as practicable to perform the required function	Y	N	N	N	N	N
	In metal raceway that complies with 720.22(B)	Y	Y	Y	Y	N	Y
In other spaces used for environmental air (plenums) as described in 720.22(C)	Cables in other spaces used for environmental air	Y	N	N	N	N	N
	Cables in metal raceway that complies with 720.22(C)	Y	Y	Y	Y	N	Y
	Cables in plenum communications raceways	Y	N	N	N	N	N
	Cables in plenum cable routing assemblies	Y	N	N	N	N	N
	Cables supported by open metal cable trays	Y	N	N	N	N	N
	Cables, or cables installed in raceways or cable routing assemblies supported by solid bottom metal cable trays with solid metal covers	Y	Y	Y	Y	N	Y
In risers and vertical runs	Cables in vertical runs penetrating one or more floors and in vertical runs in a shaft	Y	Y	N	N	N	N
	Cables in metal raceways	Y	Y	Y	Y	N	Y
	Cables in fireproof shafts	Y	Y	Y	N	N	Y
	Cables in plenum communications raceways	Y	Y	N	N	N	N
	Cables in plenum cable routing assemblies	Y	Y	N	N	N	N
	Cables in riser communications raceways	Y	Y	N	N	N	N
	Cables in riser cable routing assemblies	Y	Y	N	N	N	N
	Cables in one- and two-family dwellings	Y	Y	Y	Y [3]	N	Y
Cables and innerducts installed in metal raceways in a riser having firestops at each floor [2]	Cables	Y	Y	Y	Y	N	Y
	Cables in plenum communications raceways (innerduct)	Y	Y	Y	Y	N	Y
	Cables in riser communications raceways (innerduct)	Y	Y	Y	Y	N	Y
	Cables in general-purpose communications raceways (innerduct)	Y	Y	Y	Y	N	Y
In fireproof riser shafts having firestops at each floor [2]	Cables	Y	Y	Y	N	N	Y
	Cables in plenum communications raceways or plenum cable routing assemblies	Y	Y	Y	N	N	Y
	Cables in riser communications raceways or riser cable routing assemblies	Y	Y	Y	N	N	Y
	Cables in general-purpose communications raceways or general-purpose cable routing assemblies	Y	Y	Y	N	N	Y
In cable trays	Outdoors	N	N	N	N	N	Y
	Cables, or cables in plenum, riser, or general-purpose communications raceways, installed indoors	Y	Y	Y	N	N	Y
In cross-connect arrays	Cables, and cables in plenum, riser, or general-purpose communications raceways or cable routing assemblies	Y	Y	Y	N	N	Y
In one-, two-, and multifamily dwellings, and in building locations other than the locations covered above	Cables	Y	Y	Y	Y [3]	N	Y
	Cables in plenum, riser, or general-purpose communications raceways or cable routing assemblies, or raceways recognized in Chapter 3	Y	Y	Y	Y	N	Y

Cables in nonconcealed spaces	Y	Y	Y	Y[4]	Y	Y

Under carpet, floor covering, modular flooring, and planks	N	N	N	N	Y	N

[1] "N" indicates that the cable type shall not be installed in the application. "Y" indicates that the cable type shall be permitted to be installed in the application, subject to any limitations described in this article or the articles described in 722.4(C).

[2] In 720.22(B), cables shall be permitted in ducts specifically fabricated for environmental air only if directly associated with the air distribution system.

[3] Limited-use cable shall be permitted to be installed only in one-, two-, and multifamily dwellings and only if the cable is smaller in diameter than 6.35 mm (0.25 in.).

[4] The exposed length of cable shall not exceed 3.05 m (10 ft).

722.121 Installations.

(A) Industrial Establishments.

In industrial establishments where the conditions of maintenance and supervision ensure that only qualified persons service the installation, Type PLTC cable shall be permitted in accordance with either of the following:

(1) Where the cable is not subject to physical damage, Type PLTC cable that complies with the crush and impact requirements of Type MC cable and is identified as Type PLTC-ER for such use shall be permitted to be exposed between the cable tray and the utilization equipment or device. The cable shall be continuously supported and protected against physical damage using mechanical protection such as dedicated struts, angles, or channels. The cable shall be supported and secured at intervals not exceeding 1.8 m (6 ft). Where not subject to physical damage, Type PLTC-ER cable shall be permitted to transition between cable trays and between cable trays and utilization equipment or devices for a distance not to exceed 1.8 m (6 ft) without continuous support. The cable shall be mechanically supported where exiting the cable tray to ensure that the minimum bending radius is not exceeded.

(2) Type PLTC cable, with a metallic sheath or armor in accordance with 722.100(A)(6), shall be permitted to be installed exposed. The cable shall be continuously supported and protected against physical damage using mechanical protection such as dedicated struts, angles, or channels. The cable shall be secured at intervals not exceeding 1.8 m (6 ft).

722.122 Limited-Energy Cable Substitutions.

The substitutions for cables listed in Table 722.120 and illustrated in Figure 722.122 shall be permitted. Where substitute cables are installed, the installation requirements of the articles described in 722.4 shall also apply. CI cables shall be permitted to be installed to provide 2-hour circuit integrity. See 722.180(A) .

Informational Note: See 722.100 for information on Types CMP, CMR, CM, and CMX.

Table 722.122 Permitted Limited-Energy Cable Substitutions

Cable Type	Permitted Substitutions
CL3P	CMP
CL2P	CMP, CL3P
CL3R	CMP, CL3P, CMR
CL2R	CMP, CL3P, CL2P, CMR, CL3R
PLTC	None
CL3	CMP, CL3P, CMR, CL3R, CMG, CM, PLTC
CL2	CMP, CL3P, CL2P, CMR, CL3R, CL2R, CMG, CM, PLTC, CL3
CL3X	CMP, CL3P, CMR, CL3R, CMG, CM, PLTC, CL3, CMX
CL2X	CMP, CL3P, CL2P, CMR, CL3R, CL2R, CMG, CM, PLTC, CL3, CL2, CMX, CL3X
FPLP	CMP
FPLR	CMP, FPLP, CMR
FPL	CMP, FPLP, CMR, FPLR, CMG, CM
OFNP	None
OFCP	OFNP
OFNR	OFNP
OFCR	OFNP, OFCP, OFNR
OFNG, OFN	OFNP, OFNR
OFCG, OFC	OFNP, OFCP, OFNR, OFCR, OFNG, OFN
CMUC	None

Figure 722.122 Limited-Energy and Communications Cable Substitution Hierarchy.

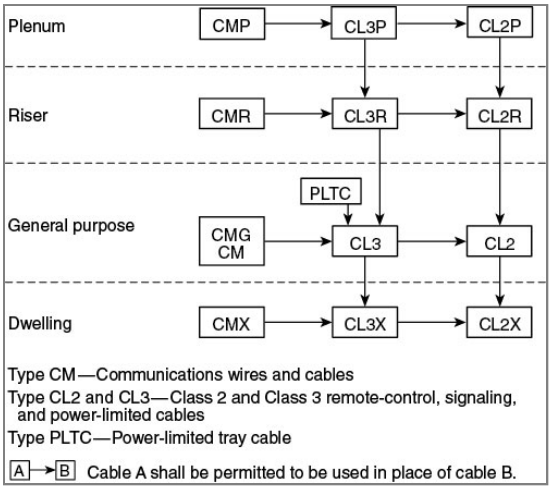

722.130 Application of Cables Used for Communications Circuits, Communications Wires, Cables, and Raceways and Listed Cable Routing Assemblies.

Permitted and nonpermitted applications of listed communications wires and cables, coaxial cables, network-powered broadband communications system cables shall be in accordance with Table 722.130 .

The permitted applications shall be subject to the installation requirements of 722.110 .

Table 722.130 Applications of Listed Communications Wires, Cables, Listed CATV-Type Coaxial Cables, and Listed Network-Powered Broadband Communications Cables in Buildings

Applications		Wire and Cable Type									
		Plenum	Riser	BMR	General-Purpose	BM	Limited-Use	Under-carpet	BMU, BLU	Hybrid Power and Communications Cables	Communications Wires
In ducts specifically fabricated for environmental air as described in 720.22(B)	In fabricated ducts	Y	N	N	N	N	N	N	N	N	N
	In metal raceway that complies with 720.22(B)	Y	Y	Y	Y	Y	Y	N	N	N	Y
In other spaces used for environmental air (plenums) as described in 720.22(C)	In other spaces used for environmental air	Y	N	N	N	N	N	N	N	N	N
	In metal raceway that complies with 720.22(C)	Y	Y	Y	Y	Y	Y	N	N	N	Y

In plenum communications raceways	Y	N	N	N	N	N	N	N	N	N

In plenum cable routing assemblies	Y	N	N	N	N	N	N	N	N	N

Supported by open metal cable trays	Y	N	N	N	N	N	N	N	N	N

	Supported by solid bottom metal cable trays with solid metal covers	Y	Y	Y	Y	Y	Y	N	N	N	N
In risers	In vertical runs	Y	Y	Y	N	N	N	N	N	N	N

In metal raceways	Y	Y	Y	Y	Y	Y	N	N	N	N

In fireproof shafts	Y	Y	Y	Y	Y	Y	N	N	N	N

In plenum communications raceways	Y	Y	N	N	N	N	N	N	N	N

In plenum cable routing assemblies	Y	Y	N	N	N	N	N	N	N	N

In riser communications raceways	Y	Y	N	N	N	N	N	N	N	N

In riser cable routing assemblies	Y	Y	N	N	N	N	N	N	N	N

Within buildings in other than air-handling spaces and risers	In one- and two-family dwellings	Y	Y	Y	Y	Y	Y	N	N	Y	N
	General	Y	Y	Y	Y	Y	Y	N	N	N	N
	In one- and two-family dwellings	Y	Y	Y	Y	Y	Y	Y	N	Y	N
	In multifamily dwellings	Y	Y	Y	Y	Y	Y	Y	N	N	N

In nonconcealed spaces	Y	Y	Y	Y	Y	Y	Y	N	N	N

Supported by cable trays	Y	Y	Y	Y	Y	N	N	N	N	N

Under carpet, modular flooring, and planks	N	N	N	N	N	N	Y	N	N	N

In distributing frames and cross-connect arrays	Y	Y	N	Y	N	N	N	N	N	Y
In rigid metal conduit (RMC) and intermediate metal conduit (IMC)	Y	Y	Y	Y	Y	Y	Y	Y	Y	Y
In any raceway recognized in Chapter 3	Y	Y	Y	Y	Y	Y	N	N	N	Y
In plenum communications raceways	Y	Y	N	Y	N	N	N	N	N	Y
In plenum cable routing assemblies	Y	Y	N	Y	N	N	N	N	N	Y
In riser communications raceways	Y	Y	N	Y	N	N	N	N	N	Y
In riser cable routing assemblies	Y	Y	N	Y	N	N	N	N	N	Y
In general-purpose communications raceways	Y	Y	N	Y	N	N	N	N	N	Y
In general-purpose cable routing assemblies	Y	Y	N	Y	N	N	N	N	N	Y

Note: An “N” in the table indicates that the cable type shall not be installed in the application. A “Y” indicates that the cable type shall be permitted to be installed in the application subject to the limitations described in 722.131. The Riser column includes all riser cables except BMR, and the General-Purpose column includes all general-purpose cables except BM.

Informational Note No. 1: Table 722.110 covers the applications of listed communications wires, cables, and raceways in buildings.

Informational Note No. 2: See 722.131(B) for restrictions to the installation of communications cables in fabricated ducts.

722.131 Installation of Cables Used for Communications Circuits, Communications Wires, Cable Routing Assemblies, and Communications Raceways.

(A) General.

Installation of cables used for communications circuits, communications wires, cable routing assemblies, and communications raceways shall comply with 722.131(A) through 722.131(L) . Installation of cable routing assemblies and communications raceways shall comply also with 722.110 . Types of cables used by this section shall be identified in Table 722.131(A) .

Table 722.131(A) Cables Used for Communications Circuits

	Listed Cable Types
Plenum cables	CMP, CATVP, BLP, OFNP, OFCP
Riser cables	CMR, CATVR, BMR, BLR, OFNR, OFCR
General-purpose cables	CMG, CM, CATV, BM, BL, OFNG, OFN, OFCG, OFC
Limited-use cables	CMX, CATVX, BLX
Under-carpet	CMUC
Underground	BMU, BLU

(B) Ducts Specifically Fabricated for Environmental Air.

Installations of cables used for communications circuits, communications wires, cable routing assemblies, and communications raceways in ducts specifically fabricated for environmental air shall be in accordance with 722.131(B)(1) and 722.131(B)(2) .

(1) Uses Permitted.

The following cables shall be permitted in ducts specifically fabricated for environmental air as described in 720.22(B) if they are directly associated with the air distribution system:

(1) Plenum cables up to 1.22 m (4 ft) in length

(2) Plenum, rise, general-purpose, and limited-use cables installed in raceways that are installed in compliance with 720.22(B)

(2) Uses Not Permitted.

The following cables, wires, cable routing assemblies, and communications raceways shall not be permitted in ducts specifically fabricated for environmental air as described in 720.22(B) :

(1) Plenum, riser, and general-purpose communications raceways

(2) Plenum, riser, and general-purpose cable routing assemblies

(3) Riser, general-purpose, and limited-use cables

(4) Type CMUC cables and wires

(5) Types BMU and BLU cables

(6) Communications wires

(7) Hybrid power and communications cables

Informational Note: See NFPA 90A-2024, *Standard for the Installation of Air-Conditioning and Ventilating Systems* , for information on fire protection of wiring installed in fabricated ducts.

(C) Other Spaces Used for Environmental Air (Plenums).

Installations of cables used for communications circuits, communications wires, cable routing assemblies, and communications raceways in other spaces used for environmental air (plenums) shall be in accordance with 722.131(C)(1) and 722.131(C)(2) .

(1) Uses Permitted.

The following cables, wires, cable routing assemblies, and communications raceways shall be permitted in other spaces used for environmental air as described in 720.22(C) :

(1) Plenum cables

(2) Plenum communications raceways

(3) Plenum cable routing assemblies

(4) Plenum cables installed in plenum communications raceways

(5) Plenum cables installed in plenum cable routing assemblies

(6) Plenum cables and plenum communications raceways supported by open metal cable tray systems

(7) Plenum, riser, general-purpose, and limited-use cables, and communications wires installed in raceways that are installed in compliance with 720.22(C)

(8) Plenum, riser, general-purpose, limited-use cables and plenum, riser, and general-purpose communications raceways supported by solid bottom metal cable trays with solid metal covers in other spaces used for environmental air (plenums) as described in 720.22(C)

(9) Plenum, riser, general-purpose, and limited-use cables installed in plenum, riser, and general-purpose communications raceways supported by solid bottom metal cable trays with solid metal covers in other spaces used for environmental air (plenums) as described in 720.22(C)

(2) Uses Not Permitted.

The following cables, wires, cable routing assemblies, and communications raceways shall not be permitted in other spaces used for environmental air as described in 720.22(C) :

(1) Riser, general-purpose, and limited-use cables

(2) Riser and general-purpose communications raceways

(3) Riser and general-purpose cable routing assemblies

(4) Type CMUC cables and wires

(5) Types BMR, BM, BMU, and BLU cables

(6) Communications wires

(7) Hybrid power and communications cables

Informational Note: See NFPA 90A-2024, *Standard for the Installation of Air-Conditioning and Ventilating Systems* , for information on fire protection of wiring installed in other spaces used for environmental air.

(D) Risers — Cables, Cable Routing Assemblies, and Communications Raceways in Vertical Runs.

Installations of cables used for communications circuits, communications wires, cable routing assemblies, and communications raceways in risers shall be in accordance with 722.131(D)(1) and 722.131(D)(2) .

(1) Uses Permitted.

The following cables, cable routing assemblies, and communications raceways shall be permitted in vertical runs penetrating one or more floors and in vertical runs in a shaft:

(1) Plenum and riser cables

(2) Plenum and riser communications raceways

(3) Plenum and riser cable routing assemblies

(4) Plenum and riser cables installed in the following:

  (5) Plenum communications raceways

  (6) Riser communications raceways

  (7) Plenum cable routing assemblies

  (8) Riser cable routing assemblies

(2) Uses Not Permitted.

The following cables, wires, cable routing assemblies, and communications raceways shall not be permitted in risers:

(1) General-purpose and limited-use cables

(2) General-purpose communications raceways

(3) General-purpose cable routing assemblies

(4) Type CMUC cables and wires

(5) Types BMR, BM, BMU, and BLU cables

(6) Communications wires

(7) Hybrid power and communications cables

Informational Note: See 720.21 for firestop requirements for floor penetrations.

(E) Risers — Cables and Innerducts in Metal Raceways.

Installations of cables used for communications circuits, communications wires, cable routing assemblies, and communications raceways in metal raceways in a riser having firestops at each floor shall be in accordance with 722.131(E)(1) and 722.131(E)(2) .

(1) Uses Permitted.

The following cables and innerducts shall be permitted in metal raceways in a riser having firestops at each floor:

(1) Plenum, riser, general-purpose, and limited-use cables

(2) Plenum, riser, and general-purpose communications raceways (innerduct)

(3) Plenum, riser, general-purpose, and limited-use cables installed in the following:

(4) Plenum communications raceways (innerduct)

(5) Riser communications raceways (innerduct)

(6) General-purpose communications raceways (innerduct)

(2) Uses Not Permitted.

The following cables, wires, cable routing assemblies, and communications raceways shall not be permitted in metal raceways in a riser having firestops at each floor:

(1) Plenum, riser, and general-purpose cable routing assemblies

(2) Type CMUC cables and wires

(3) Types BMR, BM, BMU, and BLU cables

(4) Communications wires

(5) Hybrid power and communications cables

Informational Note: See 720.21 for firestop requirements for floor penetrations.

(F) Risers — Cables, Cable Routing Assemblies, and Communications Raceways in Fireproof Shafts.

Installations of cables used for communications circuits, communications wires, cable routing assemblies, and communications raceways in fireproof riser shafts having firestops at each floor shall be in accordance with 722.131(F)(1) and 722.131(F)(2) .

(1) Uses Permitted.

The following cables, cable routing assemblies, and communications raceways shall be permitted to be installed in fireproof riser shafts having firestops at each floor:

(1) Plenum, riser, general-purpose, and limited-use cables

(2) Plenum, riser, and general-purpose communications raceways

(3) Plenum, riser, and general-purpose cable routing assemblies

(4) Plenum, riser, general-purpose, and limited-use cables installed in the following:

(5) Plenum communications raceways

(6) Riser communications raceways

(7) General-purpose communications raceways

(8) Plenum cable routing assemblies

(9) Riser cable routing assemblies

(10) General-purpose cable routing assemblies

(2) Uses Not Permitted.

The following cables, wires, cable routing assemblies, and communications raceways shall not be permitted in metal raceways in fireproof riser shafts having firestops at each floor:

(1) Type CMUC cables and wires

(2) Type BMU and BLU cables

(3) Communications wires

(4) Hybrid power and communications cables

Informational Note: See 720.21 for firestop requirements for floor penetrations.

(G) Risers — One- and Two-Family Dwellings.

Installations of cables used for communications circuits, communications wires, cable routing assemblies, and communications raceways in risers in one- and two-family dwellings shafts shall be in accordance with 722.131(G)(1) and 722.131(G)(2) .

(1) Uses Permitted.

The following cables, cable routing assemblies, and communications raceways shall be permitted in one- and two-family dwellings:

(1) Plenum, riser, and general-purpose cables

(2) Limited-use cables less than 6 mm (0.25 in.) in diameter

(3) Plenum, riser, and general-purpose communications raceways

(4) Plenum, riser, and general-purpose cable routing assemblies

(5) Plenum, riser, and general-purpose cables installed in the following:

(6) Plenum communications raceways

(7) Riser communications raceways

(8) General-purpose communications raceways

(9) Plenum cable routing assemblies

(10) Riser cable routing assemblies

(11) General-purpose cable routing assemblies

(2) Uses Not Permitted.

The following cables and wires shall not be permitted in risers in one- and two-family dwellings:

(1) Type CMUC cables and wires

(2) Type BMU and BLU cables

(3) Communications wires

(4) Hybrid power and communications cables

(H) Cable Trays.

Installations of cables used for communications circuits, communications wires, cable routing assemblies, and communications raceways supported by cable trays shall be in accordance with 722.131(H)(1) and 722.131(H)(2) .

(1) Uses Permitted.

The following wires, cables, and communications raceways shall be permitted to be supported by cable trays:

(1) Plenum, riser, and general-purpose cables

(2) Plenum, riser, and general-purpose communications raceways

(3) Communications wires, plenum, riser, and general-purpose cables installed in the following:

(4) Plenum communications raceways

(5) Riser communications raceways

(6) General-purpose communications raceways

(2) Uses Not Permitted.

The following cables and wires shall not be supported by cable trays:

(1) Limited-use cables

(2) Type CMUC cables and wires

(3) Type BMU and BLU cables

(4) Communications wires

(5) Hybrid power and communications cables

(I) Distributing Frames and Cross-Connect Arrays.

Installations of cables used for communications circuits, communications wires, cable routing assemblies, and communications raceways in distributing frames and cross-connect arrays shall be in accordance with 722.131(I)(1) and 722.131(I)(2) .

(1) Uses Permitted.

The following wires, cables, cable routing assemblies, and communications raceways shall be permitted to be installed in distributing frames and cross-connect arrays:

(1) Plenum, riser, general-purpose cables, and communications wires

(2) Plenum, riser, and general-purpose communications raceways

(3) Plenum, riser, and general-purpose cable routing assemblies

(4) Communications wires, plenum, riser, and general-purpose cables installed in the following:

(5) Plenum communications raceways

(6) Riser communications raceways

(7) General-purpose communications raceways

(8) Plenum cable routing assemblies

(9) Riser cable routing assemblies

(10) General-purpose cable routing assemblies

(2) Uses Not Permitted.

The following cables and wires shall not be installed in distributing frames and cross-connect arrays:

(1) Types BMR, BM, BMU, and BLU cables

(2) Limited-use cables

(3) Type CMUC cables and wires

(4) Hybrid power and communications cables

(J) Other Building Locations.

Installations of cables used for communications circuits, cable communications wires, routing assemblies, and communications raceways in building locations other than those covered in 722.131(B) through 722.131(I) shall be in accordance with 722.131(J)(1) and 722.131(J)(2) .

(1) Uses Permitted.

The following wires, cables, cable routing assemblies, and communications raceways shall be permitted to be installed in building locations other than the locations covered in 722.131(B) through 722.131(I) :

(1) Plenum, riser, and general-purpose cables

(2) Limited-use cables with a maximum of 3 m (10 ft) of exposed length in nonconcealed spaces

(3) Plenum, riser, and general-purpose communications raceways

(4) Plenum, riser, and general-purpose cable routing assemblies

(5) Communications wires, plenum, riser, and general-purpose cables installed in the following:

(6) Plenum communications raceways

(7) Riser communications raceways

(8) General-purpose communications raceways

(9) Plenum, riser, and general-purpose cables installed in the following:

(10) Plenum cable routing assemblies

(11) Riser cable routing assemblies

(12) General-purpose cable routing assemblies

(13) Communications wires and plenum, riser, general-purpose, and limited-use cables installed in raceways recognized in Chapter 3

(14) Type CMUC under-carpet communications wires and cables installed under carpet, modular flooring, and planks.

(2) Uses Not Permitted.

The following cables, wires, cable routing assemblies, and communications raceways shall not be installed in building locations other than the locations covered in 722.131(B) through 722.131(I) :

(1) Types BMU and BLU cables

(2) Communications wires

(3) Hybrid power and communications cables

(K) Multifamily Dwellings.

Installations of cables used for communications circuits, communications wires, cable routing assemblies, and communications raceways in multifamily dwellings shall be in accordance with 722.131(K)(1) and 722.131(K)(2) .

(1) Uses Permitted.

The following cables, cable routing assemblies, and communications raceways shall be permitted to be installed in multifamily dwellings in locations other than the locations covered in 722.131(B) through 722.131(G) :

(1) Plenum, riser, and general-purpose cables

(2) Limited-use cables less than 6 mm (0.25 in.) in diameter in nonconcealed spaces

(3) Plenum, riser, and general-purpose communications raceways

(4) Plenum, riser, and general-purpose cable routing assemblies

(5) Communications wires and plenum, riser, and general-purpose cables installed in the following:

(6) Plenum communications raceways

(7) Riser communications raceways

(8) General-purpose communications raceways

(9) Plenum, riser, and general-purpose cables installed in the following:

(10) Plenum cable routing assemblies

(11) Riser cable routing assemblies

(12) General-purpose cable routing assemblies

(13) Communications wires and plenum, riser, general-purpose, and limited-use cables installed in raceways recognized in Chapter 3

(14) Type CMUC under-carpet communications wires and cables installed under carpet, modular flooring, and planks

(2) Uses Not Permitted.

The following cables, cable routing assemblies, and communications raceways shall not be installed in multifamily dwellings in locations other than the locations covered in 722.131(B) through 722.131(G) :

(1) Types BMU and BLU cables

(2) Communications wires

(3) Hybrid power and communications cable.

(L) One- and Two-Family Dwellings.

Installations of cables used for communications circuits, communications wires, cable routing assemblies, and communications raceways in one- and two-family dwellings in locations other than those covered in 722.131(B) through 722.131(F) shall be in accordance with 722.131(L)(1) and 722.131(L)(2) .

(1) Uses Permitted.

The following wires, cables, cable routing assemblies, and communications raceways shall be permitted to be installed in one- and two-family dwellings in locations other than the locations covered in 722.131(B) through 722.131(F) :

(1) Plenum, riser, and general-purpose cables

(2) Limited-use cables less than 6 mm (0.25 in.) in diameter

(3) Plenum, riser, and general-purpose communications raceways

(4) Plenum, riser, and general-purpose cable routing assemblies

(5) Communications wires and plenum, riser, and general-purpose cables installed in the following:

(6) Plenum communications raceways

(7) Riser communications raceways

(8) General-purpose communications raceways

(9) Plenum, riser, and general-purpose cables installed in the following:

(10) Plenum cable routing assemblies

(11) Riser cable routing assemblies

(12) General-purpose cable routing assemblies

(13) Communications wires and plenum, riser, general-purpose, and limited-use cables installed in raceways recognized in Chapter 3

(14) Type CMUC under-carpet communications wires and cables installed under carpet, modular flooring, and planks

(15) Hybrid power and communications cable listed in accordance 722.100

(2) Uses Not Permitted.

The following cables, wires, cable routing assemblies, and communications raceways shall not be installed in one- and two-family dwellings in locations other than those covered in 722.131(B) through 722.131(F) :

(1) Types BMU and BLU cables

(2) Communications wires

722.132 Permitted Substitutions of Listed Cables Used for Communications Circuits and Communications Wires.

(A) Permitted Substitutions of Listed Communications Cables.

The substitutions for communications cables listed in Table 722.132(A) and illustrated in Figure 722.132(A) shall be permitted.

Table 722.132(A) Listed Communications Cable Substitutions

Cable Type	Permitted Substitutions
CMR	CMP
CMG, CM	CMP, CMR
CMX	CMP, CMR, CMG, CM

Figure 722.132(A) Listed Communications Cable Substitution Hierarchy.

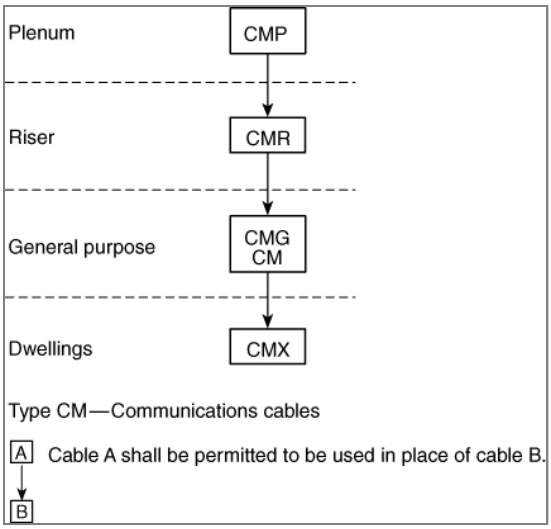

722.133 Installation of Communications Wires and Cables and CATV-Type Coaxial Cables.

Installation of communications wires and cables, from the protector to the equipment, or where no protector is required, communications wires and cables attached to the outside or inside of the building, shall comply with 722.133(A) and 722.133(B) . Installation of CATV-type coaxial cables, beyond the point of grounding as defined in 750.48 , shall comply with 722.133(A) through 722.133(C) .

(A) In Raceways, Cable Trays, Boxes, Cables, Enclosures, and Cable Routing Assemblies.

(1) Other Circuits.

Communications cables and CATV-type coaxial cables shall be permitted in the same raceway, cable tray, box, enclosure, or cable routing assembly together and with jacketed cables of any of the following:

(1) Class 2 and Class 3 remote-control, signaling, and power-limited circuits in compliance with 645.6(E)(2) or Article 725 , Parts I and II

(2) Power-limited fire alarm systems in compliance with Article 760 , Parts I and III

(3) Nonconductive and conductive optical fiber cables in compliance with Article 722 , Parts I and III

(4) Communications circuits in compliance with Article 722 , Parts I and III

(5) Community antenna television and radio distribution systems in compliance with Article 722 , Parts I and III

(6) Low-power network-powered broadband communications circuits in compliance with Article 722 , Parts I and III

(2) Class 2 and Class 3 Circuits.

Class 1 circuits shall not be run in the same cable with communications circuits. Class 2 and Class 3 circuit conductors shall be permitted in the same listed communications cable with communications circuits.

(3) Electric Light, Power, Class 1, Non-Power-Limited Fire Alarm, and Medium-Power Network-Powered Broadband Communications Circuits in Raceways, Compartments, and Boxes.

Communications wires and cables and CATV-type coaxial cables shall not be placed in any raceway, compartment, outlet box, junction box, or similar fitting with conductors of electric light, power, Class 1, non-power-limited fire alarm, or medium-power network-powered broadband communications circuits.

Exception No. 1: Communications wires and cables and CATV-type coaxial cables shall be permitted to be placed in any raceway, compartment, outlet box, junction box, or other enclosures with conductors of electric light, power, Class 1, non-power-limited fire alarm, or medium-power network-powered broadband communications circuits where all of the conductors of electric light, power, Class 1, non-power-limited fire alarm, and medium-power network-powered broadband communications circuits are separated from all of the communications wires and cables and CATV-type coaxial cables by a permanent barrier or listed divider.

Exception No. 2: Communications wires and cables and CATV-type coaxial cables shall be permitted to be placed in outlet boxes, junction boxes, or similar fittings or compartments with power conductors where such conductors are introduced solely for power supply to the communications and coaxial cable system distribution equipment. The power circuit conductors shall be routed within the enclosure to maintain a minimum 6 mm (1/4 in.) separation from the communications wires and cables and the CATV-type coaxial cables.

Exception No. 3: Separation of circuits shall not be required in elevator traveling cables constructed in accordance with by 620.36 .

(B) Other Applications.

Communications wires and cables and CATV-type coaxial cables shall be separated at least 50 mm (2 in.) from conductors of any electric light, power, Class 1, non-power-limited fire alarm, or medium-power network-powered broadband communications circuits.

Exception No. 1: Separation shall not be required where either of the following applies: (1) All of the conductors of electric light, power, Class 1, non-power-limited fire alarm, and medium-power network-powered broadband communications circuits are in a raceway or in metal-sheathed, metal-clad, nonmetallic-sheathed, Type AC, or Type UF cables. (2) All of the communications wires and cables and all of the CATV-type coaxial cables are encased in raceway.

Exception No. 2: Separation shall not be required where the communications wires and cables and CATV-type coaxial cables are permanently separated from the conductors of electric light, power, Class 1, non-power-limited fire alarm, and medium-power network-powered broadband communications circuits by a continuous and firmly fixed nonconductor, such as porcelain tubes or flexible tubing, in addition to the insulation on the wire.

(C) Support of Communications Wires and Cables and CATV-Type Coaxial Cables.

Raceways shall be used for their intended purpose. Communications wires and cables and CATV-type coaxial cables shall not be strapped, taped, or attached by any means to the exterior of any raceway as a means of support.

Exception: Overhead (aerial) spans of communications drop wires, communications cables, and CATV-type coaxial cables shall be permitted to be attached to the exterior of a raceway-type mast intended for the attachment and support of such wires and cables.

(D) Permitted Substitutions of Listed Coaxial Type CATV Cables.

The substitutions for coaxial cables in Table 722.133(D) and illustrated in Figure 722.133(D) shall be permitted.

Informational Note: The substitute cables in Table 722.133(D) and Figure 722.133(D) are only coaxial-type cables.

Table 722.133(D) Permitted Substitutions of Listed Coaxial Type CATV Cables

Cable Type	Permitted Substitutions
CATVP	CMP, BLP
CATVR	CATVP, CMP, CMR, BMR, BLP, BLR
CATV	CATVP, CMP, CATVR, CMR, CMG, CM, BMR, BM, BLP, BLR, BL
CATVX	CATVP, CMP, CATVR, CMR, CATV, CMG, CM, BMR, BM, BLP, BLR, BL, BLX

Figure 722.133(D) Listed Coaxial Type CATV Cables Permitted Substitution Hierarchy.

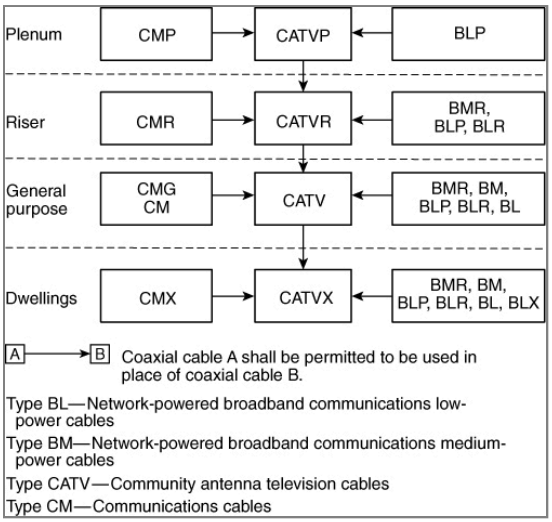

(E) Dwelling Unit Communications Outlet.

For new construction, a minimum of one communications outlet shall be installed with the dwelling in a readily accessible area and cabled to the service provider demarcation point.

722.134 Installation of Network-Powered Broadband Communications Cables and Equipment.

Cable and equipment installations within buildings shall comply with 722.134(A) through 722.134(C), as applicable.

(A) Separation of Conductors.

(1) In Raceways, Cable Trays, Boxes, Enclosures, and Cable Routing Assemblies.

(a) *Low- and Medium-Power Network-Powered Broadband Communications Circuit Cables.* Low- and medium-power network-powered broadband communications cables shall be permitted in the same raceway, cable tray, box, enclosure, or cable routing assembly.

(b) *Low-Power Network-Powered Broadband Communications Circuit Cables with Other Circuits.* Low-power network-powered broadband communications cables shall be permitted in the same raceway, cable tray, box, enclosure, or cable routing assembly with jacketed cables of any of the following circuits:

(3) Class 2 and Class 3 remote-control, signaling, and power-limited circuits in compliance with Article 725 , Parts I and II

(4) Power-limited fire alarm systems in compliance with Article 760 , Parts I and III

(5) Communications circuits in compliance with Article 722 , Parts I and III

(6) Nonconductive and conductive optical fiber cables in compliance with Article 722 , Parts I and III

(7) Community antenna television and radio distribution systems in compliance with Article 722 , Parts I and III

(h) *Medium-Power Network-Powered Broadband Communications Circuit Cables with Optical Fiber Cables and Other Communications Cables.* Medium-power network-powered broadband communications cables shall not be permitted in the same raceway, cable tray, box, enclosure, or cable routing assembly with conductors of any of the following circuits:

(9) Communications circuits in compliance with Article 722 , Parts I and III

(10) Conductive optical fiber cables in compliance with Article 722 , Parts I and III

(11) Community antenna television and radio distribution systems in compliance with Article 722 , Parts I and III

(l) *Medium-Power Network-Powered Broadband Communications Circuit Cables with Other Circuits.* Medium-power network-powered broadband communications cables shall not be permitted in the same raceway, cable tray, box, enclosure, or cable routing assembly with conductors of any of the following circuits:

(13) Class 2 and Class 3 remote-control, signaling, and power-limited circuits in compliance with Article 725 , Parts I and II

(14) Power-limited fire alarm systems in compliance with Article 760 , Parts I and III

(o) *Electric Light, Power, Class 1, Nonpowered Broadband Communications Circuit Cables.* Network-powered broadband communications cable shall not be placed in any raceway, cable tray, compartment, outlet box, junction box, or similar fittings with conductors of electric light, power, Class 1, or non-power-limited fire alarm circuit cables.

Exception No. 1: Network-powered broadband communications cable shall be permitted to be placed in a raceway, cable tray, compartment, outlet box, junction box, or similar fittings with conductors of electric light, power, Class 1, or non-power-limited fire alarm circuit cables where all of the conductors of electric light, power, Class 1, non-power-limited fire alarm circuits are separated from all of the network-powered broadband communications cables by a permanent barrier or listed divider.

Exception No. 2: Where power circuit conductors are installed in in outlet boxes, junction boxes, or similar fittings or compartments where such conductors are introduced solely for power supply to the network-powered broadband communications system distribution equipment, the power circuit conductors shall be routed within the enclosure to maintain a minimum 6 mm (1/4 in.) separation from network-powered broadband communications cables.

(2) Other Applications.

Network-powered broadband communications cable shall be separated at least 50 mm (2 in.) from conductors of any electric light, power, Class 1, and non-power-limited fire alarm circuits.

Exception No. 1: Separation shall not be required where either of the following applies:

(1) All of the conductors of electric light, power, Class 1, and non-power-limited fire alarm circuits are in a raceway or in metal-sheathed, metal-clad, nonmetallic-sheathed, Type AC, or Type UF cables.

(2) All of the network-powered broadband communications cables are encased in a raceway.

Exception No. 2: Separation shall not be required where the network-powered broadband communications cables are permanently separated from the conductors of electric light, power, Class 1, and non-power-limited fire alarm circuits by a continuous and firmly fixed nonconductor, such as porcelain tubes or flexible tubing, in addition to the insulation on the wire.

(B) Support of Network-Powered Broadband Communications Cables.

Raceways shall be used for their intended purpose. Network-powered broadband communications cables shall not be strapped, taped, or attached by any means to the exterior of any conduit or raceway as a means of support.

(C) Splicing of Medium-Powered Network-Powered Communications Cables.

Where a medium-powered network-powered broadband communications cable is spliced or extended, a listed junction box or listed patch panel shall be used.

(D) Bends.

Bends in network broadband cable shall be made so as not to damage the cable. The radius of the curve of the inner edge of any bend shall not be less than 10 times the diameter of the cable.

Informational Note: See ANSI/TIA-568.0-E, *Generic Telecommunications Cabling for Customer Premises* , for information on bend radii of network broadband cable during different types of installation conditions.

722.135 Underground Network-Powered Broadband Communications Cables Entering Buildings.

Underground network-powered broadband communications cables entering buildings shall comply with 722.135(A) and 722.135(B) .

(A) Protection from Physical Damage.

Direct-buried cable, conduit, or other raceways shall be installed to meet the minimum cover requirements of Table 722.135(A) . In addition, direct-buried cables emerging from the ground shall be protected by enclosures, raceways, or other approved means extending from the minimum cover distance required by Table 830.47(A) below grade to a point at least 2.5 m (8 ft) above finished grade. In no case shall the protection be required to exceed 450 mm (18 in.) below finished grade. Types BMU and BLU direct-buried cables emerging from the ground shall be installed in rigid metal conduit (RMC), intermediate metal conduit (IMC), rigid nonmetallic conduit, or other approved means extending from the minimum cover distance required by Table 830.47(A) below grade to the point of entrance.

Exception: Protection from physical damage shall not be required if a low-power network-powered broadband communications circuit is equipped with a listed fault protection device that is located on the network side of the network-powered broadband cable being protected and the device is appropriate to the network-powered broadband communications cable used.

Table 722.135(A) Network-Powered Broadband Communications Systems Minimum Cover Requirements.

Location of Wiring Method or Circuit	Direct Burial Cables	
	mm	in.
All locations not specified below	450	18
Rigid Metal Conduit (RMC) or Intermediate Metal Conduit (IMC)	150	6
In trench below 50 mm (2 in.) thick concrete or equivalent	300 300	12 12
Nonmetallic Raceways Listed for Direct Burial; Without Concrete Encasement or Other Approved Raceways	150	6
Under a building (in raceway only)	150 0	6 0
Under minimum of 100 mm (4 in.) thick concrete exterior slab with no vehicular traffic and the slab extending not less than 150 mm (6 in.) beyond the underground installation	0 300	0 12
One- and two-family dwelling driveways and outdoor parking areas and used only for dwelling-related purposes	100 300	4 12
	300	12
	300	12

Notes:

1. Cover shall be the shortest distance measured between a point on the top surface of any direct-buried cable, conduit, or other raceway and the top surface of finished grade, concrete, or similar cover.

2. Raceways approved for burial only where concrete encased shall require a concrete envelope not less than 50 mm (2 in.) thick.

3. Lesser depths shall be permitted where cables rise for terminations or splices or where access is otherwise required.

4. Where solid rock is encountered, all wiring shall be installed in metal or nonmetallic raceway permitted for direct burial. The raceways shall be covered by a minimum of 50 mm (2 in.) of concrete extending down to rock.

(B) Pools.

Cables located under the pool or within the area extending 1.5 m (5 ft) horizontally from the inside wall of the pool shall meet those clearances and requirements specified in 680.11 .

722.136 Permitted Substitutions of Network-Powered Broadband Communications System Cables.

The substitutions for network-powered broadband system cables listed in Table 722.136 shall be permitted.

Table 722.136 Permitted Substitutions of Network-Powered Broadband Communications System Cables.

Cable Type	Permitted Cable Substitutions
BM	BMR
BLP	CMP, CL3P
BLR	CMP, CL3P, CMR, CL3R, BLP, BMR
BL	CMP, CMR, CM, CMG, CL3P, CL3R, CL3, BMR, BM, BLP, BLR
BLX	CMP, CMR, CM, CMG, CMX, CL3P, CL3R, CL3, CL3X, BMR, BM, BLP, BRP, BL

722.140 Applications, Installations and Wiring Methods for Class 2 or Class 3 Circuits.

(A) General.

Class 2 and Class 3 circuits on the load side of the power source shall be permitted to be installed using wiring methods and materials in accordance with 722.140(A) , 722.140(B) , or a combination of both.

(1) Class 1 Wiring Methods and Materials.

Use of Class 1 wiring methods for Class 2 and Class 3 circuits shall be permitted. Separation from electric light, power, Class 1, non-power-limited fire alarm circuit conductors, and medium-power network-powered broadband communications cables shall comply with 725.136 .

Exception: The ampacity adjustment factors given in 310.15(C)(1) shall not apply.

(2) Class 2 and Class 3 Wiring Methods and Materials.

Conductors on the load side of the power source shall be insulated in accordance with 722.100 and 722.102 and be installed in accordance with 722.110 , 722.140(B) , and 725.136 .

Exception No. 1: As provided for in 620.21 for elevators and similar equipment.

Exception No. 2: Other wiring methods and materials installed in accordance with 725.3 shall be permitted to extend or replace the conductors and cables described in 722.100(A) and permitted by 722.140(A)(2) .

Exception No. 3: Bare Class 2 conductors shall be permitted as part of a listed intrusion protection system where installed in accordance with the listing instructions for the system.

(B) Cables Transmitting Power and Data.

(1) Classification of Circuits.

Circuits carrying data and power shall be classified as electrical power circuits in accordance with the type of electrical power carried.

Exception: PoE circuits shall be classified as communications and Class 2 or Class 3.

(2) Bundling of Cables Transmitting Power and Data.

Sections 722.140(B)(1) and 722.140(B)(2) shall apply to Class 2 and Class 3 circuits that transmit power and data to a powered device over listed cabling. Section 720.30 and Article 725 , Parts I and III shall apply to Class 2 and Class 3 circuits that transmit power and data. The conductors that carry power for the data circuits shall be copper. The current in the power circuit shall not exceed the current limitation of the connectors.

Informational Note No. 1: One example of the use of cables that transmit power and data is the connection of closed-circuit TV cameras (CCTV).

Informational Note No. 2: The 8P8C connector is in widespread use with powered communications systems. IEC 60603-7-2008, Connectors for electronic equipment — Part 7-1: Detail specification for 8-way, unshielded, free and fixed connectors, specifies these connectors to have a current-carrying capacity per contact of 1.0 amperes maximum at 60°C (149°F). See IEC 60603-7 for more information on current-carrying capacity at higher and lower temperatures.

Informational Note No. 3: The requirements of Table 722.140(B)(4) were derived for carrying power and data over 4-pair copper balanced twisted pair cabling. ANSI/TIA 568-C.2-2009, Commercial Building Telecommunications Cabling Standard — Part 2: Balanced Twisted-Pair Telecommunications Cabling and Components, describes this type of cabling.

Informational Note No. 4: See TIA-TSB-184-A-2017, Guidelines for Supporting Power Delivery Over Balanced Twisted-Pair Cabling, for information on installation and management of balanced twisted pair cabling supporting power delivery.

Informational Note No. 5: See ANSI/NEMA C137.3-2017, American National Standard for Lighting Systems — Minimum Requirements for Installation of Energy Efficient Power over Ethernet (PoE) Lighting Systems, for information on installation of cables for PoE lighting systems.

Informational Note No. 6: Rated current for power sources covered in 722.130 is the output current per conductor the power source is designed to deliver to an operational load at normal operating conditions, as declared by the manufacturer. In the design of these systems, the actual current in a given conductor might vary from the rated current per conductor by as much as 20 percent. An increase in current in one conductor is offset by a corresponding decrease in current in one or more conductors of the same cable.

(3) Use of 4-Pair Class 2 or Class 3 Cables to Transmit Power and Data.

Where Type CL3P, Type CL2P, Type CL3R, Type CL2R, Type CL3, or Type CL2 4-pair cables transmit power and data, the rated current per conductor of the power source shall not exceed the ampacities in Table 722.140(B) at an ambient temperature of 30°C (86°F). For ambient temperatures above 30°C (86°F), the correction factors in Table 310.15(B)(1)(1) or in Equation 310.15(B) shall apply.

Exception: Compliance with Table 722.140(B) shall not be required for installations where conductors are 24 AWG or larger and the rated current per conductor of the power source does not exceed 0.3 amperes.

Informational Note: One example of the use of Class 2 cables is a network of closed-circuit TV cameras using 24 AWG, 60°C (140°F) rated, Type CL2R, Category 5e balanced twisted-pair cabling.

(4) Use of Class 2-LP or Class 3-LP Cables to Transmit Power and Data.

Type CL3P-LP, Type CL2P-LP, Type CL3R-LP, Type CL2R-LP, Type CL3-LP, or Type CL2-LP cables shall be permitted to supply power to equipment from a power source with a rated current per conductor up to the marked current limit located immediately following the suffix "-LP" and shall be permitted to transmit data to the equipment. Where the number of bundled LP cables is 192 or less and the selected ampacity of the cables in accordance with Table 722.140(B)(4) exceeds the marked current limit of the cable, the ampacity determined from the table shall be permitted to be used. For ambient temperatures above 30°C (86°F), the correction factors of Table 310.15(B)(1)(1) or Equation 310.15(B) shall apply. The Class 2-LP and Class 3-LP cables shall comply with the following, as applicable:

(1) Cables with the suffix "-LP" shall be permitted to be installed in bundles, raceways, cable trays, communications raceways, and cable routing assemblies.

(2) Cables with the suffix "-LP" and a marked current limit shall follow the substitution hierarchy of 722.122 for the cable type without the suffix "-LP" and without the marked current limit.

(3) System design shall be permitted by qualified persons under engineering supervision.

Informational Note: An example of the marking on a 23 AWG, 4-pair, Class 2 cable rated 75°C (167°F) with an LP current rating of 0.6 amperes per conductor is "CL2-LP(0.6A) 75°C 23 AWG 4-pair". See 722.100(A)(9) .

Table 722.140(B)(4) Ampacities of Each Conductor in Amperes in 4-Pair Class 2 or Class 3 Balanced Twisted-Pair Cables Based on Copper Conductors at an Ambient Temperature of 30°C (86°F) with All Conductors in All Cables Carrying Current, 60°C (140°F), 75°C (167°F), and 90°C (194°F) Rated Cables

AWG	Number of 4-Pair Cables in a Bundle																	
	1–7			8–19			20–37			38–61			62–91			92–192		
	Temperature Rating			Temperature Rating			Temperature Rating			Temperature Rating			Temperature Rating			Temperature Rating		
	60°C	75°C	90°C	60°C	75°C	90°C	60°C	75°C	90°C	60°C	75°C	90°C	60°C	75°C	90°C	60°C	75°C	90°C
26	1	1.23	1.42	0.71	0.87	1.02	0.55	0.68	0.78	0.46	0.57	0.67	0.45	0.55	0.64	NA	NA	NA
24	1.19	1.46	1.69	0.81	1.01	1.17	0.63	0.78	0.91	0.55	0.67	0.78	0.46	0.56	0.65	0.4	0.48	0.55
23	1.24	1.53	1.78	0.89	1.11	1.28	0.77	0.95	1.1	0.66	0.8	0.93	0.58	0.71	0.82	0.45	0.55	0.63
22	1.5	1.86	2.16	1.04	1.28	1.49	0.77	0.95	1.11	0.66	0.82	0.96	0.62	0.77	0.89	0.53	0.63	0.72

Notes:

1. For bundle sizes over 192 cables, or for conductor sizes smaller than 26 AWG, ampacities shall be permitted to be determined by qualified personnel under engineering supervision.

2. Where only half of the conductors in each cable are carrying current, the values in the table shall be permitted to be increased by a factor of 1.4.

Informational Note No. 1: Elevated cable temperatures can reduce a cable's data transmission performance. For information on practices for 4-pair balanced twisted pair cabling, see TIA-TSB-184-A, *Guidelines for Supporting Power Delivery Over Balanced Twisted-Pair Cabling* , and ANSI/TIA-568-C., *Balanced Twisted-Pair Telecommunications Cabling and Components Standard* , 6.4.7, 6.6.3, and Annex G, which provide guidance on adjustments for operating temperatures between 20°C and 60°C (68°F and 140°F).

Informational Note No. 2: The per-contact current rating of connectors can limit the maximum allowable current below the ampacity shown in Table 722.140.

722.150 Applications, Installations, and Wiring Methods for Class 4 Circuit Cables.

(A) Applications.

Class 4 cables shall not be permitted for any application that is not part of a Class 4 system.

Exception: Use of Class 4 cable for other applications shall be permitted if the cable has been listed as suitable for other applications.

(B) Installation in Dwelling Units.

Where Class 4 cables are used in a dwelling unit, 722.150(C) shall apply.

(C) Ampacity.

The ampacity of Class 4 cables shall comply with 720.6(B)(1) based on the temperature rating of the Class 4 cable for conductors sized 16 AWG to 6 AWG. For conductors sized 24 AWG to 17 AWG, the Class 4 cable shall have an ampacity in accordance with the marking FMP-XXA, where XX is the maximum ampacity permitted. In a dwelling unit(s), not more than 20 current- carrying conductors shall be installed without maintaining spacing.

Informational Note No. 1: See 722.100(A)(16) for additional Class 4 cable requirements.

Informational Note No. 2: See UL 1400-1-2022, *Outline of Investigation for Fault-Managed Power Systems — Part 1: General Requirements* , and UL 1400-2-2023, *Outline of Investigation for Fault-Managed Power Systems — Part 2: Requirements for Class 4 Cables* , for information on determining maximum ampacities.

722.160 Applications of Listed Optical Fiber Cables.

Permitted and nonpermitted applications of listed optical fiber cables shall be as indicated in Table 722.160 . The permitted applications shall be subject to the installation requirements of 722.161 and 722.162 . The substitutions for optical fiber cables in Table 722.165 and illustrated in Figure 722.165 shall be permitted.

Table 722.160 Applications of Listed Optical Fiber Cables in Buildings

Applications		Listed Optical Fiber Cable Type		
		OFNP, OFCP	OFNR, OFCR	OFNG, OFCG, OFN, OFC
In ducts specifically fabricated for environmental air as described in 720.22(B).	In fabricated ducts	Y	N	N
	In metal raceway that complies with 720.22(B)	Y	Y	Y
In other spaces used for environmental air (plenums) as described in 720.22(C)	In other spaces used for environmental air	Y	N	N
	In metal raceway that complies with 720.22(C)	Y	Y	Y

	In plenum communications raceways	Y	N	N
	In plenum cable routing assemblies	Y	N	N
	Supported by open metal cable trays	Y	N	N
	Supported by solid bottom metal cable trays with solid metal covers	Y	Y	Y
In risers	In vertical runs	Y	Y	N
	In metal raceways	Y	Y	Y
	In fireproof shafts	Y	Y	Y
	In plenum communications raceways	Y	Y	N
	In plenum cable routing assemblies	Y	Y	N
	In riser communications raceways	Y	Y	N
	In riser cable routing assemblies	Y	Y	N
	In one- and two-family dwellings	Y	Y	Y
Within buildings in other than air-handling spaces and risers	General	Y	Y	Y
	Supported by cable trays	Y	Y	Y
	In distributing frames and cross-connect arrays	Y	Y	Y
	In any raceway recognized in Chapter 3	Y	Y	Y
	In plenum communications raceway	Y	Y	Y
	In plenum cable routing assemblies	Y	Y	Y
	In riser communications raceways	Y	Y	Y
	In riser cable routing assemblies	Y	Y	Y
	In general-purpose communications raceways	Y	Y	Y
	In general-purpose cable routing assemblies	Y	Y	Y

Note: “N” indicates that the cable type shall not be permitted to be installed in the application. “Y” indicates that the cable type shall be permitted to be installed in the application subject to the limitations described in 722.161 and 722.162.

Informational Note No. 1: Article 722 , Part III of covers installation methods within buildings. Table 722.160 covers the applications of listed optical fiber cables in buildings. The definition of *point of entrance* is in Article 100.

Informational Note No. 2: For information on the restrictions to the installation of optical fiber cables in ducts specifically fabricated for environmental air, see 722.161(B) .

722.161 Installation of Optical Fiber Cables.

Installation of optical fiber cables shall comply with 722.161(A) through 722.161(H) . Installation of raceways and cable routing assemblies shall comply with 722.110 .

(A) Ducts Specifically Fabricated for Environmental Air.

Installations of optical fiber cables in ducts specifically fabricated for environmental air shall be in accordance with 722.161(A)(1) and 722.161(A)(2) .

(1) Uses Permitted.

The following cables shall be permitted in ducts specifically fabricated for environmental air as described in 720.22(B) if they are directly associated with the air distribution system:

(1) Up to 1.22 m (4 ft) of Types OFNP and OFCP

(2) Types OFNP, OFCP, OFNR, OFCR, OFNG, OFCG, OFN, and OFC installed in raceways that are installed in compliance with 722.162

Informational Note: See NFPA 90A-2024, *Standard for the Installation of Air-Conditioning and Ventilating Systems* , for information on fire protection of wiring installed in fabricated ducts.

(2) Uses Not Permitted.

Types OFNR, OFCR, OFNG, OFCG, OFN, and OFC shall not be permitted to be installed in ducts specifically fabricated for environmental air as described in 720.22(B) .

Informational Note: See NFPA 90A-2024, *Standard for the Installation of Air-Conditioning and Ventilating Systems* , for information on fire protection of wiring installed in fabricated ducts.

(B) Other Spaces Used for Environmental Air (Plenums).

Installations of optical fiber cables in other spaces used for environmental air shall be in accordance with 722.161(B)(1) and 722.161(B)(2) .

(1) Uses Permitted.

The following cables shall be permitted in other spaces used for environmental air as described in 720.22(C) :

(1) Types OFNP and OFCP

(2) Types OFNP and OFCP installed in plenum communications raceways

(3) Types OFNP and OFCP installed in plenum cable routing assemblies

(4) Types OFNP and OFCP supported by open metal cable tray systems

(5) Types OFNP, OFCP, OFNR, OFCR, OFNG, OFCG, OFN, and OFC installed in raceways that are installed in compliance with 720.22(C)

(6) Types OFNP, OFCP, OFNR, OFCR, OFNG, OFCG, OFN, and OFC supported by solid bottom metal cable trays with solid metal covers in other spaces used for environmental air (plenums), as described in 720.22(C)

(7) Types OFNP, OFCP, OFNR, OFCR, OFNG, OFCG, OFN, and OFC installed in plenum riser and general-purpose communications raceways supported by solid bottom metal cable trays with solid metal covers in other spaces used for environmental air (plenums), as described in 720.22(C)

(2) Risers — Cables in Vertical Runs.

Types OFNR, OFCR, OFNG, OFCG, OFN, and OFC shall not be permitted to be installed in other spaces used for environmental air (plenums).

Informational Note: See NFPA 90A-2024, *Standard for the Installation of Air-Conditioning and Ventilating Systems* , for information on fire protection of wiring installed in other spaces used for environmental air.

(C) Risers — Cables in Vertical Runs.

Installations of optical fiber cables in other spaces used for environmental air shall be in accordance with 722.161(B)(1) and 722.161(B)(2) .

(1) Uses Permitted.

The following cables shall be permitted in vertical runs penetrating one or more floors and in vertical runs in a shaft:

(1) Types OFNP, OFCP, OFNR, and OFCR

(2) Types OFNP, OFCP, OFNR, and OFCR installed in the following:

(3) Plenum communications raceways

(4) Plenum cable routing assemblies

(5) Riser communications raceways

(6) Riser cable routing assemblies

(2) Uses Not Permitted.

Types OFNG, OFCG, OFN, and OFC shall not be permitted to be installed in vertical runs.

Informational Note: See 770.26 for firestop requirements for floor penetrations.

(D) Risers — Cables Permitted in Metal Raceways.

The following cables and innerducts shall be permitted in metal raceways in a riser having firestops at each floor:

(1) Types OFNP, OFCP, OFNR, OFCR, OFNG, OFCG, OFN, and OFC

(2) Types OFNP, OFCP, OFNR, OFCR, OFNG, OFCG, OFN, and OFC installed in the following:

(3) Plenum communications raceways (innerduct)

(4) Riser communications raceways (innerduct)

(5) General-purpose communications raceways (innerduct)

Informational Note: See 770.26 for firestop requirements for floor penetrations.

(E) Risers — Cables Permitted in Fireproof Shafts.

The following cables shall be permitted to be installed in fireproof riser shafts having firestops at each floor:

(1) Types OFNP, OFCP, OFNR, OFCR, OFNG, OFCG, OFN, and OFC

(2) Types OFNP, OFCP, OFNR, OFCR, OFNG, OFCG, OFN, and OFC installed in the following:

(3) Plenum communications raceways

(4) Plenum cable routing assemblies

(5) Riser communications raceways

(6) Riser cable routing assemblies

(7) General-purpose communications raceways

(8) General-purpose cable routing assemblies

Informational Note: See 770.26 for firestop requirements for floor penetrations.

(F) Risers — Cables Permitted in One- and Two-Family Dwellings.

The following cables shall be permitted in one- and two-family dwellings:

(1) Types OFNP, OFCP, OFNR, OFCR, OFNG, OFCG, OFN, and OFC

(2) Types OFNP, OFCP, OFNR, OFCR, OFNG, OFCG, OFN, and OFC installed in the following:

(3) Plenum communications raceways

(4) Plenum cable routing assemblies

(5) Riser communications raceways

(6) Riser cable routing assemblies

(7) General-purpose communications raceways

(8) General-purpose cable routing assemblies

(G) Cable Trays — Cables Permitted.

The following cables shall be permitted to be supported by cable trays:

(1) Types OFNP, OFCP, OFNR, OFCR, OFNG, OFCG, OFN, and OFC

(2) Types OFNP, OFCP, OFNR, OFCR, OFNG, OFCG, OFN, and OFC installed in the following:

(3) Plenum communications raceways

(4) Riser communications raceways

(5) General-purpose communications raceways

(H) Distributing Frames and Cross-Connect Arrays — Cables Permitted.

The following cables shall be permitted to be installed in distributing frames and cross-connect arrays:

(1) Types OFNP, OFCP, OFNR, OFCR, OFNG, OFCG, OFN, and OFC

(2) Types OFNP, OFCP, OFNR, OFCR, OFNG, OFCG, OFN, and OFC installed in the following:

(3) Plenum communications raceways

(4) Plenum cable routing assemblies

(5) Riser communications raceways

(6) Riser cable routing assemblies

(7) General-purpose communications raceways

(8) General-purpose cable routing assemblies

(I) Other Building Locations — Cables Permitted.

The following cables shall be permitted to be installed in building locations other than the locations covered in 722.161(A) through 722.161(G) :

(1) Types OFNP, OFCP, OFNR, OFCR, OFNG, OFCG, OFN, and OFC

(2) Types OFNP, OFCP, OFNR, OFCR, OFNG, OFCG, OFN, and OFC installed in the following:

(3) Plenum communications raceways

(4) Plenum cable routing assemblies

(5) Riser communications raceways

(6) Riser cable routing assemblies

(7) General-purpose communications raceways

(8) General-purpose cable routing assemblies

(9) Types OFNP, OFCP, OFNR, OFCR, OFNG, OFCG, OFN, and OFC installed in a raceway of a type recognized in Chapter 3

722.162 Installation of Optical Fiber Cables in Raceways, Cable Routing Assemblies, and Cable Trays.

(A) Types of Raceways.

Optical fiber cables shall be permitted to be installed in any raceway that complies with either 722.162(A)(1) or 722.162(A)(2) .

(1) Communications Raceways.

Optical fiber cables shall be permitted to be installed in listed communications raceways selected in accordance with Table 722.110(A) .

(2) Other Recognized Raceways.

Optical fiber cables shall be permitted to be installed in raceways recognized by and installed in accordance with Chapter 3 .

(B) Raceway Fill for Optical Fiber Cables.

Raceway fill for optical fiber cables shall comply with either 722.162(B)(1) or 722.162(B)(2) .

(1) Without Electric Light or Power Conductors.

Where optical fiber cables are installed in a raceway without electric light or power conductors, the raceway fill requirements of Chapters 3 and 9 shall not apply.

(2) Nonconductive Optical Fiber Cables with Electric Light or Power Conductors.

Where nonconductive optical fiber cables are installed with electric light or power conductors in a raceway, the raceway fill requirements of Chapters 3 and 9 shall apply.

(C) Cable Routing Assemblies.

Optical fiber cables shall be permitted to be installed in listed cable routing assemblies selected in accordance with Table 722.110(B) .

(D) Cable Trays.

Optical fiber cables shall be permitted to be installed in metal or listed nonmetallic cable tray systems.

722.163 Installation of Optical Fiber Cable in Innerduct.

Listed plenum communications raceways, listed riser communications raceways, and listed general-purpose communications raceways selected in accordance with Table 722.110(A) shall be permitted to be installed as innerduct in any type of listed raceway permitted in Chapter 3 .

722.164 Installation of Optical Fibers and Electrical Conductors.

(A) In Cable Trays and Raceways.

Conductive optical fiber cables contained in an armored or metal-clad-type sheath and nonconductive optical fiber cables shall be permitted to occupy the same cable tray or raceway with conductors for electric light, power, Class 1, non-power-limited fire alarm, Type ITC, or medium-power network-powered broadband communications circuits operating at 1000 volts or less. Conductive optical fiber cables without an armored or metal-clad-type sheath shall not be permitted to occupy the same cable tray or raceway with conductors for electric light, power, Class 1, non-power-limited fire alarm, Type ITC, or medium-power network-powered broadband communications circuits, unless all of the conductors of electric light, power, Class 1, non-power-limited fire alarm, and medium-power network-powered broadband communications circuits are separated from all of the optical fiber cables by a permanent barrier or listed divider.

(B) In Cabinets, Outlet Boxes, and Similar Enclosures.

Nonconductive optical fiber cables shall not be permitted to occupy the same cabinet, outlet box, panel, or similar enclosure housing the electrical terminations of an electric light, power, Class 1, non-power-limited fire alarm, or medium-power network-powered broadband communications circuit unless one or more of the following conditions exist:

(1) The nonconductive optical fiber cables are functionally associated with the electric light, power, Class 1, non-power-limited fire alarm, or medium-power network-powered broadband communications circuit.

(2) The conductors for electric light, power, Class 1, non-power-limited fire alarm, Type ITC, or medium-power network-powered broadband communications circuits operate at 1000 volts or less.

(3) The nonconductive optical fiber cables and the electrical terminations of electric light, power, Class 1, non-power-limited fire alarm, or medium-power network-powered broadband communications circuit are installed in factory- or field-assembled control centers.

(4) The nonconductive optical fiber cables are installed in an industrial establishment where conditions of maintenance and supervision ensure that only qualified persons service the installation.

When optical fibers are within the same hybrid cable for electric light, power, Class 1, non-power-limited fire alarm, or medium-power network-powered broadband communications circuits operating at 1000 volts or less, they shall be permitted to be installed only where the functions of the optical fibers and the electrical conductors are associated.

Optical fibers in hybrid optical fiber cables containing only current-carrying conductors for electric light, power, or Class 1 circuits rated 1000 volts or less shall be permitted to occupy the same cabinet, cable tray, outlet box, panel, raceway, or other termination enclosure with conductors for electric light, power, or Class 1 circuits operating at 1000 volts or less.

Optical fibers in hybrid optical fiber cables containing current-carrying conductors for electric light, power, or Class 1 circuits rated over 1000 volts shall be permitted to occupy the same cabinet, cable tray, outlet box, panel, raceway, or other termination enclosure with conductors for electric light, power, or Class 1 circuits in industrial establishments, where conditions of maintenance and supervision ensure that only qualified persons service the installation.

(C) With Other Circuits.

Conductive and nonconductive optical fiber cables shall be permitted in the same raceway, cable tray, box, enclosure, or cable routing assembly, with conductors of any of the following:

(1) Class 2 and Class 3 remote-control, signaling, and power-limited circuits in compliance with 645.6(E)(2) or Article 725 , Parts I and II

(2) Power-limited fire alarm systems in compliance with Article 760 , Parts I and III

(3) Communications circuits in compliance with Article 805 , Parts I and V

(4) Community antenna television and radio distribution systems in compliance with Article 820 , Parts I and V

(5) Low-power network-powered broadband communications circuits in compliance with Article 830 , Parts I and V

(D) Support of Optical Fiber Cables.

Raceways shall be used for their intended purpose. Optical fiber cables shall not be strapped, taped, or attached by any means to the exterior of any conduit or raceway as a means of support.

Exception: Overhead (aerial) spans of optical fiber cables shall be permitted to be attached to the exterior of a raceway-type mast intended for the attachment and support of such cables.

722.165 Permitted Substitutions of Listed Optical Fiber Cables.

The substitutions for optical fiber cables in Table 722.165 and illustrated in Figure 722.165 shall be permitted.

Table 722.165 Permitted Substitutions of Listed Optical Fiber Cable

Cable Type	Permitted Substitutions
OFNP	None
OFCP	OFNP
OFNR	OFNP
OFCR	OFNP, OFCP, OFNR
OFNG, OFN	OFNP, OFNR
OFCG, OFC	OFNP, OFCP, OFNR, OFCR, OFNG, OFN

Figure 722.165 Cable Substitution Hierarchy.

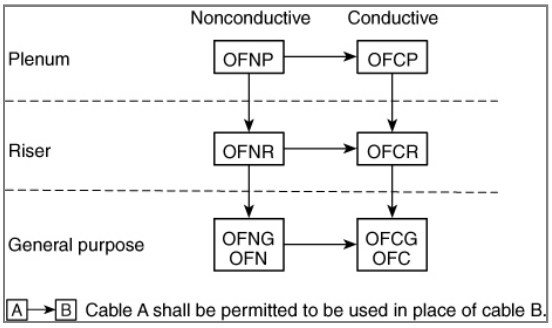

722.166 Overhead (Aerial) Optical Fiber Cables.

Overhead optical fiber cables containing a non-current-carrying metallic member entering buildings shall comply with 722.166(A) and 722.166(B) .

(A) On Poles and In-Span.

Where outside plant optical fiber cables and electric light or power conductors are supported by the same pole or are run parallel to each other in-span, the conditions described in 722.166(A)(1) through 722.166(A)(4) shall be met.

(1) Relative Location.

Where practicable, the outside plant optical fiber cables shall be located below the electric light or power conductors.

(2) Attachment to Cross-Arms.

Attachment of outside plant optical fiber cables to a cross-arm that carries electric light or power conductors shall not be permitted.

(3) Climbing Space.

The climbing space through outside plant optical fiber cables shall comply with the requirements of 225.14(B) .

(4) Clearance.

Supply service drops and sets of overhead service conductors of 0 volts to 750 volts running above and parallel to optical fiber cable service drops shall have a minimum separation of 300 mm (12 in.) at any point in the span, including the point of their attachment to the building. Clearance of not less than 1.0 m (40 in.) shall be maintained between the two services at the pole.

(B) Above Roofs.

Outside plant optical fiber cables shall have a vertical clearance of not less than 2.5 m (8 ft) from all points of roofs above which they pass.

Exception No. 1: The requirement of 770.44(B) shall not apply to auxiliary buildings such as garages and the like.

Exception No. 2: A reduction in clearance above only the overhanging portion of the roof to not less than 450 mm (18 in.) shall be permitted if the following applies:

(1) Not more than 1.2 m (4 ft) of optical fiber cable service drop cable passes above the roof overhang.

(2) The cable is terminated at a through- or above-the-roof raceway or approved support.

Exception No. 3: Where the roof has a slope of not less than 100 mm in 300 mm (4 in. in 12 in.), a reduction in clearance to not less than 900 mm (3 ft) shall be permitted.

Informational Note: See ANSI/IEEE C2-2017, *National Electric Safety Code, Part 2, Safety Rules for Overhead Lines* , for additional information regarding overhead wires and cables.

722.167 Underground Optical Fiber Cables Entering Buildings.

Underground optical fiber cables entering buildings shall comply with 722.167(A) and 722.167(B) .

(A) Underground Systems with Electric Light, Power, Class 1, or Non-Power-Limited Fire Alarm Circuit Conductors.

Underground conductive optical fiber cables entering buildings with electric light, power, Class 1, or non-power-limited fire alarm circuit conductors in a raceway, handhole enclosure, or manhole shall be located in a section separated from such conductors by means of brick, concrete, or tile partitions or by means of a suitable barrier.

(B) Direct-Buried Cables and Raceways.

Direct-buried conductive optical fiber cables shall be separated by at least 300 mm (12 in.) from conductors of any electric light, power, non-power-limited fire alarm circuit conductors, or Class 1 circuit.

Exception No. 1: Separation shall not be required where the electric service conductors are installed in raceways or have metal cable armor.

Exception No. 2: Separation shall not be required where electric light or power branch-circuit or feeder conductors, non-power-limited fire alarm circuit conductors, or Class 1 circuit conductors are installed in a raceway or in metal-sheathed, metal-clad, or Type UF, or Type USE cables.

722.168 Unlisted Optical Fiber Cables Entering Buildings.

(A) Conductive and Nonconductive Cables.

Unlisted conductive and nonconductive outside plant optical fiber cables shall be permitted to be installed in building spaces, other than risers, ducts used for environmental air, plenums used for environmental air, and other spaces used for environmental air, where the length of the cable within the building, measured from its point of entrance, does not exceed 15 m (50 ft) and the cable enters the building from the outside and is terminated in an enclosure. The point of entrance shall be permitted to be extended from the penetration of the external wall, roof, or floor slab by continuously enclosing the entrance optical fiber cables in rigid metal conduit (RMC) or intermediate metal conduit (IMC) to the point of emergence.

Informational Note: Splice cases or terminal boxes, both metallic and plastic types, typically are used as enclosures for splicing or terminating optical fiber cables.

(B) Nonconductive Cables in Raceway.

Unlisted nonconductive outside plant optical fiber cables shall be permitted to enter the building from the outside and shall be permitted to be installed in any of the following raceways:

(1) Intermediate metal conduit (IMC)

(2) Rigid metal conduit (RMC)

(3) Rigid polyvinyl chloride conduit (PVC)

(4) Electrical metallic tubing (EMT)

Unlisted nonconductive outside plant cables installed in rigid polyvinyl chloride conduit (PVC) or electrical metallic tubing (EMT) shall not be installed in risers, ducts used for environmental air, plenums used for environmental air, and other spaces used for environmental air.

722.170 Applications of Listed PLFA Cables.

PLFA cables shall comply with the requirements described in Table 722.170 or where cable substitutions are made as shown in 722.172 . Where substitute cables are installed, the wiring requirements of Article 760 , Parts I and III shall apply. Types FPLP-CI, FPLR-CI, and FPL-CI cables shall be permitted to be installed to provide 2-hour circuit integrity rated cables.

Table 722.170 Applications of Listed PLFA Cables in Buildings

Applications		Cable Type		
		FPLP and FPLP-CI	FPLR and FPLR-CI	FPL and FPL-CI
In fabricated ducts as described in 720.22(B)	In fabricated ducts	Y	N	N
	In metal raceway that complies with 720.22(B)	Y	Y	Y
In other spaces used for environmental air as described in 720.22I	In other spaces used for environmental air	Y	N	N
	In metal raceway that complies with 720.22I	Y	Y	Y
	In plenum communications raceways	Y	N	N
	In plenum cable routing assemblies	Y	N	N
	Supported by open metal cable trays	Y	N	N
	Supported by solid bottom metal cable trays with solid metal covers	Y	Y	Y
In risers	In vertical runs	Y	Y	N
	In metal raceways	Y	Y	Y
	In fireproof shafts	Y	Y	Y
	In plenum communications raceways	Y	Y	N
	In plenum cable routing assemblies	Y	Y	N
	In riser communications raceways	Y	Y	N
	In riser cable routing assemblies	Y	Y	N

	In one- and two-family dwellings	Y	Y	Y
Within buildings in other than air-handling spaces and risers	General	Y	Y	Y

Supported by cable trays	Y	Y	Y

In any raceway recognized in Chapter 3	Y	Y	Y

In plenum communications raceway	Y	Y	Y

In plenum cable routing assemblies	Y	Y	Y

In riser communications raceways	Y	Y	Y

In riser cable routing assemblies	Y	Y	Y

In general-purpose communications raceways	Y	Y	Y

In general-purpose cable routing assemblies	Y	Y	Y

Note:

"N" indicates that the cable type shall not be permitted to be installed in the application. "Y" indicates that the cable type shall be permitted to be installed in the application subject to the limitations described in 760.133 through 760.145.

722.171 Wiring Methods and Materials on Load Side of the PLFA Power Source.

Fire alarm circuits on the load side of the power source shall be permitted to be installed using wiring methods and materials in accordance with 722.171(A) , 722.171(B) , or a combination of both. Article 722 , Parts I and II shall apply.

(A) PLFA Wiring Methods and Materials.

Power-limited fire alarm conductors and cables described in 722.170 shall be installed as detailed in 722.171(B)(1) through 722.171(B)(4), and 722.172 .

(1) In Raceways, Exposed on Ceilings or Sidewalls, or Fished in Concealed Spaces.

Cable splices or terminations shall be made in listed fittings, boxes, enclosures, fire alarm devices, or utilization equipment. Where installed exposed, cables shall be adequately supported and installed such that maximum protection against physical damage is afforded by building construction such as baseboards, door frames, ledges, and so forth. Where located within 2.1 m (7 ft) of the floor, cables shall be securely fastened in an approved manner at intervals of not more than 450 mm (18 in.).

(2) Passing Through a Floor or Wall.

Cables shall be installed in metal raceways or rigid nonmetallic conduit where passing through a floor or wall to a height of 2.1 m (7 ft) above the floor, unless adequate protection can be afforded by building construction such as detailed in 722.171(A)(1) or unless an equivalent solid guard is provided.

(3) Nonconcealed Spaces.

Cables covered by Chapter 3 used for wiring of PLFA circuits and installed in nonconcealed spaces shall comply with the following:

(1) The cables shall be installed in accordance with 722.100(A)(15)(a) and 722.100(A)(15)(b) .

(2) Exposed portions of the cable shall have a length not exceeding 3 m (10 ft).

(4) Portable Fire Alarm Systems.

A portable fire alarm system provided to protect a stage or set when not in use shall be permitted to use wiring methods in accordance with 530.12 .

(5) PLFA Wired Using NPLFA Wiring Methods and Materials.

NPLFA wiring methods shall be permitted when used in accordance with 760.46 , 760.49 , or 760.53 for PLFA circuits. Conductors shall be solid or stranded copper. Separation from electric light, power, Class 1, non-power-limited fire alarm circuit conductors, and medium-power network-powered broadband communications cables shall comply with 760.136 .

(B) Power-Limited Fire Alarm Conductor Size.

Conductors of 26 AWG shall be permitted only where spliced with a connector listed as suitable for 26 AWG to 24 AWG or larger conductors that are terminated on equipment or where the 26 AWG conductors are terminated on equipment listed as suitable for 26 AWG conductors. Single conductors shall not be smaller than 18 AWG.

(C) Support of Conductors.

Power-limited fire alarm circuit conductors shall not be strapped, taped, or attached by any means to the exterior of any conduit or other raceway as a means of support.

722.172 Permitted Substitutions for Power-Limited Fire Alarm Cables.

The substitutions for fire alarm cables listed in Table 722.172 and illustrated in Figure 722.172 shall be permitted. Where substitute cables are installed, the wiring requirements of Article 760 , Parts I and III shall apply.

Informational Note: See 722.100 for information on communications cables (CMP, CMR, CMG, CM).

Table 722.172 Permitted Substitutions for Power-Limited Fire Alarm Cables.

Cable Type	Permitted Substitutions
FPLP	CMP
FPLR	CMP, FPLP, CMR
FPL	CMP, FPLP, CMR, FPLR, CMG, CM

Figure 722.172 Power-Limited Fire Alarm Cable Substitution Hierarchy.

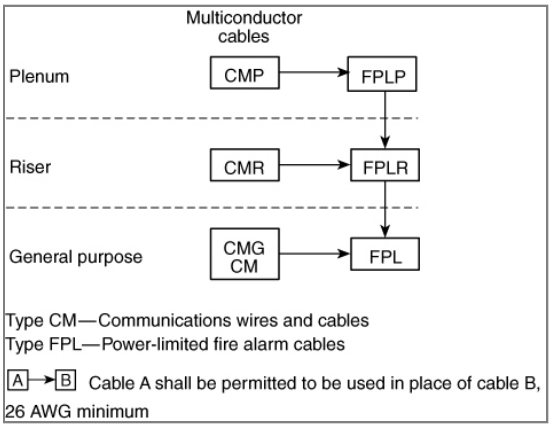

722.180 Circuit Integrity (CI) Cable, Fire-Resistive Cable System, or Electrical Circuit Protective System.

(A) General.

CI cable, a fire-resistive cable system, or a listed electrical circuit protective system shall be permitted for use in systems that supply critical circuits to ensure survivability for continued circuit operation for a specified time under fire conditions.

(B) Securing and Supporting.

Circuit integrity type CI cable shall be supported at 610 mm (24 in.) maximum intervals in accordance with the following:

(1) Secured to the noncombustible surface of the building structure

(2) Using steel supports and fasteners

722.181 Thermocouple Circuits.

Conductors in Type PLTC cables used for Class 2 thermocouple circuits shall be permitted to be any of the materials used for thermocouple extension wire.

722.182 Installation of Circuit Conductors Extending Beyond One Building.

Circuit conductors that extend beyond one building and are run such that they are subject to accidental contact with electric light or power conductors operating over 300 volts to ground, or are exposed to lightning on interbuilding circuits on the same premises, shall comply with the following:

(1) For other than coaxial conductors, 750.48 , 750.100 , 800.44 , 800.50 , 800.53 , 805.170(A) , and 805.170(B)

(2) For coaxial conductors, 750.48(B) , 750.75 , and 800.44

Statement of Problem and Substantiation for Public Comment

The purpose of this PC is to correlate the title of Article 722 with the scope of the NEC in 90.2(C). The NEC covers installations of “optical fiber cables”, not “optical fiber circuits”. The simple solution to this lack of correlation is to shorten the title of Article 722 to “Limited Energy Cables”.

Along with changing the title, this PC recommends a simplification of the Scope of Article 722 in order to improve usability. This PC also adds network-powered broadband communications low-power cables to the scope since they were apparently were overlooked in the first draft.

This Public Comment recommends the revision of the title and scope of Article 722 only. Please ignore the text of the rest of the Article which has been underlined by TerraView.

If the changes recommended by this PC are adopted the title and scope of Article 722 will read as follows:

Article 722 Limited-Energy Cables

Part I. General

722.1 Scope. This article covers the general requirements for the installation of Class 2 and Class 3 power-limited cables, power-limited tray cables, power-limited fire alarm (PLFA) cables, Class 4 fault-managed power cables, optical fiber cables, communications cables, low-power-network-powered communications cables and CATV-type coaxial cables that are not an integral part of a device or utilization equipment installed inside of buildings.

Related Item

• Global FCR-238

Submitter Information Verification

Submitter Full Name: Stanley Kaufman
Organization: CableSafe, Inc./OFS
Affiliation: Plastics Industry Association (PLASTICS)
Street Address:
City:
State:
Zip:
Submittal Date: Wed Jul 10 13:13:13 EDT 2024
Committee: NEC-P03

Public Comment No. 52-NFPA 70-2024 [New Article after 722]

TITLE OF NEW CONTENT

Article 723, new Article after Article 722.

See the attached Word file.

Additional Proposed Changes

File Name	Description	Approved
Article_723_PC_text_07162024.docx	Article 723	

Statement of Problem and Substantiation for Public Comment

The scope of new Article 722 clearly states that the Article covers Limited Energy Cables. Nonetheless, the First Draft includes requirements for the installation of cable routing assemblies and communications raceways. The inclusion of cable routing assemblies and communications raceways occurred because the part of Article 800 covering installation requirements (800.113) was moved into new Article 722. Section 800.113 covers the installation of communications cables as well as the installation of cable routing assemblies and communications raceways.

This purpose of this PC and its companion PCs is to recommend the establishment of new Article 723, which will only cover cable routing assemblies and communications raceways.

If an article covering cable routing assemblies and communications raceways is established, then requirements for covering cable routing assemblies and communications raceways in new Article 722 can be deleted, thereby removing the lack of correlation between the scope and contents of new Article 722.

Simplifying Article 722 will also improve usability.

The recommended text of new Article 723 is in a Word doc attached to this PC.

Related Public Comments for This Document

Related Comment	Relationship
Public Comment No. 59-NFPA 70-2024 [Section No. 722.110]	Delete 722.110
Public Comment No. 61-NFPA 70-2024 [Section No. 722.111]	Delete 722.111
Public Comment No. 59-NFPA 70-2024 [Section No. 722.110]	
Public Comment No. 61-NFPA 70-2024 [Section No. 722.111]	
Public Comment No. 1141-NFPA 70-2024 [Section No. 645.10(B)]	

Related Item

- Global FCR-238

Submitter Information Verification

Submitter Full Name: Stanley Kaufman
Organization: CableSafe, Inc./OFS
Affiliation: Plastics Industry Association (PLASTICS)
Street Address:
City:
State:
Zip:

Submittal Date: Sat Jul 13 12:14:13 EDT 2024
Committee: NEC-P03

ARTICLE 723 Cable Routing Assemblies and Communications Raceways

Part I. General

723.1 Scope. This article covers requirements for the construction and installation of cable routing assemblies and communications raceways.

Informational Note: Cable routing assemblies and communications raceways are designed for supporting and routing limited energy cables.

Part II. Listing

723.2 Listing Requirements

723.2 Cable Routing Assemblies and Communications Raceways. Cable routing assemblies and communications raceways shall be listed in accordance with 723.2(A) through (C). Cable routing assemblies shall be marked in accordance with Table 723.2(a). Communications raceways shall be marked in accordance with Table 723.2(b).

Informational Note: See UL 2024-2014, *Cable Routing Assemblies and Communications Raceways*, for information on listing requirements for both communications raceways and cable routing assemblies.

723.2(A) Plenum Cable Routing Assemblies and Plenum Communications Raceways. Plenum cable routing assemblies and plenum communications raceways shall be listed as having adequate fire-resistant and low-smoke-producing characteristics.

Informational Note No. 1: See ASTM E84-23D, *Standard Test Method for Surface Burning Characteristics of Building Materials*, or UL 723-2018, *Standard Test Method for Surface Burning Characteristics of Building Materials*, for one method of defining cable routing assemblies and communications raceways that have adequate fire-resistant and low-smoke-producing characteristics and exhibit a maximum flame spread index of 25 and a maximum smoke developed index of 50.

Informational Note No. 2: See NFPA 262-2023, *Standard Method of Test for Flame Travel and Smoke of Wires and Cables for Use in Air-Handling Spaces*, for another method of defining communications raceways that have adequate fire-resistant and low-smoke-producing characteristics and exhibit a maximum peak optical density of 0.50 or less, an average optical density of 0.15 or less, and a maximum flame spread distance of 1.52 m (5 ft) or less.

Informational Note No. 3: See NFPA 90A-2024, *Standard for the Installation of Air-Conditioning and Ventilating Systems*, for information on materials exposed to the airflow in ceiling cavity and raised floor plenums.

723.2(B) Riser Cable Routing Assemblies and Riser Communications Raceways. Riser cable routing assemblies and riser communications raceways shall be listed as having adequate fire-resistant characteristics capable of preventing the carrying of fire from floor to floor.

Informational Note: See UL 1666-2007, *Standard Test for Flame Propagation Height of Electrical and Optical-Fiber Cable Installed Vertically in Shafts*, for one method of defining fire-resistant characteristics capable of preventing the carrying of fire from floor to floor of the cable routing assemblies and communications raceways.

723.2(C) General-Purpose Cable Routing Assemblies and General-Purpose Communications Raceways. General-purpose cable routing assemblies and general-purpose communications raceways shall be listed as being resistant to the spread of fire.

Informational Note: See UL 1685-2015, *Standard for Safety for Vertical-Tray Fire-Propagation and Smoke-Release Test for Electrical and Optical-Fiber Cables*, for one method of defining resistance to the spread of fire where the cable routing assemblies and communications raceways do not spread fire to the top of the tray.

Table 723.2(a) Cable Routing Assembly Markings

Type	Marking
Plenum Cable Routing Assembly	Plenum Cable Routing Assembly
Riser Cable Routing Assembly	Riser Cable Routing Assembly
General-Purpose Cable Routing Assembly	General-Purpose Cable Routing Assembly

Table 723.2(b) Communications Raceway Markings

Type	Marking
Plenum Communications Raceway	Plenum Communications Raceway
Riser Communications Raceway	Riser Communications Raceway
General-Purpose Communications Raceway	General-Purpose Communications Raceway

Part III. Applications and Installation Methods

723.10 Applications of Cable Routing Assemblies, and Communications Raceways. Applications of Listed Cable Routing Assemblies shall be selected in accordance with Table 723.10(a). Applications of Listed Communications Raceways shall be selected in accordance with Table 723.10(b).

Table 723.10(a) Applications of Listed Cable Routing Assemblies in Buildings

Applications		Listed Cable Routing Assembly Type		
		Plenum	**Riser**	**General-Purpose**
In ducts specifically fabricated for environmental air as described in 720.22(B)	In fabricated ducts	N	N	N
	In metal raceway that complies with 300.25(B)	N	N	N
	In other spaces used for environmental air	Y	N	N
	In metal raceway that complies with 300.25(C)	N	N	N
In other spaces used for environmental air (plenums) as described in 720.22(C)	In plenum communications raceways	N	N	N
	Supported by open metal cable trays	Y	N	N
	Supported by solid bottom metal cable trays with solid metal covers	N	N	N
In risers	In vertical runs	Y	Y	N
	In metal raceways	N	N	N
	In fireproof shafts	Y	Y	Y
	In plenum communications raceways	N	N	N
	In riser communications raceways	N	N	N
	In one- and two-family dwellings	Y	Y	Y
Within buildings in other than air-handling spaces and risers	General	Y	Y	Y
	In one- and two-family dwellings	Y	Y	Y
	In multifamily dwellings	Y	Y	Y
	In nonconcealed spaces	Y	Y	Y
	Supported by cable trays	Y	Y	Y

Table 723.10(a) Applications of Listed Cable Routing Assemblies in Buildings

Applications		Listed Cable Routing Assembly Type		
		Plenum	Riser	General-Purpose
	Under carpet, modular flooring, and planks	N	N	N
	In distributing frames and cross-connect arrays	Y	Y	Y
	In any raceway recognized in Chapter 3	N	N	N
	In plenum communications raceways	N	N	N
	In riser communications raceways	N	N	N
	In general-purpose communications raceways	N	N	N

Note: An “N” in the table indicates that the cable routing assembly type shall not be installed in the application. A “Y” indicates that the cable routing assembly type shall be permitted to be installed in the application subject to the limitations described in 723.20.

Table 723.10(b) Applications of Listed Communications Raceways in Buildings

Applications		Listed Communications Raceway Type		
		Plenum	Riser	General-Purpose
In ducts specifically fabricated for environmental air as described in 720.22(B)	In fabricated ducts	N	N	N
	In metal raceway that complies with 300.25(B)	N	N	N
In other spaces used for environmental air (plenums) as described in 720.22(C)	In other spaces used for environmental air	Y	N	N
	In metal raceway that complies with 300.25(C)	Y	Y	Y
	In plenum cable routing assemblies	N	N	N
	Supported by open metal cable trays	Y	N	N

Table 723.10(b) Applications of Listed Communications Raceways in Buildings

Applications		Listed Communications Raceway Type		
		Plenum	**Riser**	**General-Purpose**
	Supported by solid bottom metal cable trays with solid metal covers	Y	Y	Y
	In vertical runs	Y	Y	N
	In metal raceways	Y	Y	Y
	In fireproof shafts	Y	Y	Y
In risers	In plenum cable routing assemblies	N	N	N
	In riser cable routing assemblies	N	N	N
	In one- and two-family dwellings	Y	Y	Y
	General	Y	Y	Y
	In one- and two-family dwellings	Y	Y	Y
	In multifamily dwellings	Y	Y	Y
	In nonconcealed spaces	Y	Y	Y
	Supported by cable trays	Y	Y	Y
	Under carpet, modular flooring, and planks	N	N	N
Within buildings in other than air-handling spaces and risers	In distributing frames and cross-connect arrays	Y	Y	Y
	In any raceway recognized in Chapter 3	Y	Y	Y
	In plenum cable routing assemblies	N	N	N
	In riser cable routing assemblies	N	N	N
	In general-purpose cable routing assemblies	N	N	N

Note: An “N” in the table indicates that the communications raceway type shall not be installed in the application. A “Y” indicates that the communications raceway type shall be permitted to be installed in the application, subject to the limitations described in 723.30.

723.20 Installation of Cable Routing Assemblies. Installation of cable routing assemblies shall comply with 723.20(A) through 723.20(C).

(A) Horizontal Support.

Cable routing assemblies shall be supported where run horizontally at intervals not to exceed 900 mm (3 ft) and at each end or joint, unless listed for other support intervals. In no case shall the distance between supports exceed 3 m (10 ft).

(B) Vertical Support.

Vertical runs of cable routing assemblies shall be supported at intervals not exceeding 1.2 m (4 ft), unless listed for other support intervals, and shall not have more than one joint between supports.

(C) Substitutions. Substitutions of listed cable routing assemblies shall be permitted in accordance with Table 723.20 and Figure 723.20.

Table 723.20 Permitted Substitutions of Listed Cable Routing Assemblies

Cable Routing Assembly Type	Permitted Substitutions
Riser cable routing assembly	Plenum cable routing assembly
General purpose cable routing assembly	Plenum cable routing assembly, riser cable routing assembly

Figure 723.20 Permitted Substitutions of Listed Cable Routing Assemblies

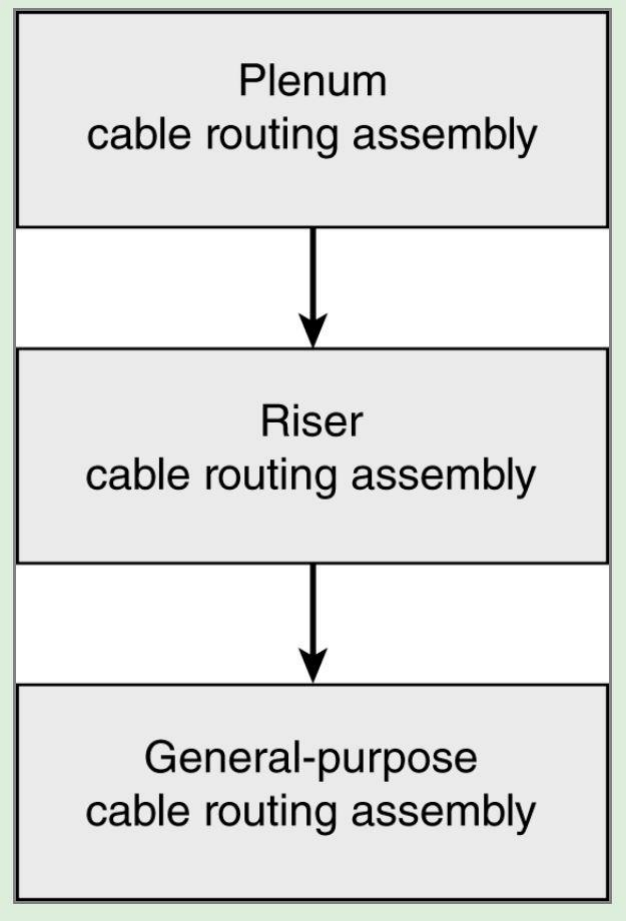

723.30 Installation of Communications Raceways. Listed plenum communications raceways, listed riser communications raceways, and listed general-purpose communications raceways shall installed in accordance with 722.131 and 362.24 through 362.56, where the requirements applicable to electrical nonmetallic tubing (ENT) apply. Permitted substitutions of listed communications raceways shall be permitted in accordance with Table 723.30 and Figure 723.30.

Table 723.30 Permitted Substitutions of Listed Communications Raceways

Communications Raceway Type	Permitted Substitution
Riser communications raceway	Plenum communications raceway
General purpose communications raceway	Plenum communications raceway, riser communications raceway

Figure 723.30 Permitted Substitutions of Listed Communications Raceways

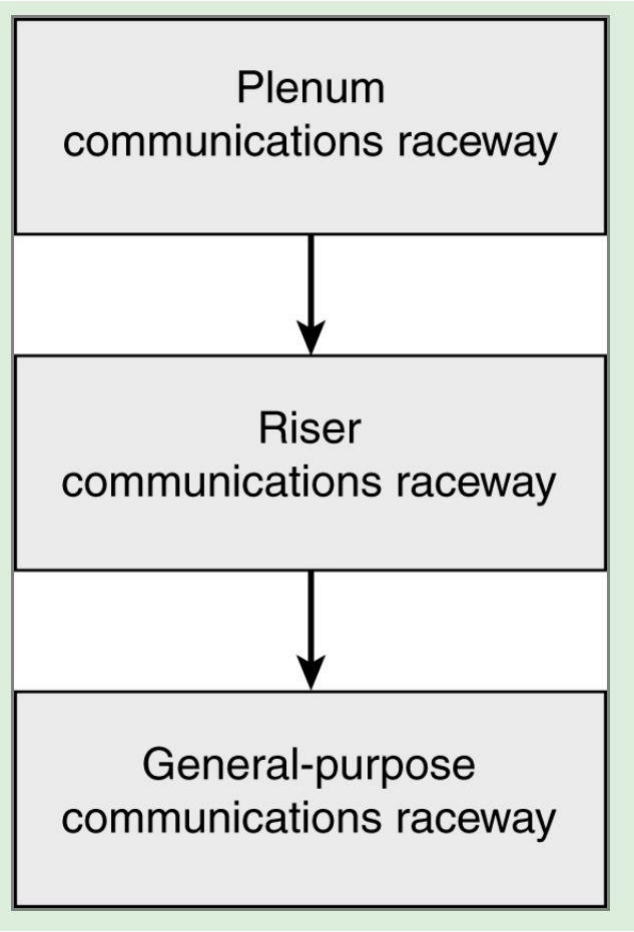

723.31 Innerduct. Listed plenum communications raceways, listed riser communications raceways, and listed general-purpose communications raceways selected in accordance with Table 723.110(b) shall be permitted to be installed as innerduct in any type of listed raceway permitted in Chapter 3.

723.40 Installation of Cable Routing Assemblies, and Communications Raceways in Building Spaces. Installation cable routing assemblies, and communications raceways shall comply with 723.40(A) through (L).

723.40(A) Listing. Cable routing assemblies, and communications raceways installed in buildings shall be listed and installed in accordance with the limitations of the listing.

723.40(B) Ducts Specifically Fabricated for Environmental Air. Cable routing assemblies, and communications raceways shall not be permitted in ducts specifically fabricated for environmental air as described in 720.22(B).

723.40(C) Other Spaces Used for Environmental Air (Plenums).

Installations of cable routing assemblies, and communications raceways in other spaces used for environmental air (plenums) shall be in accordance with 723.40(C)(1) and (C)(2).

723.40(C)(1) Uses Permitted. The following, cable routing assemblies, and communications raceways shall be permitted in other spaces used for environmental air as described in 720.22(C):

(1)

Plenum cable routing assemblies

(2)

Plenum communications raceways

(3)

Plenum, riser, and general-purpose communications raceways supported by solid bottom metal cable trays with solid metal covers

723.40(C)(2) Uses Not Permitted.

The cable routing assemblies, and communications raceways shall not be permitted in other spaces used for environmental air as described in 720.22(C):

(1)

Riser and general-purpose cable routing assemblies

(2)

Riser and general-purpose communications raceways

Informational Note: See NFPA 90A-2024, *Standard for the Installation of Air-Conditioning and Ventilating Systems*, for information on fire protection of wiring installed in other spaces used for environmental air.

723.40(D) Risers — Cables, Cable Routing Assemblies, and Communications Raceways in Vertical Runs. Installations of cable routing assemblies, and communications raceways in risers shall be in accordance with 723.40(D)(1) and (D)(2).

723.40(D)(1) Uses Permitted. The following cables, cable routing assemblies, and communications raceways shall be permitted in vertical runs penetrating one or more floors and in vertical runs in a shaft:

(1)

Plenum and riser cable routing assemblies

(2)

Plenum and riser communications raceways

723.40(D)(2) Uses Not Permitted. The following cable routing assemblies, and communications raceways shall not be permitted in risers:

(1)

General-purpose cable routing assemblies

(2)

General-purpose communications raceways

Informational Note: See 720.21 for firestop requirements for floor penetrations.

723.40(E) Risers — Cables and Innerducts in Metal Raceways. Installations of cable routing assemblies, and communications raceways in metal raceways in a riser having firestops at each floor shall be in accordance with 723.40(E)(1) and (E)(2).

723.40(E)(1) Uses Permitted. The following innerducts shall be permitted in metal raceways in a riser having firestops at each floor:

(1)

Plenum, riser, and general-purpose communications raceways (innerduct)

723.40(E)(2) Uses Not Permitted. The following cable routing assemblies shall not be permitted in metal raceways in a riser having firestops at each floor:

(1)

Plenum, riser, and general-purpose cable routing assemblies

Informational Note: See 720.21 for firestop requirements for floor penetrations.

723.40(F) Risers — Cable Routing Assemblies, and Communications Raceways in Fireproof Shafts. Installations of cable routing assemblies, and communications raceways in fireproof riser shafts having firestops at each floor shall be in accordance with 723.40(F)(1) and (F)(2).

723.40(F)(1) Uses Permitted. The following cable routing assemblies, and communications raceways shall be permitted to be installed in fireproof riser shafts having firestops at each floor:

(1)

Plenum, riser, and general-purpose cable routing assemblies

(2)

Plenum, riser, and general-purpose communications raceways

Informational Note: See 720.21 for firestop requirements for floor penetrations.

723.40(G) Risers — One- and Two-Family Dwellings. Installations of cable routing assemblies, and communications raceways in risers in one- and two-family dwellings shafts shall be in accordance with 723.40(G)(1) and (G)(2).

723.40(G)(1) Uses Permitted. The following cables, cable routing assemblies, and communications raceways shall be permitted in one- and two-family dwellings:

(1)

Plenum, riser, and general-purpose cable routing assemblies

(2)

Plenum, riser, and general-purpose communications raceways

723.40(I) Distributing Frames and Cross-Connect Arrays. Installations of cable routing assemblies, and communications raceways in distributing frames and cross-connect arrays shall be in accordance with 723.40(I)(1) and (I)(2).
723.40(I)(1) Uses Permitted. The following cable routing assemblies, and communications raceways shall be permitted to be installed in distributing frames and cross-connect arrays:

(1)

Plenum, riser, and general-purpose cable routing assemblies

(2)

Plenum, riser, and general-purpose communications raceways

723.40(J) Other Building Locations. Installations of cable routing assemblies, and communications raceways in building locations other than those covered in 723.40(B) through (I) shall be in accordance with 723.40(J)(1) and (J)(2).

723.40(J)(1) Uses Permitted. The following cable routing assemblies, and communications raceways shall be permitted to be installed in building locations other than the locations covered in 723.40(B) through (I):

(1)

Plenum, riser, and general-purpose cable routing assemblies

(2)

Plenum, riser, and general-purpose communications raceways

723.40(K) Multifamily Dwellings. Installations of cable routing assemblies, and communications raceways in multifamily dwellings shall be in accordance with 723.40(K)(1) and (K)(2).

723.40(K)(1) Uses Permitted. The following cables, cable routing assemblies, and communications raceways shall be permitted to be installed in multifamily dwellings in locations other than the locations covered in 723.40(B) through (G):

(1)

Plenum, riser, and general-purpose cable routing assemblies

(2)

Plenum, riser, and general-purpose communications raceways

723.40(L) One- and Two-Family Dwellings. Installations of cable routing assemblies, and communications raceways in one- and two-family dwellings in locations other than those covered in 723.40(B) through (F) shall be in accordance with 723.40(L)(1) and (L)(2).
723.40(L)(1) Uses Permitted.

The following cable routing assemblies, and communications raceways shall be permitted to be installed in one- and two-family dwellings in locations other than the locations covered in 723.40(B) through (F):

(1)

Plenum, riser, and general-purpose cable routing assemblies

(2)

Plenum, riser, and general-purpose communications raceways

Public Comment No. 127-NFPA 70-2024 [New Section after 722.1]

722.2 Listing Requirements

Insert text of new 722.2 from attached word doc.

Additional Proposed Changes

File Name	Description	Approved
new_section_722.2_08182024.docx	text of revised listing section	

Statement of Problem and Substantiation for Public Comment

Section 2.2.1.1 of the 2023 NEC Style Manual requires that listing “listing” be in section xxx.2.

Table 722.102(A) in the FR has been renumbered Table 722.2(B). This table shows all the limited energy cables, enabling the user to determine which cables are covered by Article 722. Table 722.2(B) has a new (left) column which groups the limited energy cables according to the cable type (plenum, riser, etc.) and also shows which cables are suitable for outdoor use and under carpets.

Listing requirements for communications cables that were omitted from the FR have been added to the recommended text.

The requirement for wet location marking was revised to cover Class 2,3 & 4 and power-limited fire alarm cables only, because there are no wet location requirements for communications cable and optical fiber cables. Communications cables and optical fiber cables used outdoors, a wet location, are usually unlisted outside plant cables. The National Electrical Safety Code generally covers outside plant installations.

The voltage rating section was expanded to include communications cables, and low-power, network-powered broadband communications cables.

Related Public Comments for This Document

Related Comment	Relationship
Public Comment No. 160-NFPA 70-2024 [Sections Part II., 722.100, 722.102]	Deletes sections that have been moved.
Public Comment No. 160-NFPA 70-2024 [Sections Part II., 722.100, 722.102]	
Public Comment No. 332-NFPA 70-2024 [Section No. 720.1(A)]	
Public Comment No. 334-NFPA 70-2024 [Section No. 720.4(A)]	
Public Comment No. 336-NFPA 70-2024 [Section No. 720.5(B)]	
Public Comment No. 338-NFPA 70-2024 [Section No. 720.5(D)]	
Public Comment No. 339-NFPA 70-2024 [Section No. 720.5(E)]	
Public Comment No. 340-NFPA 70-2024 [Section No. 720.5(J)]	
Public Comment No. 341-NFPA 70-2024 [Section No. 720.6(A)]	
Public Comment No. 342-NFPA 70-2024 [Section No. 720.6(B) [Excluding any Sub-Sections]]	
Public Comment No. 343-NFPA 70-2024 [Section No. 720.6(B)(1)]	
Public Comment No. 344-NFPA 70-2024 [Section No. 720.6(H)]	
Public Comment No. 345-NFPA 70-2024 [Section No. 720.6(J)]	
Public Comment No. 346-NFPA 70-2024 [Section No. 720.6(K)]	
Public Comment No. 347-NFPA 70-2024 [Section No. 720.7 [Excluding any Sub-Sections]]	
Public Comment No. 348-NFPA 70-2024 [Section No. 720.10]	
Public Comment No. 349-NFPA 70-2024 [Section No. 720.11]	
Public Comment No. 350-NFPA 70-2024 [Section No. 720.14(B)]	
Public Comment No. 351-NFPA 70-2024 [Section No. 720.19(A)]	
Public Comment No. 352-NFPA 70-2024 [Section No. 720.19(B)]	
Public Comment No. 353-NFPA 70-2024 [Section No. 720.21]	
Public Comment No. 354-NFPA 70-2024 [Section No. 720.22 [Excluding any Sub-Sections]]	
Public Comment No. 355-NFPA 70-2024 [Section No. 720.22(A)]	
Public Comment No. 356-NFPA 70-2024 [Section No. 720.22(B)]	
Public Comment No. 357-NFPA 70-2024 [Section No. 720.22(C)(1)]	
Public Comment No. 359-NFPA 70-2024 [Section No. 720.30(A)(2)]	
Public Comment No. 1343-NFPA 70-2024 [Section No. 720.4(B)]	
Public Comment No. 1567-NFPA 70-2024 [Article 722]	

Related Item

- Global FCR-238

Submitter Information Verification

Submitter Full Name: David Kiddoo
Organization: CCCA
Affiliation: Communications Cable & Connectivity Association
Street Address:
City:
State:
Zip:

Submittal Date: Sat Jul 20 07:32:05 EDT 2024

Committee: NEC-P03

722.2 Listing of Limited-Energy Cables. Limited-energy cables installed in buildings shall be listed in accordance with 722.2(A)(1) through 722.2(A)(19) and marked in accordance with 722.2(B).

Exception: Outside plant communications cables, outside plant CATV-type coaxial cables, and outside plant conductive and nonconductive optical fiber cables, installed in compliance with 800.48 shall not be required to be listed.

(A) Listing of Cables. Limited-energy cables installed as wiring methods within buildings shall be listed as resistant to the spread of fire and other criteria in accordance with 722.2(A)(1) through 722.2(A)(16).

Informational Note No. 1: See UL 13-2015, *Power-Limited Circuit Cables*, for applicable requirements for listing of Class 2 and Class 3 cable and power-limited tray cable (PLTC).

Informational Note No. 2: See UL 1424-2015, *Cables for Power-Limited Fire-Alarm Circuits*, for applicable requirements for listing of power-limited fire alarm cable.

Informational Note No. 3: See UL 1651-2015, *Optical Fiber Cable*, for applicable requirements for listing of optical fiber cable.

Informational Note No. 4: See UL 1400-2, *Outline for Fault-Managed Power Systems — Part 2: Requirements for Class 4 Cables*, for applicable requirements for listing of Class 4 cable.

Informational Note No. 5: See UL 444-2017, *Communications Cables*, for applicable requirements for listing of communications cables.

Informational Note No. 6: See UL1655-2009, *Community-Antenna Television Cables*, for applicable requirements for listing of community-antenna television cables.

(1) Plenum Cables. Limited-energy plenum cables identified in Table 722.22(A) shall be listed as suitable for use in ducts, plenums, and other space for environmental air and shall be listed as having adequate fire-resistant and low-smoke producing characteristics.

Informational Note: See NFPA 262-2023, *Standard Method of Test for Flame Travel and Smoke of Wires and Cables for Use in Air-Handling Spaces*, for the test method used to determine that a cable is low-smoke producing and fire resistant, exhibiting a maximum peak optical density of 0.50 or less, an average optical density of 0.15 or less, and a maximum flame spread distance of 1.52 m (5 ft) or less.

(2) Riser Cables. Limited-energy riser cables identified in Table 722.22(A) shall be listed as suitable for use in a vertical run in a shaft or from floor to floor and shall be listed as having fire-resistant characteristics capable of preventing the carrying of fire from floor to floor.

Informational Note: See UL 1666-2007, *Test for Flame Propagation Height of Electrical and Optical-Fiber Cable Installed Vertically in Shafts*, for the cable requirements defining fire-resistant characteristics capable of preventing the carrying of fire from floor to floor.

(3) General-Purpose Cables. Limited-energy general-purpose cables identified in Table 722.22(A) shall be listed as resistant to the spread of fire and as suitable for general-purpose use, except for use in risers, ducts, plenums, and other space used for environmental air.

Informational Note: See UL 2556-2021, *Wire and Cable Test Methods*, for defining *resistant to the spread of fire*. One method is to demonstrate that the cables do not spread fire to the top of the tray in the UL Flame Exposure, Vertical Tray Flame Test. The smoke measurements in the test method are not applicable. A method of defining *resistant to the spread of fire* is for the damage (char length) not to exceed 1.5 m (4 ft 11 in.) when performing the FT4 Vertical Flame Test.

(4) Alternative General-Purpose Cables. Limited-energy alternative general-purpose cables identified in Table 722.22(A) shall be listed as suitable for general-purpose use, with the exception of risers and plenums, and shall also be resistant to the spread of fire.

Informational Note: See CSA C22.2 No. 0.3-M-2001, *Test Methods for Electrical Wires and Cables*, for the CSA Vertical Flame Test — cables in cable trays, that can also be used to define *resistant to the spread of fire* when the damage (char length) does not exceed 1.5 m (4 ft 11 in.).

(5) Limited-Use Cables. Limited-energy limited-use cables identified in Table 722.22(A) shall be listed as suitable for use in dwellings and raceways and shall be listed as resistant to flame spread.

Informational Note: See UL 2556-2021, *Wire and Cable Test Methods*, for one method of determining that cable is resistant to flame spread by testing the cable to the FV-2/VW-1 test.

(6) Network-powered broadband communications low-power cables. Network-powered broadband communications low-power cables shall be factory-assembled cables consisting of a jacketed coaxial cable, a jacketed combination of coaxial cable and multiple individual conductors, or a jacketed combination of an optical fiber cable and multiple individual conductors.

(7) Outdoor Cables.

(a) Type PLTC. Type PLTC nonmetallic-sheathed, power-limited tray cable shall be listed as being suitable for cable trays, resistant to the spread of fire, and sunlight- and moisture-resistant. Type PLTC cable used in a wet location shall be listed for use in wet locations and marked “wet” or “wet location.”

Informational Note: See UL 1685-2015, *Vertical-Tray Fire-Propagation and Smoke-Release Test for Electrical and Optical-Fiber Cables*, for the UL Flame Exposure, Vertical Tray Flame Test that is used to determine resistance to the spread of fire when cables do not spread fire to the top of the tray. The smoke measurements in the test method are not applicable. See CSA C22.2 No. 0.3-M-2001, *Test Methods for Electrical Wires and Cables*, for the CSA Vertical Flame Test — cables in cable trays that can also be used to define *resistant to the spread of fire* when the damage (char length) does not exceed 1.5 m (4 ft 11 in.).

(b) Class 4 outdoor-only use cables. Class 4 outdoor-only cables shall be listed as suitable for use outdoors.

(c) Network-powered broadband communications low-power outdoor cables. Network-powered broadband communications low-power cables intended for outdoor use shall be listed as being suitable for the application.

(d) Network-powered broadband communications low-power underground cables. Network-powered broadband communications low-power underground cables shall be jacketed and listed as being suitable for outdoor underground use.

(8) Undercarpet Cables. Undercarpet communications cables shall be listed as suitable for use under carpet, floor covering, modular tiles, and planks.

Informational Note: See UL 444-2017, *Communications Cables*, for the compressive loading test used to determine the suitability of cable for under-carpet use.

(9) Circuit Integrity (CI) Cable, Fire-Resistive Cable System, or Electrical Circuit Protective System. Cables that are used for survivability of critical circuits under fire conditions shall comply with 722.21(A)(7)(a), 722.21(A)(7)(b), or 722.21(A)(7)(c).

Informational Note: See *NFPA 72*-2025, *National Fire Alarm and Signaling Code*, 12.4.3 and 12.4.4 for additional information on fire alarm CI cable, fire-resistive cable systems, or electrical circuit protective systems used for fire alarm circuits to comply with the survivability requirements to maintain the circuit’s electrical function during fire conditions for a defined period of time.

(a) *CI Cables.* CI cables of the types specified in 722.21(A)(1), 722.21(A)(2), 722.21(A)(3), 722.21(A)(4), and 722.21(A)(6) and used for survivability of critical circuits shall be marked with the additional classification using the suffix “CI.” To maintain its listed fire-resistive rating, CI cable shall only be installed in free air in accordance with 722.180(B). CI cables shall only be permitted to be installed in a raceway where specifically listed and marked as part of a fire-resistive cable system as covered in 722.21(A)(7)(b).

Informational Note: See UL 2196-2017, *Fire Test for Circuit Integrity of Fire-Resistive Power, Instrumentation, Control and Data Cables*, and UL 1425, *Cables for Non–Power-Limited Fire-Alarm Circuits*, for information on establishing a rating for CI cable. The *UL Guide Information for Nonpower-limited Fire Alarm Circuits (HNHT)* contains information to identify the cable and its installation limitations to maintain the fire-resistive rating.

(b) *Fire-Resistive Cables.* Fire-resistive cables of the types specified in 722.21(A)(1), 722.21(A)(2), 722.21(A)(3), 722.21(A)(4), 722.21(A)(6), and 722.21(A)(7)(a) that are part of a fire-resistive cable system shall be identified with the system identifier and hourly rating marked on the protectant or the smallest unit container and installed in accordance with the listing of the system.

Informational Note: See UL 2196-2017, *Fire Test for Circuit Integrity of Fire-Resistive Power, Instrumentation, Control and Data Cables*, for information on establishing a rating for a fire-resistive cable system. The *UL Guide Information for Electrical Circuit Integrity Systems (FHIT)* contains information to identify the system and its installation limitations to maintain a minimum fire-resistive rating.

(c) *Electrical Circuit Protective System.* Protectants for cables of the types specified in 722.21(A)(1), 722.100(A)(2), 722.21(A)(3), 722.21(A)(4), and 722.21(A)(6) that are part of an electrical circuit protective system shall be identified with the protective system identifier and hourly rating marked on the protectant or the smallest unit container and installed in accordance with the listing of the protective system.

Informational Note: See UL 1724-2006, *Fire Tests for Electrical Circuit Protective Systems*, for information on establishing a rating for an electrical circuit protective system. The *UL Guide Information for Electrical Circuit Integrity Systems (FHIT)* contains information to identify the system and its installation limitations to maintain the fire-resistive rating.

(10) Class 3 Single Conductors. Class 3 single conductors used as other wiring within buildings shall be listed Type CL3 and shall not be smaller than 18 AWG.

Informational Note: See UL 1685-2015, *Vertical-Tray Fire-Propagation and Smoke-Release Test for Electrical and Optical-Fiber Cables*, for the UL Flame Exposure, Vertical Tray Flame Test that is used to determine resistance to the spread of fire when cables do not spread fire to the top of the tray. The smoke measurements in the test method are not applicable. See CSA C22.2 No. 0.3-M-2001, *Test Methods for Electrical Wires and Cables*, for the CSA Vertical Flame Test — cables in cable trays that can also be used to define *resistant to the spread of fire* when the damage (char length) does not exceed 1.5 m (4 ft 11 in.).

(11) Limited Power (LP) Cables. Types CL2P-LP, CL2R-LP, CL2-LP, CL3P-LP, CL3R-LP, CL3-LP, CMP-LP, CMR-LP AND CM-LP cables shall be listed as suitable for carrying power and data up to a specified current limit for each conductor without exceeding the temperature rating of the cable. The cables shall be marked with the suffix “-LP (XXA)” where XXA designates the current limit in amperes per conductor.

Informational Note: An example of the marking on 23 AWG, 4-pair, Class 2 cable rated 75°C (167°F) with an LP current rating of 0.6 amperes per conductor is “CL2-LP (0.6A) 75°C 23 AWG 4-pair.”

(12) Wet Locations. Class 2,3 & 4 cables, and power-limited fire alarm cables used in a wet location shall be listed for use in wet locations and be marked “wet” or “wet location” or have a moisture-impervious metal sheath.

(**13) Field-Assembled Optical Fiber Cables.** Field-assembled optical fiber cable shall comply with 722.21(A)(12)(a) through 722.21(A)(12)(d).

(a) The specific combination of jacket and optical fibers intended to be installed as a field-assembled optical fiber cable shall be one of the types in 722.21(A)(1), 722.21(A)(2), or 722.21(A)(3) and shall be marked in accordance with Table 722.21(A).

(b) The jacket of a field-assembled optical fiber cable shall have a surface marking indicating the specific optical fibers with which it is identified for use.

(c) The optical fibers shall have a permanent marking, such as a marker tape, indicating the jacket with which they are identified for use.

(d) The jacket without fibers shall meet the listing requirements for communications raceways in 723.2 in accordance with the cable marking.

(14) Cables Containing Optical Fibers. Hybrid optical fiber cables shall be listed as electrical cables based on the type of electrical conductors.

(15) Temperature Ratings. Limited-energy cables shall have a temperature rating of not less than 60°C (140°F).

(16) Voltage Ratings.
(a) Class 2 cables shall have a voltage rating of not less than 150 volts.
(b) Class 3 cables shall have a voltage rating of not less than 300 volts.

(c) Power-limited fire alarm cables shall have a voltage rating of not less than 300 volts.
(d) *Insulation on conductors in Class 4 cables.* Insulation on conductors in Class 4 cables shall be rated not less than 450 volts dc.
(e) Class 4 cables shall have a voltage rating of not less than 450 volts dc.
(f) Communications cables shall have a voltage rating of not less than 300 volts.
(g) Network-powered broadband communications cables shall have a voltage rating of not less than 300 volts.
(h) Voltage ratings shall not be marked on limited-energy cables.

Exception: Voltage markings shall be permitted where the cable has multiple listings and voltage marking is required for one or more of the listings.

(17) Power-Limited Fire Alarm (PLFA) Cable Conductors. PFLA cables shall comply with 722.21(A)(15)(a) through 722.21(A)(15)(b).

(a) Conductors for cables, other than coaxial cables, shall be solid or stranded copper. Coaxial cables shall be permitted to use 30 percent conductivity copper-covered steel center conductor wire.

(b) The size of conductors in a multiconductor cable shall not be smaller than 26 AWG. Single conductors shall not be smaller than 18 AWG. Conductors of 26 AWG shall be permitted only where spliced with a connector listed as suitable for 26 AWG to 24 AWG or larger conductors that are terminated on equipment or where the 26 AWG conductors are terminated on equipment listed as suitable for 26 AWG conductors.

(18) Class 4 Cable Conductors. Conductors of sizes not smaller than 24 AWG shall be permitted to be used.

(19) Communications cable conductors. Conductors in communications cables, other than coaxial cables, shall be copper.

722.2(B) Marking of Listed Limited-Energy Cables. Limited-energy cables installed in buildings shall be marked in accordance with 722.2(B) and Table 722.2(B); they shall be permitted to be marked in accordance with 722.2(C). Cables shall be durably marked on the surface in accordance with the following:

(1) The AWG size or circular mil area shall be repeated at intervals not exceeding 610 mm (24 in.).

(2) All other markings shall be repeated at intervals not exceeding 1.0 m (40 in.).

(3) The proper type designation for the type of cable shall be marked in accordance with Table 722.2(B).

(4) The manufacturer's name, trademark, or other distinctive marking by which the organization responsible for the product can be readily identified shall be marked.

(5) The AWG size or circular mil area shall be marked.

Informational Note No. 1: See Chapter 9, Table 8 for conductor area expressed in SI units for conductor sizes specified in AWG or circular mil area.

(6) The temperature rating for a temperature rating exceeding 60°C (140°F) shall be marked.

Informational Note No. 2: A minimum temperature rating of 60°C (140°F) is assumed for cables not marked with a temperature rating.

(7) Voltage ratings shall not be marked on the cables.

Exception: Voltage markings shall be permitted where the cable has multiple listings, and a voltage marking is required for one or more of the listings.

Informational Note No. 3: Voltage markings on cables could be misinterpreted to suggest that the cables may be suitable for Class 1 electric light and power applications.

Informational Note No. 4: Cable types are listed in descending order of fire resistance rating.

Table 722.2(B) Limited-Energy Cable Types and Marking

Cable Type	Cable Name	Cable Marking
Plenum Cables	Class 4 plenum cable	CL4P
	Class 3 plenum cable	CL3P
	Class 2 plenum cable	CL2P
	Communications plenum cable	CMP
	CATV community antenna television plenum cable	CATVP
	Network-powered broadband communications low-power cable	BLP
	Nonconductive optical fiber plenum cable	OFNP
	Conductive optical fiber plenum cable	OFCP
	Power-limited fire alarm plenum cable	FPLP
Riser Cables	Class 4 riser cable	CL4R
	Class 3 riser cable	CL3R
	Class 2 riser cable	CL2R
	Communications riser cable	CMR
	CATV community antenna television riser cable	CATVR
	Network-powered broadband communications low-power riser cable	BLR
	Nonconductive optical fiber riser cable	OFNR
	Conductive optical fiber riser cable	OFCR
	Power-limited fire alarm riser cable	FPLR
General-Purpose Cables	Class 4 general-purpose cable	CL4
	Class 3 general-purpose cable	CL3
	Class 2 general-purpose cable	CL2
	Communications general-purpose cable	CM
	CATV community antenna television general-purpose cable	CATV
	Network-powered broadband communications low-power general-purpose cable	BL
	Nonconductive optical fiber general-purpose cable	OFN
	Conductive optical fiber general-purpose cable	OFC
	Power-limited fire alarm general-purpose cable	FPL

Alternative General-Purpose Cables		
	Communications alternative general-purpose cable	CMG
	Nonconductive optical fiber alternative general-purpose cable	OFNG
	Conductive optical fiber alternative general-purpose cable	OFCG
Limited-Use Cables		
	Class 3 limited-use cable	CL3X
	Class 2 limited-use cable	CL2X
	Communications limited-use cable	CMX
	CATV community antenna television limited-use cable	CATVX
	Network-powered broadband communications low-power limited-use cable	BLX
Outdoor Cables	Power-limited tray cable	PLTC
	Class 4 outdoor-only use cable	CL4Z
	Network-powered broadband communications low-power underground cable	BLU
Undercarpet Cables	Undercarpet communications cable	CMUC

Note: All types of electrical cables containing optical fibers are provided with the suffix "-OF."

(C) Optional Markings. Cables shall be permitted to be surface marked to indicate special characteristics of the cable materials.

Informational Note No. 1: Examples of these characteristics include, but are not limited to, limited smoke, halogen free, low smoke and halogen free, and sunlight resistant.

Informational Note No. 2: Some examples of optional markings are ST1 to indicate limited smoke characteristics. See UL 2556, *Wire and Cable Test Methods*, HF to indicate halogen free. See in UL 2885-2021, *Outline of Investigation for Acid Gas, Acidity and Conductivity of Combusted Materials*, and LSHF to indicate halogen free and low-smoke characteristics. See IEC 61034-2, *Measurement of smoke density of cables burning under defined conditions — Part 2: Test procedure and requirements*.

Public Comment No. 924-NFPA 70-2024 [New Section after 722.1]

722.2 Listing of Limited-Energy Cables.

Cables installed for limited-energy and communications systems shall be listed in accordance with the 722.2(A)-(X).

(A) General.

Cables installed as wiring methods within buildings for limited-energy and communications systems shall be:

(1) Listed as resistant to the spread of fire.

(2) Suitable for its application as specified in Part III of Article 722.

(B) Wet Locations.

Limited-energy cables installed in wet locations shall be listed for use in wet locations and be marked "wet" or "wet location" or have a moisture-impervious metal sheath.

Exception No. 1: Optical fiber cables that are installed in compliance with 722.168 shall not be required to be listed.

Exception No. 2: Cables that are installed in compliance with 800.48 shall not be required to be listed.

Exception No. 3 The following limited-energy cable types shall not be required to be listed or marked for wet locations:

(1) Optical fiber cables

(2) Communications cables

(3) Coaxial-Type CATV cables

Informational Note No. 1: See UL 1666-2012, *Test for Flame Propagation Height of Electrical and Optical-Fiber Cable Installed Vertically in Shafts* , for the cable requirements defining fire-resistant characteristics capable of preventing the

carrying of fire from floor to floor.

Informational Note No. 2: See UL 1685-2010, *Standard for Safety for Vertical-Tray Fire-Propagation and Smoke-Release Test for Electrical and Optical-Fiber Cables* , for the UL flame exposure, vertical tray flame test that is used to determine resistance to the spread of fire when cables do not spread fire to the top of the tray. The smoke measurements in the test method are not applicable.

Informational Note No. 3: See UL 2556, *Wire and Cable Test Methods* , for defining *resistant to the spread of fire* . One method is to demonstrate that the cables do not spread fire to the top of the tray in the UL Flame Exposure, Vertical Tray Flame Test. The smoke measurements in the test method are not applicable. A method of defining *resistant to the spread of fire* is for the damage (char length) not to exceed 1.5 m (4 ft 11 in.) when performing the FT4 Vertical Flame Test.

Informational Note No. 4: See NFPA 262-2023, *Standard Method of Test for Flame Travel and Smoke of Wires and Cables for Use in Air-Handling Spaces* , for the test method used to determine that a cable is low-smoke producing and fire resistant, exhibiting a maximum peak optical density of 0.50 or less, an average optical density of 0.15 or less, and a maximum flame spread distance of 1.52 m (5 ft) or less.

Informational Note No. 5: See CSA C22.2 No. 0.3-M-2001, *Test Methods for Electrical Wires and Cables* , for the CSA vertical flame test — cables in cable trays, that can also be used to define resistance to the spread of fire when the damage (char length) does not exceed 1.5 m (4 ft 11 in.).

Additional Proposed Changes

File Name	Description	Approved
Limited_Energy_Roster-2026_2nd_Draft.pdf	Limited-Energy Task Group Roster-2nd Draft	

Statement of Problem and Substantiation for Public Comment

This public comment is submitted on behalf of the Limited-Energy Task Group (see attached task group roster) as the current location of the listing requirements in New Article 722 is in violation of the NEC Style Manual. This PC creates a new section 722.2 to cover the general listing requirements for limited-energy and communications cabling that is compliant with the NEC Style Manual section 2.2.1 for required parallel numbering. 722.2 (A) has been reformatted into list format as it contains more than one requirement, this will comply with the NEC Style Manual section 3.5.1.2.

Related Public Comments for This Document

Related Comment	Relationship
Public Comment No. 925-NFPA 70-2024 [Section No. 722.100 [Excluding any Sub-Sections]]	Deletion of 722.100 and exceptions now covered by new 722.2
Public Comment No. 926-NFPA 70-2024 [Section No. 722.100(A)(2)]	Deletion of info note 722.100(A) as it is now covered in new 722.2
Public Comment No. 927-NFPA 70-2024 [Section No. 722.100(A)(6)]	Deletion of info note in 722.100(A)(6) as it is now covered in new 722.2
Public Comment No. 928-NFPA 70-2024 [Section No. 722.100(A)(8)]	Deletion of info note in 722.100(A)(8) as it is now covered in new 722.2
Public Comment No. 929-NFPA 70-2024 [Section No. 722.100(A)(3)]	Deletion of info note in 722.100(A)(3) as it is now covered in new 722.2
Public Comment No. 930-NFPA 70-2024 [Section No. 722.100(A)(5)]	Deletion of info note in 722.100(A)(5) as it is now covered in new 722.2
Public Comment No. 931-NFPA 70-2024 [Section No. 722.100(A)(1)]	Deletion of info note in 722.100(A)(1) as it is now covered in new 722.2
Public Comment No. 932-NFPA 70-2024 [Section No. 722.100(A)(4)]	Deletion of info note in 722.100(A)(4) as it is now covered in new 722.2
Public Comment No. 933-NFPA 70-2024 [Section No. 722.100(A)(11)]	Deletion of wet location listing and marking requirements as they are now covered by new 722.2(B)
Public Comment No. 934-NFPA 70-2024 [Section No. 722.100(A)(1)]	Deletion of plenum cable listing requirement as it is covered by new 722.2 and 720.22(C).
Public Comment No. 1303-NFPA 70-2024 [Section No. 720.22(C) [Excluding any Sub-Sections]]	Adding informational note refercing NFPA 262 in section 720.22(C) for consistancy
Public Comment No. 925-NFPA 70-2024 [Section No. 722.100 [Excluding any Sub-Sections]]	
Public Comment No. 926-NFPA 70-2024 [Section No. 722.100(A)(2)]	
Public Comment No. 927-NFPA 70-2024 [Section No. 722.100(A)(6)]	

Public Comment No. 928-NFPA 70-2024 [Section No. 722.100(A)(8)]
Public Comment No. 929-NFPA 70-2024 [Section No. 722.100(A)(3)]
Public Comment No. 930-NFPA 70-2024 [Section No. 722.100(A)(5)]
Public Comment No. 931-NFPA 70-2024 [Section No. 722.100(A)(1)]
Public Comment No. 932-NFPA 70-2024 [Section No. 722.100(A)(4)]
Public Comment No. 933-NFPA 70-2024 [Section No. 722.100(A)(11)]
Public Comment No. 934-NFPA 70-2024 [Section No. 722.100(A)(1)]
Public Comment No. 938-NFPA 70-2024 [Section No. 800.50]
Public Comment No. 1303-NFPA 70-2024 [Section No. 720.22(C) [Excluding any Sub-Sections]]
Public Comment No. 1440-NFPA 70-2024 [Section No. 722.100(A)(10)]
Public Comment No. 1498-NFPA 70-2024 [Part II.]

Related Item

- FCR-238

Submitter Information Verification

Submitter Full Name: Kyle Krueger
Organization: NECA
Affiliation: NECA
Street Address:
City:
State:
Zip:

Submittal Date: Wed Aug 07 16:56:53 EDT 2024
Committee: NEC-P03

Limited Energy Task Group [2nd Draft]					
No.	First Name	Last Name	Class.	Organization	Other Committees
1	Kyle	Krueger	[I/M]	NECA	NEC-Correlating Comittee CMP 3 NFPA 72-Correlating Committee
2	Ernie	Gallo	[U/T]	NEBScore	
3	Derrick	Atkins	[L]	Minneapolis Electrical JA	NEC-Correlating Committee CMP 5
4	Anthony	Tassone	[R/T]	UL Solutions	CMP 3 CMP 16
5	Chad	Jones	[M]	Cisco	CMP 3
6	Sam	Rokowski	[I/M]	Maddox Inc.	CMP 3
7	George	Bish	[M]	Amazon/Ring Protect Inc	CMP 16
8	Trevor	Bowmer	[U]	Telecom Consulting	NEC Correlating Committee CMP 16
9	Ronald	Tellas	[M]	CCCA	CMP 3 CMP 16
10	Tim	Mikloiche	[E]	IAEI	CMP 3
11	Ryan	Jackosn	[M]	Steel Tube Industry	CMP 3
12	Diana	Lettkeman	[M]	Dish	CMP 16
13	John	Kacperski	[L]	IBEW	CMP 16

Public Comment No. 1316-NFPA 70-2024 [Section No. 722.1]

722.1 Scope.

This article covers the general requirements for the installation of ~~single- and multiple-conductor cables used in Class 2 and Class 3 power-~~ limited ~~circuits, power-limited fire alarm (PLFA) circuits, Class 4 fault-managed power circuits, optical fiber cables, and communications systems power-limited, remote-control, and signaling circuits that are not an integral part of a device or utilization equipment installed inside of buildings. These general requirements also cover cables used in communications systems and apply to communications circuits, data communications, community antenna television and radio distribution systems, network-powered broadband communications systems, and premises-powered broadband communications systems, unless modified by applicable parts of Articles~~ ~~800~~ ~~, 810,~~ ~~820~~ ~~,~~ ~~830~~ ~~, or~~ ~~840~~ -energy cables.

Informational Note No. 1: See figure Informational Note No.1 for arrangment of this article .

Informational Note No. ~~1~~ 2 : See 206.4 for classifications of remote-control and signaling circuits.

Informational Note No. ~~2~~ 3 : Class 4 fault-managed power systems consist of a Class 4 power transmitter and a Class 4 power receiver connected by a Class 4 cabling system. These systems are characterized by monitoring the circuit for faults and controlling the source current to ensure the energy delivered into any fault is limited. Class 4 systems differ from Class 1, Class 2, and Class 3 systems in that they are not limited for power delivered to an appropriate load. They are current limited for faults between the Class 4 transmitter and Class 4 receiver.

Informational Note No. ~~3~~ 4 : The circuits described herein are characterized by usage and electrical power limitations that differentiate them from electric light and power circuits; therefore, alternative requirements are given regarding minimum wire sizes, ampacity adjustment and correction factors, overcurrent protection, installation requirements, and wiring methods and materials.

Figure 722.1 Informational Note No.1 Arrangement of This Article.

General, 722.1 through 722 .30	Part I.
Marking Requirements , 722.100	Part II.
Limited-Energy Cables and Wiring Methods , . 722.120 through 722.122	Part I II .
Communications Cables and Wiring Methods, 722.130 through 722.13 5	Part . I V.
Class 2 or Class 3 Cables and Wiring Methods, 722.140	Part V.
Class 4 Cables and Wiring Methods, 722.150 through 722.152	P art VI.
Optical Fiber Cables and Wiring Methods, 722.160 through 722.168	P art VII.
P ower-Limit ed Fire Alarm (PLFA) Cables and Wiring Methods, 722.170 through 722.172	Part VIII .
Circuit Integrity Cables (Type CI), Fire-Resistive Cable Systems, and Electrical Circuit Protective Systems , 722.180 through 722.182	Part I X.

Additional Proposed Changes

File Name	Description	Approved
Limited_Energy_Roster-2026_2nd_Draft.pdf	Limited-Energy Task Group Roster-2nd Draft	

Statement of Problem and Substantiation for Public Comment

This public comment is submitted on behalf of the Limited-Energy Task Group (see attached roster) to modify the scope of Article 722 to include the term limited-energy cables as this not only simplifies the scope but makes the coverage of Article 722 more inclusive with the new definition of limited-energy cables also proposed as PC by this Task Group. Additionally, this PC adds a new Informational Note No.1 to section 722.1 referencing a new figure showing the arrangement of Article 722. This Task Group has submitted a companion PC that creates these new parts. Like other large articles like 230, 250 and 430, adding a note and figure showing the arrangement will enhance usability especially during the reorganization transition.
See PC-1314 - creating the new Parts of Article 722 and PC-1371 creating the new definition of Limited-Energy Cables.

Related Public Comments for This Document

Related Comment	Relationship
Public Comment No. 1314-NFPA 70-2024 [Article 722]	Break Article 722 into Parts I-IX
Public Comment No. 1371-NFPA 70-2024 [New Definition after Definition: Cable Joint.]	PC creating a definition for Limited-Energy Cables.
Public Comment No. 1314-NFPA 70-2024 [Article 722]	

Related Item

- FCr-238

Submitter Information Verification

Submitter Full Name: Kyle Krueger
Organization: NECA
Affiliation: NECA
Street Address:
City:
State:
Zip:

Submittal Date: Tue Aug 20 14:03:35 EDT 2024
Committee: NEC-P03

Limited Energy Task Group [2nd Draft]					
No.	First Name	Last Name	Class.	Organization	Other Committees
1	Kyle	Krueger	[I/M]	NECA	NEC-Correlating Comittee CMP 3 NFPA 72-Correlating Committee
2	Ernie	Gallo	[U/T]	NEBScore	
3	Derrick	Atkins	[L]	Minneapolis Electrical JA	NEC-Correlating Committee CMP 5
4	Anthony	Tassone	[R/T]	UL Solutions	CMP 3 CMP 16
5	Chad	Jones	[M]	Cisco	CMP 3
6	Sam	Rokowski	[I/M]	Maddox Inc.	CMP 3
7	George	Bish	[M]	Amazon/Ring Protect Inc	CMP 16
8	Trevor	Bowmer	[U]	Telecom Consulting	NEC Correlating Committee CMP 16
9	Ronald	Tellas	[M]	CCCA	CMP 3 CMP 16
10	Tim	Mikloiche	[E]	IAEI	CMP 3
11	Ryan	Jackosn	[M]	Steel Tube Industry	CMP 3
12	Diana	Lettkeman	[M]	Dish	CMP 16
13	John	Kacperski	[L]	IBEW	CMP 16

Public Comment No. 1366-NFPA 70-2024 [Section No. 722.4]

~~**722.4** Other Articles.~~

~~In addition to the requirements of this article, installations of limited-energy and communications wires and cables shall also comply with the following:~~

(1) ~~Class 2 and Class 3 cables: Article 725 , Part II and Article 722 , Parts I and II~~

(2) ~~Class 4 cables: Article 726 , Part II and IV and Article 722 , Parts I and II~~

(3) ~~Fire alarm cables: Article 760 , Part III~~

(4) ~~Optical fiber cables: Article 770 , Part V~~

(5) ~~Coaxial cables — installations of premises (within buildings) CATV and radio distribution circuits: Article 820 , Part V~~

Additional Proposed Changes

File Name	Description	Approved
Limited_Energy_Roster-2026_2nd_Draft.pdf	Limited-Energy Task Group Roster-2nd Draft	

Statement of Problem and Substantiation for Public Comment

This public comment is submitted on behalf of the Limited-Energy Task Group (see attached roster) to delete section 722.4 as these references are incorrect and/or circular with the reorganization. Additionally, there is a table in 720.4 that identifies all of the limited energy scopes for easy identification of other articles that contain limited-energy system requirements.

Related Item

- FCR-238

Submitter Information Verification

Submitter Full Name: Kyle Krueger
Organization: NECA
Affiliation: NECA
Street Address:
City:
State:
Zip:

Submittal Date: Wed Aug 21 15:11:29 EDT 2024
Committee: NEC-P03

Limited Energy Task Group [2nd Draft]					
No.	First Name	Last Name	Class.	Organization	Other Committees
1	Kyle	Krueger	[I/M]	NECA	NEC-Correlating Comittee CMP 3 NFPA 72-Correlating Committee
2	Ernie	Gallo	[U/T]	NEBScore	
3	Derrick	Atkins	[L]	Minneapolis Electrical JA	NEC-Correlating Committee CMP 5
4	Anthony	Tassone	[R/T]	UL Solutions	CMP 3 CMP 16
5	Chad	Jones	[M]	Cisco	CMP 3
6	Sam	Rokowski	[I/M]	Maddox Inc.	CMP 3
7	George	Bish	[M]	Amazon/Ring Protect Inc	CMP 16
8	Trevor	Bowmer	[U]	Telecom Consulting	NEC Correlating Committee CMP 16
9	Ronald	Tellas	[M]	CCCA	CMP 3 CMP 16
10	Tim	Mikloiche	[E]	IAEI	CMP 3
11	Ryan	Jackosn	[M]	Steel Tube Industry	CMP 3
12	Diana	Lettkeman	[M]	Dish	CMP 16
13	John	Kacperski	[L]	IBEW	CMP 16

Public Comment No. 192-NFPA 70-2024 [Section No. 722.4]

722.4 Other Articles.

(A) In addition to the requirements of this article, installations of limited-energy ~~and communications wires and~~ cables shall also comply with the following:

(1) Article 720, Part II

(2) Class 2 and Class 3 cables: Article 725, Part II ~~and Article 722, Parts I and II~~

(3) Class 4 cables: Article 726, Part II and IV ~~and Article 722, Parts I and II~~

(4) Power-Limited Fire alarm cables: Article 760, Part III

(5) ~~Optical~~ Communications cables, optical fiber cables and CATV-type coaxial cables used in communications circuits : Article ~~770~~ 800 , Part ~~V~~

(6) ~~Coaxial cables — installations of premises (within buildings) CATV and radio distribution circuits: Article 820, Part V~~

(7) II

(8) Network-powered broadband communications low-power cables: Article 830, Part V

(B) Installations of communications cables, optical fiber cables and CATV-type coaxial cables shall not be required to comply with:

(1) Wet location requirements in 110.11

(2) Working space requirements in 110.26

(3) Guarding of live parts in 110.27

(4) Identification of grounding conductors in 250.119

Statement of Problem and Substantiation for Public Comment

The recommended text for 722.4, Other Articles has multiple purposes:

1. Eliminate circular references to this Article.
2. Include new references to new Article 720, General Requirements for limited-Energy system Wiring Methods and Materials.
3. Correct references to parts of Articles that have been deleted in the First Draft.
4. Provide exceptions for inappropriate installation requirements including working space requirements, guarding requirements and grounding of green wire requirements and wet locations for cables used in communications.

Related Public Comments for This Document

Related Comment	Relationship
Public Comment No. 1567-NFPA 70-2024 [Article 722]	

Related Item

• Global FCR-238

Submitter Information Verification

Submitter Full Name: David Kiddoo
Organization: CCCA
Affiliation: Communications Cable & Connectivity Association
Street Address:
City:
State:
Zip:

Submittal Date: Wed Jul 24 05:57:48 EDT 2024
Committee: NEC-P03

Public Comment No. 903-NFPA 70-2024 [Section No. 722.4]

722.4 Other ~~Articles~~ Requirements .

In addition to the requirements of this article, installations of limited-energy and communications wires and cables shall also comply with the following:

(1) Class 2 and Class 3 cables: Article 725, Part II~~ and Article 722 , Parts I and II~~

(2) Class 4 cables: Article 726, Part II and ~~IV and Article 722 , Parts I and II~~ IV

(3) Fire alarm cables: Article 760, Part III

(4) Optical fiber cables: Article 770, Part V

(5) Coaxial cables — installations of premises (within buildings) CATV and radio distribution circuits: Article 820, Part V

Statement of Problem and Substantiation for Public Comment

According to the Style Manual, this section needs to be titled "Other Requirements" and the list needs to be a table.
I marked for deletion the references to Article 722 because they aren't "other" articles, they are "this" article.

Related Item

• FCR 238

Submitter Information Verification

Submitter Full Name: Ryan Jackson
Organization: Self-employed
Street Address:
City:
State:
Zip:

Submittal Date: Wed Aug 07 13:48:33 EDT 2024
Committee: NEC-P03

Public Comment No. 1684-NFPA 70-2024 [New Section after 722.12]

722.1 3 Separations from Electric Light, Power, Class 1, Non-Power-Limited Fire Alarm Circuit Conductors, and Medium Power Network-Powered Broadband Communications Cables.

(A) General.

Unless prohibited by Article 723, Part II, III or IV, the limited-energy cable types in Table 722.13(A) shall be permitted to be installed in accordance with 722.13(B) through 722.13(H).

Table 722.13(A) Limited-Energy Cable Types.

Plenum Limited-Energy Cables	CMP	Communications Plenum Cables
	CATVP	Community Antenna Television Plenum Cables
	BLP	Network-Powered Broadband Communications Low-Power Plenum Cables
	FPLP	Power-Limited Fire Alarm Plenum Cables
	CL4P	Class 4 Plenum Cables
	CL3P	Class 3 Plenum Cables
	CL2P	Class 2 Plenum Cables
	OFNP	Nonconductive Optical Fiber Plenum Cables
	OFCP	Conductive Optical Fiber Plenum Cables
Riser Limited-Energy Cables	CMR	Communications Riser Cables
	CATVR	Community Antenna Television Riser Cables
	BLR	Network-Powered Broadband Communications Low-Power Riser Cables
	FPLR	Power-Limited Fire Alarm Riser Cables
	CL4R	Class 4 Riser Cables
	CL3R	Class 3 Riser Cables
	CL2R	Class 2 Riser Cables
	OFNR	Nonconductive Optical Fiber Riser Cables
	OFCR	Conductive Optical Fiber Riser Cables
General-Purpose Limited-Energy Cables	CMG, CM	Communications General-Purpose Cables
	CATV	Community Antenna Television General-Purpose Cables
	BL	Network-Powered Broadband Communications Low-Power General-Purpose Cables
	FPL	Power-Limited Fire Alarm General-Purpose Cables
	CL4	Class 4 General-Purpose Cables
	PLTC	Power-Limited Tray Cables
	CL3	Class 3 General-Purpose Cables
	CL2	Class 2 General-Purpose Cables
	OFNG, OFN	Nonconductive Optical Fiber General-Purpose Cables
	OFCG, OFC	Conductive Optical Fiber General-Purpose Cables
Limited-Use Limited-Energy Cables	CMX	Communications Limited Use Cables
	CATVX	Community Antenna Television Limited Use Cables
	BLX	Network-Powered Broadband Communications Low-Power Limited Use Cables
	CL3X	Class 3 Limited Use Cables
	CL2X	Class 2 Limited Use Cables
Specialty Use Limited-Energy Cables	CMUC	Under-Carpet Communications Wires and Cables

(B) Two or More Class 2, Class 3, or Class 4 Circuits.

Conductors of two or more limited energy circuits of the same class shall be permitted within the same limited energy cable.

(C) Class 2, Class 3, and Class 4 Circuits with the Same Limited Energy Cable.

(1) **Class 3 Cables.**

Class 2 circuits shall be permitted to use listed Class 3 cables.

(1) **Dual-Listed Class 3/Class 4 Cables.**

Class 2 and Class 3 circuits shall be permitted to use dual-listed Class 3/Class 4 cables.

(D) Class 2 and Class 3 Circuits with Communications Circuits.

(1) **Communications Cables.**

Conductors of one or more Class 2 or Class 3 circuits shall be permitted in the same cable with conductors of communications circuits. The cable shall be listed as a communications cable.

(1) **Composite Limited-Energy Cables.**

Cables constructed of individually listed Class 2, Class 3, and communications cables under a common jacket shall be permitted to be classified and listed as communications cables. The fire resistance rating of the composite cable shall be determined by the combustion characteristics of the composite cable.

(E) Class 2, Class 3, or Class 4 Cables with Other Limited Energy Cables. [KK1]

(1) **Limited-Use Cables.**

Plenum, riser, general-purpose, and limited use limited-energy cables shall be permitted in the same enclosure or raceway.

(1) **Other Than Limited-Use Cables.**

Plenum, Riser, and General-Purpose Limited Energy Cables shall be permitted in the same enclosure, cable tray, raceway, or cable routing assembly.

(F) Power-Limited Fire Alarm Circuits.

Power-limited fire alarm circuits shall comply with 760.136.

(G) Manholes.

Outside plant communications, CATV, and optical fiber cables shall be permitted to be installed together in manholes.

Informational Note: See Rules 323 and 341 of IEEE C2-2023, National Electrical Safety Code for information on cable installation in manholes.

(H) Limited-Use and Under-Carpet Limited-Energy Cables.

Limited-use and under-carpet limited-energy cables shall not be installed in cable trays or cable routing assemblies.

Additional Proposed Changes

File Name	Description	Approved
Limited_Energy_Roster-2026_2nd_Draft.pdf	Limited-Energy Task Group Roster-2nd Draft	

Statement of Problem and Substantiation for Public Comment

This public comment is submitted on behalf of the Limited-Energy Task Group (see attached roster) to create a new section 722.13 for general cable separate requirements that apply to all limited-energy cables. This language was relocated from 722.112.
See companion PC-1309.

Related Public Comments for This Document

Related Comment	Relationship
Public Comment No. 1309-NFPA 70-2024 [Section No. 722.112]	PC to delete section 722.112 as it is relocated to new section 722.13.
Public Comment No. 1309-NFPA 70-2024 [Section No. 722.112]	
Public Comment No. 1694-NFPA 70-2024 [Section No. 725.136]	
Public Comment No. 1699-NFPA 70-2024 [Section No. 726.136]	

Related Item

- FCR-238

Submitter Information Verification

Submitter Full Name: Kyle Krueger
Organization: NECA
Affiliation: NECA
Street Address:
City:
State:
Zip:

Submittal Date: Mon Aug 26 11:33:25 EDT 2024
Committee: NEC-P03

Limited Energy Task Group [2nd Draft]					
No.	First Name	Last Name	Class.	Organization	Other Committees
1	Kyle	Krueger	[I/M]	NECA	NEC-Correlating Comittee CMP 3 NFPA 72-Correlating Committee
2	Ernie	Gallo	[U/T]	NEBScore	
3	Derrick	Atkins	[L]	Minneapolis Electrical JA	NEC-Correlating Committee CMP 5
4	Anthony	Tassone	[R/T]	UL Solutions	CMP 3 CMP 16
5	Chad	Jones	[M]	Cisco	CMP 3
6	Sam	Rokowski	[I/M]	Maddox Inc.	CMP 3
7	George	Bish	[M]	Amazon/Ring Protect Inc	CMP 16
8	Trevor	Bowmer	[U]	Telecom Consulting	NEC Correlating Committee CMP 16
9	Ronald	Tellas	[M]	CCCA	CMP 3 CMP 16
10	Tim	Mikloiche	[E]	IAEI	CMP 3
11	Ryan	Jackosn	[M]	Steel Tube Industry	CMP 3
12	Diana	Lettkeman	[M]	Dish	CMP 16
13	John	Kacperski	[L]	IBEW	CMP 16

Public Comment No. 1487-NFPA 70-2024 [Section No. 722.12]

~~**722.12** Uses Not Permitted.~~

~~Class 4 cables shall not be permitted for any applications that are not part of a Class 4 system.~~

~~*Exception: Use of Class 4 cable for other applications shall be permitted if the cable has been listed as suitable for the other applications.*~~

Additional Proposed Changes

File Name	Description	Approved
Limited_Energy_Roster-2026_2nd_Draft.pdf	Limited-Energy Task Group Roster-2nd Draft	

Statement of Problem and Substantiation for Public Comment

This public comment is submitted on behalf of the Limited-Energy Task Group (see attached roster) to delete Section 722.12 and Exception as this requirement has been relocated to the more appropriate location in section 722.150 with the other class 4 cable requirements during the 1st draft. A companion PC has also been submitted to revise section 722.150 into positive code text.

Related Public Comments for This Document

Related Comment	Relationship
Public Comment No. 1491-NFPA 70-2024 [Section No. 722.150]	

Related Item

- FCR-238

Submitter Information Verification

Submitter Full Name: Kyle Krueger
Organization: NECA
Affiliation: NECA
Street Address:
City:
State:
Zip:

Submittal Date: Fri Aug 23 14:56:05 EDT 2024
Committee: NEC-P03

Limited Energy Task Group [2nd Draft]					
No.	First Name	Last Name	Class.	Organization	Other Committees
1	Kyle	Krueger	[I/M]	NECA	NEC-Correlating Comittee CMP 3 NFPA 72-Correlating Committee
2	Ernie	Gallo	[U/T]	NEBScore	
3	Derrick	Atkins	[L]	Minneapolis Electrical JA	NEC-Correlating Committee CMP 5
4	Anthony	Tassone	[R/T]	UL Solutions	CMP 3 CMP 16
5	Chad	Jones	[M]	Cisco	CMP 3
6	Sam	Rokowski	[I/M]	Maddox Inc.	CMP 3
7	George	Bish	[M]	Amazon/Ring Protect Inc	CMP 16
8	Trevor	Bowmer	[U]	Telecom Consulting	NEC Correlating Committee CMP 16
9	Ronald	Tellas	[M]	CCCA	CMP 3 CMP 16
10	Tim	Mikloiche	[E]	IAEI	CMP 3
11	Ryan	Jackosn	[M]	Steel Tube Industry	CMP 3
12	Diana	Lettkeman	[M]	Dish	CMP 16
13	John	Kacperski	[L]	IBEW	CMP 16

Public Comment No. 197-NFPA 70-2024 [Section No. 722.12]

722.12 Uses Not Permitted.

The uses not permitted for limited energy cables shall not be in accordance with 722.12(A) through 722.12(F).

(1) **(A) Class 2 Cables.** Class 2 cables shall not be permitted for any applications that are not part of a Class 2 circuit.

Exception: Use of Class 2 cables for other applications shall be permitted if the cable has been listed as suitable for the other applications.

(B) Class 3 Cables. Class 3 cables shall not be permitted for any applications that are not part of a Class 2 or a Class 3 circuit.

Exception: Use of Class 3 cables for other applications shall be permitted if the cable has been listed as suitable for the other applications.

(C) Class 4 Cables. Class 4 cables shall not be permitted for any applications that are not part of a Class 4 system.

Exception:

~~Use~~

Use of Class 4 cable for other applications shall be permitted if the cable has been listed as suitable for the other applications.

(D) Power-limited Fire Alarm Cables. Power-limited fire alarm cables shall not be permitted for any applications that are not part of a power-limited-fire alarm circuit.

Exception: Use of power-limited-fire alarm cables for other applications shall be permitted if the cable has been listed as suitable for the other applications.

(E) Communications Cables. Communications cables shall not be permitted for any applications that are not part of a communications circuit, a network-powered broadband communications low-power circuit, a class 2 or class 3 circuit, a power-limited fire alarm circuit; or a radio frequency community antenna television circuit.

Exception: Use of communications cables for other applications shall be permitted if the cable has been listed as suitable for the other applications.

(F) CATV-type Coaxial Cables. CATV-type coaxial cables shall not be permitted for any applications that are not part of a radio frequency community antenna television circuit.

Exception: Use of CATV-type coaxial cables for other applications shall be permitted if the cable has been listed as suitable for the other applications.

Statement of Problem and Substantiation for Public Comment

Section 722.12 is incomplete since it only includes Class 4 cables; the remaining limited-energy cables were omitted. The recommended text covers the missing cables.

The "(1)" next to "(A)" is not part of the recommended text. TerraView did it.

Related Public Comments for This Document

Related Comment	Relationship
Public Comment No. 1567-NFPA 70-2024 [Article 722]	

Related Item

- Global FCR-238

Submitter Information Verification

Submitter Full Name: David Kiddoo
Organization: CCCA
Affiliation: Communications Cable & Connectivity Association
Street Address:
City:
State:
Zip:

Submittal Date: Wed Jul 24 06:38:27 EDT 2024
Committee: NEC-P03

Public Comment No. 904-NFPA 70-2024 [Section No. 722.12]

~~**722.12** Uses Not Permitted.~~

~~Class 4 cables shall not be permitted for any applications that are not part of a Class 4 system.~~

~~*Exception: Use of Class 4 cable for other applications shall be permitted if the cable has been listed as suitable for the other applications.*~~

Statement of Problem and Substantiation for Public Comment

This is covered in 722.110 and 722.150 and can be deleted.

Related Item

- FCR 238

Submitter Information Verification

Submitter Full Name: Ryan Jackson
Organization: Self-employed
Street Address:
City:
State:
Zip:

Submittal Date: Wed Aug 07 13:52:59 EDT 2024
Committee: NEC-P03

Public Comment No. 222-NFPA 70-2024 [Section No. 722.14]

722.14 Cables Containing Communications and Power Circuits.

Cables carrying data or communications circuits as well as power circuits shall be classified as electrical power circuits in accordance with the type of electrical power carried.

Exception: PoE circuits shall be permitted to be classified as communications~~ and~~ . Class 2 or Class 3.

Informational Note: ~~- Communications circuits carrying power in accordance with Article 805, Part II, 820.15~~ ; ~~-~~ See 830.15 ~~, or 840.160 are considered according to their appropriate article for each type of circuit~~ . for information on powering network-powered communications systems .

Statement of Problem and Substantiation for Public Comment

Part II of Article 805, 820.15 and 840.160 have been deleted by the First Draft. Only 830.15 remains in the first draft. Accordingly, the Informational Note should be revised.

This PC recommends the following text:

Informational Note: See 830.15 for information on powering network-powered communications systems.

The exception was edited for clarity.

Related Public Comments for This Document

Related Comment	Relationship
Public Comment No. 1567-NFPA 70-2024 [Article 722]	

Related Item

- Global FCR-238

Submitter Information Verification

Submitter Full Name: David Kiddoo
Organization: CCCA
Affiliation: Communications Cable & Connectivity Association
Street Address:
City:
State:
Zip:

Submittal Date: Wed Jul 24 08:58:54 EDT 2024
Committee: NEC-P03

Public Comment No. 906-NFPA 70-2024 [Section No. 722.14]

~~**722.14** Cables Containing Communications and Power Circuits.~~

~~Cables carrying data or communications circuits as well as power circuits shall be classified as electrical power circuits in accordance with the type of electrical power carried.~~

~~*Exception: PoE circuits shall be permitted to be classified as communications and Class 2 or Class 3.*~~

~~Informational Note: Communications circuits carrying power in accordance with Article 805 , Part II, 820.15 , 830.15 , or 840.160 are considered according to their appropriate article for each type of circuit.~~

Statement of Problem and Substantiation for Public Comment

This section seems to address material that is outside the scope of this article. If that is not the intent, it needs to be rewritten much more clearly. What exacly is a "power circuit"? Does that include lighting? Normally we say "conductors for light and power." And how about nonpower-limited fire alarm? Is that a power circuit? Is a Class 1 power-limited circuit a power circuit or a control circuit? And what does it mean to classify it in accordance with the type of power carried? Is that ac vesus dc? Or is it refering to a function (control, signalling, etc.) rather than a "type" of power?
The exception is also not needed becuase Power over Ethernet is already a Class 2 circuit. More specifically, it is a Class 2 power-limited circuit as opposed to a Class 2 remote-control or Class 2 signalling circuit.
It seems that the seperation and cabling requirements of (what was formerly) 725.136 and 725.139 handles this issue already. Hopefully the reconstruction of Chapter 7/8 doesn't think this sentence handles that complex issue, because it doesn't.

Related Item

• FCR 238

Submitter Information Verification

Submitter Full Name: Ryan Jackson
Organization: Self-employed
Street Address:
City:
State:
Zip:

Submittal Date: Wed Aug 07 14:01:05 EDT 2024
Committee: NEC-P03

Public Comment No. 935-NFPA 70-2024 [Section No. 722.14]

722.14 Cables Containing Communications and Power Circuits.

~~Cables~~ Limited-energy cables and hybrid optical fiber cables carrying data or communications circuits as well as power circuits shall be classified as electrical power circuits in accordance with the type of electrical power carried.

Exception: PoE circuits shall be permitted to be classified as communications and Class 2 or Class 3.

Informational Note: Communications circuits carrying power in accordance

~~with Article 805 , Part II,~~

with 820.15

~~,~~

or 830.15

~~, or 840.160 are~~

are considered according to their appropriate article for each type of circuit.

Additional Proposed Changes

File Name	Description	Approved
Limited_Energy_Roster-2026_2nd_Draft.pdf	Limited-Energy Task Group Roster-2nd Draft	

Statement of Problem and Substantiation for Public Comment

This public comment is submitted on behalf of the Limited-Energy Task Group (see attached roster) to accomplish the following:
(1) Utilize the newly defined term “Limited-Energy Cables” by PC-1371 to create consistency and ensure this requirement applies to all types of limited-energy cables including communications cables.

(2) Include hybrid optical fiber cables to ensure this requirement applies to those types of installations and utilize the correct industry terminology.

(3) Delete the incorrect references in the informational note, as referenced sections have been deleted and incorporated into the new Article 722.

Related Public Comments for This Document

Related Comment	Relationship
Public Comment No. 1371-NFPA 70-2024 [New Definition after Definition: Cable Joint.]	PC creating new definition for limited-energy cables.

Related Item

- FCR-238

Submitter Information Verification

Submitter Full Name: Kyle Krueger
Organization: NECA
Affiliation: NECA
Street Address:
City:
State:
Zip:

Submittal Date: Wed Aug 07 17:21:13 EDT 2024
Committee: NEC-P03

Limited Energy Task Group [2nd Draft]					
No.	First Name	Last Name	Class.	Organization	Other Committees
1	Kyle	Krueger	[I/M]	NECA	NEC-Correlating Comittee CMP 3 NFPA 72-Correlating Committee
2	Ernie	Gallo	[U/T]	NEBScore	
3	Derrick	Atkins	[L]	Minneapolis Electrical JA	NEC-Correlating Committee CMP 5
4	Anthony	Tassone	[R/T]	UL Solutions	CMP 3 CMP 16
5	Chad	Jones	[M]	Cisco	CMP 3
6	Sam	Rokowski	[I/M]	Maddox Inc.	CMP 3
7	George	Bish	[M]	Amazon/Ring Protect Inc	CMP 16
8	Trevor	Bowmer	[U]	Telecom Consulting	NEC Correlating Committee CMP 16
9	Ronald	Tellas	[M]	CCCA	CMP 3 CMP 16
10	Tim	Mikloiche	[E]	IAEI	CMP 3
11	Ryan	Jackosn	[M]	Steel Tube Industry	CMP 3
12	Diana	Lettkeman	[M]	Dish	CMP 16
13	John	Kacperski	[L]	IBEW	CMP 16

Public Comment No. 909-NFPA 70-2024 [Section No. 722.30]

~~**722.30** Securing and Supporting.~~

~~**(A)** General.~~

~~In addition to the requirements of 720.19 and 720.30 , limited-energy and communications cables shall be installed in accordance with 722.30(A)(1) and 722.30(A)(2) .~~

~~**(1)** Supporting.~~

~~Cables installed exposed on the surface of ceilings and sidewalls shall be supported by the building structure in such a manner that the cable will not be damaged by normal building use.~~

~~**(2)** Securing.~~

~~Such cables shall be secured by hardware, including straps, staples, cables ties listed and identified for securement and support, and hangers, or similar fittings designed and installed so as not to damage the cable.~~

~~**(B)** Spaces Used for Environmental Air (Plenums).~~

~~Limited-energy and communications cables installed in other spaces used for environmental air (plenums) shall be secured and supported in accordance with 720.30(G) .~~

Statement of Problem and Substantiation for Public Comment

The comment seeks to bring the language currently (First Draft) residing in 722.30 to 720.30. Most of this section's requirements are already there, and there is no reason to have two sections in two different articles when the goal of the entire reconstruction of Chapters 7 and 8 is usablitiy, simplification, and the reduction of redundancy.
A companion comment to relocate the text to 720.30 will be submitted.

Related Public Comments for This Document

Related Comment	Relationship
Public Comment No. 908-NFPA 70-2024 [Section No. 720.30(A)]	

Related Item

- FCR 238

Submitter Information Verification

Submitter Full Name: Ryan Jackson
Organization: Self-employed
Street Address:
City:
State:
Zip:

Submittal Date: Wed Aug 07 14:38:06 EDT 2024
Committee: NEC-P03

Public Comment No. 226-NFPA 70-2024 [Section No. 722.30(B)]

~~(B) Spaces Used for Environmental Air (Plenums).~~

~~Limited-energy and communications cables installed in other spaces used for environmental air (plenums) shall be secured and supported in accordance with 720.30(C).~~

Statement of Problem and Substantiation for Public Comment

Reference to Article 720, Part II is in the recommended text in PC 192 for 722.4, Other Articles.

Section 4.1.1 of the 2023 NEC Style Manual recommends avoiding redundant references.

Related Public Comments for This Document

Related Comment	Relationship
Public Comment No. 1567-NFPA 70-2024 [Article 722]	

Related Item

- FRC-238

Submitter Information Verification

Submitter Full Name: David Kiddoo
Organization: CCCA
Affiliation: Communications Cable & Connectivity Association
Street Address:
City:
State:
Zip:

Submittal Date: Wed Jul 24 09:25:09 EDT 2024
Committee: NEC-P03

Public Comment No. 1415-NFPA 70-2024 [Section No. 722.100(A)]

(A) Listing of Cables.

Cables installed as wiring methods within buildings shall be listed as resistant to the spread of fire and other criteria in accordance with 722.100(A)(1) through 722.100(A)(16).

Informational Note No. 1: See UL 13, *Standard for Power-Limited Circuit Cables*, for applicable requirements for listing of Class 2 and Class 3 cable and power-limited tray cable (PLTC).

Informational Note No. ~~2: See UL 1424, *Cables for Power-Limited Fire-Alarm Circuits* , for applicable requirements for listing of power-limited fire alarm cable. Informational Note No.~~ 3: See UL 1651, *Optical Fiber Cable*, for applicable requirements for listing of optical fiber cable.

Informational Note No. 4: See UL 1400-2, *Outline for Fault-Managed Power Systems — Part 2: Requirements for Class 4 Cables*, for applicable requirements for listing of Class 4 cable.

(1) Plenum Cable.

Plenum cable shall be listed as suitable for use in ducts, plenums, and other space for environmental air and shall be listed as having adequate fire-resistant and low-smoke producing characteristics. Plenum cable types shall be identified in Table 722.102(A).

Informational Note: See NFPA 262-2023, *Standard Method of Test for Flame Travel and Smoke of Wires and Cables for Use in Air-Handling Spaces*, for the test method used to determine that a cable is low-smoke producing and fire resistant, exhibiting a maximum peak optical density of 0.50 or less, an average optical density of 0.15 or less, and a maximum flame spread distance of 1.52 m (5 ft) or less.

(2) Riser Cable.

Riser cable shall be listed as suitable for use in a vertical run in a shaft or from floor to floor and shall be listed as having fire-resistant characteristics capable of preventing the carrying of fire from floor to floor.

Informational Note: See ANSI/UL 1666-2012, *Test for Flame Propagation Height of Electrical and Optical-Fiber Cable Installed Vertically in Shafts*, for the cable requirements defining fire-resistant characteristics capable of preventing the carrying of fire from floor to floor.

(3) General-Purpose Cable.

General-purpose cable shall be listed as resistant to the spread of fire and as suitable for general-purpose use, except for use in risers, ducts, plenums, and other space used for environmental air.

Informational Note: See UL 2556, *Wire and Cable Test Methods*, for defining *resistant to the spread of fire*. One method is to demonstrate that the cables do not spread fire to the top of the tray in the UL Flame Exposure, Vertical Tray Flame Test. The smoke measurements in the test method are not applicable. A method of defining *resistant to the spread of fire* is for the damage (char length) not to exceed 1.5 m (4 ft 11 in.) when performing the FT4 Vertical Flame Test.

(4) Alternative General-Purpose Cable.

Alternative general-purpose optical fiber cable shall be listed as suitable for general-purpose use, with the exception of risers and plenums, and shall also be resistant to the spread of fire.

Informational Note: See CSA C22.2 No. 0.3-M-2001, *Test Methods for Electrical Wires and Cables*, for the CSA Vertical Flame Test — cables in cable trays, that can also be used to define *resistant to the spread of fire* when the damage (char length) does not exceed 1.5 m (4 ft 11 in.).

(5) Limited-Use Cable.

Limited-use cable shall be listed as suitable for use in dwellings and raceways and shall be listed as resistant to flame spread.

Informational Note: See ANSI/UL 2556, *Standard for Wire and Cable Test Methods*, for one method of determining that cable is resistant to flame spread by testing the cable to the FV-2/VW-1 test.

(6) Type PLTC.

Type PLTC nonmetallic-sheathed, power-limited tray cable shall be listed as being suitable for cable trays, resistant to the spread of fire, and sunlight- and moisture-resistant. Type PLTC cable used in a wet location shall be listed for use in wet locations and marked “wet” or “wet location.”

Informational Note: See ANSI/UL 1685-2010, *Standard for Safety for Vertical-Tray Fire-Propagation and Smoke-Release Test for Electrical and Optical-Fiber Cables*, for the UL Flame Exposure, Vertical Tray Flame Test that is used to determine resistance to the spread of fire when cables do not spread fire to the top of the tray. The smoke measurements in the test method are not applicable. See CSA C22.2 No. 0.3-M-2001, *Test Methods for Electrical Wires and Cables*, for the CSA Vertical Flame Test — cables in cable trays that can also be used to define *resistant to the spread of fire* when the damage (char length) does not exceed 1.5 m (4 ft 11 in.).

(7) Circuit Integrity (CI) Cable, Fire-Resistive Cable System, or Electrical Circuit Protective System.

Cables that are used for survivability of critical circuits under fire conditions shall comply with 722.100(A)(7)(a), 722.100(A)(7)(b), or 722.100(A)(7)(c).

Informational Note: See *NFPA 72*-2025, *National Fire Alarm and Signaling Code*, 12.4.3 and 12.4.4 for additional information on fire alarm CI cable, fire-resistive cable systems, or electrical circuit protective systems used for fire alarm circuits to comply with the survivability requirements to maintain the circuit's electrical function during fire conditions for a defined period of time.

(a) *CI Cables.* CI cables of the types specified in 722.100(A)(1), 722.100(A)(2), 722.100(A)(3), 722.100(A)(4), and 722.100(A)(6) and used for survivability of critical circuits shall be marked with the additional classification using the suffix "CI." To maintain its listed fire-resistive rating, CI cable shall only be installed in free air in accordance with 722.180(B). CI cables shall only be permitted to be installed in a raceway where specifically listed and marked as part of a fire-resistive cable system as covered in 722.100(A)(7)(b).

Informational Note: See UL 2196, *Fire Test for Circuit Integrity of Fire-Resistive Power, Instrumentation, Control and Data Cables*, and UL 1425, *Cables for Non–Power-Limited Fire-Alarm Circuits*, for information on establishing a rating for CI cable. The *UL Guide Information for Nonpower-limited Fire Alarm Circuits (HNHT)* contains information to identify the cable and its installation limitations to maintain the fire-resistive rating.

(b) *Fire-Resistive Cables.* Fire-resistive cables of the types specified in 722.100(A)(1), 722.100(A)(2), 722.100(A)(3), 722.100(A)(4), 722.100(A)(6), and 722.100(A)(7)(a) that are part of a fire-resistive cable system shall be identified with the system identifier and hourly rating marked on the protectant or the smallest unit container and installed in accordance with the listing of the system.

Informational Note: See UL 2196, *Fire Test for Circuit Integrity of Fire-Resistive Power, Instrumentation, Control and Data Cables*, for information on establishing a rating for a fire-resistive cable system. The *UL Guide Information for Electrical Circuit Integrity Systems (FHIT)* contains information to identify the system and its installation limitations to maintain a minimum fire-resistive rating.

(c) *Electrical Circuit Protective System.* Protectants for cables of the types specified in 722.100(A)(1), 722.100(A)(2), 722.100(A)(3), 722.100(A)(4), and 722.100(A)(6) that are part of an electrical circuit protective system shall be identified with the protective system identifier and hourly rating marked on the protectant or the smallest unit container and installed in accordance with the listing of the protective system.

Informational Note: See UL 1724, *Fire Tests for Electrical Circuit Protective Systems*, for information on establishing a rating for an electrical circuit protective system. The *UL Guide Information for Electrical Circuit Integrity Systems (FHIT)* contains information to identify the system and its installation limitations to maintain the fire-resistive rating.

(8) Class 3 Single Conductors.

Class 3 single conductors used as other wiring within buildings shall be listed Type CL3 and shall not be smaller than 18 AWG.

Informational Note: See ANSI/UL 1685-2010, *Standard for Safety for Vertical-Tray Fire-Propagation and Smoke-Release Test for Electrical and Optical-Fiber Cables*, for the UL Flame Exposure, Vertical Tray Flame Test that is used to determine resistance to the spread of fire when cables do not spread fire to the top of the tray. The smoke measurements in the test method are not applicable. See CSA C22.2 No. 0.3-M-2001, *Test Methods for Electrical Wires and Cables*, for the CSA Vertical Flame Test — cables in cable trays that can also be used to define *resistant to the spread of fire* when the damage (char length) does not exceed 1.5 m (4 ft 11 in.).

(9) Limited Power (LP) Cable.

Class 2 and Class 3 LP cables shall be listed as suitable for carrying power and data up to a specified current limit for each conductor without exceeding the temperature rating of the cable. The cables shall be marked with the suffix "-LP (XXA)" where XXA designates the current limit in amperes per conductor.

Informational Note: An example of the marking on 23 AWG, 4-pair, Class 2 cable rated 75°C (167°F) with an LP current rating of 0.6 amperes per conductor is "CL2-LP (0.6A) 75°C 23 AWG 4-pair."

(10) Under-Carpet Cables.

Under-carpet cable shall be listed as suitable for use under carpet, floor covering, modular tiles, and planks.

Informational Note: See UL 444, *Standard for Safety for Communications Cables*, for the compressive loading test used to determine the suitability of cable for under-carpet use.

(11) Wet Locations.

Cable used in a wet location shall be listed for use in wet locations and be marked "wet" or "wet location" or have a moisture-impervious metal sheath.

(12) Field-Assembled Optical Fiber Cables.

Field-assembled optical fiber cable shall comply with 722.100(A)(12)(a) through 722.100(A)(12)(d).

(a) The specific combination of jacket and optical fibers intended to be installed as a field-assembled optical fiber cable shall be one of the types in 722.100(A)(1), 722.100(A)(2), or 722.100(A)(3) and shall be marked in accordance with Table 722.102(A).

(b) The jacket of a field-assembled optical fiber cable shall have a surface marking indicating the specific optical fibers with which it is identified for use.

(c) The optical fibers shall have a permanent marking, such as a marker tape, indicating the jacket with which they are identified for use.

(d) The jacket without fibers shall meet the listing requirements for communications raceways in 722.110 and 722.111 in accordance with the cable marking.

(13) Cables Containing Optical Fibers.

Composite optical fiber cables shall be listed as electrical cables based on the type of electrical conductors.

(14) Class 2 and Class 3 Cable Voltage and Temperature Ratings.

Class 2 cables shall have a voltage rating of not less than 150 volts. Class 3 cables shall have a voltage rating of not less than 300 volts. Class 2 and Class 3 cables shall have a temperature rating of not less than 60°C (140°F).

(15) Power-Limited Fire Alarm (PLFA) Cables.

PFLA cables shall comply with 722.100(A)(15)(a) through 722.100(A)(15)(d).

(a) Conductors for cables, other than coaxial cables, shall be solid or stranded copper. Coaxial cables shall be permitted to use 30 percent conductivity copper-covered steel center conductor wire.

(b) The size of conductors in a multiconductor cable shall not be smaller than 26 AWG. Single conductors shall not be smaller than 18 AWG. Conductors of 26 AWG shall be permitted only where spliced with a connector listed as suitable for 26 AWG to 24 AWG or larger conductors that are terminated on equipment or where the 26 AWG conductors are terminated on equipment listed as suitable for 26 AWG conductors.

(c) Cables shall have a voltage rating of not less than 300 volts. (d) Cables shall have a temperature rating of not less than 60°C (140°F).

(16) Class 4 Cable Construction.

(a) *Sizes.* Conductors of sizes not smaller than 24 AWG shall be permitted to be used.

(b) *Insulation.* Insulation on conductors shall be rated not less than 450 volts dc.

(c) *Voltage Rating.* Cables shall have a voltage rating of not less than 450 volts dc. Voltage ratings shall not be marked on the cables.

(d) *Temperature Rating.* Cables shall have a temperature rating of not less than 60°C (140°F).

Additional Proposed Changes

File Name	Description	Approved
Limited_Energy_Roster-2026_2nd_Draft.pdf	Limited-Energy Task Group Roster-2nd Draft	

Statement of Problem and Substantiation for Public Comment

This public comment is submitted on behalf of the Limited-Energy Task Group (see attached roster) to delete Informational Note No.2 of 722.100(A) as it has been relocated to section/table 722.170 for PLFA cable applications.

Related Public Comments for This Document

Related Comment	Relationship
Public Comment No. 1416-NFPA 70-2024 [Section No. 722.170]	PC relocating info note 2 to section/table 722.170
Public Comment No. 1416-NFPA 70-2024 [Section No. 722.170]	

Related Item

• FCR-238

Submitter Information Verification

Submitter Full Name: Kyle Krueger
Organization: NECA
Affiliation: NECA
Street Address:
City:
State:
Zip:

Submittal Date: Thu Aug 22 15:09:41 EDT 2024
Committee: NEC-P03

Limited Energy Task Group [2nd Draft]					
No.	First Name	Last Name	Class.	Organization	Other Committees
1	Kyle	Krueger	[I/M]	NECA	NEC-Correlating Comittee CMP 3 NFPA 72-Correlating Committee
2	Ernie	Gallo	[U/T]	NEBScore	
3	Derrick	Atkins	[L]	Minneapolis Electrical JA	NEC-Correlating Committee CMP 5
4	Anthony	Tassone	[R/T]	UL Solutions	CMP 3 CMP 16
5	Chad	Jones	[M]	Cisco	CMP 3
6	Sam	Rokowski	[I/M]	Maddox Inc.	CMP 3
7	George	Bish	[M]	Amazon/Ring Protect Inc	CMP 16
8	Trevor	Bowmer	[U]	Telecom Consulting	NEC Correlating Committee CMP 16
9	Ronald	Tellas	[M]	CCCA	CMP 3 CMP 16
10	Tim	Mikloiche	[E]	IAEI	CMP 3
11	Ryan	Jackosn	[M]	Steel Tube Industry	CMP 3
12	Diana	Lettkeman	[M]	Dish	CMP 16
13	John	Kacperski	[L]	IBEW	CMP 16

Public Comment No. 1421-NFPA 70-2024 [Section No. 722.100(A)]

(A) Listing of Cables.

Cables installed as wiring methods within buildings shall be listed as resistant to the spread of fire and other criteria in accordance with 722.100(A)(1) through 722.100(A)(16).

Informational Note No. 1: See UL 13, *Standard for Power-Limited Circuit Cables*, for applicable requirements for listing of Class 2 and Class 3 cable and power-limited tray cable (PLTC).

Informational Note No. 2: See UL 1424, *Cables for Power-Limited Fire-Alarm Circuits*, for applicable requirements for listing of power-limited fire alarm cable.

Informational Note No.

~~3: See UL 1651, *Optical Fiber Cable* , for applicable requirements for listing of optical fiber cable.Informational Note No.~~

4: See UL 1400-2, *Outline for Fault-Managed Power Systems — Part 2: Requirements for Class 4 Cables* , for applicable requirements for listing of Class 4 cable.

(1) Plenum Cable.

Plenum cable shall be listed as suitable for use in ducts, plenums, and other space for environmental air and shall be listed as having adequate fire-resistant and low-smoke producing characteristics. Plenum cable types shall be identified in Table 722.102(A) .

Informational Note: See NFPA 262-2023, *Standard Method of Test for Flame Travel and Smoke of Wires and Cables for Use in Air-Handling Spaces* , for the test method used to determine that a cable is low-smoke producing and fire resistant, exhibiting a maximum peak optical density of 0.50 or less, an average optical density of 0.15 or less, and a maximum flame spread distance of 1.52 m (5 ft) or less.

(2) Riser Cable.

Riser cable shall be listed as suitable for use in a vertical run in a shaft or from floor to floor and shall be listed as having fire-resistant characteristics capable of preventing the carrying of fire from floor to floor.

Informational Note: See ANSI/UL 1666-2012, *Test for Flame Propagation Height of Electrical and Optical-Fiber Cable Installed Vertically in Shafts* , for the cable requirements defining fire-resistant characteristics capable of preventing the carrying of fire from floor to floor.

(3) General-Purpose Cable.

General-purpose cable shall be listed as resistant to the spread of fire and as suitable for general-purpose use, except for use in risers, ducts, plenums, and other space used for environmental air.

Informational Note: See UL 2556, *Wire and Cable Test Methods* , for defining *resistant to the spread of fire* . One method is to demonstrate that the cables do not spread fire to the top of the tray in the UL Flame Exposure, Vertical Tray Flame Test. The smoke measurements in the test method are not applicable. A method of defining *resistant to the spread of fire* is for the damage (char length) not to exceed 1.5 m (4 ft 11 in.) when performing the FT4 Vertical Flame Test.

(4) Alternative General-Purpose Cable.

Alternative general-purpose optical fiber cable shall be listed as suitable for general-purpose use, with the exception of risers and plenums, and shall also be resistant to the spread of fire.

Informational Note: See CSA C22.2 No. 0.3-M-2001, *Test Methods for Electrical Wires and Cables* , for the CSA Vertical Flame Test — cables in cable trays, that can also be used to define *resistant to the spread of fire* when the damage (char length) does not exceed 1.5 m (4 ft 11 in.).

(5) Limited-Use Cable.

Limited-use cable shall be listed as suitable for use in dwellings and raceways and shall be listed as resistant to flame spread.

Informational Note: See ANSI/UL 2556, *Standard for Wire and Cable Test Methods* , for one method of determining that cable is resistant to flame spread by testing the cable to the FV-2/VW-1 test.

(6) Type PLTC.

Type PLTC nonmetallic-sheathed, power-limited tray cable shall be listed as being suitable for cable trays, resistant to the spread of fire, and sunlight- and moisture-resistant. Type PLTC cable used in a wet location shall be listed for use in wet locations and marked “wet” or “wet location.”

Informational Note: See ANSI/UL 1685-2010, *Standard for Safety for Vertical-Tray Fire-Propagation and Smoke-Release Test for Electrical and Optical-Fiber Cables* , for the UL Flame Exposure, Vertical Tray Flame Test that is used to determine resistance to the spread of fire when cables do not spread fire to the top of the tray. The smoke measurements in the test method are not applicable. See CSA C22.2 No. 0.3-M-2001, *Test Methods for Electrical Wires and Cables* , for the CSA Vertical Flame Test — cables in cable trays that can also be used to define *resistant to the spread of fire* when the damage (char length) does not exceed 1.5 m (4 ft 11 in.).

(7) Circuit Integrity (CI) Cable, Fire-Resistive Cable System, or Electrical Circuit Protective System.

Cables that are used for survivability of critical circuits under fire conditions shall comply with 722.100(A)(7)(a) , 722.100(A)(7)(b) , or 722.100(A)(7)(c) .

Informational Note: See *NFPA 72* -2025, *National Fire Alarm and Signaling Code* , 12.4.3 and 12.4.4 for additional information on fire alarm CI cable, fire-resistive cable systems, or electrical circuit protective systems used for fire alarm circuits to comply with the survivability requirements to maintain the circuit's electrical function during fire conditions for a defined period of time.

(a) *CI Cables.* CI cables of the types specified in 722.100(A)(1) , 722.100(A)(2) , 722.100(A)(3) , 722.100(A)(4) , and 722.100(A)(6) and used for survivability of critical circuits shall be marked with the additional classification using the suffix "CI." To maintain its listed fire-resistive rating, CI cable shall only be installed in free air in accordance with 722.180(B) . CI cables shall only be permitted to be installed in a raceway where specifically listed and marked as part of a fire-resistive cable system as covered in 722.100(A)(7)(b) .

Informational Note: See UL 2196, *Fire Test for Circuit Integrity of Fire-Resistive Power, Instrumentation, Control and Data Cables* , and UL 1425, *Cables for Non–Power-Limited Fire-Alarm Circuits* , for information on establishing a rating for CI cable. The *UL Guide Information for Nonpower-limited Fire Alarm Circuits (HNHT)* contains information to identify the cable and its installation limitations to maintain the fire-resistive rating.

(b) *Fire-Resistive Cables.* Fire-resistive cables of the types specified in 722.100(A)(1) , 722.100(A)(2) , 722.100(A)(3) , 722.100(A)(4) , 722.100(A)(6) , and 722.100(A)(7)(a) that are part of a fire-resistive cable system shall be identified with the system identifier and hourly rating marked on the protectant or the smallest unit container and installed in accordance with the listing of the system.

Informational Note: See UL 2196, *Fire Test for Circuit Integrity of Fire-Resistive Power, Instrumentation, Control and Data Cables* , for information on establishing a rating for a fire-resistive cable system. The *UL Guide Information for Electrical Circuit Integrity Systems (FHIT)* contains information to identify the system and its installation limitations to maintain a minimum fire-resistive rating.

(c) *Electrical Circuit Protective System.* Protectants for cables of the types specified in 722.100(A)(1) , 722.100(A)(2) , 722.100(A)(3) , 722.100(A)(4) , and 722.100(A)(6) that are part of an electrical circuit protective system shall be identified with the protective system identifier and hourly rating marked on the protectant or the smallest unit container and installed in accordance with the listing of the protective system.

Informational Note: See UL 1724, *Fire Tests for Electrical Circuit Protective Systems* , for information on establishing a rating for an electrical circuit protective system. The *UL Guide Information for Electrical Circuit Integrity Systems (FHIT)* contains information to identify the system and its installation limitations to maintain the fire-resistive rating.

(8) Class 3 Single Conductors.

Class 3 single conductors used as other wiring within buildings shall be listed Type CL3 and shall not be smaller than 18 AWG.

Informational Note: See ANSI/UL 1685-2010, *Standard for Safety for Vertical-Tray Fire-Propagation and Smoke-Release Test for Electrical and Optical-Fiber Cables* , for the UL Flame Exposure, Vertical Tray Flame Test that is used to determine resistance to the spread of fire when cables do not spread fire to the top of the tray. The smoke measurements in the test method are not applicable. See CSA C22.2 No. 0.3-M-2001, *Test Methods for Electrical Wires and Cables* , for the CSA Vertical Flame Test — cables in cable trays that can also be used to define *resistant to the spread of fire* when the damage (char length) does not exceed 1.5 m (4 ft 11 in.).

(9) Limited Power (LP) Cable.

Class 2 and Class 3 LP cables shall be listed as suitable for carrying power and data up to a specified current limit for each conductor without exceeding the temperature rating of the cable. The cables shall be marked with the suffix "-LP (XXA)" where XXA designates the current limit in amperes per conductor.

Informational Note: An example of the marking on 23 AWG, 4-pair, Class 2 cable rated 75°C (167°F) with an LP current rating of 0.6 amperes per conductor is "CL2-LP (0.6A) 75°C 23 AWG 4-pair."

(10) Under-Carpet Cables.

Under-carpet cable shall be listed as suitable for use under carpet, floor covering, modular tiles, and planks.

Informational Note: See UL 444, *Standard for Safety for Communications Cables* , for the compressive loading test used to determine the suitability of cable for under-carpet use.

(11) Wet Locations.

Cable used in a wet location shall be listed for use in wet locations and be marked "wet" or "wet location" or have a moisture-impervious metal sheath.

(12) Field-Assembled Optical Fiber Cables.

Field-assembled optical fiber cable shall comply with 722.100(A)(12)(a) through 722.100(A)(12)(d) .

(1) The specific combination of jacket and optical fibers intended to be installed as a field-assembled optical fiber cable shall be one of the types in 722.100(A)(1) , 722.100(A)(2) , or 722.100(A)(3) and shall be marked in accordance with Table 722.102(A) .

(2) The jacket of a field-assembled optical fiber cable shall have a surface marking indicating the specific optical fibers with which it is identified for use.

(3) The optical fibers shall have a permanent marking, such as a marker tape, indicating the jacket with which they are identified for use.

(4) The jacket without fibers shall meet the listing requirements for communications raceways in 722.110 and 722.111 in accordance with the cable marking.

(13) Cables Containing Optical Fibers.

Composite optical fiber cables shall be listed as electrical cables based on the type of electrical conductors.

(14) Class 2 and Class 3 Cable Voltage and Temperature Ratings.

Class 2 cables shall have a voltage rating of not less than 150 volts. Class 3 cables shall have a voltage rating of not less than 300 volts. Class 2 and Class 3 cables shall have a temperature rating of not less than 60°C (140°F).

(15) Power-Limited Fire Alarm (PLFA) Cables.

PFLA cables shall comply with 722.100(A)(15)(a) through 722.100(A)(15)(d) .

(1) Conductors for cables, other than coaxial cables, shall be solid or stranded copper. Coaxial cables shall be permitted to use 30 percent conductivity copper-covered steel center conductor wire.

(2) The size of conductors in a multiconductor cable shall not be smaller than 26 AWG. Single conductors shall not be smaller than 18 AWG. Conductors of 26 AWG shall be permitted only where spliced with a connector listed as suitable for 26 AWG to 24 AWG or larger conductors that are terminated on equipment or where the 26 AWG conductors are terminated on equipment listed as suitable for 26 AWG conductors.

(3) Cables shall have a voltage rating of not less than 300 volts.

(4) Cables shall have a temperature rating of not less than 60°C (140°F).

(16) Class 4 Cable Construction.

(a) *Sizes.* Conductors of sizes not smaller than 24 AWG shall be permitted to be used.

(b) *Insulation.* Insulation on conductors shall be rated not less than 450 volts dc.

(c) *Voltage Rating.* Cables shall have a voltage rating of not less than 450 volts dc. Voltage ratings shall not be marked on the cables.

(d) *Temperature Rating.* Cables shall have a temperature rating of not less than 60°C (140°F).

Additional Proposed Changes

File Name	Description	Approved
Limited_Energy_Roster-2026_2nd_Draft.pdf	Limited-Energy Task Group Roster-2nd Draft	

Statement of Problem and Substantiation for Public Comment

This public comment is submitted on behalf of the Limited-Energy Task Group (see attached roster) to delete Informational Note No.3 of 722.100(A) as it has been relocated to section/Table 722.160(A) for optical fiber cable applications.

Related Public Comments for This Document

Related Comment	Relationship
Public Comment No. 1423-NFPA 70-2024 [Section No. 722.100(A)(12)]	PC deleting section 722.100(A)(12) as it is relocated to 722.160(B)
Public Comment No. 1424-NFPA 70-2024 [Section No. 722.160]	PC relocating info note 3 from 722.100(A) and section 722.100(A)(12) to section 722.160(A)-(B)
Public Comment No. 1423-NFPA 70-2024 [Section No. 722.100(A)(12)]	
Public Comment No. 1424-NFPA 70-2024 [Section No. 722.160]	

Related Item

- FCR-238

Submitter Information Verification

Submitter Full Name: Kyle Krueger
Organization: NECA
Affiliation: NECA
Street Address:
City:
State:
Zip:

Submittal Date: Thu Aug 22 15:25:10 EDT 2024
Committee: NEC-P03

Limited Energy Task Group [2nd Draft]					
No.	First Name	Last Name	Class.	Organization	Other Committees
1	Kyle	Krueger	[I/M]	NECA	NEC-Correlating Comittee CMP 3 NFPA 72-Correlating Committee
2	Ernie	Gallo	[U/T]	NEBScore	
3	Derrick	Atkins	[L]	Minneapolis Electrical JA	NEC-Correlating Committee CMP 5
4	Anthony	Tassone	[R/T]	UL Solutions	CMP 3 CMP 16
5	Chad	Jones	[M]	Cisco	CMP 3
6	Sam	Rokowski	[I/M]	Maddox Inc.	CMP 3
7	George	Bish	[M]	Amazon/Ring Protect Inc	CMP 16
8	Trevor	Bowmer	[U]	Telecom Consulting	NEC Correlating Committee CMP 16
9	Ronald	Tellas	[M]	CCCA	CMP 3 CMP 16
10	Tim	Mikloiche	[E]	IAEI	CMP 3
11	Ryan	Jackosn	[M]	Steel Tube Industry	CMP 3
12	Diana	Lettkeman	[M]	Dish	CMP 16
13	John	Kacperski	[L]	IBEW	CMP 16

Public Comment No. 1428-NFPA 70-2024 [Section No. 722.100(A)]

(A) Listing of Cables.

Cables installed as wiring methods within buildings shall be listed as resistant to the spread of fire and other criteria in accordance with 722.100(A)(1) through 722.100(A)(16).

Informational Note No. 1: See UL 13, *Standard for Power-Limited Circuit Cables*, for applicable requirements for listing of Class 2 and Class 3 cable and power-limited tray cable (PLTC).

Informational Note No. 2: See UL 1424, *Cables for Power-Limited Fire-Alarm Circuits*, for applicable requirements for listing of power-limited fire alarm cable.

Informational Note No. 3: See UL 1651, *Optical Fiber Cable*, for applicable requirements for listing of optical fiber cable.

~~Informational Note No. 4: See UL 1400-2, *Outline for Fault-Managed Power Systems — Part 2: Requirements for Class 4 Cables* , for applicable requirements for listing of Class 4 cable.~~

(1) Plenum Cable.

Plenum cable shall be listed as suitable for use in ducts, plenums, and other space for environmental air and shall be listed as having adequate fire-resistant and low-smoke producing characteristics. Plenum cable types shall be identified in Table 722.102(A) .

Informational Note: See NFPA 262-2023, *Standard Method of Test for Flame Travel and Smoke of Wires and Cables for Use in Air-Handling Spaces* , for the test method used to determine that a cable is low-smoke producing and fire resistant, exhibiting a maximum peak optical density of 0.50 or less, an average optical density of 0.15 or less, and a maximum flame spread distance of 1.52 m (5 ft) or less.

(2) Riser Cable.

Riser cable shall be listed as suitable for use in a vertical run in a shaft or from floor to floor and shall be listed as having fire-resistant characteristics capable of preventing the carrying of fire from floor to floor.

Informational Note: See ANSI/UL 1666-2012, *Test for Flame Propagation Height of Electrical and Optical-Fiber Cable Installed Vertically in Shafts* , for the cable requirements defining fire-resistant characteristics capable of preventing the carrying of fire from floor to floor.

(3) General-Purpose Cable.

General-purpose cable shall be listed as resistant to the spread of fire and as suitable for general-purpose use, except for use in risers, ducts, plenums, and other space used for environmental air.

Informational Note: See UL 2556, *Wire and Cable Test Methods* , for defining *resistant to the spread of fire* . One method is to demonstrate that the cables do not spread fire to the top of the tray in the UL Flame Exposure, Vertical Tray Flame Test. The smoke measurements in the test method are not applicable. A method of defining *resistant to the spread of fire* is for the damage (char length) not to exceed 1.5 m (4 ft 11 in.) when performing the FT4 Vertical Flame Test.

(4) Alternative General-Purpose Cable.

Alternative general-purpose optical fiber cable shall be listed as suitable for general-purpose use, with the exception of risers and plenums, and shall also be resistant to the spread of fire.

Informational Note: See CSA C22.2 No. 0.3-M-2001, *Test Methods for Electrical Wires and Cables* , for the CSA Vertical Flame Test — cables in cable trays, that can also be used to define *resistant to the spread of fire* when the damage (char length) does not exceed 1.5 m (4 ft 11 in.).

(5) Limited-Use Cable.

Limited-use cable shall be listed as suitable for use in dwellings and raceways and shall be listed as resistant to flame spread.

Informational Note: See ANSI/UL 2556, *Standard for Wire and Cable Test Methods* , for one method of determining that cable is resistant to flame spread by testing the cable to the FV-2/VW-1 test.

(6) Type PLTC.

Type PLTC nonmetallic-sheathed, power-limited tray cable shall be listed as being suitable for cable trays, resistant to the spread of fire, and sunlight- and moisture-resistant. Type PLTC cable used in a wet location shall be listed for use in wet locations and marked “wet” or “wet location.”

Informational Note: See ANSI/UL 1685-2010, *Standard for Safety for Vertical-Tray Fire-Propagation and Smoke-Release Test for Electrical and Optical-Fiber Cables* , for the UL Flame Exposure, Vertical Tray Flame Test that is used to determine resistance to the spread of fire when cables do not spread fire to the top of the tray. The smoke measurements in the test method are not applicable. See CSA C22.2 No. 0.3-M-2001, *Test Methods for Electrical Wires and Cables* , for the CSA Vertical Flame Test — cables in cable trays that can also be used to define *resistant to the spread of fire* when the damage (char length) does not exceed 1.5 m (4 ft 11 in.).

(7) Circuit Integrity (CI) Cable, Fire-Resistive Cable System, or Electrical Circuit Protective System.

Cables that are used for survivability of critical circuits under fire conditions shall comply with 722.100(A)(7)(a), 722.100(A)(7)(b), or 722.100(A)(7)(c).

Informational Note: See *NFPA 72*-2025, *National Fire Alarm and Signaling Code*, 12.4.3 and 12.4.4 for additional information on fire alarm CI cable, fire-resistive cable systems, or electrical circuit protective systems used for fire alarm circuits to comply with the survivability requirements to maintain the circuit's electrical function during fire conditions for a defined period of time.

(a) *CI Cables.* CI cables of the types specified in 722.100(A)(1), 722.100(A)(2), 722.100(A)(3), 722.100(A)(4), and 722.100(A)(6) and used for survivability of critical circuits shall be marked with the additional classification using the suffix "CI." To maintain its listed fire-resistive rating, CI cable shall only be installed in free air in accordance with 722.180(B). CI cables shall only be permitted to be installed in a raceway where specifically listed and marked as part of a fire-resistive cable system as covered in 722.100(A)(7)(b).

Informational Note: See UL 2196, *Fire Test for Circuit Integrity of Fire-Resistive Power, Instrumentation, Control and Data Cables*, and UL 1425, *Cables for Non–Power-Limited Fire-Alarm Circuits*, for information on establishing a rating for CI cable. The *UL Guide Information for Nonpower-limited Fire Alarm Circuits (HNHT)* contains information to identify the cable and its installation limitations to maintain the fire-resistive rating.

(b) *Fire-Resistive Cables.* Fire-resistive cables of the types specified in 722.100(A)(1), 722.100(A)(2), 722.100(A)(3), 722.100(A)(4), 722.100(A)(6), and 722.100(A)(7)(a) that are part of a fire-resistive cable system shall be identified with the system identifier and hourly rating marked on the protectant or the smallest unit container and installed in accordance with the listing of the system.

Informational Note: See UL 2196, *Fire Test for Circuit Integrity of Fire-Resistive Power, Instrumentation, Control and Data Cables*, for information on establishing a rating for a fire-resistive cable system. The *UL Guide Information for Electrical Circuit Integrity Systems (FHIT)* contains information to identify the system and its installation limitations to maintain a minimum fire-resistive rating.

(c) *Electrical Circuit Protective System.* Protectants for cables of the types specified in 722.100(A)(1), 722.100(A)(2), 722.100(A)(3), 722.100(A)(4), and 722.100(A)(6) that are part of an electrical circuit protective system shall be identified with the protective system identifier and hourly rating marked on the protectant or the smallest unit container and installed in accordance with the listing of the protective system.

Informational Note: See UL 1724, *Fire Tests for Electrical Circuit Protective Systems*, for information on establishing a rating for an electrical circuit protective system. The *UL Guide Information for Electrical Circuit Integrity Systems (FHIT)* contains information to identify the system and its installation limitations to maintain the fire-resistive rating.

(8) Class 3 Single Conductors.

Class 3 single conductors used as other wiring within buildings shall be listed Type CL3 and shall not be smaller than 18 AWG.

Informational Note: See ANSI/UL 1685-2010, *Standard for Safety for Vertical-Tray Fire-Propagation and Smoke-Release Test for Electrical and Optical-Fiber Cables*, for the UL Flame Exposure, Vertical Tray Flame Test that is used to determine resistance to the spread of fire when cables do not spread fire to the top of the tray. The smoke measurements in the test method are not applicable. See CSA C22.2 No. 0.3-M-2001, *Test Methods for Electrical Wires and Cables*, for the CSA Vertical Flame Test — cables in cable trays that can also be used to define *resistant to the spread of fire* when the damage (char length) does not exceed 1.5 m (4 ft 11 in.).

(9) Limited Power (LP) Cable.

Class 2 and Class 3 LP cables shall be listed as suitable for carrying power and data up to a specified current limit for each conductor without exceeding the temperature rating of the cable. The cables shall be marked with the suffix "-LP (XXA)" where XXA designates the current limit in amperes per conductor.

Informational Note: An example of the marking on 23 AWG, 4-pair, Class 2 cable rated 75°C (167°F) with an LP current rating of 0.6 amperes per conductor is "CL2-LP (0.6A) 75°C 23 AWG 4-pair."

(10) Under-Carpet Cables.

Under-carpet cable shall be listed as suitable for use under carpet, floor covering, modular tiles, and planks.

Informational Note: See UL 444, *Standard for Safety for Communications Cables*, for the compressive loading test used to determine the suitability of cable for under-carpet use.

(11) Wet Locations.

Cable used in a wet location shall be listed for use in wet locations and be marked "wet" or "wet location" or have a moisture-impervious metal sheath.

(12) Field-Assembled Optical Fiber Cables.

Field-assembled optical fiber cable shall comply with 722.100(A)(12)(a) through 722.100(A)(12)(d).

(1) The specific combination of jacket and optical fibers intended to be installed as a field-assembled optical fiber cable shall be one of the types in 722.100(A)(1), 722.100(A)(2), or 722.100(A)(3) and shall be marked in accordance with Table 722.102(A).

(2) The jacket of a field-assembled optical fiber cable shall have a surface marking indicating the specific optical fibers with which it is identified for use.

(3) The optical fibers shall have a permanent marking, such as a marker tape, indicating the jacket with which they are identified for use.

(4) The jacket without fibers shall meet the listing requirements for communications raceways in 722.110 and 722.111 in accordance with the cable marking.

(13) Cables Containing Optical Fibers.

Composite optical fiber cables shall be listed as electrical cables based on the type of electrical conductors.

(14) Class 2 and Class 3 Cable Voltage and Temperature Ratings.

Class 2 cables shall have a voltage rating of not less than 150 volts. Class 3 cables shall have a voltage rating of not less than 300 volts. Class 2 and Class 3 cables shall have a temperature rating of not less than 60°C (140°F).

(15) Power-Limited Fire Alarm (PLFA) Cables.

PFLA cables shall comply with 722.100(A)(15)(a) through 722.100(A)(15)(d) .

(1) Conductors for cables, other than coaxial cables, shall be solid or stranded copper. Coaxial cables shall be permitted to use 30 percent conductivity copper-covered steel center conductor wire.

(2) The size of conductors in a multiconductor cable shall not be smaller than 26 AWG. Single conductors shall not be smaller than 18 AWG. Conductors of 26 AWG shall be permitted only where spliced with a connector listed as suitable for 26 AWG to 24 AWG or larger conductors that are terminated on equipment or where the 26 AWG conductors are terminated on equipment listed as suitable for 26 AWG conductors.

(3) Cables shall have a voltage rating of not less than 300 volts.

(4) Cables shall have a temperature rating of not less than 60°C (140°F).

(16) Class 4 Cable Construction.

(a) *Sizes.* Conductors of sizes not smaller than 24 AWG shall be permitted to be used.

(b) *Insulation.* Insulation on conductors shall be rated not less than 450 volts dc.

(c) *Voltage Rating.* Cables shall have a voltage rating of not less than 450 volts dc. Voltage ratings shall not be marked on the cables.

(d) *Temperature Rating.* Cables shall have a temperature rating of not less than 60°C (140°F).

Additional Proposed Changes

File Name	Description	Approved
Limited_Energy_Roster-2026_2nd_Draft.pdf	Limited-Energy Task Group Roster-2nd Draft	

Statement of Problem and Substantiation for Public Comment

This public comment is submitted on behalf of the Limited-Energy Task Group (see attached roster) to delete Informational Note No.4 of 722.100(A) as it has been relocated to section 722.150 with the other class 4 cable requirements.

Related Public Comments for This Document

Related Comment	Relationship
Public Comment No. 1429-NFPA 70-2024 [Section No. 722.100(A)(16)]	PC deleting section 722.100(A)(16) as it is relocated to 722.150.
Public Comment No. 1430-NFPA 70-2024 [Section No. 726.139]	PC deleting section 726.139 as these requirements are relocated to 722.150-152.
Public Comment No. 1431-NFPA 70-2024 [Section No. 722.150(A)]	PC revising 722.150(A) and adding info note from 722.100(A).
Public Comment No. 1432-NFPA 70-2024 [New Section after 722.150(C)]	PC creating section 722.151 to house the requirements deleted from 722.100(A)(16).
Public Comment No. 1434-NFPA 70-2024 [New Section after 722.150(C)]	PC adding new section 722.152 to house class 4 cable requirements from 726.139.
Public Comment No. 1429-NFPA 70-2024 [Section No. 722.100(A)(16)]	
Public Comment No. 1430-NFPA 70-2024 [Section No. 726.139]	
Public Comment No. 1432-NFPA 70-2024 [New Section after 722.150(C)]	
Public Comment No. 1434-NFPA 70-2024 [New Section after 722.150(C)]	

Related Item

- FCR-238

Submitter Information Verification

Submitter Full Name: Kyle Krueger
Organization: NECA
Affiliation: NECA
Street Address:
City:
State:
Zip:

Submittal Date: Thu Aug 22 15:45:18 EDT 2024
Committee: NEC-P03

Limited Energy Task Group [2nd Draft]					
No.	First Name	Last Name	Class.	Organization	Other Committees
1	Kyle	Krueger	[I/M]	NECA	NEC-Correlating Comittee CMP 3 NFPA 72-Correlating Committee
2	Ernie	Gallo	[U/T]	NEBScore	
3	Derrick	Atkins	[L]	Minneapolis Electrical JA	NEC-Correlating Committee CMP 5
4	Anthony	Tassone	[R/T]	UL Solutions	CMP 3 CMP 16
5	Chad	Jones	[M]	Cisco	CMP 3
6	Sam	Rokowski	[I/M]	Maddox Inc.	CMP 3
7	George	Bish	[M]	Amazon/Ring Protect Inc	CMP 16
8	Trevor	Bowmer	[U]	Telecom Consulting	NEC Correlating Committee CMP 16
9	Ronald	Tellas	[M]	CCCA	CMP 3 CMP 16
10	Tim	Mikloiche	[E]	IAEI	CMP 3
11	Ryan	Jackosn	[M]	Steel Tube Industry	CMP 3
12	Diana	Lettkeman	[M]	Dish	CMP 16
13	John	Kacperski	[L]	IBEW	CMP 16

Public Comment No. 931-NFPA 70-2024 [Section No. 722.100(A)(1)]

(1) Plenum Cable.

Plenum cable shall be listed as suitable for use in ducts, plenums, and other space for environmental air and shall be listed as having adequate fire-resistant and low-smoke producing characteristics. Plenum cable types shall be identified in Table 722.102(A).

~~Informational Note: See NFPA 262-2023, *Standard Method of Test for Flame Travel and Smoke of Wires and Cables for Use in Air-Handling Spaces* , for the test method used to determine that a cable is low-smoke producing and fire resistant, exhibiting a maximum peak optical density of 0.50 or less, an average optical density of 0.15 or less, and a maximum flame spread distance of 1.52 m (5 ft) or less.~~

Additional Proposed Changes

File Name	Description	Approved
Limited_Energy_Roster-2026_2nd_Draft.pdf	Limited-Energy Task Group Roster-2nd Draft	

Statement of Problem and Substantiation for Public Comment

This Public comment is submitted on behalf of the Limited-Energy Task Group (see attached roster) to delete the Informational Note in section 722.100(A)(1) for reference to NFPA 262 as it is now located in new 722.2 and 720.22(C). See companion:
PC-924 & 1303

Related Public Comments for This Document

Related Comment	Relationship
Public Comment No. 924-NFPA 70-2024 [New Section after 722.1]	New listing section 722.2 which is the new location for this deleted info note
Public Comment No. 1303-NFPA 70-2024 [Section No. 720.22(C) [Excluding any Sub-Sections]]	Addition of this same info note in 720.22(C)
Public Comment No. 924-NFPA 70-2024 [New Section after 722.1]	

Related Item

- FCR-238

Submitter Information Verification

Submitter Full Name: Kyle Krueger
Organization: NECA
Affiliation: NECA
Street Address:
City:
State:
Zip:

Submittal Date: Wed Aug 07 17:13:41 EDT 2024
Committee: NEC-P03

Limited Energy Task Group [2nd Draft]					
No.	First Name	Last Name	Class.	Organization	Other Committees
1	Kyle	Krueger	[I/M]	NECA	NEC-Correlating Comittee CMP 3 NFPA 72-Correlating Committee
2	Ernie	Gallo	[U/T]	NEBScore	
3	Derrick	Atkins	[L]	Minneapolis Electrical JA	NEC-Correlating Committee CMP 5
4	Anthony	Tassone	[R/T]	UL Solutions	CMP 3 CMP 16
5	Chad	Jones	[M]	Cisco	CMP 3
6	Sam	Rokowski	[I/M]	Maddox Inc.	CMP 3
7	George	Bish	[M]	Amazon/Ring Protect Inc	CMP 16
8	Trevor	Bowmer	[U]	Telecom Consulting	NEC Correlating Committee CMP 16
9	Ronald	Tellas	[M]	CCCA	CMP 3 CMP 16
10	Tim	Mikloiche	[E]	IAEI	CMP 3
11	Ryan	Jackosn	[M]	Steel Tube Industry	CMP 3
12	Diana	Lettkeman	[M]	Dish	CMP 16
13	John	Kacperski	[L]	IBEW	CMP 16

Public Comment No. 934-NFPA 70-2024 [Section No. 722.100(A)(1)]

~~(1) Plenum Cable.~~

~~Plenum cable shall be listed as suitable for use in ducts, plenums, and other space for environmental air and shall be listed as having adequate fire-resistant and low-smoke producing characteristics. Plenum cable types shall be identified in Table 722.102(A).~~

Informational Note: See NFPA 262-2023, *Standard Method of Test for Flame Travel and Smoke of Wires and Cables for Use in Air-Handling Spaces*, for the test method used to determine that a cable is low-smoke producing and fire resistant, exhibiting a maximum peak optical density of 0.50 or less, an average optical density of 0.15 or less, and a maximum flame spread distance of 1.52 m (5 ft) or less.

Additional Proposed Changes

File Name	Description	Approved
Limited_Energy_Roster-2026_2nd_Draft.pdf	Limited-Energy Task Group Roster-2nd Draft	

Statement of Problem and Substantiation for Public Comment

This public comment is submitted on behalf of the Limited-Energy Task Group (see attached roster) to delete section 722.100(A)(1) as this listing requirement for plenum rated cable is covered by the general listing requirement in new 722.2 as well as the installation and application requirements in Part III of Article 722. Additionally, there are plenum requirements in section 720.22(C).

Related Public Comments for This Document

Related Comment	Relationship
Public Comment No. 924-NFPA 70-2024 [New Section after 722.1]	PC to create new listing section 722.2
Public Comment No. 924-NFPA 70-2024 [New Section after 722.1]	

Related Item

- FCR-238

Submitter Information Verification

Submitter Full Name: Kyle Krueger
Organization: NECA
Affiliation: NECA
Street Address:
City:
State:
Zip:

Submittal Date: Wed Aug 07 17:18:18 EDT 2024
Committee: NEC-P03

Limited Energy Task Group [2nd Draft]					
No.	First Name	Last Name	Class.	Organization	Other Committees
1	Kyle	Krueger	[I/M]	NECA	NEC-Correlating Comittee CMP 3 NFPA 72-Correlating Committee
2	Ernie	Gallo	[U/T]	NEBScore	
3	Derrick	Atkins	[L]	Minneapolis Electrical JA	NEC-Correlating Committee CMP 5
4	Anthony	Tassone	[R/T]	UL Solutions	CMP 3 CMP 16
5	Chad	Jones	[M]	Cisco	CMP 3
6	Sam	Rokowski	[I/M]	Maddox Inc.	CMP 3
7	George	Bish	[M]	Amazon/Ring Protect Inc	CMP 16
8	Trevor	Bowmer	[U]	Telecom Consulting	NEC Correlating Committee CMP 16
9	Ronald	Tellas	[M]	CCCA	CMP 3 CMP 16
10	Tim	Mikloiche	[E]	IAEI	CMP 3
11	Ryan	Jackosn	[M]	Steel Tube Industry	CMP 3
12	Diana	Lettkeman	[M]	Dish	CMP 16
13	John	Kacperski	[L]	IBEW	CMP 16

Public Comment No. 926-NFPA 70-2024 [Section No. 722.100(A)(2)]

~~**(2)** Riser Cable.~~

~~Riser cable shall be listed as suitable for use in a vertical run in a shaft or from floor to floor and shall be listed as having fire-resistant characteristics capable of preventing the carrying of fire from floor to floor.~~

~~Informational Note: See ANSI/UL 1666-2012, *Test for Flame Propagation Height of Electrical and Optical-Fiber Cable Installed Vertically in Shafts* , for the cable requirements defining fire-resistant characteristics capable of preventing the carrying of fire from floor to floor.~~

Additional Proposed Changes

File Name	Description	Approved
Limited_Energy_Roster-2026_2nd_Draft.pdf	Limited-Energy Task Group Roster-2nd Draft	

Statement of Problem and Substantiation for Public Comment

This Public comment is submitted on behalf of the Limited-Energy Task Group (See attached roster) to acomplish the following:
(1) Delete section 722.100(A)(2) as it is adaquately covered by NEW 722.2(1)-(2) and Section/Table 722.120.
(2) Delete the Informational Note to section 722.100(A)(2) as it has been relocated to section 722.2 in companion PC-924.

Related Public Comments for This Document

Related Comment	Relationship
Public Comment No. 924-NFPA 70-2024 [New Section after 722.1]	Relocate information note to new section 722.2
Public Comment No. 924-NFPA 70-2024 [New Section after 722.1]	

Related Item

- FCR-238

Submitter Information Verification

Submitter Full Name: Kyle Krueger
Organization: NECA
Affiliation: NECA
Street Address:
City:
State:
Zip:

Submittal Date: Wed Aug 07 17:06:37 EDT 2024
Committee: NEC-P03

Limited Energy Task Group [2nd Draft]					
No.	First Name	Last Name	Class.	Organization	Other Committees
1	Kyle	Krueger	[I/M]	NECA	NEC-Correlating Comittee CMP 3 NFPA 72-Correlating Committee
2	Ernie	Gallo	[U/T]	NEBScore	
3	Derrick	Atkins	[L]	Minneapolis Electrical JA	NEC-Correlating Committee CMP 5
4	Anthony	Tassone	[R/T]	UL Solutions	CMP 3 CMP 16
5	Chad	Jones	[M]	Cisco	CMP 3
6	Sam	Rokowski	[I/M]	Maddox Inc.	CMP 3
7	George	Bish	[M]	Amazon/Ring Protect Inc	CMP 16
8	Trevor	Bowmer	[U]	Telecom Consulting	NEC Correlating Committee CMP 16
9	Ronald	Tellas	[M]	CCCA	CMP 3 CMP 16
10	Tim	Mikloiche	[E]	IAEI	CMP 3
11	Ryan	Jackosn	[M]	Steel Tube Industry	CMP 3
12	Diana	Lettkeman	[M]	Dish	CMP 16
13	John	Kacperski	[L]	IBEW	CMP 16

Public Comment No. 929-NFPA 70-2024 [Section No. 722.100(A)(3)]

~~**(3)** General-Purpose Cable.~~

~~General-purpose cable shall be listed as resistant to the spread of fire and as suitable for general-purpose use, except for use in risers, ducts, plenums, and other space used for environmental air.~~

~~Informational Note: See UL 2556, *Wire and Cable Test Methods* , for defining *resistant to the spread of fire* . One method is to demonstrate that the cables do not spread fire to the top of the tray in the UL Flame Exposure, Vertical Tray Flame Test. The smoke measurements in the test method are not applicable. A method of defining *resistant to the spread of fire* is for the damage (char length) not to exceed 1.5 m (4 ft 11 in.) when performing the FT4 Vertical Flame Test.~~

Additional Proposed Changes

File Name	Description	Approved
Limited_Energy_Roster-2026_2nd_Draft.pdf	Limited-Energy Task Group Roster-2nd Draft	

Statement of Problem and Substantiation for Public Comment

This Public comment is submitted on behalf of the Limited-Energy Task Group (see attached roster) to
(1) Delete section 722.100(A)(3) as it is covered by 722.2(1)-(2) and in section/table 722.120(A).
(2) Delete the Informational Note to section 722.100(A)(3) as it has been relocated to 722.2(A). See companion PC-924.

Related Public Comments for This Document

Related Comment	Relationship
Public Comment No. 924-NFPA 70-2024 [New Section after 722.1]	PC to relocate info note to new section 722.2
Public Comment No. 924-NFPA 70-2024 [New Section after 722.1]	

Related Item

- FCR-238

Submitter Information Verification

Submitter Full Name: Kyle Krueger
Organization: NECA
Affiliation: NECA
Street Address:
City:
State:
Zip:

Submittal Date: Wed Aug 07 17:10:07 EDT 2024
Committee: NEC-P03

Limited Energy Task Group [2nd Draft]					
No.	First Name	Last Name	Class.	Organization	Other Committees
1	Kyle	Krueger	[I/M]	NECA	NEC-Correlating Comittee CMP 3 NFPA 72-Correlating Committee
2	Ernie	Gallo	[U/T]	NEBScore	
3	Derrick	Atkins	[L]	Minneapolis Electrical JA	NEC-Correlating Committee CMP 5
4	Anthony	Tassone	[R/T]	UL Solutions	CMP 3 CMP 16
5	Chad	Jones	[M]	Cisco	CMP 3
6	Sam	Rokowski	[I/M]	Maddox Inc.	CMP 3
7	George	Bish	[M]	Amazon/Ring Protect Inc	CMP 16
8	Trevor	Bowmer	[U]	Telecom Consulting	NEC Correlating Committee CMP 16
9	Ronald	Tellas	[M]	CCCA	CMP 3 CMP 16
10	Tim	Mikloiche	[E]	IAEI	CMP 3
11	Ryan	Jackosn	[M]	Steel Tube Industry	CMP 3
12	Diana	Lettkeman	[M]	Dish	CMP 16
13	John	Kacperski	[L]	IBEW	CMP 16

Public Comment No. 932-NFPA 70-2024 [Section No. 722.100(A)(4)]

~~**(4)** Alternative General-Purpose Cable.~~

~~Alternative general-purpose optical fiber cable shall be listed as suitable for general-purpose use, with the exception of risers and plenums, and shall also be resistant to the spread of fire.~~

~~Informational Note: See CSA C22.2 No. 0.3-M-2001, *Test Methods for Electrical Wires and Cables* , for the CSA Vertical Flame Test — cables in cable trays, that can also be used to define *resistant to the spread of fire* when the damage (char length) does not exceed 1.5 m (4 ft 11 in.).~~

Additional Proposed Changes

File Name	Description	Approved
Limited_Energy_Roster-2026_2nd_Draft.pdf	Limited-Energy Task Group Roster-2nd Draft	

Statement of Problem and Substantiation for Public Comment

This Public comment is submitted on behalf of the Limited-Energy Task Group (see attached roster) to
(1) Delete section 722.100(A)(4) as it is covered by NEW 722.2(1)-(2) and Section/Table 722.160, 722.161.
(2) Delete the Informational Note to section 722.100(A)(4) as it has been relocated to section 722.2(A). See companion PC-924.

Related Public Comments for This Document

Related Comment	Relationship
Public Comment No. 924-NFPA 70-2024 [New Section after 722.1]	PC to relocate info note to new section 722.2
Public Comment No. 924-NFPA 70-2024 [New Section after 722.1]	

Related Item

- FCR-238

Submitter Information Verification

Submitter Full Name: Kyle Krueger
Organization: NECA
Affiliation: NECA
Street Address:
City:
State:
Zip:

Submittal Date: Wed Aug 07 17:15:24 EDT 2024
Committee: NEC-P03

Limited Energy Task Group [2nd Draft]					
No.	First Name	Last Name	Class.	Organization	Other Committees
1	Kyle	Krueger	[I/M]	NECA	NEC-Correlating Comittee CMP 3 NFPA 72-Correlating Committee
2	Ernie	Gallo	[U/T]	NEBScore	
3	Derrick	Atkins	[L]	Minneapolis Electrical JA	NEC-Correlating Committee CMP 5
4	Anthony	Tassone	[R/T]	UL Solutions	CMP 3 CMP 16
5	Chad	Jones	[M]	Cisco	CMP 3
6	Sam	Rokowski	[I/M]	Maddox Inc.	CMP 3
7	George	Bish	[M]	Amazon/Ring Protect Inc	CMP 16
8	Trevor	Bowmer	[U]	Telecom Consulting	NEC Correlating Committee CMP 16
9	Ronald	Tellas	[M]	CCCA	CMP 3 CMP 16
10	Tim	Mikloiche	[E]	IAEI	CMP 3
11	Ryan	Jackosn	[M]	Steel Tube Industry	CMP 3
12	Diana	Lettkeman	[M]	Dish	CMP 16
13	John	Kacperski	[L]	IBEW	CMP 16

Public Comment No. 930-NFPA 70-2024 [Section No. 722.100(A)(5)]

~~**(5)** Limited-Use Cable.~~

~~Limited-use cable shall be listed as suitable for use in dwellings and raceways and shall be listed as resistant to flame spread.~~

~~Informational Note: See ANSI/UL 2556, *Standard for Wire and Cable Test Methods* , for one method of determining that cable is resistant to flame spread by testing the cable to the FV-2/VW-1 test.~~

Additional Proposed Changes

File Name	Description	Approved
Limited_Energy_Roster-2026_2nd_Draft.pdf	Limited-Energy Task Group Roster-2nd Draft	

Statement of Problem and Substantiation for Public Comment

This Public comment is submitted on behalf of the Limited-Energy Task Group (see attached roster) to:
(1) Delete section 722.100(A)(5) as it is covered by 722.2(1)-(2) and Section/Table 722.120.
(2) Delete the Informational Note to section 722.100(A)(5) as it has been relocated to NEW section 722.2(A). See companion PC-924.

Related Public Comments for This Document

Related Comment	Relationship
Public Comment No. 924-NFPA 70-2024 [New Section after 722.1]	PC to relocate info note to new section 722.2
Public Comment No. 924-NFPA 70-2024 [New Section after 722.1]	

Related Item

- FCR-238

Submitter Information Verification

Submitter Full Name: Kyle Krueger
Organization: NECA
Affiliation: NECA
Street Address:
City:
State:
Zip:

Submittal Date: Wed Aug 07 17:11:56 EDT 2024
Committee: NEC-P03

Limited Energy Task Group [2nd Draft]					
No.	First Name	Last Name	Class.	Organization	Other Committees
1	Kyle	Krueger	[I/M]	NECA	NEC-Correlating Comittee CMP 3 NFPA 72-Correlating Committee
2	Ernie	Gallo	[U/T]	NEBScore	
3	Derrick	Atkins	[L]	Minneapolis Electrical JA	NEC-Correlating Committee CMP 5
4	Anthony	Tassone	[R/T]	UL Solutions	CMP 3 CMP 16
5	Chad	Jones	[M]	Cisco	CMP 3
6	Sam	Rokowski	[I/M]	Maddox Inc.	CMP 3
7	George	Bish	[M]	Amazon/Ring Protect Inc	CMP 16
8	Trevor	Bowmer	[U]	Telecom Consulting	NEC Correlating Committee CMP 16
9	Ronald	Tellas	[M]	CCCA	CMP 3 CMP 16
10	Tim	Mikloiche	[E]	IAEI	CMP 3
11	Ryan	Jackosn	[M]	Steel Tube Industry	CMP 3
12	Diana	Lettkeman	[M]	Dish	CMP 16
13	John	Kacperski	[L]	IBEW	CMP 16

Public Comment No. 927-NFPA 70-2024 [Section No. 722.100(A)(6)]

~~**(6)** Type PLTC.~~

~~Type PLTC nonmetallic-sheathed, power-limited tray cable shall be listed as being suitable for cable trays, resistant to the spread of fire, and sunlight- and moisture-resistant. Type PLTC cable used in a wet location shall be listed for use in wet locations and marked "wet" or "wet location."~~

~~Informational Note: See ANSI/UL 1685-2010, *Standard for Safety for Vertical-Tray Fire-Propagation and Smoke-Release Test for Electrical and Optical-Fiber Cables* , for the UL Flame Exposure, Vertical Tray Flame Test that is used to determine resistance to the spread of fire when cables do not spread fire to the top of the tray. The smoke measurements in the test method are not applicable. See CSA C22.2 No. 0.3-M-2001, *Test Methods for Electrical Wires and Cables* , for the CSA Vertical Flame Test — cables in cable trays that can also be used to define *resistant to the spread of fire* when the damage (char length) does not exceed 1.5 m (4 ft 11 in.).~~

Additional Proposed Changes

File Name	Description	Approved
Limited_Energy_Roster-2026_2nd_Draft.pdf	Limited-Energy TasK Group Roster - 2md Draft	

Statement of Problem and Substantiation for Public Comment

This Public comment is submitted on behalf of the Limited-Energy Task Group (see attached roster) to:
(1) Delete section 722.100(A)(6) as it is covered by new section 722.2 and sections 722.120 - 722.123.
(2) Delete the Informational Note to section 722.100(A)(6) as it is now located in the new listing requirements section 722.2. See companion PC-924.

Related Public Comments for This Document

Related Comment	Relationship
Public Comment No. 924-NFPA 70-2024 [New Section after 722.1]	PC to relocate info note to new section 722.2
Public Comment No. 924-NFPA 70-2024 [New Section after 722.1]	

Related Item

- FCR-238

Submitter Information Verification

Submitter Full Name: Kyle Krueger
Organization: NECA
Affiliation: NECA
Street Address:
City:
State:
Zip:

Submittal Date: Wed Aug 07 17:07:44 EDT 2024
Committee: NEC-P03

Limited Energy Task Group [2nd Draft]					
No.	First Name	Last Name	Class.	Organization	Other Committees
1	Kyle	Krueger	[I/M]	NECA	NEC-Correlating Comittee CMP 3 NFPA 72-Correlating Committee
2	Ernie	Gallo	[U/T]	NEBScore	
3	Derrick	Atkins	[L]	Minneapolis Electrical JA	NEC-Correlating Committee CMP 5
4	Anthony	Tassone	[R/T]	UL Solutions	CMP 3 CMP 16
5	Chad	Jones	[M]	Cisco	CMP 3
6	Sam	Rokowski	[I/M]	Maddox Inc.	CMP 3
7	George	Bish	[M]	Amazon/Ring Protect Inc	CMP 16
8	Trevor	Bowmer	[U]	Telecom Consulting	NEC Correlating Committee CMP 16
9	Ronald	Tellas	[M]	CCCA	CMP 3 CMP 16
10	Tim	Mikloiche	[E]	IAEI	CMP 3
11	Ryan	Jackosn	[M]	Steel Tube Industry	CMP 3
12	Diana	Lettkeman	[M]	Dish	CMP 16
13	John	Kacperski	[L]	IBEW	CMP 16

Public Comment No. 1435-NFPA 70-2024 [Section No. 722.100(A)(7)]

~~**(7)** Circuit Integrity (CI) Cable, Fire-Resistive Cable System, or Electrical Circuit Protective System.~~

~~Cables that are used for survivability of critical circuits under fire conditions shall comply with 722.100(A)(7)(a) , 722.100(A)(7)(b) , or 722.100(A)(7)(c) :~~

~~Informational Note: See *NFPA 72* -2025, *National Fire Alarm and Signaling Code* , 12.4.3 and 12.4.4 for additional information on fire alarm CI cable, fire-resistive cable systems, or electrical circuit protective systems used for fire alarm circuits to comply with the survivability requirements to maintain the circuit's electrical function during fire conditions for a defined period of time.~~

(a) ~~*CI Cables.* CI cables of the types specified in 722.100(A)(1) , 722.100(A)(2) , 722.100(A)(3) , 722.100(A)(4) , and 722.100(A)(6) and used for survivability of critical circuits shall be marked with the additional classification using the suffix "CI." To maintain its listed fire-resistive rating, CI cable shall only be installed in free air in accordance with 722.180(B) . CI cables shall only be permitted to be installed in a raceway where specifically listed and marked as part of a fire-resistive cable system as covered in 722.100(A)(7)(b) :~~

~~Informational Note: See UL 2196, *Fire Test for Circuit Integrity of Fire-Resistive Power, Instrumentation, Control and Data Cables* , and UL 1425, *Cables for Non–Power-Limited Fire-Alarm Circuits* , for information on establishing a rating for CI cable. The *UL Guide Information for Nonpower-limited Fire Alarm Circuits (FNHT)* contains information to identify the cable and its installation limitations to maintain the fire-resistive rating.~~

(b) ~~*Fire-Resistive Cables.* Fire-resistive cables of the types specified in 722.100(A)(1) , 722.100(A)(2) , 722.100(A)(3) , 722.100(A)(4) , 722.100(A)(6) , and 722.100(A)(7)(a) that are part of a fire-resistive cable system shall be identified with the system identifier and hourly rating marked on the protectant or the smallest unit container and installed in accordance with the listing of the system.~~

~~Informational Note: See UL 2196, *Fire Test for Circuit Integrity of Fire-Resistive Power, Instrumentation, Control and Data Cables* , for information on establishing a rating for a fire-resistive cable system. The *UL Guide Information for Electrical Circuit Integrity Systems (FHIT)* contains information to identify the system and its installation limitations to maintain a minimum fire-resistive rating.~~

(c) ~~*Electrical Circuit Protective System.* Protectants for cables of the types specified in 722.100(A)(1) , 722.100(A)(2) , 722.100(A)(3) , 722.100(A)(4) , and 722.100(A)(6) that are part of an electrical circuit protective system shall be identified with the protective system identifier and hourly rating marked on the protectant or the smallest unit container and installed in accordance with the listing of the protective system.~~

~~Informational Note: See UL 1724, *Fire Tests for Electrical Circuit Protective Systems* , for information on establishing a rating for an electrical circuit protective system. The *UL Guide Information for Electrical Circuit Integrity Systems (FHIT)* contains information to identify the system and its installation limitations to maintain the fire-resistive rating.~~

Additional Proposed Changes

File Name	Description	Approved
Limited_Energy_Roster-2026_2nd_Draft.pdf	Limited-Energy Task Group Roster-2nd Draft	

Statement of Problem and Substantiation for Public Comment

This Public comment is submitted on behalf of the Limited-Energy Task Group (see attached roster) to:
(1) Delete and relocate the requirements in 722.100(A)(7) for Type CI Cables to section 722.180(B) with the rest of the Type CI Cable requirements.
(2) Delete and relocate the Informational Note to 722.100(A)(7) relocated to 722.180(A) for CI Cable.
(3) Delete and relocate section 722.100(A)(7)(a) and Informational Note to section 722.180(B)&(D).
(4) Delete and relocate section 722.100(A)(7)(b) and Informational Note to section 722.180(B)&(D).
(5) Delete section 722.100(A)(7)(c) and Informational Note and relocate to section 722.180(B)&(D) where the rest of Electrical Circuit Protective Systems are covered.

Related Public Comments for This Document

Related Comment	Relationship
Public Comment No. 1436-NFPA 70-2024 [Section No. 722.180]	PC to delete section 722.100(A)(7) as these requirements are relocated by PC-1436 to 722.180
Public Comment No. 1436-NFPA 70-2024 [Section No. 722.180]	

Related Item

- FCR-238

Submitter Information Verification

Submitter Full Name: Kyle Krueger
Organization: NECA
Affiliation: NECA
Street Address:
City:
State:
Zip:

Submittal Date: Thu Aug 22 16:26:10 EDT 2024
Committee: NEC-P03

Limited Energy Task Group [2nd Draft]					
No.	First Name	Last Name	Class.	Organization	Other Committees
1	Kyle	Krueger	[I/M]	NECA	NEC-Correlating Comittee CMP 3 NFPA 72-Correlating Committee
2	Ernie	Gallo	[U/T]	NEBScore	
3	Derrick	Atkins	[L]	Minneapolis Electrical JA	NEC-Correlating Committee CMP 5
4	Anthony	Tassone	[R/T]	UL Solutions	CMP 3 CMP 16
5	Chad	Jones	[M]	Cisco	CMP 3
6	Sam	Rokowski	[I/M]	Maddox Inc.	CMP 3
7	George	Bish	[M]	Amazon/Ring Protect Inc	CMP 16
8	Trevor	Bowmer	[U]	Telecom Consulting	NEC Correlating Committee CMP 16
9	Ronald	Tellas	[M]	CCCA	CMP 3 CMP 16
10	Tim	Mikloiche	[E]	IAEI	CMP 3
11	Ryan	Jackosn	[M]	Steel Tube Industry	CMP 3
12	Diana	Lettkeman	[M]	Dish	CMP 16
13	John	Kacperski	[L]	IBEW	CMP 16

Public Comment No. 1437-NFPA 70-2024 [Section No. 722.100(A)(8)]

~~**(8)** Class 3 Single Conductors.~~

~~Class 3 single conductors used as other wiring within buildings shall be listed Type CL3 and shall not be smaller than 18 AWG.~~

Informational Note: See ANSI/UL 1685-2010, *Standard for Safety for Vertical-Tray Fire-Propagation and Smoke-Release Test for Electrical and Optical-Fiber Cables* , for the UL Flame Exposure, Vertical Tray Flame Test that is used to determine resistance to the spread of fire when cables do not spread fire to the top of the tray. The smoke measurements in the test method are not applicable. See CSA C22.2 No. 0.3-M-2001, *Test Methods for Electrical Wires and Cables* , for the CSA Vertical Flame Test — cables in cable trays that can also be used to define *resistant to the spread of fire* when the damage (char length) does not exceed 1.5 m (4 ft 11 in.).

Additional Proposed Changes

File Name	Description	Approved
Limited_Energy_Roster-2026_2nd_Draft.pdf	Limited-Energy Task Group Roster-2nd Draft	

Statement of Problem and Substantiation for Public Comment

This Public comment is submitted on behalf of the Limited-Energy Task Group (see attached roster) to delete section 722.100(A)(8) and relocate the requirements to the appropriate location in 722.140(A)(4) where the rest of the Class 2 & 3 cable requirements reside.

Related Public Comments for This Document

Related Comment	Relationship
Public Comment No. 1438-NFPA 70-2024 [Section No. 722.100(A)(14)]	PC to delete section 722.100(A)(14)
Public Comment No. 1439-NFPA 70-2024 [Section No. 722.140(A)]	PC to relocate relocate 722.100(A)(8) and 722.100(A)(14) to section 722.140.
Public Comment No. 1438-NFPA 70-2024 [Section No. 722.100(A)(14)]	
Public Comment No. 1439-NFPA 70-2024 [Section No. 722.140(A)]	

Related Item

- FCR-238

Submitter Information Verification

Submitter Full Name: Kyle Krueger
Organization: NECA
Affiliation: NECA
Street Address:
City:
State:
Zip:

Submittal Date: Thu Aug 22 16:47:05 EDT 2024
Committee: NEC-P03

Limited Energy Task Group [2nd Draft]					
No.	First Name	Last Name	Class.	Organization	Other Committees
1	Kyle	Krueger	[I/M]	NECA	NEC-Correlating Comittee CMP 3 NFPA 72-Correlating Committee
2	Ernie	Gallo	[U/T]	NEBScore	
3	Derrick	Atkins	[L]	Minneapolis Electrical JA	NEC-Correlating Committee CMP 5
4	Anthony	Tassone	[R/T]	UL Solutions	CMP 3 CMP 16
5	Chad	Jones	[M]	Cisco	CMP 3
6	Sam	Rokowski	[I/M]	Maddox Inc.	CMP 3
7	George	Bish	[M]	Amazon/Ring Protect Inc	CMP 16
8	Trevor	Bowmer	[U]	Telecom Consulting	NEC Correlating Committee CMP 16
9	Ronald	Tellas	[M]	CCCA	CMP 3 CMP 16
10	Tim	Mikloiche	[E]	IAEI	CMP 3
11	Ryan	Jackosn	[M]	Steel Tube Industry	CMP 3
12	Diana	Lettkeman	[M]	Dish	CMP 16
13	John	Kacperski	[L]	IBEW	CMP 16

Public Comment No. 928-NFPA 70-2024 [Section No. 722.100(A)(8)]

(8) Class 3 Single Conductors.

Class 3 single conductors used as other wiring within buildings shall be listed Type CL3 and shall not be smaller than 18 AWG.

~~Informational Note: See ANSI/UL 1685-2010, *Standard for Safety for Vertical-Tray Fire-Propagation and Smoke-Release Test for Electrical and Optical-Fiber Cables* , for the UL Flame Exposure, Vertical Tray Flame Test that is used to determine resistance to the spread of fire when cables do not spread fire to the top of the tray. The smoke measurements in the test method are not applicable. See CSA C22.2 No. 0.3-M-2001, *Test Methods for Electrical Wires and Cables* , for the CSA Vertical Flame Test — cables in cable trays that can also be used to define *resistant to the spread of fire* when the damage (char length) does not exceed 1.5 m (4 ft 11 in.).~~

Additional Proposed Changes

File Name	Description	Approved
Limited_Energy_Roster-2026_2nd_Draft.pdf	Limited-Energy Task Group Roster-2nd Draft	

Statement of Problem and Substantiation for Public Comment

This Public comment is submitted on behalf of the Limited-Energy Task Group (see attached roster) to delete the Informational Note to section 722.100(A)(6) as it is now located in the new listing requirements section 722.2. See companion PC-924.

Related Public Comments for This Document

Related Comment	Relationship
Public Comment No. 924-NFPA 70-2024 [New Section after 722.1]	
Public Comment No. 924-NFPA 70-2024 [New Section after 722.1]	

Related Item

- FCR-238

Submitter Information Verification

Submitter Full Name: Kyle Krueger
Organization: NECA
Affiliation: NECA
Street Address:
City:
State:
Zip:

Submittal Date: Wed Aug 07 17:08:52 EDT 2024
Committee: NEC-P03

Limited Energy Task Group [2nd Draft]					
No.	First Name	Last Name	Class.	Organization	Other Committees
1	Kyle	Krueger	[I/M]	NECA	NEC-Correlating Comittee CMP 3 NFPA 72-Correlating Committee
2	Ernie	Gallo	[U/T]	NEBScore	
3	Derrick	Atkins	[L]	Minneapolis Electrical JA	NEC-Correlating Committee CMP 5
4	Anthony	Tassone	[R/T]	UL Solutions	CMP 3 CMP 16
5	Chad	Jones	[M]	Cisco	CMP 3
6	Sam	Rokowski	[I/M]	Maddox Inc.	CMP 3
7	George	Bish	[M]	Amazon/Ring Protect Inc	CMP 16
8	Trevor	Bowmer	[U]	Telecom Consulting	NEC Correlating Committee CMP 16
9	Ronald	Tellas	[M]	CCCA	CMP 3 CMP 16
10	Tim	Mikloiche	[E]	IAEI	CMP 3
11	Ryan	Jackosn	[M]	Steel Tube Industry	CMP 3
12	Diana	Lettkeman	[M]	Dish	CMP 16
13	John	Kacperski	[L]	IBEW	CMP 16

Public Comment No. 1496-NFPA 70-2024 [Section No. 722.100(A)(9)]

~~**(9)** Limited Power (LP) Cable.~~

~~Class 2 and Class 3 LP cables shall be listed as suitable for carrying power and data up to a specified current limit for each conductor without exceeding the temperature rating of the cable. The cables shall be marked with the suffix "-LP (XXA)" where XXA designates the current limit in amperes per conductor.~~

~~Informational Note: An example of the marking on 23 AWG, 4-pair, Class 2 cable rated 75°C (167°F) with an LP current rating of 0.6 amperes per conductor is "CL2-LP (0.6A) 75°C 23 AWG 4-pair."~~

Additional Proposed Changes

File Name	Description	Approved
Limited_Energy_Roster-2026_2nd_Draft.pdf	Limited-Energy Task Group Roster-2nd Draft	

Statement of Problem and Substantiation for Public Comment

This Public comment is submitted on behalf of the Limited-Energy Task Group (see attached roster) to delete section 722.100(A)(9) and associated Informational Note as they are both adequately covered in Section 722.140(B)(1)-(2).

Related Item

- FCR-238

Submitter Information Verification

Submitter Full Name: Kyle Krueger
Organization: NECA
Affiliation: NECA
Street Address:
City:
State:
Zip:

Submittal Date: Fri Aug 23 15:34:50 EDT 2024
Committee: NEC-P03

Limited Energy Task Group [2nd Draft]					
No.	First Name	Last Name	Class.	Organization	Other Committees
1	Kyle	Krueger	[I/M]	NECA	NEC-Correlating Comittee CMP 3 NFPA 72-Correlating Committee
2	Ernie	Gallo	[U/T]	NEBScore	
3	Derrick	Atkins	[L]	Minneapolis Electrical JA	NEC-Correlating Committee CMP 5
4	Anthony	Tassone	[R/T]	UL Solutions	CMP 3 CMP 16
5	Chad	Jones	[M]	Cisco	CMP 3
6	Sam	Rokowski	[I/M]	Maddox Inc.	CMP 3
7	George	Bish	[M]	Amazon/Ring Protect Inc	CMP 16
8	Trevor	Bowmer	[U]	Telecom Consulting	NEC Correlating Committee CMP 16
9	Ronald	Tellas	[M]	CCCA	CMP 3 CMP 16
10	Tim	Mikloiche	[E]	IAEI	CMP 3
11	Ryan	Jackosn	[M]	Steel Tube Industry	CMP 3
12	Diana	Lettkeman	[M]	Dish	CMP 16
13	John	Kacperski	[L]	IBEW	CMP 16

Public Comment No. 1440-NFPA 70-2024 [Section No. 722.100(A)(10)]

~~**(10)** Under-Carpet Cables.~~

~~Under-carpet cable shall be listed as suitable for use under carpet, floor covering, modular tiles, and planks.~~

~~Informational Note: See UL 444, *Standard for Safety for Communications Cables* , for the compressive loading test used to determine the suitability of cable for under-carpet use.~~

Additional Proposed Changes

File Name	Description	Approved
Limited_Energy_Roster-2026_2nd_Draft.pdf	Limited-Energy Task Group Roster-2nd Draft	

Statement of Problem and Substantiation for Public Comment

This Public comment is submitted on behalf of the Limited-Energy Task Group (see attached roster) to:
(1) Delete section 722.100(A)(10) as it is covered by Section/Table 722.120, NEW 722.2(1)-(2).
(2) Delete and relocate the Informational Note to 722.100(A)(10) to section/table 722.130 for communications cables.

Related Public Comments for This Document

Related Comment	Relationship
Public Comment No. 1441-NFPA 70-2024 [Section No. 722.130]	PC to relocate info note from 722.100(A)(10) to section 722.130.
Public Comment No. 924-NFPA 70-2024 [New Section after 722.1]	PC to create new listing requirement section in 722.2
Public Comment No. 1441-NFPA 70-2024 [Section No. 722.130]	

Related Item

- FCR-238

Submitter Information Verification

Submitter Full Name: Kyle Krueger
Organization: NECA
Affiliation: NECA
Street Address:
City:
State:
Zip:

Submittal Date: Thu Aug 22 17:03:59 EDT 2024
Committee: NEC-P03

Limited Energy Task Group [2nd Draft]					
No.	First Name	Last Name	Class.	Organization	Other Committees
1	Kyle	Krueger	[I/M]	NECA	NEC-Correlating Comittee CMP 3 NFPA 72-Correlating Committee
2	Ernie	Gallo	[U/T]	NEBScore	
3	Derrick	Atkins	[L]	Minneapolis Electrical JA	NEC-Correlating Committee CMP 5
4	Anthony	Tassone	[R/T]	UL Solutions	CMP 3 CMP 16
5	Chad	Jones	[M]	Cisco	CMP 3
6	Sam	Rokowski	[I/M]	Maddox Inc.	CMP 3
7	George	Bish	[M]	Amazon/Ring Protect Inc	CMP 16
8	Trevor	Bowmer	[U]	Telecom Consulting	NEC Correlating Committee CMP 16
9	Ronald	Tellas	[M]	CCCA	CMP 3 CMP 16
10	Tim	Mikloiche	[E]	IAEI	CMP 3
11	Ryan	Jackosn	[M]	Steel Tube Industry	CMP 3
12	Diana	Lettkeman	[M]	Dish	CMP 16
13	John	Kacperski	[L]	IBEW	CMP 16

Public Comment No. 933-NFPA 70-2024 [Section No. 722.100(A)(11)]

~~**(11)** Wet Locations.~~

~~Cable used in a wet location shall be listed for use in wet locations and be marked "wet" or "wet location" or have a moisture-impervious metal sheath.~~

Additional Proposed Changes

File Name	Description	Approved
Limited_Energy_Roster-2026_2nd_Draft.pdf	Limited-Energy Task Group Roster-2nd Draft	

Statement of Problem and Substantiation for Public Comment

This Public comment is submitted on behalf of the Limited-Energy Task Group (see attached roster) to delete the listing portion of the requirement in 722.100(A)11 as it is now covered by new Section 722.2. See companion PC-924.

Related Public Comments for This Document

Related Comment	Relationship
Public Comment No. 924-NFPA 70-2024 [New Section after 722.1]	PC creating new listing requirements section in 722.2.
Public Comment No. 1499-NFPA 70-2024 [Section No. 722.102]	PC creating a new (C) in 722.100 for marking requirements for wet locations.
Public Comment No. 924-NFPA 70-2024 [New Section after 722.1]	
Public Comment No. 1499-NFPA 70-2024 [Section No. 722.102]	

Related Item

- FCR-238

Submitter Information Verification

Submitter Full Name: Kyle Krueger
Organization: NECA
Affiliation: NECA
Street Address:
City:
State:
Zip:

Submittal Date: Wed Aug 07 17:17:12 EDT 2024
Committee: NEC-P03

Limited Energy Task Group [2nd Draft]					
No.	First Name	Last Name	Class.	Organization	Other Committees
1	Kyle	Krueger	[I/M]	NECA	NEC-Correlating Comittee CMP 3 NFPA 72-Correlating Committee
2	Ernie	Gallo	[U/T]	NEBScore	
3	Derrick	Atkins	[L]	Minneapolis Electrical JA	NEC-Correlating Committee CMP 5
4	Anthony	Tassone	[R/T]	UL Solutions	CMP 3 CMP 16
5	Chad	Jones	[M]	Cisco	CMP 3
6	Sam	Rokowski	[I/M]	Maddox Inc.	CMP 3
7	George	Bish	[M]	Amazon/Ring Protect Inc	CMP 16
8	Trevor	Bowmer	[U]	Telecom Consulting	NEC Correlating Committee CMP 16
9	Ronald	Tellas	[M]	CCCA	CMP 3 CMP 16
10	Tim	Mikloiche	[E]	IAEI	CMP 3
11	Ryan	Jackosn	[M]	Steel Tube Industry	CMP 3
12	Diana	Lettkeman	[M]	Dish	CMP 16
13	John	Kacperski	[L]	IBEW	CMP 16

Public Comment No. 1423-NFPA 70-2024 [Section No. 722.100(A)(12)]

~~**(12)** Field-Assembled Optical Fiber Cables.~~

~~Field-assembled optical fiber cable shall comply with 722.100(A)(12)(a) through 722.100(A)(12)(d) :~~

(1) ~~The specific combination of jacket and optical fibers intended to be installed as a field-assembled optical fiber cable shall be one of the types in 722.100(A)(1) , 722.100(A)(2) , or 722.100(A)(3) and shall be marked in accordance with Table 722.102(A) :~~

(2) ~~The jacket of a field-assembled optical fiber cable shall have a surface marking indicating the specific optical fibers with which it is identified for use.~~

(3) ~~The optical fibers shall have a permanent marking, such as a marker tape, indicating the jacket with which they are identified for use.~~

(4) ~~The jacket without fibers shall meet the listing requirements for communications raceways in 722.110 and 722.111 in accordance with the cable marking.~~

Additional Proposed Changes

File Name	Description	Approved
Limited_Energy_Roster-2026_2nd_Draft.pdf	Limited-Energy Task Group Roster-2nd Draft	

Statement of Problem and Substantiation for Public Comment

This Public comment is submitted on behalf of the Limited-Energy Task Group (see attached roster) to delete section 722.100(A)(12) and relocate to new section 722.160(B) with other optical fiber requirements.

Related Public Comments for This Document

Related Comment	Relationship
Public Comment No. 1421-NFPA 70-2024 [Section No. 722.100(A)]	PC deleting info note no 3 from 722.100(A) as it was relocated to 722.160
Public Comment No. 1424-NFPA 70-2024 [Section No. 722.160]	Pc relocating info note 3 from 722.100(A) and 722.100(A)(12) to section 722.160(A)-(B)
Public Comment No. 1421-NFPA 70-2024 [Section No. 722.100(A)]	
Public Comment No. 1424-NFPA 70-2024 [Section No. 722.160]	

Related Item

- FCR-238

Submitter Information Verification

Submitter Full Name: Kyle Krueger
Organization: NECA
Affiliation: NECA
Street Address:
City:
State:
Zip:

Submittal Date: Thu Aug 22 15:27:00 EDT 2024
Committee: NEC-P03

Limited Energy Task Group [2nd Draft]					
No.	First Name	Last Name	Class.	Organization	Other Committees
1	Kyle	Krueger	[I/M]	NECA	NEC-Correlating Comittee CMP 3 NFPA 72-Correlating Committee
2	Ernie	Gallo	[U/T]	NEBScore	
3	Derrick	Atkins	[L]	Minneapolis Electrical JA	NEC-Correlating Committee CMP 5
4	Anthony	Tassone	[R/T]	UL Solutions	CMP 3 CMP 16
5	Chad	Jones	[M]	Cisco	CMP 3
6	Sam	Rokowski	[I/M]	Maddox Inc.	CMP 3
7	George	Bish	[M]	Amazon/Ring Protect Inc	CMP 16
8	Trevor	Bowmer	[U]	Telecom Consulting	NEC Correlating Committee CMP 16
9	Ronald	Tellas	[M]	CCCA	CMP 3 CMP 16
10	Tim	Mikloiche	[E]	IAEI	CMP 3
11	Ryan	Jackosn	[M]	Steel Tube Industry	CMP 3
12	Diana	Lettkeman	[M]	Dish	CMP 16
13	John	Kacperski	[L]	IBEW	CMP 16

Public Comment No. 1497-NFPA 70-2024 [Section No. 722.100(A)(13)]

~~**(13)** Cables Containing Optical Fibers.~~

~~Composite optical fiber cables shall be listed as electrical cables based on the type of electrical conductors.~~

Additional Proposed Changes

File Name	Description	Approved
Limited_Energy_Roster-2026_2nd_Draft.pdf	Limited-Energy Task Group Roster-2nd Draft	

Statement of Problem and Substantiation for Public Comment

This Public comment is submitted on behalf of the Limited-Energy Task Group (see attached roster) to delete section 722.100(A)(13) as this is already adequately covered by section 722.14.

Related Item

- FCR-238

Submitter Information Verification

Submitter Full Name: Kyle Krueger
Organization: NECA
Affiliation: NECA
Street Address:
City:
State:
Zip:

Submittal Date: Fri Aug 23 15:38:13 EDT 2024
Committee: NEC-P03

Limited Energy Task Group [2nd Draft]					
No.	First Name	Last Name	Class.	Organization	Other Committees
1	Kyle	Krueger	[I/M]	NECA	NEC-Correlating Comittee CMP 3 NFPA 72-Correlating Committee
2	Ernie	Gallo	[U/T]	NEBScore	
3	Derrick	Atkins	[L]	Minneapolis Electrical JA	NEC-Correlating Committee CMP 5
4	Anthony	Tassone	[R/T]	UL Solutions	CMP 3 CMP 16
5	Chad	Jones	[M]	Cisco	CMP 3
6	Sam	Rokowski	[I/M]	Maddox Inc.	CMP 3
7	George	Bish	[M]	Amazon/Ring Protect Inc	CMP 16
8	Trevor	Bowmer	[U]	Telecom Consulting	NEC Correlating Committee CMP 16
9	Ronald	Tellas	[M]	CCCA	CMP 3 CMP 16
10	Tim	Mikloiche	[E]	IAEI	CMP 3
11	Ryan	Jackosn	[M]	Steel Tube Industry	CMP 3
12	Diana	Lettkeman	[M]	Dish	CMP 16
13	John	Kacperski	[L]	IBEW	CMP 16

Public Comment No. 1438-NFPA 70-2024 [Section No. 722.100(A)(14)]

~~**(14)** Class 2 and Class 3 Cable Voltage and Temperature Ratings.~~

~~Class 2 cables shall have a voltage rating of not less than 150 volts. Class 3 cables shall have a voltage rating of not less than 300 volts. Class 2 and Class 3 cables shall have a temperature rating of not less than 60°C (140°F).~~

Additional Proposed Changes

File Name	Description	Approved
Limited_Energy_Roster-2026_2nd_Draft.pdf	Limited-Energy Task Group Roster-2nd Draft	

Statement of Problem and Substantiation for Public Comment

This Public comment is submitted on behalf of the Limited-Energy Task Group 9see attached roster) to relocate section 722.100(A)(14) to new section 722.140(A)(3) with other requirements for class 2 and 3 cables.

Related Public Comments for This Document

Related Comment	Relationship
Public Comment No. 1437-NFPA 70-2024 [Section No. 722.100(A)(8)]	PC to delete section 722.100(A)(8)
Public Comment No. 1439-NFPA 70-2024 [Section No. 722.140(A)]	PC to relocate section 722.100(A)(8) and 722.100(A)(14) to section 722.140.
Public Comment No. 1437-NFPA 70-2024 [Section No. 722.100(A)(8)]	
Public Comment No. 1439-NFPA 70-2024 [Section No. 722.140(A)]	

Related Item

- FCR-238

Submitter Information Verification

Submitter Full Name: Kyle Krueger
Organization: NECA
Affiliation: NECA
Street Address:
City:
State:
Zip:

Submittal Date: Thu Aug 22 16:48:20 EDT 2024
Committee: NEC-P03

Limited Energy Task Group [2nd Draft]					
No.	First Name	Last Name	Class.	Organization	Other Committees
1	Kyle	Krueger	[I/M]	NECA	NEC-Correlating Comittee CMP 3 NFPA 72-Correlating Committee
2	Ernie	Gallo	[U/T]	NEBScore	
3	Derrick	Atkins	[L]	Minneapolis Electrical JA	NEC-Correlating Committee CMP 5
4	Anthony	Tassone	[R/T]	UL Solutions	CMP 3 CMP 16
5	Chad	Jones	[M]	Cisco	CMP 3
6	Sam	Rokowski	[I/M]	Maddox Inc.	CMP 3
7	George	Bish	[M]	Amazon/Ring Protect Inc	CMP 16
8	Trevor	Bowmer	[U]	Telecom Consulting	NEC Correlating Committee CMP 16
9	Ronald	Tellas	[M]	CCCA	CMP 3 CMP 16
10	Tim	Mikloiche	[E]	IAEI	CMP 3
11	Ryan	Jackosn	[M]	Steel Tube Industry	CMP 3
12	Diana	Lettkeman	[M]	Dish	CMP 16
13	John	Kacperski	[L]	IBEW	CMP 16

Public Comment No. 1417-NFPA 70-2024 [Section No. 722.100(A)(15)]

~~**(15)** Power-Limited Fire Alarm (PLFA) Cables.~~

~~PFLA cables shall comply with 722.100(A)(15)(a) through 722.100(A)(15)(d)~~ :

(1) ~~Conductors for cables, other than coaxial cables, shall be solid or stranded copper. Coaxial cables shall be permitted to use 30 percent conductivity copper-covered steel center conductor wire.~~

(2) ~~The size of conductors in a multiconductor cable shall not be smaller than 26 AWG. Single conductors shall not be smaller than 18 AWG. Conductors of 26 AWG shall be permitted only where spliced with a connector listed as suitable for 26 AWG to 24 AWG or larger conductors that are terminated on equipment or where the 26 AWG conductors are terminated on equipment listed as suitable for 26 AWG conductors.~~

(3) ~~Cables shall have a voltage rating of not less than 300 volts.~~

(4) ~~Cables shall have a temperature rating of not less than 60°C (140°F).~~

Additional Proposed Changes

File Name	Description	Approved
Limited_Energy_Roster-2026_2nd_Draft.pdf	Limited-Energy Task Group Roster-2nd Draft	

Statement of Problem and Substantiation for Public Comment

This Public comment is submitted on behalf of the Limited-Energy Task Group (see attached roster) to delete redundant portions of section 722.100(A)(15) that are already addressed in section 722.171. The unique requirements of this section have been relocated to section 722.171. Additionally, there was positive code language that provided an exception for coaxial cable, this language has been revised into a proper exception to new 722.171(B)(1).

Related Public Comments for This Document

Related Comment	Relationship
Public Comment No. 1418-NFPA 70-2024 [Section No. 722.171]	PC relocating these requirements to section 722.171(B)(1).
Public Comment No. 1418-NFPA 70-2024 [Section No. 722.171]	

Related Item

- FCR-238

Submitter Information Verification

Submitter Full Name: Kyle Krueger
Organization: NECA
Affiliation: NECA
Street Address:
City:
State:
Zip:

Submittal Date: Thu Aug 22 15:15:01 EDT 2024
Committee: NEC-P03

Limited Energy Task Group [2nd Draft]					
No.	First Name	Last Name	Class.	Organization	Other Committees
1	Kyle	Krueger	[I/M]	NECA	NEC-Correlating Comittee CMP 3 NFPA 72-Correlating Committee
2	Ernie	Gallo	[U/T]	NEBScore	
3	Derrick	Atkins	[L]	Minneapolis Electrical JA	NEC-Correlating Committee CMP 5
4	Anthony	Tassone	[R/T]	UL Solutions	CMP 3 CMP 16
5	Chad	Jones	[M]	Cisco	CMP 3
6	Sam	Rokowski	[I/M]	Maddox Inc.	CMP 3
7	George	Bish	[M]	Amazon/Ring Protect Inc	CMP 16
8	Trevor	Bowmer	[U]	Telecom Consulting	NEC Correlating Committee CMP 16
9	Ronald	Tellas	[M]	CCCA	CMP 3 CMP 16
10	Tim	Mikloiche	[E]	IAEI	CMP 3
11	Ryan	Jackosn	[M]	Steel Tube Industry	CMP 3
12	Diana	Lettkeman	[M]	Dish	CMP 16
13	John	Kacperski	[L]	IBEW	CMP 16

Public Comment No. 1429-NFPA 70-2024 [Section No. 722.100(A)(16)]

~~**(16)** Class 4 Cable Construction.~~

(a) ~~*Sizes.* Conductors of sizes not smaller than 24 AWG shall be permitted to be used.~~

(b) ~~*Insulation.* Insulation on conductors shall be rated not less than 450 volts dc.~~

(c) ~~*Voltage Rating.* Cables shall have a voltage rating of not less than 450 volts dc. Voltage ratings shall not be marked on the cables.~~

(d) ~~*Temperature Rating.* Cables shall have a temperature rating of not less than 60°C (140°F).~~

Additional Proposed Changes

File Name	Description	Approved
Limited_Energy_Roster-2026_2nd_Draft.pdf	Limited-Energy Task Group Roster-2nd Draft	

Statement of Problem and Substantiation for Public Comment

This Public comment is submitted on behalf of the Limited-Energy Task Group (see attached roster) to delete section 722.100(A)(16) to the more appropriate location in 722.150 as it pertains to requirements for class 4 cables not listing.

Related Public Comments for This Document

Related Comment	Relationship
Public Comment No. 1428-NFPA 70-2024 [Section No. 722.100(A)]	PC deleting info note 4 from 722.100(A) as it is now located in 722.150.
Public Comment No. 1430-NFPA 70-2024 [Section No. 726.139]	PC deleting section 726.139 as these requirements are relocated to 722.150-152.
Public Comment No. 1431-NFPA 70-2024 [Section No. 722.150(A)]	PC revising 722.150(A) and adding info note from 722.100(A).
Public Comment No. 1432-NFPA 70-2024 [New Section after 722.150(C)]	PC creating section 722.151 to house the requirements deleted from 722.100(A)(16).
Public Comment No. 1434-NFPA 70-2024 [New Section after 722.150(C)]	PC adding new section 722.152 to house class 4 cable requirements from 726.139.
Public Comment No. 1428-NFPA 70-2024 [Section No. 722.100(A)]	
Public Comment No. 1430-NFPA 70-2024 [Section No. 726.139]	
Public Comment No. 1432-NFPA 70-2024 [New Section after 722.150(C)]	
Public Comment No. 1434-NFPA 70-2024 [New Section after 722.150(C)]	

Related Item

- FCR-238

Submitter Information Verification

Submitter Full Name: Kyle Krueger
Organization: NECA
Affiliation: NECA
Street Address:
City:
State:
Zip:

Submittal Date: Thu Aug 22 15:46:34 EDT 2024
Committee: NEC-P03

Limited Energy Task Group [2nd Draft]					
No.	First Name	Last Name	Class.	Organization	Other Committees
1	Kyle	Krueger	[I/M]	NECA	NEC-Correlating Comittee CMP 3 NFPA 72-Correlating Committee
2	Ernie	Gallo	[U/T]	NEBScore	
3	Derrick	Atkins	[L]	Minneapolis Electrical JA	NEC-Correlating Committee CMP 5
4	Anthony	Tassone	[R/T]	UL Solutions	CMP 3 CMP 16
5	Chad	Jones	[M]	Cisco	CMP 3
6	Sam	Rokowski	[I/M]	Maddox Inc.	CMP 3
7	George	Bish	[M]	Amazon/Ring Protect Inc	CMP 16
8	Trevor	Bowmer	[U]	Telecom Consulting	NEC Correlating Committee CMP 16
9	Ronald	Tellas	[M]	CCCA	CMP 3 CMP 16
10	Tim	Mikloiche	[E]	IAEI	CMP 3
11	Ryan	Jackosn	[M]	Steel Tube Industry	CMP 3
12	Diana	Lettkeman	[M]	Dish	CMP 16
13	John	Kacperski	[L]	IBEW	CMP 16

Public Comment No. 1413-NFPA 70-2024 [Section No. 722.100(A) [Excluding any Sub-Sections]]

Cables installed as wiring methods within buildings shall be listed as resistant to the spread of fire and other criteria in accordance with 722.100(A)(1) through 722.100(A)(16).

Informational Note No.

~~1: See UL 13, *Standard for Power-Limited Circuit Cables* , for applicable requirements for listing of Class~~

2

~~and Class 3 cable and power-limited tray cable (PLTC).Informational Note No. 2~~

: See UL 1424, *Cables for Power-Limited Fire-Alarm Circuits* , for applicable requirements for listing of power-limited fire alarm cable.

Informational Note No. 3: See UL 1651, *Optical Fiber Cable* , for applicable requirements for listing of optical fiber cable.

Informational Note No. 4: See UL 1400-2, *Outline for Fault-Managed Power Systems — Part 2: Requirements for Class 4 Cables* , for applicable requirements for listing of Class 4 cable.

Additional Proposed Changes

File Name	Description	Approved
Limited_Energy_Roster-2026_2nd_Draft.pdf	Limited-Energy Task Group Roster-2nd Draft	

Statement of Problem and Substantiation for Public Comment

This public comment is submitted on behalf of the Limited-Energy Task Group (see attached roster) to delete Informational Note No.1 of 722.100(A) as it has been relocated to section/Table 722.120 for Limited-Energy cable applications.

Related Public Comments for This Document

Related Comment	Relationship
Public Comment No. 1414-NFPA 70-2024 [Section No. 722.120]	PC adding this info note to section 722.120
Public Comment No. 1414-NFPA 70-2024 [Section No. 722.120]	

Related Item

- FCR-238

Submitter Information Verification

Submitter Full Name: Kyle Krueger
Organization: NECA
Affiliation: NECA
Street Address:
City:
State:
Zip:

Submittal Date: Thu Aug 22 15:04:42 EDT 2024
Committee: NEC-P03

Limited Energy Task Group [2nd Draft]					
No.	First Name	Last Name	Class.	Organization	Other Committees
1	Kyle	Krueger	[I/M]	NECA	NEC-Correlating Comittee CMP 3 NFPA 72-Correlating Committee
2	Ernie	Gallo	[U/T]	NEBScore	
3	Derrick	Atkins	[L]	Minneapolis Electrical JA	NEC-Correlating Committee CMP 5
4	Anthony	Tassone	[R/T]	UL Solutions	CMP 3 CMP 16
5	Chad	Jones	[M]	Cisco	CMP 3
6	Sam	Rokowski	[I/M]	Maddox Inc.	CMP 3
7	George	Bish	[M]	Amazon/Ring Protect Inc	CMP 16
8	Trevor	Bowmer	[U]	Telecom Consulting	NEC Correlating Committee CMP 16
9	Ronald	Tellas	[M]	CCCA	CMP 3 CMP 16
10	Tim	Mikloiche	[E]	IAEI	CMP 3
11	Ryan	Jackosn	[M]	Steel Tube Industry	CMP 3
12	Diana	Lettkeman	[M]	Dish	CMP 16
13	John	Kacperski	[L]	IBEW	CMP 16

Public Comment No. 925-NFPA 70-2024 [Section No. 722.100 [Excluding any Sub-Sections]]

~~Cables installed in buildings shall be listed in accordance with 722.100(A)(1) through 722.100(A)(16) :~~

~~*Exception No. 1: Optical fiber cables that are installed in compliance with 722.168 shall not be required to be listed.*~~

~~*Exception No. 2: Cables installed in compliance with 800.48 shall not be required to be listed.*~~

Additional Proposed Changes

File Name	Description	Approved
Limited_Energy_Roster-2026_2nd_Draft.pdf	Limited-Energy Task Group Roster-2nd Draft	

Statement of Problem and Substantiation for Public Comment

This public comment is submitted on behalf of the Limited-Energy Task Group (see attached roster of task group) to delete 722.100(A) and as these general listing requirements are moved to new section 722.2 in companion public comment PC-924 to achieve compliance with the NEC style manual section 2.2.1 for required parallel numbering.

Related Public Comments for This Document

Related Comment	Relationship
Public Comment No. 924-NFPA 70-2024 [New Section after 722.1]	
Public Comment No. 924-NFPA 70-2024 [New Section after 722.1]	

Related Item

- FCR-238

Submitter Information Verification

Submitter Full Name: Kyle Krueger
Organization: NECA
Affiliation: NECA
Street Address:
City:
State:
Zip:

Submittal Date: Wed Aug 07 17:04:52 EDT 2024
Committee: NEC-P03

Limited Energy Task Group [2nd Draft]					
No.	First Name	Last Name	Class.	Organization	Other Committees
1	Kyle	Krueger	[I/M]	NECA	NEC-Correlating Comittee CMP 3 NFPA 72-Correlating Committee
2	Ernie	Gallo	[U/T]	NEBScore	
3	Derrick	Atkins	[L]	Minneapolis Electrical JA	NEC-Correlating Committee CMP 5
4	Anthony	Tassone	[R/T]	UL Solutions	CMP 3 CMP 16
5	Chad	Jones	[M]	Cisco	CMP 3
6	Sam	Rokowski	[I/M]	Maddox Inc.	CMP 3
7	George	Bish	[M]	Amazon/Ring Protect Inc	CMP 16
8	Trevor	Bowmer	[U]	Telecom Consulting	NEC Correlating Committee CMP 16
9	Ronald	Tellas	[M]	CCCA	CMP 3 CMP 16
10	Tim	Mikloiche	[E]	IAEI	CMP 3
11	Ryan	Jackosn	[M]	Steel Tube Industry	CMP 3
12	Diana	Lettkeman	[M]	Dish	CMP 16
13	John	Kacperski	[L]	IBEW	CMP 16

Public Comment No. 1499-NFPA 70-2024 [Section No. 722.102]

722.~~102~~ 100 Marking of Listed Limited-Energy and Communications Cables.

(A) General.

Cables installed in buildings shall be marked in accordance with 722.~~102~~ 100 (A), and they shall be permitted to be marked in accordance with 722.~~102~~ 100 (B).

Cables shall be durably marked on the surface in accordance with the following:

(1) The AWG size or circular mil area shall be repeated at intervals not exceeding 610 mm (24 in.).

(2) All other markings shall be repeated at intervals not exceeding 1.0 m (40 in.).

(3) The proper type designation for the type of cable shall be marked in accordance with Table 722.~~102~~ 100 (A).

(4) The manufacturer's name, trademark, or other distinctive marking by which the organization responsible for the product can be readily identified shall be marked.

(5) The AWG size or circular mil area shall be marked.

Informational Note No. 1: See Chapter 9, Table 8 for conductor area expressed in SI units for conductor sizes specified in AWG or circular mil area.

(6) The temperature rating for a temperature rating exceeding 60°C (140°F) shall be marked.

Informational Note No. 2: A minimum temperature rating of 60°C (140°F) is assumed for cables not marked with a temperature rating.

(7) Voltage ratings shall not be marked on the cables.

Exception: Voltage markings shall be permitted where the cable has multiple listings, and a voltage marking is required for one or more of the listings.

Informational Note No. 3: Voltage markings on cables could be misinterpreted to suggest that the cables may be suitable for Class 1 electric light and power applications.

Informational Note No. 4: Cable types are listed in descending order of fire resistance rating.

Table 722.~~102~~ 100 (A) Cable Type Markings

Cable Type	Cable Marking
Class 4 plenum cable	CL4P
Class 3 plenum cable	CL3P
Class 2 plenum cable	CL2P
Power-limited fire alarm plenum cable	FPLP
Nonconductive optical fiber plenum cable	OFNP
Conductive optical fiber plenum cable	OFCP
Class 4 riser cable	CL4R
Class 3 riser cable	CL3R
Class 2 riser cable	CL2R
Power-limited fire alarm riser cable	FPLR
Nonconductive optical fiber riser cable	OFNR
Conductive optical fiber riser cable	OFCR
Class 4 general-purpose cable	CL4
Class 3 general-purpose cable	CL3
Class 2 general-purpose cable	CL2
Class 4 outdoor-only use cable	CL4Z
Power-limited fire alarm cable	FPL
Nonconductive general-purpose optical fiber cable	OFN
Conductive general-purpose optical fiber cable	OFC
Alternative nonconductive general-purpose optical fiber cable	OFNG
Alternative conductive general-purpose optical fiber cable	OFCG
Class 3 cable — limited use	CL3X
Class 2 cable — limited use	CL2X
Under-carpet cable	CMUC

Note: All types of CL2, CL3, CL4, and FPL cables containing optical fibers are provided with the suffix "-OF."

(B) Optional Markings.

Cables shall be permitted to be surface marked to indicate special characteristics of the cable materials.

Informational Note No. 1: Examples of these characteristics include, but are not limited to, limited smoke, halogen free, low smoke and halogen free, and sunlight resistant.

Informational Note No. 2: Some examples of optional markings are ST1 to indicate limited smoke characteristics. See UL 2556, *Wire and Cable Test Methods*, HF to indicate halogen free. See in UL 2885, *Outline of Investigation for Acid Gas, Acidity and Conductivity of Combusted Materials*, and LSHF to indicate halogen free and low-smoke characteristics. See IEC 61034-2, *Measurement of smoke density of cables burning under defined conditions — Part 2: Test procedure and requirements*.

(C) Wet Locations.

Limited-energy cables installed in wet locations shall be marked in accordance with 722.2(B).

Additional Proposed Changes

File Name	Description	Approved
Limited_Energy_Roster-2026_2nd_Draft.pdf	Limited-Energy Task Group Roster-2nd Draft	

Statement of Problem and Substantiation for Public Comment

This Public comment is submitted on behalf of the Limited-Energy Task Group (see attached roster) to:

(1) Renumber section/table 722.102 to accommodate the deletion of Section 722.100(A)(1)-(16).

(2) Create a (C) with the wet location marking requirements from 722.100(A)(11) and add a pointer to new 722.2(B) for listing requirements related to marking.

Related Public Comments for This Document

Related Comment	Relationship
Public Comment No. 933-NFPA 70-2024 [Section No. 722.100(A)(11)]	PC to delete section 722.100(A)(11) containing listing and marking for wet locations
Public Comment No. 933-NFPA 70-2024 [Section No. 722.100(A)(11)]	

Related Item

- FCR-238

Submitter Information Verification

Submitter Full Name: Kyle Krueger
Organization: NECA
Affiliation: NECA
Street Address:
City:
State:
Zip:

Submittal Date: Fri Aug 23 15:42:57 EDT 2024
Committee: NEC-P03

Limited Energy Task Group [2nd Draft]					
No.	First Name	Last Name	Class.	Organization	Other Committees
1	Kyle	Krueger	[I/M]	NECA	NEC-Correlating Comittee CMP 3 NFPA 72-Correlating Committee
2	Ernie	Gallo	[U/T]	NEBScore	
3	Derrick	Atkins	[L]	Minneapolis Electrical JA	NEC-Correlating Committee CMP 5
4	Anthony	Tassone	[R/T]	UL Solutions	CMP 3 CMP 16
5	Chad	Jones	[M]	Cisco	CMP 3
6	Sam	Rokowski	[I/M]	Maddox Inc.	CMP 3
7	George	Bish	[M]	Amazon/Ring Protect Inc	CMP 16
8	Trevor	Bowmer	[U]	Telecom Consulting	NEC Correlating Committee CMP 16
9	Ronald	Tellas	[M]	CCCA	CMP 3 CMP 16
10	Tim	Mikloiche	[E]	IAEI	CMP 3
11	Ryan	Jackosn	[M]	Steel Tube Industry	CMP 3
12	Diana	Lettkeman	[M]	Dish	CMP 16
13	John	Kacperski	[L]	IBEW	CMP 16

Public Comment No. 910-NFPA 70-2024 [Section No. 722.102]

722.102 Marking of Listed Limited-Energy and Communications Cables.

~~**(A)** General.~~

Cables installed in

~~buildings shall be marked in accordance with 722.102(A), and they shall be permitted to be marked in accordance with 722.102(B) .Cables shall be~~

buildings shall be durably marked on the surface in accordance with the following:

(1) The AWG size or circular mil area shall be repeated at intervals not exceeding 610 mm (24 in.).

(2) All other required markings shall be repeated at intervals not exceeding 1.0 m (40 in.).

(3) The proper type designation for the type of cable shall be marked in accordance with Table 722.102(A).

(4) The manufacturer's name, trademark, or other distinctive marking by which the organization responsible for the product can be readily identified shall be marked.

(5) The AWG size or circular mil area shall be marked.

Informational Note No. 1: See Chapter 9, Table 8 for conductor area expressed in SI units for conductor sizes specified in AWG or circular mil area.

(6) The temperature rating for a temperature rating exceeding 60°C (140°F) shall be marked.

Informational Note No. 2: A minimum temperature rating of 60°C (140°F) is assumed for cables not marked with a temperature rating.

(7) Voltage ratings shall not be marked on the cables.

Exception: Voltage markings shall be permitted where the cable has multiple listings, and a voltage marking is required for one or more of the listings.

Informational Note No. 3: Voltage markings on cables could be misinterpreted to suggest that the cables may be suitable for Class 1 electric light and power applications.

Informational Note No. 4: Cable types are listed in descending order of fire resistance rating.

Table 722.102(A) Cable Type Markings

Cable Type	Cable Marking
Class 4 plenum cable	CL4P
Class 3 plenum cable	CL3P
Class 2 plenum cable	CL2P
Power-limited fire alarm plenum cable	FPLP
Nonconductive optical fiber plenum cable	OFNP
Conductive optical fiber plenum cable	OFCP
Class 4 riser cable	CL4R
Class 3 riser cable	CL3R
Class 2 riser cable	CL2R
Power-limited fire alarm riser cable	FPLR
Nonconductive optical fiber riser cable	OFNR
Conductive optical fiber riser cable	OFCR
Class 4 general-purpose cable	CL4
Class 3 general-purpose cable	CL3
Class 2 general-purpose cable	CL2
Class 4 outdoor-only use cable	CL4Z
Power-limited fire alarm cable	FPL
Nonconductive general-purpose optical fiber cable	OFN
Conductive general-purpose optical fiber cable	OFC
Alternative nonconductive general-purpose optical fiber cable	OFNG
Alternative conductive general-purpose optical fiber cable	OFCG
Class 3 cable — limited use	CL3X
Class 2 cable — limited use	CL2X
Under-carpet cable	CMUC

Note: All types of CL2, CL3, CL4, and FPL cables containing optical fibers are provided with the suffix "-OF."

~~**(B)** Optional Markings.~~

~~Cables shall be permitted to be surface marked to indicate special characteristics of the cable materials.~~

~~Informational Note No. 1: Examples of these characteristics include, but are not limited to, limited smoke, halogen free, low smoke and halogen free, and sunlight resistant.~~

~~Informational Note No. 2: Some examples of optional markings are ST1 to indicate limited smoke characteristics. See UL 2556, *Wire and Cable Test Methods* , HF to indicate halogen free. See in UL 2885, *Outline of Investigation for Acid Gas, Acidity and Conductivity of Combusted Materials* , and LSHF to indicate halogen free and low-smoke characteristics. See IEC 61034-2, *Measurement of smoke density of cables burning under defined conditions — Part 2: Test procedure and requirements* .~~

Statement of Problem and Substantiation for Public Comment

Manufacturers do not need our permission to mark their cables with nonrequired information, such as footage markers. That is entriely up to them, and they don't need our blessings for it.

Additionaly, the onlly markings that we should mandate spacings for are the required markings. If a manufacturer wants to include a marking every ten feet to indicate the length of cable left in the box, for example, why can't they?

Related Item

- FCR 238

Submitter Information Verification

Submitter Full Name: Ryan Jackson
Organization: Self-employed
Street Address:
City:
State:
Zip:

Submittal Date: Wed Aug 07 14:44:58 EDT 2024
Committee: NEC-P03

Public Comment No. 1307-NFPA 70-2024 [Section No. 722.110]

~~**722.110** Application and Installation of Raceways, Cable Routing Assemblies, and Cable Trays.~~

~~**(A)** Application of Listed Communications Raceways in Buildings.~~

~~Permitted and nonpermitted applications of listed communications raceways shall be in accordance with Table 722.110(A) :~~

~~Table 722.110(A) Applications of Listed Communications Raceways in Buildings.~~

~~Applications Listed Communications Raceway Type Plenum Riser General-Purpose In ducts specifically fabricated for environmental air as described in 720.22(B) In fabricated ducts N N N In metal raceway that complies with 300.25(B) N N N In other spaces used for environmental air (plenums) as described in 720.22(C) In other spaces used for environmental air Y N N - In metal raceway that complies with 300.25(C) Y Y Y - In plenum cable routing assemblies N N N - Supported by open metal cable trays Y N N - Supported by solid bottom metal cable trays with solid metal covers Y Y Y In risers In vertical runs Y Y N In metal raceways Y Y Y In fireproof shafts Y Y Y In plenum cable routing assemblies N N N In riser cable routing assemblies N N N In one- and two-family dwellings Y Y Y Within buildings in other than air-handling spaces and risers General Y Y Y In one- and two-family dwellings Y Y Y In multifamily dwellings Y Y Y In nonconcealed spaces Y Y Y Supported by cable trays Y Y Y Under carpet, modular flooring, and planks N N N In distributing frames and cross-connect arrays Y Y Y In any raceway recognized in Chapter 3 Y Y Y In plenum cable routing assemblies N N N In riser cable routing assemblies N N N In general-purpose cable routing assemblies N N N~~

~~Note: An "N" in the table indicates that the communications raceway type shall not be installed in the application. A "Y" indicates that the communications raceway type shall be permitted to be installed in the application, subject to the limitations described in 722.111 and 722.131.~~

~~**(B)** Application of Listed Cable Routing Assemblies.~~

~~Permitted and nonpermitted applications of listed cable routing assemblies shall be in accordance with Table 722.110(B) :~~

~~Table 722.110(B) Applications of Listed Cable Routing Assemblies in Buildings.~~

~~Applications Listed Cable Routing Assembly Type Plenum Riser General-Purpose In ducts specifically fabricated for environmental air as described in 720.22(B) In fabricated ducts N N N In metal raceway that complies with 300.25(B) N N N In other spaces used for environmental air (plenums) as described in 720.22(C) In other spaces used for environmental air Y N N In metal raceway that complies with 300.25(C) Y Y Y - In plenum cable routing assemblies N N N - Supported by open metal cable trays Y N N - Supported by solid bottom metal cable trays with solid metal covers Y Y Y In risers In vertical runs Y Y N - In metal raceways Y Y Y - In fireproof shafts Y Y Y - In plenum cable routing assemblies N N N - In riser cable routing assemblies N N N - In one- and two-family dwellings Y Y Y Within buildings in other than air-handling spaces and risers General Y Y Y In one- and two-family dwellings Y Y Y In multifamily dwellings Y Y Y In nonconcealed spaces Y Y Y Supported by cable trays Y Y Y Under carpet, modular flooring, and planks N N N In distributing frames and cross-connect arrays Y Y Y In any raceway recognized in Chapter 3 Y Y Y In plenum cable routing assemblies N N N In riser cable routing assemblies N N N In general-purpose cable routing assemblies N N N~~

~~Note: An "N" in the table indicates that the cable routing assembly type shall not be installed in the application. A "Y" indicates that the cable routing assembly type shall be permitted to be installed in the application subject to the limitations described in 722.131.~~

Additional Proposed Changes

File Name	Description	Approved
Limited_Energy_Roster-2026_2nd_Draft.pdf	Limited-Energy Task Group Roster-2nd Draft	

Statement of Problem and Substantiation for Public Comment

This public comment is submitted by the Limited-Energy Task Group (see attached roster) to delete section 722.110 for Raceways, Cable Routing Assemblies, and Cable Trays as these requirements have been relocated to new Article 723 that was created by a companion PC submitted by this Task Group.
See companion PC-1308, 1309, 1310 & 1312.

Related Public Comments for This Document

Related Comment	Relationship
Public Comment No. 1312-NFPA 70-2024 [New Section after 722.182]	NEW Article 723
Public Comment No. 1308-NFPA 70-2024 [Section No. 722.111]	Delete section 722.111
Public Comment No. 1309-NFPA 70-2024 [Section No. 722.112]	Delete section 722.112
Public Comment No. 1310-NFPA 70-2024 [Section No. 722.113]	Delete section 722.113
Public Comment No. 1308-NFPA 70-2024 [Section No. 722.111]	
Public Comment No. 1310-NFPA 70-2024 [Section No. 722.113]	
Public Comment No. 1312-NFPA 70-2024 [New Section after 722.182]	

Related Item

- FCR-238

Submitter Information Verification

Submitter Full Name: Kyle Krueger
Organization: NECA
Affiliation: NECA
Street Address:
City:
State:
Zip:

Submittal Date: Tue Aug 20 13:24:09 EDT 2024
Committee: NEC-P03

Limited Energy Task Group [2nd Draft]					
No.	First Name	Last Name	Class.	Organization	Other Committees
1	Kyle	Krueger	[I/M]	NECA	NEC-Correlating Comittee CMP 3 NFPA 72-Correlating Committee
2	Ernie	Gallo	[U/T]	NEBScore	
3	Derrick	Atkins	[L]	Minneapolis Electrical JA	NEC-Correlating Committee CMP 5
4	Anthony	Tassone	[R/T]	UL Solutions	CMP 3 CMP 16
5	Chad	Jones	[M]	Cisco	CMP 3
6	Sam	Rokowski	[I/M]	Maddox Inc.	CMP 3
7	George	Bish	[M]	Amazon/Ring Protect Inc	CMP 16
8	Trevor	Bowmer	[U]	Telecom Consulting	NEC Correlating Committee CMP 16
9	Ronald	Tellas	[M]	CCCA	CMP 3 CMP 16
10	Tim	Mikloiche	[E]	IAEI	CMP 3
11	Ryan	Jackosn	[M]	Steel Tube Industry	CMP 3
12	Diana	Lettkeman	[M]	Dish	CMP 16
13	John	Kacperski	[L]	IBEW	CMP 16

Public Comment No. 59-NFPA 70-2024 [Section No. 722.110]

~~**722.110** Application and Installation of Raceways, Cable Routing Assemblies, and Cable Trays.~~

~~**(A)** Application of Listed Communications Raceways in Buildings.~~

~~Permitted and nonpermitted applications of listed communications raceways shall be in accordance with Table 722.110(A) :~~

~~Table 722.110(A) Applications of Listed Communications Raceways in Buildings.~~

~~Applications Listed Communications Raceway Type Plenum Riser General-Purpose In ducts specifically fabricated for environmental air as described in 720.22(B) In fabricated ducts N N N In metal raceway that complies with 300.25(B) N N N In other spaces used for environmental air (plenums) as described in 720.22(C) In other spaces used for environmental air Y N N - In metal raceway that complies with 300.25(C) Y Y Y - In plenum cable routing assemblies N N N - Supported by open metal cable trays Y N N - Supported by solid bottom metal cable trays with solid metal covers Y Y Y In risers In vertical runs Y Y N In metal raceways Y Y Y In fireproof shafts Y Y Y In plenum cable routing assemblies N N N In riser cable routing assemblies N N N In one- and two-family dwellings Y Y Y Within buildings in other than air-handling spaces and risers General Y Y Y In one- and two-family dwellings Y Y Y In multifamily dwellings Y Y Y In nonconcealed spaces Y Y Y Supported by cable trays Y Y Y Under carpet, modular flooring, and planks N N N In distributing frames and cross-connect arrays Y Y Y In any raceway recognized in Chapter 3 Y Y Y In plenum cable routing assemblies N N N In riser cable routing assemblies N N N In general-purpose cable routing assemblies N N N~~

~~Note: An "N" in the table indicates that the communications raceway type shall not be installed in the application. A "Y" indicates that the communications raceway type shall be permitted to be installed in the application, subject to the limitations described in 722.111 and 722.131.~~

~~**(B)** Application of Listed Cable Routing Assemblies.~~

~~Permitted and nonpermitted applications of listed cable routing assemblies shall be in accordance with Table 722.110(B) :~~

~~Table 722.110(B) Applications of Listed Cable Routing Assemblies in Buildings.~~

~~Applications Listed Cable Routing Assembly Type Plenum Riser General-Purpose In ducts specifically fabricated for environmental air as described in 720.22(B) In fabricated ducts N N N In metal raceway that complies with 300.25(B) N N N In other spaces used for environmental air (plenums) as described in 720.22(C) In other spaces used for environmental air Y N N In metal raceway that complies with 300.25(C) Y Y Y - In plenum cable routing assemblies N N N - Supported by open metal cable trays Y N N - Supported by solid bottom metal cable trays with solid metal covers Y Y Y In risers In vertical runs Y Y N - In metal raceways Y Y Y - In fireproof shafts Y Y Y - In plenum cable routing assemblies N N N - In riser cable routing assemblies N N N - In one- and two-family dwellings Y Y Y Within buildings in other than air-handling spaces and risers General Y Y Y In one- and two-family dwellings Y Y Y In multifamily dwellings Y Y Y In nonconcealed spaces Y Y Y Supported by cable trays Y Y Y Under carpet, modular flooring, and planks N N N In distributing frames and cross-connect arrays Y Y Y In any raceway recognized in Chapter 3 Y Y Y In plenum cable routing assemblies N N N In riser cable routing assemblies N N N In general-purpose cable routing assemblies N N N~~

~~Note: An "N" in the table indicates that the cable routing assembly type shall not be installed in the application. A "Y" indicates that the cable routing assembly type shall be permitted to be installed in the application subject to the limitations described in 722.131.~~

Statement of Problem and Substantiation for Public Comment

This PC coordinates with PC 52 which recommends establishing new Article 723 to cover the installation of cable routing assemblies and communications raceways.

This PC recommends deleting 722.110 since it outside the scope of Article 722 (which only covers limited-energy cables). PC 52 recommends moving the information in 722.110 to new Article 723.

Related Public Comments for This Document

Related Comment	Relationship
Public Comment No. 52-NFPA 70-2024 [New Article after 722]	New Article 723
Public Comment No. 61-NFPA 70-2024 [Section No. 722.111]	Delete 722.111
Public Comment No. 52-NFPA 70-2024 [New Article after 722]	
Public Comment No. 61-NFPA 70-2024 [Section No. 722.111]	

Related Item

- FCR-238

Submitter Information Verification

Submitter Full Name: Stanley Kaufman
Organization: CableSafe, Inc./OFS
Affiliation: Plastics Industry Association (PLASTICS)
Street Address:
City:
State:
Zip:

Submittal Date: Mon Jul 15 02:05:07 EDT 2024
Committee: NEC-P03

Public Comment No. 236-NFPA 70-2024 [Section No. 722.110(A)]

~~**(A)** Application of Listed Communications Raceways in Buildings.~~

~~Permitted and nonpermitted applications of listed communications raceways shall be in accordance with Table 722.110(A) .~~

~~Table 722.110(A) Applications of Listed Communications Raceways in Buildings.~~

~~Applications Listed Communications Raceway Type Plenum Riser General-Purpose In ducts specifically fabricated for environmental air as described in 720.22(B) In fabricated ducts N N N In metal raceway that complies with 300.25(B) N N N In other spaces used for environmental air (plenums) as described in 720.22(C) In other spaces used for environmental air Y N N - In metal raceway that complies with 300.25(C) Y Y Y - In plenum cable routing assemblies N N N - Supported by open metal cable trays Y N N - Supported by solid bottom metal cable trays with solid metal covers Y Y Y In risers In vertical runs Y Y N In metal raceways Y Y Y In fireproof shafts Y Y Y In plenum cable routing assemblies N N N In riser cable routing assemblies N N N In one- and two-family dwellings Y Y Y Within buildings in other than air-handling spaces and risers General Y Y Y In one- and two-family dwellings Y Y Y In multifamily dwellings Y Y Y In nonconcealed spaces Y Y Y Supported by cable trays Y Y Y Under carpet, modular flooring, and planks N N N In distributing frames and cross-connect arrays Y Y Y In any raceway recognized in Chapter 3 Y Y Y In plenum cable routing assemblies N N N In riser cable routing assemblies N N N In general-purpose cable routing assemblies N N N~~

~~Note: An "N" in the table indicates that the communications raceway type shall not be installed in the application. A "Y" indicates that the communications raceway type shall be permitted to be installed in the application, subject to the limitations described in 722.111 and 722.131.~~

Statement of Problem and Substantiation for Public Comment

Communications raceways are outside of the scope of Article 722.

Related Public Comments for This Document

Related Comment	Relationship
Public Comment No. 1567-NFPA 70-2024 [Article 722]	

Related Item

- Global FCR-238

Submitter Information Verification

Submitter Full Name: David Kiddoo
Organization: CCCA
Affiliation: Communications Cable & Connectivity Association
Street Address:
City:
State:
Zip:

Submittal Date: Thu Jul 25 00:39:50 EDT 2024
Committee: NEC-P03

Public Comment No. 911-NFPA 70-2024 [Section No. 722.110(A)]

(A) Application of Listed Communications Raceways in Buildings.

Permitted and nonpermitted applications of listed communications raceways shall be in accordance with Table 722.110(A).

Table 722.110(A) Applications of Listed Communications Raceways in Buildings.

Applications		Listed Communications Raceway Type		
		Plenum	Riser	General-Purpose
In ducts specifically fabricated for environmental air as described in 720.22(B)	In fabricated ducts	N	N	N
	In metal raceway that complies with ~~300~~ 720 .~~25~~ 22 (B)	N	N	N
In other spaces used for environmental air (plenums) as described in 720.22(C)	In other spaces used for environmental air	Y	N	N
	-	In metal raceway that complies with ~~300~~ 720 .~~25~~ 22 (C)	Y	Y	Y
	-	In plenum cable routing assemblies	N	N	N
	-	Supported by open metal cable trays	Y	N	N
	-	Supported by solid bottom metal cable trays with solid metal covers	Y	Y	Y
In risers	In vertical runs	Y	Y	N
	In metal raceways	Y	Y	Y
	In fireproof shafts	Y	Y	Y
	In plenum cable routing assemblies	N	N	N
	In riser cable routing assemblies	N	N	N
	In one- and two-family dwellings	Y	Y	Y
Within buildings in other than air-handling spaces and risers	General	Y	Y	Y
	In one- and two-family dwellings	Y	Y	Y
	In multifamily dwellings	Y	Y	Y
	In nonconcealed spaces	Y	Y	Y
	Supported by cable trays	Y	Y	Y
	Under carpet, modular flooring, and planks	N	N	N
	In distributing frames and cross-connect arrays	Y	Y	Y
	In any raceway recognized in Chapter 3	Y	Y	Y
	In plenum cable routing assemblies	N	N	N
	In riser cable routing assemblies	N	N	N
	In general-purpose cable routing assemblies	N	N	N

Note: An “N” in the table indicates that the communications raceway type shall not be installed in the application. A “Y” indicates that the communications raceway type shall be permitted to be installed in the application, subject to the limitations described in 722.111 and 722.131.

Statement of Problem and Substantiation for Public Comment

Although difficuult to see in Terraview, this comment just changews two references from Article 300 to Article 720, as that was one of the main goals of the Chapter 7/8 work this edition.

Related Public Comments for This Document

Related Comment	Relationship
Public Comment No. 912-NFPA 70-2024 [Section No. 722.110(B)]	

Related Item

- FCR 238

Submitter Information Verification

Submitter Full Name: Ryan Jackson
Organization: Self-employed
Street Address:
City:
State:
Zip:

Submittal Date: Wed Aug 07 14:52:37 EDT 2024
Committee: NEC-P03

Public Comment No. 237-NFPA 70-2024 [Section No. 722.110(B)]

~~**(B)** Application of Listed Cable Routing Assemblies.~~

~~Permitted and nonpermitted applications of listed cable routing assemblies shall be in accordance with Table 722.110(B) .~~

~~Table 722.110(B) Applications of Listed Cable Routing Assemblies in Buildings.~~

~~Applications Listed Cable Routing Assembly Type Plenum Riser General-Purpose In ducts specifically fabricated for environmental air as described in 720.22(B) In fabricated ducts N N N In metal raceway that complies with 300.25(B) N N N In other spaces used for environmental air (plenums) as described in 720.22(C) In other spaces used for environmental air Y N N In metal raceway that complies with 300.25(C) Y Y Y - In plenum cable routing assemblies N N N - Supported by open metal cable trays Y N N - Supported by solid bottom metal cable trays with solid metal covers Y Y Y In risers In vertical runs Y Y N - In metal raceways Y Y Y - In fireproof shafts Y Y Y - In plenum cable routing assemblies N N N - In riser cable routing assemblies N N N - In one- and two-family dwellings Y Y Y Within buildings in other than air-handling spaces and risers General Y Y Y In one- and two-family dwellings Y Y Y In multifamily dwellings Y Y Y In nonconcealed spaces Y Y Y Supported by cable trays Y Y Y Under carpet, modular flooring, and planks N N N In distributing frames and cross-connect arrays Y Y Y In any raceway recognized in Chapter 3 Y Y Y In plenum cable routing assemblies N N N In riser cable routing assemblies N N N In general-purpose cable routing assemblies N N N~~

~~Note: An "N" in the table indicates that the cable routing assembly type shall not be installed in the application. A "Y" indicates that the cable routing assembly type shall be permitted to be installed in the application subject to the limitations described in 722.131.~~

Statement of Problem and Substantiation for Public Comment

Cable routing assemblies are outside of the scope of Article 722.

Related Public Comments for This Document

Related Comment	Relationship
Public Comment No. 1567-NFPA 70-2024 [Article 722]	

Related Item

- Global FCR-238

Submitter Information Verification

Submitter Full Name: David Kiddoo
Organization: CCCA
Affiliation: Communications Cable & Connectivity Association
Street Address:
City:
State:
Zip:

Submittal Date: Thu Jul 25 00:42:57 EDT 2024
Committee: NEC-P03

Public Comment No. 912-NFPA 70-2024 [Section No. 722.110(B)]

(B) Application of Listed Cable Routing Assemblies.

Permitted and nonpermitted applications of listed cable routing assemblies shall be in accordance with Table 722.110(B).

Table 722.110(B) Applications of Listed Cable Routing Assemblies in Buildings.

Applications		Listed Cable Routing Assembly Type		
		Plenum	Riser	General-Purpose
In ducts specifically fabricated for environmental air as described in 720.22(B)	In fabricated ducts	N	N	N
	In metal raceway that complies with ~~300~~ 720 .~~25~~ 22 (B)	N	N	N
In other spaces used for environmental air (plenums) as described in 720.22(C)	In other spaces used for environmental air	Y	N	N
	In metal raceway that complies with ~~300~~ 720 .~~25~~ 22 (C)	Y	Y	Y
	-	In plenum cable routing assemblies	N	N	N
	-	Supported by open metal cable trays	Y	N	N
	-	Supported by solid bottom metal cable trays with solid metal covers	Y	Y	Y
In risers	In vertical runs	Y	Y	N
	-	In metal raceways	Y	Y	Y
	-	In fireproof shafts	Y	Y	Y
	-	In plenum cable routing assemblies	N	N	N
	In riser cable routing assemblies	N	N	N
	-	In one- and two-family dwellings	Y	Y	Y
Within buildings in other than air-handling spaces and risers	General	Y	Y	Y
	In one- and two-family dwellings	Y	Y	Y
	In multifamily dwellings	Y	Y	Y
	In nonconcealed spaces	Y	Y	Y
	Supported by cable trays	Y	Y	Y
	Under carpet, modular flooring, and planks	N	N	N
	In distributing frames and cross-connect arrays	Y	Y	Y
	In any raceway recognized in Chapter 3	Y	Y	Y
	In plenum cable routing assemblies	N	N	N
	In riser cable routing assemblies	N	N	N
	In general-purpose cable routing assemblies	N	N	N

Note: An “N” in the table indicates that the cable routing assembly type shall not be installed in the application. A “Y” indicates that the cable routing assembly type shall be permitted to be installed in the application subject to the limitations described in 722.131.

Statement of Problem and Substantiation for Public Comment

Although difficuult to see in Terraview, this comment just changews two references from Article 300 to Article 720, as that was one of the main goals of the Chapter 7/8 work this edition.

Related Public Comments for This Document

Related Comment	Relationship
Public Comment No. 911-NFPA 70-2024 [Section No. 722.110(A)]	

Related Item

- FCR 238

Submitter Information Verification

Submitter Full Name: Ryan Jackson
Organization: Self-employed
Street Address:
City:
State:
Zip:

Submittal Date: Wed Aug 07 14:55:44 EDT 2024
Committee: NEC-P03

Public Comment No. 1308-NFPA 70-2024 [Section No. 722.111]

~~**722.111** Installation of Raceways, Cable Routing Assemblies, and Cable Trays.~~

~~**(A)** Types of Raceways.~~

~~Wires and cables shall be permitted to be installed in raceways that comply with 722.111(A)(1) , 722.111(A)(2) , or 722.111(A)(3) . Medium-power network-powered broadband communications cables shall not be installed in raceways that comply with 722.111(A)(2) .~~

~~**(1)** Permitted Raceways.~~

~~Wires and raceways shall be permitted to be in any raceway included in Chapter 3 . The raceways shall be installed in accordance with Chapter 3 .~~

~~**(2)** Communications Raceways.~~

~~Wires and cables shall be permitted to be installed in plenum communications raceways, riser communications raceways, and general-purpose communications raceways selected in accordance with Table 722.110(A) , listed in accordance with 722.110(A) , and installed in accordance with 722.131 and 362.24 through 362.56, where the requirements applicable to electrical nonmetallic tubing (ENT) apply.~~

~~**(3)** Innerduct for Communications Wires and Cables, Coaxial Cables, or Network-Powered Broadband Communications Cables.~~

~~Listed plenum communications raceways, listed riser communications raceways, and listed general-purpose communications raceways selected in accordance with Table 722.110(A) shall be permitted to be installed as innerduct in any type of listed raceway permitted in Chapter 3 .~~

~~**(4)** Raceway Fill.~~

~~The raceway fill requirements of 720.6(B)(1) shall apply to medium-power network-powered broadband communications cables.~~

~~**(5)** Permitted Substitutions.~~

~~Substitutions of listed communications raceways shall be permitted in accordance with Table 722.111(A)(5) .~~

~~Table 722.111(A)(5) Permitted Substitutions of Listed Communications Raceways~~

Raceway Type	Permitted Substitution
Riser communications raceway	Plenum communications raceway
General purpose communications raceway	Plenum communications raceway, riser communications raceway

~~**(B)** Cable Routing Assemblies.~~

~~Cables shall be permitted to be installed in plenum cable routing assemblies, riser cable routing assemblies, and general-purpose cable routing assemblies selected in accordance with Table 722.110(B) , listed in accordance with 722.110(B) , and installed in accordance with 722.111(B)(1) , 722.111(B)(2) , and 722.131 .~~

~~**(1)** Horizontal Support.~~

~~Cable routing assemblies shall be supported where run horizontally at intervals not to exceed 900 mm (3 ft) and at each end or joint, unless listed for other support intervals. In no case shall the distance between supports exceed 3 m (10 ft).~~

~~**(2)** Vertical Support.~~

~~Vertical runs of cable routing assemblies shall be supported at intervals not exceeding 1.2 m (4 ft), unless listed for other support intervals, and shall not have more than one joint between supports.~~

~~**(3)** Permitted Substitutions.~~

~~Substitutions of listed cable routing assemblies shall be permitted in accordance with Table 722.111(B)(3) .~~

~~Table 722.111(B)(3) Permitted Substitutions of Listed Communications Raceways~~

Raceway Type	Permitted Substitution
Riser communications raceway	Plenum communications raceway
General purpose communications raceway	Plenum communications raceway, riser communications raceway

~~**(C)** Cable Trays.~~

~~Wires and cables and communications raceways shall be permitted to be installed in metal or listed nonmetallic cable tray systems. Ladder cable trays shall be permitted to support cable routing assemblies.~~

Additional Proposed Changes

File Name	Description	Approved
Limited_Energy_Roster-2026_2nd_Draft.pdf	Limited-Energy Task Group Roster-2nd Draft	

Statement of Problem and Substantiation for Public Comment

This public comment is submitted by the Limited-Energy Task Group (see attached roster) to delete section 722.111 for Raceways, Cable Routing Assemblies, and Cable Trays as these requirements have been relocated to new Article 723 that was created by a companion PC submitted by this Task Group.
See companion PC-1307, 1309, 1310, & 1312.

Related Public Comments for This Document

Related Comment	Relationship
Public Comment No. 1307-NFPA 70-2024 [Section No. 722.110]	Delete section 722.110
Public Comment No. 1309-NFPA 70-2024 [Section No. 722.112]	Delete section 722.112
Public Comment No. 1310-NFPA 70-2024 [Section No. 722.113]	Delete section 722.113
Public Comment No. 1312-NFPA 70-2024 [New Section after 722.182]	NEW Article 723
Public Comment No. 1307-NFPA 70-2024 [Section No. 722.110]	
Public Comment No. 1310-NFPA 70-2024 [Section No. 722.113]	
Public Comment No. 1312-NFPA 70-2024 [New Section after 722.182]	

Related Item

- FCR-238

Submitter Information Verification

Submitter Full Name: Kyle Krueger
Organization: NECA
Affiliation: NECA
Street Address:
City:
State:
Zip:
Submittal Date: Tue Aug 20 13:27:17 EDT 2024
Committee: NEC-P03

Limited Energy Task Group [2nd Draft]					
No.	First Name	Last Name	Class.	Organization	Other Committees
1	Kyle	Krueger	[I/M]	NECA	NEC-Correlating Comittee CMP 3 NFPA 72-Correlating Committee
2	Ernie	Gallo	[U/T]	NEBScore	
3	Derrick	Atkins	[L]	Minneapolis Electrical JA	NEC-Correlating Committee CMP 5
4	Anthony	Tassone	[R/T]	UL Solutions	CMP 3 CMP 16
5	Chad	Jones	[M]	Cisco	CMP 3
6	Sam	Rokowski	[I/M]	Maddox Inc.	CMP 3
7	George	Bish	[M]	Amazon/Ring Protect Inc	CMP 16
8	Trevor	Bowmer	[U]	Telecom Consulting	NEC Correlating Committee CMP 16
9	Ronald	Tellas	[M]	CCCA	CMP 3 CMP 16
10	Tim	Mikloiche	[E]	IAEI	CMP 3
11	Ryan	Jackosn	[M]	Steel Tube Industry	CMP 3
12	Diana	Lettkeman	[M]	Dish	CMP 16
13	John	Kacperski	[L]	IBEW	CMP 16

Public Comment No. 61-NFPA 70-2024 [Section No. 722.111]

~~**722.111** Installation of Raceways, Cable Routing Assemblies, and Cable Trays.~~

~~**(A)** Types of Raceways.~~

~~Wires and cables shall be permitted to be installed in raceways that comply with 722.111(A)(1) , 722.111(A)(2) , or 722.111(A)(3) . Medium-power network-powered broadband communications cables shall not be installed in raceways that comply with 722.111(A)(2) .~~

~~**(1)** Permitted Raceways.~~

~~Wires and raceways shall be permitted to be in any raceway included in Chapter 3 . The raceways shall be installed in accordance with Chapter 3 .~~

~~**(2)** Communications Raceways.~~

~~Wires and cables shall be permitted to be installed in plenum communications raceways, riser communications raceways, and general-purpose communications raceways selected in accordance with Table 722.110(A) , listed in accordance with 722.110(A) , and installed in accordance with 722.131 and 362.24 through 362.56, where the requirements applicable to electrical nonmetallic tubing (ENT) apply.~~

~~**(3)** Innerduct for Communications Wires and Cables, Coaxial Cables, or Network-Powered Broadband Communications Cables.~~

~~Listed plenum communications raceways, listed riser communications raceways, and listed general-purpose communications raceways selected in accordance with Table 722.110(A) shall be permitted to be installed as innerduct in any type of listed raceway permitted in Chapter 3 .~~

~~**(4)** Raceway Fill.~~

~~The raceway fill requirements of 720.6(B)(1) shall apply to medium-power network-powered broadband communications cables.~~

~~**(5)** Permitted Substitutions.~~

~~Substitutions of listed communications raceways shall be permitted in accordance with Table 722.111(A)(5) .~~

~~Table 722.111(A)(5) Permitted Substitutions of Listed Communications Raceways~~

~~Raceway Type Permitted Substitution Riser communications raceway Plenum communications raceway General-purpose communications raceway Plenum communications raceway, riser communications raceway~~

~~**(B)** Cable Routing Assemblies.~~

~~Cables shall be permitted to be installed in plenum cable routing assemblies, riser cable routing assemblies, and general-purpose cable routing assemblies selected in accordance with Table 722.110(B) , listed in accordance with 722.110(B) , and installed in accordance with 722.111(B)(1) , 722.111(B)(2) , and 722.131 .~~

~~**(1)** Horizontal Support.~~

~~Cable routing assemblies shall be supported where run horizontally at intervals not to exceed 900 mm (3 ft) and at each end or joint, unless listed for other support intervals. In no case shall the distance between supports exceed 3 m (10 ft).~~

~~**(2)** Vertical Support.~~

~~Vertical runs of cable routing assemblies shall be supported at intervals not exceeding 1.2 m (4 ft), unless listed for other support intervals, and shall not have more than one joint between supports.~~

~~**(3)** Permitted Substitutions.~~

~~Substitutions of listed cable routing assemblies shall be permitted in accordance with Table 722.111(B)(3) .~~

~~Table 722.111(B)(3) Permitted Substitutions of Listed Communications Raceways~~

~~Raceway Type Permitted Substitution Riser communications raceway Plenum communications raceway General-purpose communications raceway Plenum communications raceway, riser communications raceway~~

~~**(C)** Cable Trays.~~

~~Wires and cables and communications raceways shall be permitted to be installed in metal or listed nonmetallic cable tray systems. Ladder cable trays shall be permitted to support cable routing assemblies.~~

Statement of Problem and Substantiation for Public Comment

This PC coordinates with PC 52 which recommends establishing new Article 723 to cover the installation of cable routing assemblies and communications raceways.

This PC recommends deleting 722.111 since the requirements for the installation on cable routing assemblies and communications raceways in the section are outside the scope of Article 722 (which only covers limited-energy cables). The requirements dealing with permitted raceways are redundant, see 722.112(A)(9) Cable Trays, for example. See also Table 722.120 which includes cable tray requirements.

PC 52 recommends moving the information on installation of cable routing assemblies and communications raceways in 722.110 to new Article 723.

Related Public Comments for This Document

Related Comment	Relationship
Public Comment No. 52-NFPA 70-2024 [New Article after 722]	New Article 723
Public Comment No. 59-NFPA 70-2024 [Section No. 722.110]	Delete 722.110
Public Comment No. 52-NFPA 70-2024 [New Article after 722]	
Public Comment No. 59-NFPA 70-2024 [Section No. 722.110]	

Related Item

- FCR-238

Submitter Information Verification

Submitter Full Name: Stanley Kaufman
Organization: CableSafe, Inc./OFS
Affiliation: Plastics Industry Association (PLASTICS)
Street Address:

City:	
State:	
Zip:	
Submittal Date:	Mon Jul 15 07:51:02 EDT 2024
Committee:	NEC-P03

Public Comment No. 913-NFPA 70-2024 [Section No. 722.111(A)(1)]

(1) Permitted Raceways.

Wires and ~~raceways~~ cables shall be permitted to be in any raceway included in Chapter 3. The raceways shall be installed in accordance with Chapter 3.

Statement of Problem and Substantiation for Public Comment

Placing a raceway inside another raceway is innerduct and is covered in (A)(3). I think this was supposed to be cables, not raceways.

Related Item

- FCR 238

Submitter Information Verification

Submitter Full Name: Ryan Jackson
Organization: Self-employed
Street Address:
City:
State:
Zip:

Submittal Date: Wed Aug 07 14:57:46 EDT 2024
Committee: NEC-P03

Public Comment No. 914-NFPA 70-2024 [Section No. 722.111(A)(4)]

~~**(4)** Raceway Fill.~~

~~The raceway fill requirements of 720.6(B)(1) shall apply to medium-power network-powered broadband communications cables.~~

Statement of Problem and Substantiation for Public Comment

This material is not unique to broadband systems, it applies to all systems within the scope of Article 720. Adding it here but only refering to one type of system generates confusion by making the code user wonder if it was intended to only apply to broadband.

Related Item

- FCR 238

Submitter Information Verification

Submitter Full Name: Ryan Jackson
Organization: Self-employed
Street Address:
City:
State:
Zip:

Submittal Date: Wed Aug 07 15:01:17 EDT 2024
Committee: NEC-P03

Public Comment No. 1309-NFPA 70-2024 [Section No. 722.112]

~~722.112~~

~~Table 722.112 Limited-Energy Cable Type~~

~~Plenum limited-energy cables CMP Communications plenum cables CATVP Community antenna television plenum cables BLP Network-powered broadband communications low-power plenum cables FPLP Power-limited fire alarm plenum cables CL4P Class 4 plenum cables CL3P Class 3 plenum cables CL2P Class 2 plenum cables OFNP Nonconductive optical fiber plenum cables OFCP Conductive optical fiber plenum cables Riser limited-energy cables CMR Communications riser cables - CATVR Community antenna television riser cables BLR Network-powered broadband communications low-power riser cables FPLR Power-limited fire alarm riser cables CL4R Class 4 riser cables CL3R Class 3 riser cables CL2R Class 2 riser cables OFNR Nonconductive optical fiber riser cables OFCR Conductive optical fiber riser cables General-purpose limited-energy cables CMG, CM Communications general-purpose cables - CATV Community antenna television general-purpose cables BL Network-powered broadband communications low-power general-purpose cables FPL Power-limited fire alarm general-purpose cables CL4 Class 4 general-purpose cables PLTC Power-limited tray cables CL3 Class 3 general-purpose cables CL2 Class 2 general-purpose cables OFNG, OFN Nonconductive optical fiber general-purpose cables OFCG, OFC Conductive Optical Fiber general-purpose cables Limited-use limited-energy cables CMX Communications limited use cables - CATVX Community antenna television limited use cables BLX Network-powered broadband communications low-power limited use cables CL3X Class 3 limited use cables CL2X Class 2 limited use cables Specialty use limited-energy cables CMUC Under-carpet communications wires and cables~~

~~(A) General.~~

~~Unless prohibited by this section, plenum, riser, general-purpose, and limited-use limited-energy cables shall be permitted to be installed in the same raceway, cable tray, box, enclosure, or cable routing assembly. Installations shall comply with 722.112(B) through 722.112(H) :~~

~~(B) Two or More Class 2, Class 3, or Class 4 Circuits.~~

~~Conductors of two or more limited energy circuits of the same class shall be permitted within the same limited energy cable.~~

~~(C) (C) Class 2, Class 3, and Class 4 Circuits with the Same Limited Energy Cable.~~

~~(1) Class 3 Cables.~~

~~Class 2 circuits shall be permitted to use listed Class 3 cables.~~

~~(2) Dual-Listed Class 3/Class 4 Cables.~~

~~Class 2 and Class 3 circuits shall be permitted to use dual-listed Class 3/Class 4 cables.~~

~~(D) Class 2 and Class 3 Circuits with Communications Circuits.~~

~~(1) Communications Cables.~~

~~Conductors of one or more Class 2 or Class 3 circuits shall be permitted in the same cable with conductors of communications circuits. The cable shall be listed as a communications cable.~~

~~(2) Composite Cables.~~

~~Cables constructed of individually listed Class 2, Class 3, and communications cables under a common jacket shall be permitted to be classified and listed as communications cables. The fire resistance rating of the composite cable shall be determined by the combustion characteristics of the composite cable.~~

~~(E) Class 2, Class 3, or Class 4 Cables with Other Limited Energy Cables.~~

~~(1) Limited-Use Cables.~~

~~Plenum, riser, general-purpose, and limited use limited energy cables shall be permitted in the same enclosure or raceway.~~

~~(2) Other Than Limited-Use Cables.~~

~~Plenum, riser, and general-purpose limited energy cables shall be permitted in the same enclosure, cable tray, raceway, or cable routing assembly.~~

~~(F) Power-Limited Fire Alarm Circuits.~~

~~(1) Multiple PLFA Circuits.~~

~~Cable and conductors of two or more power-limited fire alarm circuits shall be permitted within the same cable, enclosure, cable tray, raceway, or cable routing assembly.~~

~~(2) With Network-Powered Broadband.~~

~~Low-power network-powered broadband communications circuits shall be permitted in the same enclosure, cable tray, raceway, or cable routing assembly with PLFA cables.~~

~~(3) With Class 2 Circuits.~~

~~Conductors of one or more Class 2 circuits shall be permitted within the same cable, enclosure, cable tray, raceway, or cable routing assembly with conductors of power-limited fire alarm circuits if the insulation of the Class 2 circuit conductors in the cable, enclosure, raceway, or cable routing assembly is at least that required by the power-limited fire alarm circuits.~~

~~(4) With Class 3 or Communications Circuits.~~

~~Cable and conductors of Class 3 and communications circuits shall be permitted within the same cable, enclosure, cable tray, raceway, or cable routing assembly with cables and conductors of power-limited fire alarm circuits.~~

~~(5) With 4 Circuits.~~

~~Class 4 circuits shall be permitted in the same cable with power-limited fire alarm circuits if the cable is dual-listed.~~

~~(6) Audio System Circuits and PLFA Circuits.~~

~~Audio system circuits described in 640.9(C) and installed using Class 2, Class 3, or Class 4 wiring methods in compliance with 722.136 shall not be installed in the same cable, cable tray, raceway, or cable routing assembly with PLFA circuits or cables.~~

~~(G) Manholes.~~

~~Outside plant communications, CATV, and optical fiber cables shall be permitted to be installed together in manholes.~~

~~Informational Note: See IEEE C2-2023, *National Electrical Safety Code,* Rules 323 and 341 for information on cable installation in manholes.~~

~~(H) Limited-Use and Under-Carpet Limited-Energy Cables.~~

~~Limited-use and under-carpet limited-energy cables shall not be installed in cable trays or cable routing assemblies.~~

Additional Proposed Changes

File Name	Description	Approved
Limited_Energy_Roster-2026_2nd_Draft.pdf	Limited-Energy Task Group Roster-2nd Draft	

Statement of Problem and Substantiation for Public Comment

This public comment is submitted on behalf of the Limited-Energy Task Group (see attached roster) to delete section 722.112 as these requirements have been relocated to new section 722.13 created by PC-1684 submitted by this task group to cover limited-energy cable separation requirements in general.

Related Public Comments for This Document

Related Comment	Relationship
Public Comment No. 1684-NFPA 70-2024 [New Section after 722.12]	PC Relaocting these requirements to new Section 722.13
Public Comment No. 1307-NFPA 70-2024 [Section No. 722.110]	
Public Comment No. 1308-NFPA 70-2024 [Section No. 722.111]	
Public Comment No. 1310-NFPA 70-2024 [Section No. 722.113]	
Public Comment No. 1312-NFPA 70-2024 [New Section after 722.182]	
Public Comment No. 1684-NFPA 70-2024 [New Section after 722.12]	

Related Item

- FCR-238

Submitter Information Verification

Submitter Full Name: Kyle Krueger
Organization: NECA
Affiliation: NECA
Street Address:
City:
State:
Zip:

Submittal Date: Tue Aug 20 13:35:16 EDT 2024
Committee: NEC-P03

Public Comment No. 1400-NFPA 70-2024 [Section No. 722.112]

722.~~112~~ 112 Installation of Limited-Energy Cables With Other Circuits.

Table 722.112 Limited-Energy Cable Type

Plenum limited-energy cables	CMP	Communications plenum cables	
	CATVP	Community antenna television plenum cables	
	BLP	Network-powered broadband communications low-power plenum cables	
	FPLP	Power-limited fire alarm plenum cables	
	CL4P	Class 4 plenum cables	
	CL3P	Class 3 plenum cables	
	CL2P	Class 2 plenum cables	
	OFNP	Nonconductive optical fiber plenum cables	
	OFCP	Conductive optical fiber plenum cables	
Riser limited-energy cables	CMR	Communications riser cables	
	-	CATVR	Community antenna television riser cables
		BLR	Network-powered broadband communications low-power riser cables
		FPLR	Power-limited fire alarm riser cables
		CL4R	Class 4 riser cables
		CL3R	Class 3 riser cables
		CL2R	Class 2 riser cables
		OFNR	Nonconductive optical fiber riser cables
		OFCR	Conductive optical fiber riser cables
General-purpose limited-energy cables	CMG, CM	Communications general-purpose cables	
	-	CATV	Community antenna television general-purpose cables
		BL	Network-powered broadband communications low-power general-purpose cables
		FPL	Power-limited fire alarm general-purpose cables
		CL4	Class 4 general-purpose cables
		PLTC	Power-limited tray cables
		CL3	Class 3 general-purpose cables
		CL2	Class 2 general-purpose cables
		OFNG, OFN	Nonconductive optical fiber general-purpose cables
		OFCG, OFC	Conductive Optical Fiber general-purpose cables
Limited-use limited-energy cables	CMX	Communications limited use cables	
	-	CATVX	Community antenna television limited use cables
		BLX	Network-powered broadband communications low-power limited use cables
		CL3X	Class 3 limited use cables
		CL2X	Class 2 limited use cables
Specialty use limited-energy cables	CMUC	Under-carpet communications wires and cables	

(A) General.

Unless prohibited by this section, plenum, riser, general-purpose, and limited-use limited-energy cables shall be permitted to be installed in the same raceway, cable tray, box, enclosure, or cable routing assembly. Installations shall comply with 722.112(B) through 722.112(H).

(B) Two or More Class 2, Class 3, or Class 4 Circuits.

Conductors of two or more limited energy circuits of the same class shall be permitted within the same limited energy cable.

(C) (C) Class 2, Class 3, and Class 4 Circuits with the Same Limited Energy Cable.

(1) Class 3 Cables.

Class 2 circuits shall be permitted to use listed Class 3 cables.

(2) Dual-Listed Class 3/Class 4 Cables.

Class 2 and Class 3 circuits shall be permitted to use dual-listed Class 3/Class 4 cables.

(D) Class 2 and Class 3 Circuits with Communications Circuits.

(1) Communications Cables.

Conductors of one or more Class 2 or Class 3 circuits shall be permitted in the same cable with conductors of communications circuits. The cable shall be listed as a communications cable.

(2) Composite Cables.

Cables constructed of individually listed Class 2, Class 3, and communications cables under a common jacket shall be permitted to be classified and listed as communications cables. The fire resistance rating of the composite cable shall be determined by the combustion characteristics of the composite cable.

(E) Class 2, Class 3, or Class 4 Cables with Other Limited Energy Cables.

(1) Limited-Use Cables.

Plenum, riser, general-purpose, and limited use limited energy cables shall be permitted in the same enclosure or raceway.

(2) Other Than Limited-Use Cables.

Plenum, riser, and general-purpose limited energy cables shall be permitted in the same enclosure, cable tray, raceway, or cable routing assembly.

(F) Power-Limited Fire Alarm Circuits.

(1) Multiple PLFA Circuits.

Cable and conductors of two or more power-limited fire alarm circuits shall be permitted within the same cable, enclosure, cable tray, raceway, or cable routing assembly.

(2) With Network-Powered Broadband.

Low-power network-powered broadband communications circuits shall be permitted in the same enclosure, cable tray, raceway, or cable routing assembly with PLFA cables.

(3) With Class 2 Circuits.

Conductors of one or more Class 2 circuits shall be permitted within the same cable, enclosure, cable tray, raceway, or cable routing assembly with conductors of power-limited fire alarm circuits if the insulation of the Class 2 circuit conductors in the cable, enclosure, raceway, or cable routing assembly is at least that required by the power-limited fire alarm circuits.

(4) With Class 3 or Communications Circuits.

Cable and conductors of Class 3 and communications circuits shall be permitted within the same cable, enclosure, cable tray, raceway, or cable routing assembly with cables and conductors of power-limited fire alarm circuits.

(5) With 4 Circuits.

Class 4 circuits shall be permitted in the same cable with power-limited fire alarm circuits if the cable is dual-listed.

(6) Audio System Circuits and PLFA Circuits.

Audio system circuits described in 640.9(C) and installed using Class 2, Class 3, or Class 4 wiring methods in compliance with 722.136 shall not be installed in the same cable, cable tray, raceway, or cable routing assembly with PLFA circuits or cables.

(G) Manholes.

Outside plant communications, CATV, and optical fiber cables shall be permitted to be installed together in manholes.

Informational Note: See IEEE C2-2023, *National Electrical Safety Code,* Rules 323 and 341 for information on cable installation in manholes.

(H) Limited-Use and Under-Carpet Limited-Energy Cables.

Limited-use and under-carpet limited-energy cables shall not be installed in cable trays or cable routing assemblies.

Statement of Problem and Substantiation for Public Comment

722.112 is missing a title. This PC recommends one.

Related Item

• Global FCR-238

Submitter Information Verification

Submitter Full Name: David Kiddoo
Organization: CCCA
Affiliation: Communications Cable & Connectivity Association
Street Address:
City:
State:
Zip:

Submittal Date: Thu Aug 22 10:03:36 EDT 2024
Committee: NEC-P03

Public Comment No. 258-NFPA 70-2024 [Section No. 722.112(H)]

(H) Limited-Use and ~~Under-Carpet~~ Undercarpet Limited-Energy Cables.

Limited-use and ~~under-carpet~~ undercarpet limited-energy cables shall not be installed in cable trays or cable routing assemblies.

Statement of Problem and Substantiation for Public Comment

There is no hyphen in undercarpet. See 800.170 (G) Type CMUC Undercarpet Wires an Cables

Related Public Comments for This Document

Related Comment	Relationship
Public Comment No. 1567-NFPA 70-2024 [Article 722]	

Related Item

- Globaal FCR-238

Submitter Information Verification

Submitter Full Name: David Kiddoo
Organization: CCCA
Affiliation: Communications Cable & Connectivity Association
Street Address:
City:
State:
Zip:

Submittal Date: Fri Jul 26 09:28:07 EDT 2024
Committee: NEC-P03

Public Comment No. 257-NFPA 70-2024 [Section No. 722.112 [Excluding any Sub-Sections]]

~~Table 722.112 Limited-Energy Cable Type~~

~~Plenum limited-energy cables GMP Communications plenum cables CATVP Community antenna television plenum cables BLP Network-powered broadband communications low-power plenum cables FPLP Power-limited fire alarm plenum cables CL4P Class 4 plenum cables CL3P Class 3 plenum cables CL2P Class 2 plenum cables OFNP Nonconductive optical fiber plenum cables OFCP Conductive optical fiber plenum cables Riser limited-energy cables CMR Communications riser cables - CATVR Community antenna television riser cables BLR Network-powered broadband communications low-power riser cables FPLR Power-limited fire alarm riser cables CL4R Class 4 riser cables CL3R Class 3 riser cables CL2R Class 2 riser cables OFNR Nonconductive optical fiber riser cables OFCR Conductive optical fiber riser cables General-purpose limited-energy cables CMG, CM Communications general-purpose cables - CATV Community antenna television general-purpose cables BL Network-powered broadband communications low-power general-purpose cables FPL Power-limited fire alarm general-purpose cables CL4 Class 4 general-purpose cables PLTG Power-limited tray cables CL3 Class 3 general-purpose cables CL2 Class 2 general-purpose cables OFNG, OFN Nonconductive optical fiber general-purpose cables OFCG, OFC Conductive Optical Fiber general-purpose cables Limited-use limited-energy cables CMX Communications limited use cables - CATVX Community antenna television limited use cables BLX Network-powered broadband communications low-power limited use cables CL3X Class 3 limited use cables CL2X Class 2 limited use cables Specialty use limited-energy cables CMUG Under-carpet communications wires and cables~~

Statement of Problem and Substantiation for Public Comment

Delete Table 722.112. It's redundant. All the information in Table 772.112 is in Table 770.2(B).

Related Public Comments for This Document

Related Comment	Relationship
Public Comment No. 1567-NFPA 70-2024 [Article 722]	

Related Item

- Global FCR-238

Submitter Information Verification

Submitter Full Name: David Kiddoo
Organization: CCCA
Affiliation: Communications Cable & Connectivity Association
Street Address:
City:
State:
Zip:

Submittal Date: Fri Jul 26 09:12:00 EDT 2024
Committee: NEC-P03

Public Comment No. 1310-NFPA 70-2024 [Section No. 722.113]

~~**722.113** Limited-Energy Circuits with Electric Light, Power, Class 1, Non-Power-Limited Fire Alarm, and Medium-Power Network-Powered Broadband Communications Circuits in Raceways, Compartments, and Boxes.~~

~~Separation shall be provided in accordance with 722.112(A) for limited energy cables and conductors, except as provided in 722.164 for optical fiber cables.~~

~~**(A)** General.~~

~~Limited energy cables shall be separated by at least 50 mm (2 in.) from conductors of any electric light, power, Class 1, non-power-limited fire alarm, or medium-power network-powered broadband communications circuits and shall not be placed the same raceway, compartment, enclosure, manhole, outlet box, device box, or similar, unless permitted by the 722.113(A)(1) through 722.113(A)(10) :~~

~~*Exception: Low-power and medium-power network-powered broadband communications circuit cables shall be permitted in the same raceway, cable tray, box, enclosure, or cable routing assembly.*~~

~~**(1)** Separated by Barriers.~~

~~Limited energy cables shall be permitted to be placed in any raceway, compartment, outlet box, junction box, or other enclosure with conductors of electric light, power, Class 1, non-power-limited fire alarm, or medium-power network-powered broadband communications circuits if the conductors of electric light, power, Class 1, non-power-limited fire alarm, and medium-power network-powered broadband communications circuits are separated from the limited energy and cables by a permanent barrier that maintains the 50 mm (2 in.) separation or a listed divider.~~

~~**(2)** Raceways Within Enclosures.~~

~~Limited energy cables shall be permitted to share the same enclosure with other systems if the limited energy cables are separated by a raceway within the enclosure.~~

~~**(3)** Associated Systems Within Enclosures.~~

~~Limited energy cables shall be permitted to be placed in outlet boxes, junction boxes, compartments, or similar with power conductors where such conductors are introduced solely for power supply to the limited energy equipment and 722.113(A)(3)(a) or 722.113(A)(3)(b) applies.~~

~~(a) The power circuit conductors shall be routed within the enclosure to maintain a minimum 6 mm (0.25 in.) separation from the limited energy cables.~~

~~(b) The circuit conductors operate at 150 volts or less to ground and the limited energy circuit conductors shall be either of the following:~~

~~(3) Installed as a Class 1 circuit~~

~~(4) A limited energy cable of CL3, CL3R, CL3P or a permitted substitute and the conductors that emerge from the cable jacket are separated by a minimum 6 mm (0.25 in.) or by a nonconductive barrier from all other conductors~~

~~**(4)** Enclosures with Single Opening.~~

~~Circuit conductors of limited energy cables entering compartments, enclosures, device boxes, outlet boxes, or similar shall be permitted to be installed with Class 1, non-power-limited fire alarm, and medium-power network-powered broadband communications circuits where they are introduced solely to connect the equipment connected to the limited energy circuits. If the limited energy circuit conductors must enter an enclosure that is provided with a single opening, they shall be permitted to enter through a single fitting (such as a tee) if the conductors are separated from the conductors of the other circuits by a continuous and firmly fixed nonconductor, such as flexible tubing.~~

~~**(5)** Elevators.~~

~~(a) *Traveling Cables* . Separation of circuits shall not be required in elevator traveling cables constructed in accordance with 620.36 .~~

~~(b) *Hoistways* . In hoistways, cables shall be installed in rigid metal conduit, rigid nonmetallic conduit, intermediate metal conduit, liquidtight flexible nonmetallic conduit, or electrical metallic tubing. For elevators or similar equipment, these conductors shall be permitted to be installed as provided in 620.21 .~~

~~**(6)** In Raceways or Cables.~~

~~Separation shall not be required if either of the following applies:~~

~~(1) The conductors of electric light, power, Class 1, non-power-limited fire alarm, and medium-power network-powered broadband communications circuits are in a raceway or in metal-sheathed, metal-clad, nonmetallic-sheathed, Type AC or Type UF cables.~~

~~(2) The limited energy cable conductors are installed in a raceway or in metal-sheathed, metal-clad, nonmetallic-sheathed, Type TC, or Type UF cables.~~

~~**(7)** Protected by Firmly Fixed Nonconductors.~~

~~Separation shall not be required if the limited energy cables are permanently separated from the conductors of electric light, power, Class 1, non-power-limited fire alarm, and medium-power network-powered broadband communications circuits by a continuous and firmly fixed nonconductor, such as porcelain tubes or flexible tubing, in addition to the insulation on the wire.~~

~~**(8)** Manholes.~~

~~Underground limited energy circuit conductors and cables in a manhole shall be permitted to be installed with Class 1, non-power-limited fire alarm, and medium-power network-powered broadband communications circuits if one of the following conditions is met:~~

~~(1) The electric light, power, Class 1, non-power-limited fire alarm, and medium-power network-powered broadband communications circuit conductors are in a metal-enclosed cable or Type UF cable.~~

~~(2) The limited energy circuit conductors are permanently and effectively separated from the conductors of other circuits by a continuous and firmly fixed nonconductor, such as flexible tubing, in addition to the insulation or covering on the wire.~~

~~(3) The limited energy circuit conductors are permanently and effectively separated from conductors of the other circuits and securely fastened to racks, insulators, or other approved supports.~~

~~**(9)** Cable Trays.~~

~~Limited energy circuit conductors shall be permitted to be installed in cable trays if the conductors of the electric light, Class 1, and non-power-limited fire alarm circuits are separated by a solid fixed barrier of a material compatible with the cable tray or if the limited energy circuits are installed in Type MC cable.~~

~~**(10)** If Protected.~~

~~Limited energy circuits shall be permitted to be installed together with the conductors of electric light, power, Class 1, non-power-limited fire alarm, and medium-power network-powered broadband communications circuits if they are functionally associated and installed using Class 1 wiring methods in accordance with 724.46.~~

Additional Proposed Changes

File Name	Description	Approved
Limited_Energy_Roster-2026_2nd_Draft.pdf	Limited-Energy Task Group Roster-2nd Draft	

Statement of Problem and Substantiation for Public Comment

This public comment is submitted by the Limited-Energy Task Group (see attached roster) to delete section 722.113 for Raceways, Cable Routing Assemblies, and Cable Trays as these requirements have been relocated to new Article 723 that was created by a companion PC submitted by this Task Group.
See companion PC-1307, 1308, 1309 & 1312.

Related Public Comments for This Document

Related Comment	Relationship
Public Comment No. 1307-NFPA 70-2024 [Section No. 722.110]	Delete section 722.110
Public Comment No. 1308-NFPA 70-2024 [Section No. 722.111]	Delete section 722.111
Public Comment No. 1309-NFPA 70-2024 [Section No. 722.112]	Delete section 722.112
Public Comment No. 1312-NFPA 70-2024 [New Section after 722.182]	NEW Article 723
Public Comment No. 1307-NFPA 70-2024 [Section No. 722.110]	
Public Comment No. 1308-NFPA 70-2024 [Section No. 722.111]	
Public Comment No. 1312-NFPA 70-2024 [New Section after 722.182]	

Related Item

- FCR-238

Submitter Information Verification

Submitter Full Name: Kyle Krueger
Organization: NECA
Affiliation: NECA
Street Address:
City:
State:
Zip:

Submittal Date: Tue Aug 20 13:36:20 EDT 2024
Committee: NEC-P03

Public Comment No. 915-NFPA 70-2024 [Section No. 722.113(A) [Excluding any Sub-Sections]]

Limited energy cables shall be separated by at least 50 mm (2 in.) from conductors of any electric light, power, Class 1, non-power-limited fire alarm, or medium-power network-powered broadband communications circuits and shall not be placed the same raceway, compartment, enclosure, manhole, outlet box, device box, or similar, unless permitted ~~by the~~ by 722.113(A)(1) through 722.113(A)(10).

Exception: Low-power and medium-power network-powered broadband communications circuit cables shall be permitted in the same raceway, cable tray, box, enclosure, or cable routing assembly.

Statement of Problem and Substantiation for Public Comment

Fixing a typo.

Related Item

- FCR 238

Submitter Information Verification

Submitter Full Name: Ryan Jackson
Organization: Self-employed
Street Address:
City:
State:
Zip:

Submittal Date: Wed Aug 07 15:13:41 EDT 2024
Committee: NEC-P03

Public Comment No. 1414-NFPA 70-2024 [Section No. 722.120]

722.120 Application and Installation of Limited Energy Cables in Buildings.

The application and installation of limited-energy cables shall comply with Table 722.120.

Table 722.120 Applications of Limited-Energy Cables

Applications		Cable Type[1]						
		Plenum	Riser	General-Purpose	Limited-Use	Under Carpet	PLTC	
In ducts specifically fabricated for environmental air as described in 720.22(C)[2]	Cables in lengths as short as practicable to perform the required function	Y	N	N	N	N	N	
	In metal raceway that complies with 720.22(B)	Y	Y	Y	Y	N	Y	
In other spaces used for environmental air (plenums) as described in 720.22(C)	Cables in other spaces used for environmental air	Y	N	N	N	N	N	
	Cables in metal raceway that complies with 720.22(C)	Y	Y	Y	Y	N	Y	
	Cables in plenum communications raceways	Y	N	N	N	N	N	
	-	Cables in plenum cable routing assemblies	Y	N	N	N	N	N
	-	Cables supported by open metal cable trays	Y	N	N	N	N	N
	-	Cables, or cables installed in raceways or cable routing assemblies supported by solid bottom metal cable trays with solid metal covers	Y	Y	Y	Y	N	Y
In risers and vertical runs	Cables in vertical runs penetrating one or more floors and in vertical runs in a shaft	Y	Y	N	N	N	N	
	-	Cables in metal raceways	Y	Y	Y	Y	N	Y
	-	Cables in fireproof shafts	Y	Y	Y	N	N	Y
	-	Cables in plenum communications raceways	Y	Y	N	N	N	N
	-	Cables in plenum cable routing assemblies	Y	Y	N	N	N	N
	-	Cables in riser communications raceways	Y	Y	N	N	N	N
	-	Cables in riser cable routing assemblies	Y	Y	N	N	N	N
	-	Cables in one- and two-family dwellings	Y	Y	Y	Y[3]	N	Y
Cables and innerducts installed in metal raceways in a riser having firestops at each floor[2]	Cables	Y	Y	Y	Y	N	Y	
	Cables in plenum communications raceways (innerduct)	Y	Y	Y	Y	N	Y	
	Cables in riser communications raceways (innerduct)	Y	Y	Y	Y	N	Y	
	Cables in general-purpose communications raceways (innerduct)	Y	Y	Y	Y	N	Y	
In fireproof riser shafts having firestops at each floor[2]	Cables	Y	Y	Y	N	N	Y	
	Cables in plenum communications raceways or plenum cable routing assemblies	Y	Y	Y	N	N	Y	
	Cables in riser communications raceways or riser cable routing assemblies	Y	Y	Y	N	N	Y	
	-	Cables in general-purpose communications raceways or general-purpose cable routing assemblies	Y	Y	Y	N	N	Y
In cable trays	Outdoors	N	N	N	N	N	Y	
	Cables, or cables in plenum, riser, or general-purpose communications raceways, installed indoors	Y	Y	Y	N	N	Y	
In cross-connect arrays	Cables, and cables in plenum, riser, or general-purpose communications raceways or cable routing assemblies	Y	Y	Y	N	N	Y	
In one-, two-, and multifamily dwellings, and in building locations other than the locations covered above	Cables	Y	Y	Y	Y[3]	N	Y	
	Cables in plenum, riser, or general-purpose communications raceways or cable routing assemblies, or raceways recognized in Chapter 3	Y	Y	Y	Y	N	Y	
	-	Cables in nonconcealed spaces	Y	Y	Y	Y[4]	Y	Y
	-	Under carpet, floor covering, modular flooring, and planks	N	N	N	N	Y	N

[1]"N" indicates that the cable type shall not be installed in the application. "Y" indicates that the cable type shall be permitted to be installed in the application, subject to any limitations described in this article or the articles described in 722.4(C).

[2]In 720.22(B), cables shall be permitted in ducts specifically fabricated for environmental air only if directly associated with the air distribution system.

[3]Limited-use cable shall be permitted to be installed only in one-, two-, and multifamily dwellings and only if the cable is smaller in diameter than 6.35 mm (0.25 in.).

[4]The exposed length of cable shall not exceed 3.05 m (10 ft).

Informational Note: See UL 13, *Standard for Power-Limited Circuit Cables*, *for applicable requirements for listing of Class 2 and Class 3 cables and power-limited tray cable (PLTC).*

Additional Proposed Changes

File Name	Description	Approved
Limited_Energy_Roster-2026_2nd_Draft.pdf	Limited-Energy Task Group Roster-2nd Draft	

Statement of Problem and Substantiation for Public Comment

This public comment is submitted on behalf of the Limited-Energy Task Group (see attached roster) to relocate the Informational Note No.1 to new location after section/table 722.120(A). See companion PC-1413.

Related Public Comments for This Document

Related Comment	Relationship
Public Comment No. 1413-NFPA 70-2024 [Section No. 722.100(A) [Excluding any Sub-Sections]]	PC deleting the info note from 722.100(A) as it is relocated to 722.120
Public Comment No. 1413-NFPA 70-2024 [Section No. 722.100(A) [Excluding any Sub-Sections]]	

Related Item

- FCR-238

Submitter Information Verification

Submitter Full Name: Kyle Krueger
Organization: NECA
Affiliation: NECA
Street Address:
City:
State:
Zip:

Submittal Date: Thu Aug 22 15:06:16 EDT 2024
Committee: NEC-P03

Public Comment No. 245-NFPA 70-2024 [Section No. 722.120]

722.120 Application and Installation of Limited- Energy Cables in Buildings.

The application and installation of limited-energy cables in buildings shall comply with Table 722.120.

~~Table 722.120 Applications of Limited-Energy Cables~~

~~Applications Cable Type [1] Plenum Riser General-Purpose Limited-Use Under Carpet PLTC In ducts specifically fabricated for environmental air as described in 720.22(C) [2] Cables in lengths as short as practicable to perform the required function Y N N N N N In metal raceway that complies with 720.22(B) Y Y Y Y Y N Y In other spaces used for environmental air (plenums) as described in 720.22(C) Cables in other spaces used for environmental air Y N N N N N N Cables in metal raceway that complies with 720.22(C) Y Y Y Y Y N Y Cables in plenum communications raceways Y N N N N N N - Cables in plenum cable routing assemblies Y N N N N N N - Cables supported by open metal cable trays Y N N N N N N - Cables, or cables installed in raceways or cable routing assemblies supported by solid bottom metal cable trays with solid metal covers Y Y Y Y Y N Y In risers and vertical runs Cables in vertical runs penetrating one or more floors and in vertical runs in a shaft Y Y N N N N N - Cables in metal raceways Y Y Y Y Y N Y - Cables in fireproof shafts Y Y Y N N Y - Cables in plenum communications raceways Y Y N N N N N - Cables in plenum cable routing assemblies Y Y N N N N N - Cables in riser communications raceways Y Y N N N N N - Cables in riser cable routing assemblies Y Y N N N N N - Cables in one- and two-family dwellings Y Y Y Y Y [3] N Y Cables and innerducts installed in metal raceways in a riser having firestops at each floor [2] Cables Y Y Y Y Y N Y Cables in plenum communications raceways (innerduct) Y Y Y Y Y N Y Cables in riser communications raceways (innerduct) Y Y Y Y Y N Y Cables in general-purpose communications raceways (innerduct) Y Y Y Y Y N Y In fireproof riser shafts having firestops at each floor [2] Cables Y Y Y N N Y Cables in plenum communications raceways or plenum cable routing assemblies Y Y Y N N Y Cables in riser communications raceways or riser cable routing assemblies Y Y Y N N Y - Cables in general-purpose communications raceways or general-purpose cable routing assemblies Y Y Y N N Y In cable trays Outdoors N N N N N Y Cables, or cables in plenum, riser, or general-purpose communications raceways, installed indoors Y Y Y N N Y In cross-connect arrays Cables, and cables in plenum, riser, or general-purpose communications raceways or cable routing assemblies Y Y Y N N Y In one-, two-, and multifamily dwellings, and in building locations other than the locations covered above Cables Y Y Y Y [3] N Y Cables in plenum, riser, or general-purpose communications raceways or cable routing assemblies, or raceways recognized in Chapter 3 Y Y Y Y N Y - Cables in nonconcealed spaces Y Y Y Y [4] Y Y - Under carpet, floor covering, modular flooring, and planks N N N N Y N~~

~~[1] "N" indicates that the cable type shall not be installed in the application. "Y" indicates that the cable type shall be permitted to be installed in the application, subject to any limitations described in this article or the articles described in 722.4(C).~~

~~[2] In 720.22(B), cables shall be permitted in ducts specifically fabricated for environmental air only if directly associated with the air distribution system.~~

~~[3] Limited-use cable shall be permitted to be installed only in one-, two-, and multifamily dwellings and only if the cable is smaller in diameter than 6.35 mm (0.25 in.).~~

~~[4] The exposed length of cable shall not exceed 3.05 m (10 ft).~~

~~INSERT NEW REVISED TABLE 722.120.~~

Additional Proposed Changes

File Name	Description	Approved
new_Table_722.120_08032024.docx	new Table 722.120	

Statement of Problem and Substantiation for Public Comment

This PC recommends replacing the Table 722.120 in the First Revision with a reformatted table that coordinates with the list of limited power cables in new table 722.22(A) in PC 127.

This PC consolidates four cable application tables into one table. It replaces:

Table 722.120 Applications of Limited-Energy Cables

Table 722.130 Applications of Listed Communications Wires, Cables, Listed CATV-Type Coaxial Cables, and Listed Network-Powered Broadband Communications Cables in Buildings

Table 722.160 Applications of Listed Optical Fiber Cables in Buildings

Table 722.170 Applications of Listed PLFA Cables in Buildings

Related Public Comments for This Document

Related Comment	Relationship
Public Comment No. 1567-NFPA 70-2024 [Article 722]	

Related Item

- Global FCR-238

Submitter Information Verification

Submitter Full Name: David Kiddoo
Organization: CCCA
Affiliation: Communications Cable & Connectivity Association
Street Address:
City:
State:
Zip:
Submittal Date: Thu Jul 25 12:21:48 EDT 2024
Committee: NEC-P03

Table 722.120 Applications of Limited-Energy Cables in Buildings

Applications		Listed Limited-Energy Cable Type						
		Plenum Cables	Riser Cables	General Purpose Cables	Limited-Use Cables	Outdoor Cables		Undercarpet Cable
						PLTC	CL4Z & BLU	
In ducts specifically fabricated for environmental air as described in 720.22(B)	In fabricated ducts	Y	N	N	N	Y	N	N
	In metal raceway that complies with 300.25(B)	Y	Y	Y	Y	N	N	N
In other spaces used for environmental air (plenums) as described in 720.22(C)	In other spaces used for environmental air	Y	N	N	N	Y	N	N
	In metal raceway that complies with 300.25(C)	Y	Y	Y	Y	Y	N	N
	In plenum communications raceways	Y	N	N	N	N	N	N
	In plenum cable routing assemblies	Y	N	N	N	N	N	N
	Supported by open metal cable trays	Y	N	N	N	N	N	N
	Supported by solid bottom metal cable trays with solid metal covers	Y	Y	Y	Y	Y	N	N
In risers	In vertical runs	Y	Y	N	N	N	N	N
	In metal raceways	Y	Y	Y	Y	Y	N	N
	In fireproof shafts	Y	Y	Y	Y	Y	N	N
	In plenum communications raceways	Y	Y	N	N	N	N	N
	In plenum cable routing assemblies	Y	Y	N	N	N	N	N
	In riser communications raceways	Y	Y	N	N	N	N	N

	In riser cable routing assemblies	Y	Y	N	N	N	N	N
	In one- and two-family dwellings	Y	Y	Y	Y	Y	N	N
Within buildings in other than air-handling spaces and risers	General	Y	Y	Y	Y	Y	N	N
	In one- and two-family dwellings	Y	Y	Y	Y	Y	N	Y
	In multifamily dwellings	Y	Y	Y	Y	Y	N	Y
	In nonconcealed spaces	Y	Y	Y	Y	Y	N	Y
	Supported by cable trays	Y	Y	Y	N	Y	N	N
	Under carpet, modular flooring and planks	N	N	N	N	N	N	N
	In distributing frames and cross-connect arrays	Y	Y	Y	N	N	N	Y
	In any raceway recognized in Chapter 3	Y	Y	Y	Y	Y	N	N
	In plenum communications raceways	Y	Y	Y	N	Y	N	N
	In plenum cable routing assemblies	Y	Y	Y	N	Y	N	N
	In riser communications raceways	Y	Y	Y	N	Y	N	N
	In riser cable routing assemblies	Y	Y	Y	N	Y	N	N
	In general-purpose communications raceways	Y	Y	Y	N	Y	N	N
	In general-purpose cable routing assemblies	Y	Y	Y	N	Y	N	N

Note: An ‘N’ in the table indicates that the cable type shall not be permitted to be installed in the application. A ‘Y*’ indicates that the cable type is permitted to be installed in the application, subject to the limitations of the installation rules.

Informational Note: One example of the installation rules restricting the installation of cables, is the use of plenum cables in fabricated ducts. Table 722.120 has a “Y” for the installation of plenum cables in these ducts, but 720.22(B)(1) only permits cabling directly associated with the direct action upon or sensing of the contained air, while 720.22(B)(2) limits the length of the cable to 4 ft.

Public Comment No. 1851-NFPA 70-2024 [Section No. 722.121(A)]

(A) Industrial Establishments.

In industrial establishments where the conditions of maintenance and supervision ensure that only qualified persons service the installation, Type PLTC cable shall be permitted in accordance with either of the following:

(1) Where the cable is not subject to physical damage, Type PLTC cable that complies with the crush and impact requirements of Type MC cable and is identified as Type PLTC-ER for such use shall be permitted to be exposed between ~~the~~ a cable tray, raceway, or enclosure and the utilization equipment or device. The cable shall be continuously supported and protected against physical damage using mechanical protection such as dedicated struts, angles, or channels. The cable shall be supported and secured at intervals not exceeding 1.8 m (6 ft). Where not subject to physical damage, Type PLTC-ER cable shall be permitted to transition between cable trays, raceways, and enclosures, and between a cable ~~trays~~ tray, raceway, and enclosure and utilization equipment or devices for a distance not to exceed 1.8 m (6 ft) without continuous support. The cable shall be mechanically supported where exiting the cable tray to ensure that the minimum bending radius is not exceeded.

(2) Type PLTC cable, with a metallic sheath or armor in accordance with 722.100(A)(6), shall be permitted to be installed exposed. The cable shall be continuously supported and protected against physical damage using mechanical protection such as dedicated struts, angles, or channels. The cable shall be secured at intervals not exceeding 1.8 m (6 ft).

Statement of Problem and Substantiation for Public Comment

The proposed text would provide consistency of permitted installation practices of PLTC-ER with similar changes done in 336.10 (FR8221) and proposed text in PC1846 regarding TC-ER with raceways and enclosures.

Related Public Comments for This Document

Related Comment	Relationship
Public Comment No. 1846-NFPA 70-2024 [Section No. 336.10]	

Related Item

- FR8221

Submitter Information Verification

Submitter Full Name: Jay Tamblingson
Organization: Rockwell Automation
Street Address:
City:
State:
Zip:

Submittal Date: Tue Aug 27 17:28:01 EDT 2024
Committee: NEC-P03

Public Comment No. 259-NFPA 70-2024 [Section No. 722.122]

722.122 Limited-Energy Cable Substitutions.

The substitutions for cables listed in Table 722.120 and illustrated in Figure 722.122 shall be permitted. Where substitute cables are installed, the installation requirements of the articles described in 722.4 shall also apply. CI cables shall be permitted to be installed to provide 2-hour circuit integrity. See 722.180(A).

Informational Note: See 722.100 for information on Types CMP, CMR, CM, and CMX.

~~Table 722.122 Permitted Limited-Energy Cable Substitutions~~

~~Cable Type Permitted Substitutions CL3P CMP CL2P CMP, CL3P CL3R CMP, CL3P, CMR CL2R CMP, CL3P, CL2P, CMR, CL3R PLTC None CL3 CMP, CL3P, CMR, CL3R, CMG, CM, PLTC CL2 CMP, CL3P, CL2P, CMR, CL3R, CL2R, CMG, CM, PLTC, CL3 CL3X CMP, CL3P, CMR, CL3R, CMG, CM, PLTC, CL3, CMX CL2X CMP, CL3P, CL2P, CMR, CL3R, CL2R, CMG, CM, PLTC, CL3, CL2, CMX, CL3X FPLP CMP FPLR CMP, FPLP, CMR FPL CMP, FPLP, CMR, FPLR, CMG, CM OFNP None OFCP OFNP OFNR OFNP OFCR OFNP, OFCP, OFNR OFNG, OFN OFNP, OFNR OFCG, OFC OFNP, OFCP, OFNR, OFCR, OFNG, OFN CMUC None~~

Figure 722.122 Limited-Energy and Communications Cable Substitution Hierarchy.

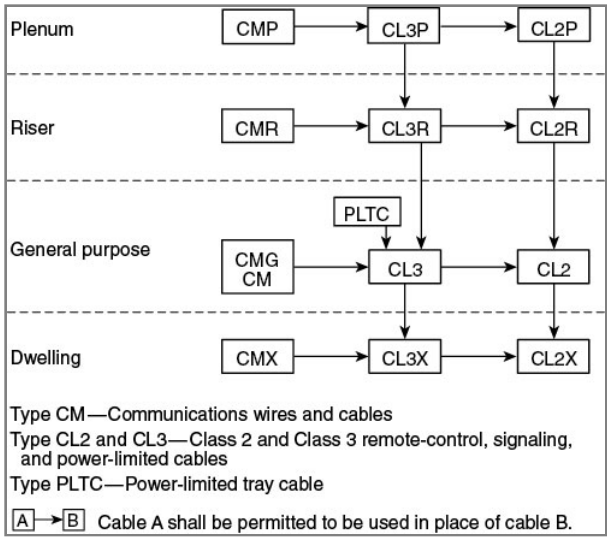

Additional Proposed Changes

File Name	Description	Approved
Revised_Table_722.122_07272024.docx	Revised Table 722.122	

Statement of Problem and Substantiation for Public Comment

Table 722.122 is incomplete. Replace it with the attached revised table.

Related Public Comments for This Document

Related Comment	Relationship
Public Comment No. 1567-NFPA 70-2024 [Article 722]	

Related Item

- Global FCR-238

Submitter Information Verification

Submitter Full Name: David Kiddoo
Organization: CCCA
Affiliation: Communications Cable & Connectivity Association
Street Address:
City:
State:
Zip:

Submittal Date: Fri Jul 26 10:56:05 EDT 2024
Committee: NEC-P03

Table 722.122 Permitted Limited-Energy Cable Substitutions

Cable Type	Cable Type	Permitted Substitutions
Plenum Cables	CL4P	None
	CL3P	CMP
	CL2P	CMP, CL3P
	CMP	None
	CATVP	CMP, BLP
	BLP	CMP, CL3P
	OFNP	None
	OFCP	OFNP
	FPLP	CMP
Riser Cables	CL4R	CL4P
	CL3R	CMP, CL3P, CMR
	CL2R	CMP, CL3P, CL2P, CMR, CL3R
	CMR	CMP
	CATVR	CATVP, CMP, CMR, BMR, BLP, BLR
	BLR	CMP, CL3P, CMR, CL3R, BLP, BMR
	OFNR	OFNP
	OFCR	OFNP, OFCP
	FPLR	CMP, FPLP, CMR
General-Purpose Cables	CL4	CL4P, CL4R
	CL3	CMP, CL3P, CMR, CL3R, CMG, CM, PLTC
	CL2	CMP, CL3P, CL2P, CMR, CL3R, CL2R, CMG, CM, PLTC, CL3
	CM	CMP, CMR, CMG
	CATV	CATVP, CMP, CATVR, CMR, CMG, CM, BMR, BLP, BLR, BL
	BL	CMP, CMR, CM, CMG, CL3P, CL3R, CL3, BMR, BM, BLP, BLR
	OFN	OFNP, OFNR
	OFC	OFNP, OFCP, OFNR, OFCR, OFNG, OFN
	FPL	CMP, FPLP, CMR, FPLR, CMG, CM
Alternative General-Purpose Cables		
	CMG	CMP, CMR, CM
	OFNG	OFNP, OFNR, OFN
	OFCG	OFNP, OFCP, OFNR, OFCR, OFNG, OFN
Limited- Use Cables		
	CL3X	CMP, CL3P, CMR, CL3R, CMG, CM, PLTC, CL3, CMX
	CL2X	CMP, CL3P, CL2P, CMR, CL3R, CL2R, CMG, CM, PLTC, CL3, CL2, CMX, CL3X
	CMX	CMP, CMR, CM, CMG
	CATVX	CATVP, CMP, CATVR, CMR, CATV, CMG, CM, BMR, BM, BLP, BLR, BL, BLX
	BLX	CMP, CMR, CM, CMG, CMX, CL3P, CL3R, CL3, CL3X, BMR, BM, BLP, BLR, BM, BL

Outdoor Cables	PLTC	None
	CL4Z	None
	BLU	None
Undercarpet Cables	CMUC	None

Public Comment No. 260-NFPA 70-2024 [Section No. 722.122]

722.122 Limited-Energy Cable Substitutions.

The substitutions for cables listed in Table 722.120 and illustrated in Figure 722.122 shall be permitted. Where substitute cables are installed, the installation requirements of the articles described in 722.4 shall also apply. CI cables shall be permitted to be installed to provide 2-hour circuit integrity. See 722.180(A).

Informational Note: See 722.100 for information on Types CMP, CMR, CM, and CMX.

Table 722.122 Permitted Limited-Energy Cable Substitutions

Cable Type	Permitted Substitutions
CL3P	CMP
CL2P	CMP, CL3P
CL3R	CMP, CL3P, CMR
CL2R	CMP, CL3P, CL2P, CMR, CL3R
PLTC	None
CL3	CMP, CL3P, CMR, CL3R, CMG, CM, PLTC
CL2	CMP, CL3P, CL2P, CMR, CL3R, CL2R, CMG, CM, PLTC, CL3
CL3X	CMP, CL3P, CMR, CL3R, CMG, CM, PLTC, CL3, CMX
CL2X	CMP, CL3P, CL2P, CMR, CL3R, CL2R, CMG, CM, PLTC, CL3, CL2, CMX, CL3X
FPLP	CMP
FPLR	CMP, FPLP, CMR
FPL	CMP, FPLP, CMR, FPLR, CMG, CM
OFNP	None
OFCP	OFNP
OFNR	OFNP
OFCR	OFNP, OFCP, OFNR
OFNG, OFN	OFNP, OFNR
OFCG, OFC	OFNP, OFCP, OFNR, OFCR, OFNG, OFN
CMUC	None

Figure 722.~~122 Limited-Energy and Communications~~ 122 Communications, Class 3, Class 2, and PLTC Cable Substitution Hierarchy.

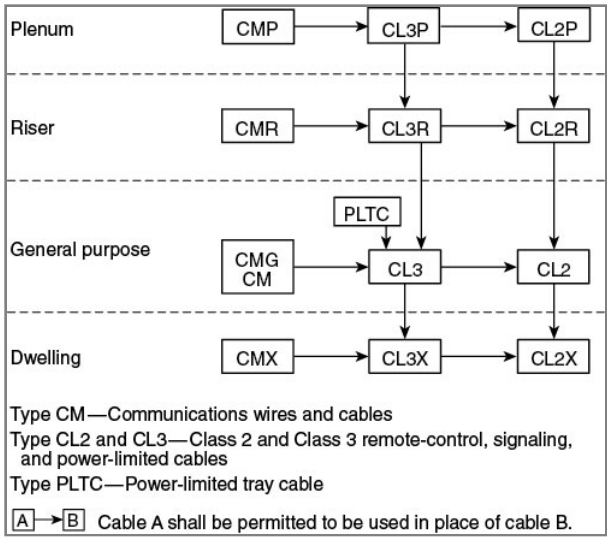

Statement of Problem and Substantiation for Public Comment

The title of Figure 722.122 should be revised to accurately describe what cables are in the figure. Not all limited-energy cables are in the figure, so using the term "limited-energy" in the title is too broad.

Related Public Comments for This Document

Related Comment	Relationship
Public Comment No. 1567-NFPA 70-2024 [Article 722]	

Related Item

- Global FCR-238

Submitter Information Verification

Submitter Full Name: David Kiddoo
Organization: CCCA

Affiliation: Communications Cable & Connectivity Association
Street Address:
City:
State:
Zip:
Submittal Date: Fri Jul 26 11:12:53 EDT 2024
Committee: NEC-P03

Public Comment No. 1367-NFPA 70-2024 [Section No. 722.130]

722.130 Application of Cables Used for Communications Circuits, Communications Wires, Cables, and Raceways and Listed Cable Routing Assemblies.

Permitted and nonpermitted applications of listed communications wires and cables, coaxial cables, network-powered broadband communications system cables shall be in accordance with Table 722.130.

The permitted applications shall be subject to the installation requirements of ~~722.110~~ ~~.~~ Article 723, Parts II, III, and IV.

Table 722.130 Applications of Listed Communications Wires, Cables, Listed CATV-Type Coaxial Cables, and Listed Network-Powered Broadband Communications Cables in Buildings

Applications		Wire and Cable Type									
		Plenum	Riser	BMR	General-Purpose	BM	Limited-Use	Under-carpet	BMU, BLU	Hybrid Power and Communications Cables	Communications Wires
In ducts specifically fabricated for environmental air as described in 720.22(B)	In fabricated ducts	Y	N	N	N	N	N	N	N	N	N
	In metal raceway that complies with 720.22(B)	Y	Y	Y	Y	Y	Y	N	N	N	Y
In other spaces used for environmental air (plenums) as described in 720.22(C)	In other spaces used for environmental air	Y	N	N	N	N	N	N	N	N	N
	In metal raceway that complies with 720.22(C)	Y	Y	Y	Y	Y	Y	N	N	N	Y
	-	In plenum communications raceways	Y	N	N	N	N	N	N	N	N
	-	In plenum cable routing assemblies	Y	N	N	N	N	N	N	N	N
	-	Supported by open metal cable trays	Y	N	N	N	N	N	N	N	N
	-	Supported by solid bottom metal cable trays with solid metal covers	Y	Y	Y	Y	Y	Y	N	N	N
In risers	In vertical runs	Y	Y	Y	N	N	N	N	N	N	N
	-	In metal raceways	Y	Y	Y	Y	Y	Y	N	N	N
	-	In fireproof shafts	Y	Y	Y	Y	Y	Y	N	N	N
	-	In plenum communications raceways	Y	Y	N	N	N	N	N	N	N
	-	In plenum cable routing assemblies	Y	Y	N	N	N	N	N	N	N
	-	In riser communications raceways	Y	Y	N	N	N	N	N	N	N
	-	In riser cable routing assemblies	Y	Y	N	N	N	N	N	N	N
	-	In one- and two-family dwellings	Y	Y	Y	Y	Y	Y	N	N	Y
Within buildings in other than air-handling spaces and risers	General	Y	Y	Y	Y	Y	Y	N	N	N	N
	In one- and two-family dwellings	Y	Y	Y	Y	Y	Y	Y	N	Y	N
	In multifamily dwellings	Y	Y	Y	Y	Y	Y	Y	N	N	N
	-	In nonconcealed spaces	Y	Y	Y	Y	Y	Y	Y	N	N
	-	Supported by cable trays	Y	Y	Y	Y	Y	N	N	N	N
	-	Under carpet, modular flooring, and planks	N	N	N	N	N	N	Y	N	N
	-	In distributing frames and cross-connect arrays	Y	Y	N	Y	N	N	N	N	N

Applications		Wire and Cable Type										
		Plenum	Riser	BMR	General-Purpose	BM	Limited-Use	Under-carpet	BMU, BLU	Hybrid Power and Communications Cables	Communications Wires	
	-	In rigid metal conduit (RMC) and intermediate metal conduit (IMC)	Y	Y	Y	Y	Y	Y	Y	Y	Y	Y
	-	In any raceway recognized in Chapter 3	Y	Y	Y	Y	Y	Y	N	N	N	Y
	-	In plenum communications raceways	Y	Y	N	Y	N	N	N	N	N	Y
	-	In plenum cable routing assemblies	Y	Y	N	Y	N	N	N	N	N	Y
	-	In riser communications raceways	Y	Y	N	Y	N	N	N	N	N	Y
	-	In riser cable routing assemblies	Y	Y	N	Y	N	N	N	N	N	Y
	-	In general-purpose communications raceways	Y	Y	N	Y	N	N	N	N	N	Y
	-	In general-purpose cable routing assemblies	Y	Y	N	Y	N	N	N	N	N	Y

Note: An “N” in the table indicates that the cable type shall not be installed in the application. A “Y” indicates that the cable type shall be permitted to be installed in the application subject to the limitations described in 722.131. The Riser column includes all riser cables except BMR, and the General-Purpose column includes all general-purpose cables except BM.

Informational Note No. 1: Table 722.110 covers the applications of listed communications wires, cables, and raceways in buildings.

Informational Note No. 2: See 722.131(B) for restrictions to the installation of communications cables in fabricated ducts.

Additional Proposed Changes

File Name	Description	Approved
Limited_Energy_Roster-2026_2nd_Draft.pdf	Limited-Energy Task Group Roster-2nd Draft	

Statement of Problem and Substantiation for Public Comment

This Public Comment is submitted on behalf of the Limited-Energy Task Group (see attached roster) to correct the reference in the section 722.130 to correctly refer to the appropriate part of new Article 723 created by a companion Public Comment from this Task Group.
See Companion PC-1312

Related Public Comments for This Document

Related Comment	Relationship
Public Comment No. 1312-NFPA 70-2024 [New Section after 722.182]	PC to create new Article 723 for Raceways, Cable Routing Assemblies and Cable Trays for Limited-Energy Installations.

Related Item

• FCR-238

Submitter Information Verification

Submitter Full Name: Kyle Krueger
Organization: NECA
Affiliation: NECA
Street Address:
City:
State:
Zip:

Submittal Date: Wed Aug 21 15:16:09 EDT 2024
Committee: NEC-P03

Limited Energy Task Group [2nd Draft]					
No.	First Name	Last Name	Class.	Organization	Other Committees
1	Kyle	Krueger	[I/M]	NECA	NEC-Correlating Comittee CMP 3 NFPA 72-Correlating Committee
2	Ernie	Gallo	[U/T]	NEBScore	
3	Derrick	Atkins	[L]	Minneapolis Electrical JA	NEC-Correlating Committee CMP 5
4	Anthony	Tassone	[R/T]	UL Solutions	CMP 3 CMP 16
5	Chad	Jones	[M]	Cisco	CMP 3
6	Sam	Rokowski	[I/M]	Maddox Inc.	CMP 3
7	George	Bish	[M]	Amazon/Ring Protect Inc	CMP 16
8	Trevor	Bowmer	[U]	Telecom Consulting	NEC Correlating Committee CMP 16
9	Ronald	Tellas	[M]	CCCA	CMP 3 CMP 16
10	Tim	Mikloiche	[E]	IAEI	CMP 3
11	Ryan	Jackosn	[M]	Steel Tube Industry	CMP 3
12	Diana	Lettkeman	[M]	Dish	CMP 16
13	John	Kacperski	[L]	IBEW	CMP 16

Public Comment No. 1368-NFPA 70-2024 [Section No. 722.130]

722.130 Application of Cables Used for Communications Circuits, Communications Wires, Cables, and Raceways and Listed Cable Routing Assemblies.

Permitted and nonpermitted applications of listed communications wires and cables, coaxial cables, network-powered broadband communications system cables shall be in accordance with Table 722.130.

The permitted applications shall be subject to the installation requirements of 722.110.

Table 722.130 Applications of Listed Communications Wires, Cables, Listed CATV-Type Coaxial Cables, and Listed Network-Powered Broadband Communications Cables in Buildings

Applications		Wire and Cable Type									
		Plenum	Riser	BMR	General-Purpose	BM	Limited-Use	Under-carpet	BMU, BLU	Hybrid Power and Communications Cables	Communications Wires
In ducts specifically fabricated for environmental air as described in 720.22(B)	In fabricated ducts	Y	N	N	N	N	N	N	N	N	N
	In metal raceway that complies with 720.22(B)	Y	Y	Y	Y	Y	Y	N	N	N	Y
In other spaces used for environmental air (plenums) as described in 720.22(C)	In other spaces used for environmental air	Y	N	N	N	N	N	N	N	N	N
	In metal raceway that complies with 720.22(C)	Y	Y	Y	Y	Y	Y	N	N	N	Y
	-	In plenum communications raceways	Y	N	N	N	N	N	N	N	N	N
	-	In plenum cable routing assemblies	Y	N	N	N	N	N	N	N	N	N
	-	Supported by open metal cable trays	Y	N	N	N	N	N	N	N	N	N
	-	Supported by solid bottom metal cable trays with solid metal covers	Y	Y	Y	Y	Y	Y	N	N	N	N
In risers	In vertical runs	Y	Y	Y	N	N	N	N	N	N	N
	-	In metal raceways	Y	Y	Y	Y	Y	Y	N	N	N	N
	-	In fireproof shafts	Y	Y	Y	Y	Y	Y	N	N	N	N
	-	In plenum communications raceways	Y	Y	N	N	N	N	N	N	N	N
	-	In plenum cable routing assemblies	Y	Y	N	N	N	N	N	N	N	N
	-	In riser communications raceways	Y	Y	N	N	N	N	N	N	N	N
	-	In riser cable routing assemblies	Y	Y	N	N	N	N	N	N	N	N
	-	In one- and two-family dwellings	Y	Y	Y	Y	Y	Y	N	N	Y	N
Within buildings in other than air-handling spaces and risers	General	Y	Y	Y	Y	Y	Y	N	N	N	N
	In one- and two-family dwellings	Y	Y	Y	Y	Y	Y	Y	N	Y	N
	In multifamily dwellings	Y	Y	Y	Y	Y	Y	Y	N	N	N
	-	In nonconcealed spaces	Y	Y	Y	Y	Y	Y	Y	N	N	N
	-	Supported by cable trays	Y	Y	Y	Y	Y	N	N	N	N	N
	-	Under carpet, modular flooring, and planks	N	N	N	N	N	N	Y	N	N	N
	-	In distributing frames and cross-connect arrays	Y	Y	N	Y	N	N	N	N	N	Y

Applications		Wire and Cable Type										
		Plenum	Riser	BMR	General-Purpose	BM	Limited-Use	Under-carpet	BMU, BLU	Hybrid Power and Communications Cables	Communications Wires	
	-	In rigid metal conduit (RMC) and intermediate metal conduit (IMC)	Y	Y	Y	Y	Y	Y	Y	Y	Y	Y
	-	In any raceway recognized in Chapter 3	Y	Y	Y	Y	Y	Y	N	N	N	Y
	-	In plenum communications raceways	Y	Y	N	Y	N	N	N	N	N	Y
	-	In plenum cable routing assemblies	Y	Y	N	Y	N	N	N	N	N	Y
	-	In riser communications raceways	Y	Y	N	Y	N	N	N	N	N	Y
	-	In riser cable routing assemblies	Y	Y	N	Y	N	N	N	N	N	Y
	-	In general-purpose communications raceways	Y	Y	N	Y	N	N	N	N	N	Y
	-	In general-purpose cable routing assemblies	Y	Y	N	Y	N	N	N	N	N	Y

Note: An “N” in the table indicates that the cable type shall not be installed in the application. A “Y” indicates that the cable type shall be permitted to be installed in the application subject to the limitations described in 722.131. The Riser column includes all riser cables except BMR, and the General-Purpose column includes all general-purpose cables except BM.

Informational Note No. 1: Table ~~722~~ 723 .~~110 covers~~ 20 covers the applications of listed communications wires, cables, and raceways in buildings.

Informational Note No. 2: See 722.131(B) for restrictions to the installation of communications cables in fabricated ducts.

Additional Proposed Changes

File Name	Description	Approved
Limited_Energy_Roster-2026_2nd_Draft.pdf	Limited-Energy Task Group Roster-2nd Draft	

Statement of Problem and Substantiation for Public Comment

This Public Comment is submitted on behalf of the Limited-Energy Task Group (see attached roster) to correct the reference in the informational note 1 to section 722.130 to correctly refer to the appropriate section of new Article 723 (723.20) created by a companion Public Comment from this Task Group.
See Companion PC-1312

Related Public Comments for This Document

Related Comment	Relationship
Public Comment No. 1312-NFPA 70-2024 [New Section after 722.182]	PC to create new Article 723 for Raceways, Cable Routing Assemblies and Cable Trays for Limited-Enery Installations

Related Item

- FCR-238

Submitter Information Verification

Submitter Full Name: Kyle Krueger
Organization: NECA
Affiliation: NECA
Street Address:
City:
State:
Zip:

Submittal Date: Wed Aug 21 15:24:09 EDT 2024
Committee: NEC-P03

Limited Energy Task Group [2nd Draft]					
No.	First Name	Last Name	Class.	Organization	Other Committees
1	Kyle	Krueger	[I/M]	NECA	NEC-Correlating Comittee CMP 3 NFPA 72-Correlating Committee
2	Ernie	Gallo	[U/T]	NEBScore	
3	Derrick	Atkins	[L]	Minneapolis Electrical JA	NEC-Correlating Committee CMP 5
4	Anthony	Tassone	[R/T]	UL Solutions	CMP 3 CMP 16
5	Chad	Jones	[M]	Cisco	CMP 3
6	Sam	Rokowski	[I/M]	Maddox Inc.	CMP 3
7	George	Bish	[M]	Amazon/Ring Protect Inc	CMP 16
8	Trevor	Bowmer	[U]	Telecom Consulting	NEC Correlating Committee CMP 16
9	Ronald	Tellas	[M]	CCCA	CMP 3 CMP 16
10	Tim	Mikloiche	[E]	IAEI	CMP 3
11	Ryan	Jackosn	[M]	Steel Tube Industry	CMP 3
12	Diana	Lettkeman	[M]	Dish	CMP 16
13	John	Kacperski	[L]	IBEW	CMP 16

Public Comment No. 1441-NFPA 70-2024 [Section No. 722.130]

722.130 Application of Cables Used for Communications Circuits, Communications Wires, Cables, and Raceways and Listed Cable Routing Assemblies.

Permitted and nonpermitted applications of listed communications wires and cables, coaxial cables, network-powered broadband communications system cables shall be in accordance with Table 722.130.

The permitted applications shall be subject to the installation requirements of 722.110.

Table 722.130 Applications of Listed Communications Wires, Cables, Listed CATV-Type Coaxial Cables, and Listed Network-Powered Broadband Communications Cables in Buildings

Applications		Wire and Cable Type									
		Plenum	Riser	BMR	General-Purpose	BM	Limited-Use	Under-carpet	BMU, BLU	Hybrid Power and Communications Cables	Communications Wires
In ducts specifically fabricated for environmental air as described in 720.22(B)	In fabricated ducts	Y	N	N	N	N	N	N	N	N	N
	In metal raceway that complies with 720.22(B)	Y	Y	Y	Y	Y	Y	N	N	N	Y
In other spaces used for environmental air (plenums) as described in 720.22(C)	In other spaces used for environmental air	Y	N	N	N	N	N	N	N	N	N
	In metal raceway that complies with 720.22(C)	Y	Y	Y	Y	Y	Y	N	N	N	Y
	-	In plenum communications raceways	Y	N	N	N	N	N	N	N	N	N
	-	In plenum cable routing assemblies	Y	N	N	N	N	N	N	N	N	N
	-	Supported by open metal cable trays	Y	N	N	N	N	N	N	N	N	N
	-	Supported by solid bottom metal cable trays with solid metal covers	Y	Y	Y	Y	Y	Y	N	N	N	N
In risers	In vertical runs	Y	Y	Y	N	N	N	N	N	N	N
	-	In metal raceways	Y	Y	Y	Y	Y	Y	N	N	N	N
	-	In fireproof shafts	Y	Y	Y	Y	Y	Y	N	N	N	N
	-	In plenum communications raceways	Y	Y	N	N	N	N	N	N	N	N
	-	In plenum cable routing assemblies	Y	Y	N	N	N	N	N	N	N	N
	-	In riser communications raceways	Y	Y	N	N	N	N	N	N	N	N
	-	In riser cable routing assemblies	Y	Y	N	N	N	N	N	N	N	N
	-	In one- and two-family dwellings	Y	Y	Y	Y	Y	Y	N	N	Y	N
Within buildings in other than air-handling spaces and risers	General	Y	Y	Y	Y	Y	Y	N	N	N	N
	In one- and two-family dwellings	Y	Y	Y	Y	Y	Y	Y	N	Y	N
	In multifamily dwellings	Y	Y	Y	Y	Y	Y	Y	N	N	N
	-	In nonconcealed spaces	Y	Y	Y	Y	Y	Y	Y	N	N	N
	-	Supported by cable trays	Y	Y	Y	Y	Y	N	N	N	N	N
	-	Under carpet, modular flooring, and planks	N	N	N	N	N	N	Y	N	N	N
	-	In distributing frames and cross-connect arrays	Y	Y	N	Y	N	N	N	N	N	Y

Applications		Wire and Cable Type										
		Plenum	Riser	BMR	General-Purpose	BM	Limited-Use	Under-carpet	BMU, BLU	Hybrid Power and Communications Cables	Communications Wires	
	-	In rigid metal conduit (RMC) and intermediate metal conduit (IMC)	Y	Y	Y	Y	Y	Y	Y	Y	Y	Y
	-	In any raceway recognized in Chapter 3	Y	Y	Y	Y	Y	Y	N	N	N	Y
	-	In plenum communications raceways	Y	Y	N	Y	N	N	N	N	N	Y
	-	In plenum cable routing assemblies	Y	Y	N	Y	N	N	N	N	N	Y
	-	In riser communications raceways	Y	Y	N	Y	N	N	N	N	N	Y
	-	In riser cable routing assemblies	Y	Y	N	Y	N	N	N	N	N	Y
	-	In general-purpose communications raceways	Y	Y	N	Y	N	N	N	N	N	Y
	-	In general-purpose cable routing assemblies	Y	Y	N	Y	N	N	N	N	N	Y

Note: An “N” in the table indicates that the cable type shall not be installed in the application. A “Y” indicates that the cable type shall be permitted to be installed in the application subject to the limitations described in 722.131. The Riser column includes all riser cables except BMR, and the General-Purpose column includes all general-purpose cables except BM.

Informational Note No. 1: Table 722.110 covers the applications of listed communications wires, cables, and raceways in buildings.

Informational Note No. 2: See 722.131(B) for restrictions to the installation of communications cables in fabricated ducts.

Informational Note No. 3: See UL 444, *Standard for Safety for Communications Cables*, for the compressive loading testing used to determine the suitability of cable for under-carpet use.

Additional Proposed Changes

File Name	Description	Approved
Limited_Energy_Roster-2026_2nd_Draft.pdf	Limited-Energy Task Group Roster-2nd Draft	

Statement of Problem and Substantiation for Public Comment

This public comment is submitted on behalf of the Limited-Energy Task Group (see attached roster) to relocate the Informational Note in section 722.100(A)(10) to new location after section/table 722.130 as Informational Note No. 3.

Related Public Comments for This Document

Related Comment	Relationship
Public Comment No. 1440-NFPA 70-2024 [Section No. 722.100(A)(10)]	PC to delete info note from 722.100(A)(10) to relocate to 722.130.
Public Comment No. 1440-NFPA 70-2024 [Section No. 722.100(A)(10)]	

Related Item

- FCR-238

Submitter Information Verification

Submitter Full Name: Kyle Krueger
Organization: NECA
Affiliation: NECA
Street Address:
City:
State:
Zip:

Submittal Date: Thu Aug 22 17:05:11 EDT 2024
Committee: NEC-P03

Limited Energy Task Group [2nd Draft]					
No.	First Name	Last Name	Class.	Organization	Other Committees
1	Kyle	Krueger	[I/M]	NECA	NEC-Correlating Comittee CMP 3 NFPA 72-Correlating Committee
2	Ernie	Gallo	[U/T]	NEBScore	
3	Derrick	Atkins	[L]	Minneapolis Electrical JA	NEC-Correlating Committee CMP 5
4	Anthony	Tassone	[R/T]	UL Solutions	CMP 3 CMP 16
5	Chad	Jones	[M]	Cisco	CMP 3
6	Sam	Rokowski	[I/M]	Maddox Inc.	CMP 3
7	George	Bish	[M]	Amazon/Ring Protect Inc	CMP 16
8	Trevor	Bowmer	[U]	Telecom Consulting	NEC Correlating Committee CMP 16
9	Ronald	Tellas	[M]	CCCA	CMP 3 CMP 16
10	Tim	Mikloiche	[E]	IAEI	CMP 3
11	Ryan	Jackosn	[M]	Steel Tube Industry	CMP 3
12	Diana	Lettkeman	[M]	Dish	CMP 16
13	John	Kacperski	[L]	IBEW	CMP 16

Public Comment No. 246-NFPA 70-2024 [Section No. 722.130]

~~**722.130** Application of Cables Used for Communications Circuits, Communications Wires, Cables, and Raceways and Listed Cable Routing Assemblies.~~

~~Permitted and nonpermitted applications of listed communications wires and cables, coaxial cables, network-powered broadband communications system cables shall be in accordance with Table 722.130 .~~

~~The permitted applications shall be subject to the installation requirements of 722.110 .~~

~~Table 722.130 Applications of Listed Communications Wires, Cables, Listed CATV-Type Coaxial Cables, and Listed Network-Powered Broadband Communications Cables in Buildings~~

~~Applications Wire and Cable Type Plenum Riser BMR General-Purpose BM Limited-Use Under-carpet BMU, BLU Hybrid Power and Communications Cables Communications Wires In ducts specifically fabricated for environmental air as described in 720.22(B) In fabricated ducts Y N N N N N N N N N In metal raceway that complies with 720.22(B) Y Y Y Y Y Y N N N Y In other spaces used for environmental air (plenums) as described in 720.22(C) In other spaces used for environmental air Y N N N N N N N N N In metal raceway that complies with 720.22(C) Y Y Y Y Y Y N N N Y - In plenum communications raceways Y N N N N N N N N N - In plenum cable routing assemblies Y N N N N N N N N N - Supported by open metal cable trays Y N N N N N N N N N - Supported by solid bottom metal cable trays with solid metal covers Y Y Y Y Y Y N N N N In risers In vertical runs Y Y Y N N N N N N N - In metal raceways Y Y Y Y Y Y N N N N - In fireproof shafts Y Y Y Y Y Y N N N N - In plenum communications raceways Y Y N N N N N N N N - In plenum cable routing assemblies Y Y N N N N N N N N - In riser communications raceways Y Y N N N N N N N N - In riser cable routing assemblies Y Y N N N N N N N N - In one- and two-family dwellings Y Y Y Y Y Y N N Y N Within buildings in other than air-handling spaces and risers General Y Y Y Y Y Y N N N N In one- and two-family dwellings Y Y Y Y Y Y Y N Y N In multifamily dwellings Y Y Y Y Y Y Y N N N - In nonconcealed spaces Y Y Y Y Y Y N N N - Supported by cable trays Y Y Y Y Y N N N N N - Under carpet, modular flooring, and planks N N N N N N Y N N N - In distributing frames and cross-connect arrays Y Y N Y N N N N N Y - In rigid metal conduit (RMC) and intermediate metal conduit (IMC) Y Y Y Y Y Y Y Y Y Y - In any raceway recognized in Chapter 3 Y Y Y Y Y Y N N N Y - In plenum communications raceways Y Y N Y N N N N N Y - In plenum cable routing assemblies Y Y N Y N N N N N Y - In riser communications raceways Y Y N Y N N N N N Y - In riser cable routing assemblies Y Y N Y N N N N N Y - In general-purpose communications raceways Y Y N Y N N N N N Y - In general-purpose cable routing assemblies Y Y N Y N N N N N Y~~

~~Note: An "N" in the table indicates that the cable type shall not be installed in the application. A "Y" indicates that the cable type shall be permitted to be installed in the application subject to the limitations described in 722.131. The Riser column includes all riser cables except BMR, and the General-Purpose column includes all general-purpose cables except BM.~~

~~Informational Note No. 1: Table 722.110 covers the applications of listed communications wires, cables, and raceways in buildings.~~

~~Informational Note No. 2: See 722.131(B) for restrictions to the installation of communications cables in fabricated ducts.~~

Additional Proposed Changes

File Name	Description	Approved
new_Table_722.130_08032024.docx	new Table 722.130	

Statement of Problem and Substantiation for Public Comment

PC 245 revises Table 722.130 to include the information in Tables 722.130, 722.160 and 722.170 enabling the deletion of redundant tables 722.160 and 722.170.

Related Public Comments for This Document

Related Comment	Relationship
Public Comment No. 1567-NFPA 70-2024 [Article 722]	

Related Item

- Global FCR-238

Submitter Information Verification

Submitter Full Name: David Kiddoo
Organization: CCCA
Affiliation: Communications Cable & Connectivity Association
Street Address:
City:
State:
Zip:

Submittal Date: Thu Jul 25 12:58:01 EDT 2024
Committee: NEC-P03

Table 722.130 Applications of Limited-Energy Cables in Buildings

Applications		Listed Limited-Energy Cable Type						
		Plenum Cables	Riser Cables	General Purpose Cables	Limited-Use Cables	Outdoor Cables		Undercarpet Cable
						PLTC	CL4Z & BLU	
In ducts specifically fabricated for environmental air as described in 720.22(B)	In fabricated ducts	Y	N	N	N	Y	N	N
	In metal raceway that complies with 300.25(B)	Y	Y	Y	Y	N	N	N
In other spaces used for environmental air (plenums) as described in 720.22(C)	In other spaces used for environmental air	Y	N	N	N	Y	N	N
	In metal raceway that complies with 300.25(C)	Y	Y	Y	Y	Y	N	N
	In plenum communications raceways	Y	N	N	N	N	N	N
	In plenum cable routing assemblies	Y	N	N	N	N	N	N
	Supported by open metal cable trays	Y	N	N	N	N	N	N
	Supported by solid bottom metal cable trays with solid metal covers	Y	Y	Y	Y	Y	N	N
In risers	In vertical runs	Y	Y	N	N	N	N	N
	In metal raceways	Y	Y	Y	Y	Y	N	N
	In fireproof shafts	Y	Y	Y	Y	Y	N	N
	In plenum communications raceways	Y	Y	N	N	N	N	N
	In plenum cable routing assemblies	Y	Y	N	N	N	N	N
	In riser communications raceways	Y	Y	N	N	N	N	N

	In riser cable routing assemblies	Y	Y	N	N	N	N	N
	In one- and two-family dwellings	Y	Y	Y	Y	Y	N	N
Within buildings in other than air-handling spaces and risers	General	Y	Y	Y	Y	Y	N	N
	In one- and two-family dwellings	Y	Y	Y	Y	Y	N	Y
	In multifamily dwellings	Y	Y	Y	Y	Y	N	Y
	In nonconcealed spaces	Y	Y	Y	Y	Y	N	Y
	Supported by cable trays	Y	Y	Y	N	Y	N	N
	Under carpet, modular flooring and planks	N	N	N	N	N	N	N
	In distributing frames and cross-connect arrays	Y	Y	Y	N	N	N	Y
	In any raceway recognized in Chapter 3	Y	Y	Y	Y	Y	N	N
	In plenum communications raceways	Y	Y	Y	N	Y	N	N
	In plenum cable routing assemblies	Y	Y	Y	N	Y	N	N
	In riser communications raceways	Y	Y	Y	N	Y	N	N
	In riser cable routing assemblies	Y	Y	Y	N	Y	N	N
	In general-purpose communications raceways	Y	Y	Y	N	Y	N	N
	In general-purpose cable routing assemblies	Y	Y	Y	N	Y	N	N

Note: An ‘N’ in the table indicates that the cable type shall not be permitted to be installed in the application. A ‘Y*’ indicates that the cable type is permitted to be installed in the application, subject to the limitations of the installation rules.

Informational Note: One example of the installation rules restricting the installation of cables, is the use of plenum cables in fabricated ducts. Table 722.120 has a “Y” for the installation of plenum cables in these ducts, but 720.22(B)(1) only permits cabling directly associated with the direct action upon or sensing of the contained air, while 720.22(B)(2) limits the length of the cable to 4 ft.

Public Comment No. 279-NFPA 70-2024 [Section No. 722.131]

~~**722.131** Installation of Cables Used for Communications Circuits, Communications Wires, Cable Routing Assemblies, and Communications Raceways.~~

~~**(A)** General.~~

~~Installation of cables used for communications circuits, communications wires, cable routing assemblies, and communications raceways shall comply with 722.131(A) through 722.131(L) . Installation of cable routing assemblies and communications raceways shall comply also with 722.110 . Types of cables used by this section shall be identified in Table 722.131(A) :~~

~~Table 722.131(A) Cables Used for Communications Circuits~~

~~- Listed Cable Types Plenum cables CMP, CATVP, BLP, OFNP, OFCP Riser cables CMR, CATVR, BMR, BLR, OFNR, OFCR General-purpose cables CMG, CM, CATV, BM, BL, OFNG, OFN, OFCG, OFC Limited-use cables CMX, CATVX, BLX Under-carpet CMUC Underground BMU, BLU~~

~~**(B)** Ducts Specifically Fabricated for Environmental Air.~~

~~Installations of cables used for communications circuits, communications wires, cable routing assemblies, and communications raceways in ducts specifically fabricated for environmental air shall be in accordance with 722.131(B)(1) and 722.131(B)(2) :~~

~~**(1)** Uses Permitted.~~

~~The following cables shall be permitted in ducts specifically fabricated for environmental air as described in 720.22(B) if they are directly associated with the air distribution system:~~

(1) ~~Plenum cables up to 1.22 m (4 ft) in length~~

(2) ~~Plenum, rise, general-purpose, and limited-use cables installed in raceways that are installed in compliance with 720.22(B)~~

~~**(2)** Uses Not Permitted.~~

~~The following cables, wires, cable routing assemblies, and communications raceways shall not be permitted in ducts specifically fabricated for environmental air as described in 720.22(B) :~~

(1) ~~Plenum, riser, and general-purpose communications raceways~~

(2) ~~Plenum, riser, and general-purpose cable routing assemblies~~

(3) ~~Riser, general-purpose, and limited-use cables~~

(4) ~~Type CMUC cables and wires~~

(5) ~~Types BMU and BLU cables~~

(6) ~~Communications wires~~

(7) ~~Hybrid power and communications cables~~

~~Informational Note: See NFPA 90A-2024, *Standard for the Installation of Air-Conditioning and Ventilating Systems* , for information on fire protection of wiring installed in fabricated ducts.~~

~~**(C)** Other Spaces Used for Environmental Air (Plenums).~~

~~Installations of cables used for communications circuits, communications wires, cable routing assemblies, and communications raceways in other spaces used for environmental air (plenums) shall be in accordance with 722.131(C)(1) and 722.131(C)(2) :~~

~~**(1)** Uses Permitted.~~

~~The following cables, wires, cable routing assemblies, and communications raceways shall be permitted in other spaces used for environmental air as described in 720.22(C) :~~

(1) ~~Plenum cables~~

(2) ~~Plenum communications raceways~~

(3) ~~Plenum cable routing assemblies~~

(4) ~~Plenum cables installed in plenum communications raceways~~

(5) ~~Plenum cables installed in plenum cable routing assemblies~~

(6) ~~Plenum cables and plenum communications raceways supported by open metal cable tray systems~~

(7) ~~Plenum, riser, general-purpose, and limited-use cables, and communications wires installed in raceways that are installed in compliance with 720.22(C)~~

(8) ~~Plenum, riser, general-purpose, limited-use cables and plenum, riser, and general-purpose communications raceways supported by solid bottom metal cable trays with solid metal covers in other spaces used for environmental air (plenums) as described in 720.22(C)~~

(9) ~~Plenum, riser, general-purpose, and limited-use cables installed in plenum, riser, and general-purpose communications raceways supported by solid bottom metal cable trays with solid metal covers in other spaces used for environmental air (plenums) as described in 720.22(C)~~

~~**(2)** Uses Not Permitted.~~

~~The following cables, wires, cable routing assemblies, and communications raceways shall not be permitted in other spaces used for environmental air as described in 720.22(C) :~~

(1) ~~Riser, general-purpose, and limited-use cables~~

(2) ~~Riser and general-purpose communications raceways~~

(3) ~~Riser and general-purpose cable routing assemblies~~

(4) ~~Type CMUC cables and wires~~

(5) ~~Types BMR, BM, BMU, and BLU cables~~

(6) ~~Communications wires~~

(7) ~~Hybrid power and communications cables~~

~~Informational Note: See NFPA 90A-2024, *Standard for the Installation of Air-Conditioning and Ventilating Systems* , for information on fire protection of wiring installed in other spaces used for environmental air.~~

~~**(D)** Risers — Cables, Cable Routing Assemblies, and Communications Raceways in Vertical Runs.~~

~~Installations of cables used for communications circuits, communications wires, cable routing assemblies, and communications raceways in risers shall be in accordance with 722.131(D)(1) and 722.131(D)(2) :~~

~~**(1)** Uses Permitted.~~

~~The following cables, cable routing assemblies, and communications raceways shall be permitted in vertical runs penetrating one or more floors and in vertical runs in a shaft:~~

(1) ~~Plenum and riser cables~~

(2) ~~Plenum and riser communications raceways~~

(3) ~~Plenum and riser cable routing assemblies~~

(4) ~~Plenum and riser cables installed in the following:~~

(5) ~~Plenum communications raceways~~

(6) ~~Riser communications raceways~~

(7) ~~Plenum cable routing assemblies~~

(8) ~~Riser cable routing assemblies~~

~~**(2)** Uses Not Permitted.~~

~~The following cables, wires, cable routing assemblies, and communications raceways shall not be permitted in risers:~~

(1) ~~General-purpose and limited-use cables~~

(2) ~~General-purpose communications raceways~~

(3) ~~General-purpose cable routing assemblies~~

(4) ~~Type CMUC cables and wires~~

(5) ~~Types BMR, BM, BMU, and BLU cables~~

(6) ~~Communications wires~~

(7) ~~Hybrid power and communications cables~~

~~Informational Note: See 720.21 for firestop requirements for floor penetrations.~~

~~**(E)** Risers — Cables and Innerducts in Metal Raceways.~~

~~Installations of cables used for communications circuits, communications wires, cable routing assemblies, and communications raceways in metal raceways in a riser having firestops at each floor shall be in accordance with 722.131(E)(1) and 722.131(E)(2) :~~

~~**(1)** Uses Permitted.~~

~~The following cables and innerducts shall be permitted in metal raceways in a riser having firestops at each floor:~~

(1) ~~Plenum, riser, general-purpose, and limited-use cables~~

(2) ~~Plenum, riser, and general-purpose communications raceways (innerduct)~~

(3) ~~Plenum, riser, general-purpose, and limited-use cables installed in the following:~~

(4) ~~Plenum communications raceways (innerduct)~~

(5) ~~Riser communications raceways (innerduct)~~

(6) ~~General-purpose communications raceways (innerduct)~~

~~**(2)** Uses Not Permitted.~~

~~The following cables, wires, cable routing assemblies, and communications raceways shall not be permitted in metal raceways in a riser having firestops at each floor:~~

(1) ~~Plenum, riser, and general-purpose cable routing assemblies~~

(2) ~~Type CMUC cables and wires~~

(3) ~~Types BMR, BM, BMU, and BLU cables~~

(4) ~~Communications wires~~

(5) ~~Hybrid power and communications cables~~

~~Informational Note: See 720.21 for firestop requirements for floor penetrations.~~

~~**(F)** Risers — Cables, Cable Routing Assemblies, and Communications Raceways in Fireproof Shafts.~~

~~Installations of cables used for communications circuits, communications wires, cable routing assemblies, and communications raceways in fireproof riser shafts having firestops at each floor shall be in accordance with 722.131(F)(1) and 722.131(F)(2):~~

~~**(1)** Uses Permitted.~~

~~The following cables, cable routing assemblies, and communications raceways shall be permitted to be installed in fireproof riser shafts having firestops at each floor:~~

(1) ~~Plenum, riser, general-purpose, and limited-use cables~~

(2) ~~Plenum, riser, and general-purpose communications raceways~~

(3) ~~Plenum, riser, and general-purpose cable routing assemblies~~

(4) ~~Plenum, riser, general-purpose, and limited-use cables installed in the following:~~

(5) ~~Plenum communications raceways~~

(6) ~~Riser communications raceways~~

(7) ~~General-purpose communications raceways~~

(8) ~~Plenum cable routing assemblies~~

(9) ~~Riser cable routing assemblies~~

(10) ~~General-purpose cable routing assemblies~~

~~**(2)** Uses Not Permitted.~~

~~The following cables, wires, cable routing assemblies, and communications raceways shall not be permitted in metal raceways in fireproof riser shafts having firestops at each floor:~~

(1) ~~Type CMUC cables and wires~~

(2) ~~Type BMU and BLU cables~~

(3) ~~Communications wires~~

(4) ~~Hybrid power and communications cables~~

~~Informational Note: See 720.21 for firestop requirements for floor penetrations.~~

~~**(G)** Risers — One- and Two-Family Dwellings.~~

~~Installations of cables used for communications circuits, communications wires, cable routing assemblies, and communications raceways in risers in one- and two-family dwellings shafts shall be in accordance with 722.131(G)(1) and 722.131(G)(2):~~

~~**(1)** Uses Permitted.~~

~~The following cables, cable routing assemblies, and communications raceways shall be permitted in one- and two-family dwellings:~~

(1) ~~Plenum, riser, and general-purpose cables~~

(2) ~~Limited-use cables less than 6 mm (0.25 in.) in diameter~~

(3) ~~Plenum, riser, and general-purpose communications raceways~~

(4) ~~Plenum, riser, and general-purpose cable routing assemblies~~

(5) ~~Plenum, riser, and general-purpose cables installed in the following:~~

(6) ~~Plenum communications raceways~~

(7) ~~Riser communications raceways~~

(8) ~~General-purpose communications raceways~~

(9) ~~Plenum cable routing assemblies~~

(10) ~~Riser cable routing assemblies~~

(11) ~~General-purpose cable routing assemblies~~

~~**(2)** Uses Not Permitted.~~

~~The following cables and wires shall not be permitted in risers in one- and two-family dwellings:~~

(1) ~~Type CMUC cables and wires~~

(2) ~~Type BMU and BLU cables~~

(3) ~~Communications wires~~

(4) ~~Hybrid power and communications cables~~

~~**(H)** Cable Trays.~~

~~Installations of cables used for communications circuits, communications wires, cable routing assemblies, and communications raceways supported by cable trays shall be in accordance with 722.131(H)(1) and 722.131(H)(2) :~~

~~**(1)** Uses Permitted.~~

~~The following wires, cables, and communications raceways shall be permitted to be supported by cable trays:~~

(1) ~~Plenum, riser, and general-purpose cables~~

(2) ~~Plenum, riser, and general-purpose communications raceways~~

(3) ~~Communications wires, plenum, riser, and general-purpose cables installed in the following:~~

(4) ~~Plenum communications raceways~~

(5) ~~Riser communications raceways~~

(6) ~~General-purpose communications raceways~~

~~**(2)** Uses Not Permitted.~~

~~The following cables and wires shall not be supported by cable trays:~~

(1) ~~Limited-use cables~~

(2) ~~Type CMUC cables and wires~~

(3) ~~Type BMU and BLU cables~~

(4) ~~Communications wires~~

(5) ~~Hybrid power and communications cables~~

~~**(I)** Distributing Frames and Cross-Connect Arrays.~~

~~Installations of cables used for communications circuits, communications wires, cable routing assemblies, and communications raceways in distributing frames and cross-connect arrays shall be in accordance with 722.131(I)(1) and 722.131(I)(2) :~~

~~**(1)** Uses Permitted.~~

~~The following wires, cables, cable routing assemblies, and communications raceways shall be permitted to be installed in distributing frames and cross-connect arrays:~~

(1) ~~Plenum, riser, general-purpose cables, and communications wires~~

(2) ~~Plenum, riser, and general-purpose communications raceways~~

(3) ~~Plenum, riser, and general-purpose cable routing assemblies~~

(4) ~~Communications wires, plenum, riser, and general-purpose cables installed in the following:~~

(5) ~~Plenum communications raceways~~

(6) ~~Riser communications raceways~~

(7) ~~General-purpose communications raceways~~

(8) ~~Plenum cable routing assemblies~~

(9) ~~Riser cable routing assemblies~~

(10) ~~General-purpose cable routing assemblies~~

~~**(2)** Uses Not Permitted.~~

~~The following cables and wires shall not be installed in distributing frames and cross-connect arrays:~~

(1) ~~Types BMR, BM, BMU, and BLU cables~~

(2) ~~Limited-use cables~~

(3) ~~Type CMUC cables and wires~~

(4) ~~Hybrid power and communications cables~~

~~**(J)** Other Building Locations.~~

~~Installations of cables used for communications circuits, cable communications wires, routing assemblies, and communications raceways in building locations other than those covered in 722.131(B) through 722.131(I) shall be in accordance with 722.131(J)(1) and 722.131(J)(2) :~~

~~**(1)** Uses Permitted.~~

~~The following wires, cables, cable routing assemblies, and communications raceways shall be permitted to be installed in building locations other than the locations covered in 722.131(B) through 722.131(I) :~~

(1) ~~Plenum, riser, and general-purpose cables~~

(2) ~~Limited-use cables with a maximum of 3 m (10 ft) of exposed length in nonconcealed spaces~~

(3) ~~Plenum, riser, and general-purpose communications raceways~~

(4) ~~Plenum, riser, and general-purpose cable routing assemblies~~

(5) ~~Communications wires, plenum, riser, and general-purpose cables installed in the following:~~

(6) ~~Plenum communications raceways~~

(7) ~~Riser communications raceways~~

(8) ~~General-purpose communications raceways~~

(9) ~~Plenum, riser, and general-purpose cables installed in the following:~~

(10) ~~Plenum cable routing assemblies~~

(11) ~~Riser cable routing assemblies~~

(12) ~~General-purpose cable routing assemblies~~

(13) ~~Communications wires and plenum, riser, general-purpose, and limited-use cables installed in raceways recognized in Chapter 3~~

(14) ~~Type CMUC under-carpet communications wires and cables installed under carpet, modular flooring, and planks.~~

~~**(2)** Uses Not Permitted.~~

~~The following cables, wires, cable routing assemblies, and communications raceways shall not be installed in building locations other than the locations covered in 722.131(B) through 722.131(I) :~~

(1) ~~Types BMU and BLU cables~~

(2) ~~Communications wires~~

(3) ~~Hybrid power and communications cables~~

~~**(K)** Multifamily Dwellings.~~

~~Installations of cables used for communications circuits, communications wires, cable routing assemblies, and communications raceways in multifamily dwellings shall be in accordance with 722.131(K)(1) and 722.131(K)(2) :~~

~~**(1)** Uses Permitted.~~

~~The following cables, cable routing assemblies, and communications raceways shall be permitted to be installed in multifamily dwellings in locations other than the locations covered in 722.131(B) through 722.131(G) :~~

(1) ~~Plenum, riser, and general-purpose cables~~

(2) ~~Limited-use cables less than 6 mm (0.25 in.) in diameter in nonconcealed spaces~~

(3) ~~Plenum, riser, and general-purpose communications raceways~~

(4) ~~Plenum, riser, and general-purpose cable routing assemblies~~

(5) ~~Communications wires and plenum, riser, and general-purpose cables installed in the following:~~

(6) ~~Plenum communications raceways~~

(7) ~~Riser communications raceways~~

(8) ~~General-purpose communications raceways~~

(9) ~~Plenum, riser, and general-purpose cables installed in the following:~~

(10) ~~Plenum cable routing assemblies~~

(11) ~~Riser cable routing assemblies~~

(12) ~~General-purpose cable routing assemblies~~

(13) ~~Communications wires and plenum, riser, general-purpose, and limited-use cables installed in raceways recognized in Chapter 3~~

(14) ~~Type CMUC under-carpet communications wires and cables installed under carpet, modular flooring, and planks~~

~~**(2)** Uses Not Permitted.~~

~~The following cables, cable routing assemblies, and communications raceways shall not be installed in multifamily dwellings in locations other than the locations covered in 722.131(B) through 722.131(G) :~~

(1) ~~Types BMU and BLU cables~~

(2) ~~Communications wires~~

(3) ~~Hybrid power and communications cable.~~

~~**(L)** One- and Two-Family Dwellings.~~

~~Installations of cables used for communications circuits, communications wires, cable routing assemblies, and communications raceways in one- and two-family dwellings in locations other than those covered in 722.131(B) through 722.131(F) shall be in accordance with 722.131(L)(1) and 722.131(L)(2) :~~

~~**(1)** Uses Permitted.~~

~~The following wires, cables, cable routing assemblies, and communications raceways shall be permitted to be installed in one- and two-family dwellings in locations other than the locations covered in 722.131(B) through 722.131(F) :~~

(1) ~~Plenum, riser, and general-purpose cables~~

(2) ~~Limited-use cables less than 6 mm (0.25 in.) in diameter~~

(3) ~~Plenum, riser, and general-purpose communications raceways~~

(4) ~~Plenum, riser, and general-purpose cable routing assemblies~~

(5) ~~Communications wires and plenum, riser, and general-purpose cables installed in the following:~~

(6) ~~Plenum communications raceways~~

(7) ~~Riser communications raceways~~

(8) ~~General-purpose communications raceways~~

(9) ~~Plenum, riser, and general-purpose cables installed in the following:~~

(10) ~~Plenum cable routing assemblies~~

(11) ~~Riser cable routing assemblies~~

(12) ~~General-purpose cable routing assemblies~~

(13) ~~Communications wires and plenum, riser, general-purpose, and limited-use cables installed in raceways recognized in Chapter 3~~

(14) ~~Type CMUC under-carpet communications wires and cables installed under carpet, modular flooring, and planks~~

(15) ~~Hybrid power and communications cable listed in accordance 722.100~~

~~**(2)** Uses Not Permitted.~~

~~The following cables, wires, cable routing assemblies, and communications raceways shall not be installed in one- and two-family dwellings in locations other than those covered in 722.131(B) through 722.131(F) :~~

(1) ~~Types BMU and BLU cables~~

(2) ~~Communications wires~~

REPLACE THE TEXT OF 722.131 WITH THE TEXT IN THE ATTACHED FILE

Additional Proposed Changes

File Name	Description	Approved
revised_722.131_08042024.docx	Revised 722.131	

Statement of Problem and Substantiation for Public Comment

Section 722.31 has been revised to delete any requirements that are outside the scope of the Article, including the installation of cables that are not limited-energy cables (for example medium-power network-powered broadband communications cables), and the installation of raceways and cable routing assemblies.

Related Public Comments for This Document

Related Comment	Relationship
Public Comment No. 1567-NFPA 70-2024 [Article 722]	

Related Item

• Global FCR-238

Submitter Information Verification

Submitter Full Name: David Kiddoo
Organization: CCCA
Affiliation: Communications Cable & Connectivity Association
Street Address:
City:
State:
Zip:

Submittal Date: Sat Jul 27 10:18:30 EDT 2024
Committee: NEC-P03

722.131 Installation of Limited-Energy Cables Used for Use in Communications Circuits

(A) General.

Installation of limited-energy cables used for communications circuits shall comply with 722.131(A) through 722.131(L). The types of limited-energy cables used for communications circuits are identified in Table 722.131(A).

Table 722.131(A) Limited-Energy Cables Used for Communications Circuits

-	**Listed Cable Types**
Plenum cables	CMP, CATVP, BLP, OFNP, OFCP
Riser cables	CMR, CATVR, BLR, OFNR, OFCR
General-purpose cables	CMG, CM, CATV, BL, OFNG, OFN, OFCG, OFC
Limited-use cables	CMX, CATVX, BLX
Under-carpet	CMUC
Underground	BLU

(B) Ducts Specifically Fabricated for Environmental Air.

Installations of limited-energy cables used for communications circuits in ducts specifically fabricated for environmental air shall be in accordance with 722.131(B)(1) and 722.131(B)(2).

(1) Uses Permitted.

The following limited-energy cables shall be permitted in ducts specifically fabricated for environmental air as described in 720.22(B) if they are directly associated with the air distribution system:

(1) Plenum cables up to 1.22 m (4 ft) in length

(2) Plenum, riser, general-purpose, and limited-use cables installed in raceways that are installed in compliance with 720.22(B)

(2) Uses Not Permitted.

The following limited-energy cables shall not be permitted in ducts specifically fabricated for environmental air as described in 720.22(B):

(1) Riser, general-purpose, and limited-use cables

(2) Type CMUC cables

(3) Type BLU cables

Informational Note: See NFPA 90A-2024, *Standard for the Installation of Air-Conditioning and Ventilating Systems*, for information on fire protection of wiring installed in fabricated ducts.

(C) Other Spaces Used for Environmental Air (Plenums).

Installations of limited-energy cables used for communications circuits in other spaces used for environmental air (plenums) shall be in accordance with 722.131(C)(1) and 722.131(C)(2).

(1) Uses Permitted.

The following limited-energy cables shall be permitted in other spaces used for environmental air as described in 720.22(C):

(1) Plenum cables

(2) Plenum cables installed in plenum communications raceways

(3) Plenum cables installed in plenum cable routing assemblies

(4) Plenum cables supported by open metal cable tray systems

(5) Plenum, riser, general-purpose, and limited-use cables installed in raceways that are installed in compliance with 720.22(C)

(8) Plenum, riser, general-purpose cables supported by solid bottom metal cable trays with solid metal covers

(9) Plenum, riser, general-purpose, and limited-use cables installed in plenum, riser, and general-purpose communications raceways supported by solid bottom metal cable trays with solid metal covers

(2) Uses Not Permitted.

The following limited-energy cables shall not be permitted in other spaces used for environmental air as described in 720.22(C):

(1) Riser, general-purpose, and limited-use cables

(2) Type CMUC cables

(3) Type BLU cables

Informational Note: See NFPA 90A-2024, *Standard for the Installation of Air-Conditioning and Ventilating Systems*, for information on fire protection of wiring installed in other spaces used for environmental air.

(D) Risers — Cables in Vertical Runs.

Installations of limited-energy cables used for communications circuits in risers shall be in accordance with 722.131(D)(1) and 722.131(D)(2).

(1) Uses Permitted.

The following limited-energy cables shall be permitted in vertical runs penetrating one or more floors and in vertical runs in a shaft:

(1) Plenum and riser cables

(2) Plenum and riser cables installed in the following:

a. Plenum communications raceways

b. Riser communications raceways

c. Plenum cable routing assemblies

d. Riser cable routing assemblies

(2) Uses Not Permitted.

The following limited-energy cables shall not be permitted in risers:

(1) General-purpose and limited-use cables

(2) Type CMUC cables

(3) Type BLU cables

Informational Note: See 720.21 for firestop requirements for floor penetrations.

(E) Risers — Cables in Metal Raceways.

Installations of limited-energy cables used for communications circuits in metal raceways in a riser having firestops at each floor shall be in accordance with 722.131(E)(1) and 722.131(E)(2).

(1) Uses Permitted.

The following limited-energy cables shall be permitted in metal raceways in a riser having firestops at each floor:

(1) Plenum, riser, general-purpose, and limited-use cables

(2) Plenum, riser, general-purpose, and limited-use cables installed in the following:

a. Plenum communications raceways (innerduct)

b. Riser communications raceways (innerduct)

c. General-purpose communications raceways (innerduct)

(2) Uses Not Permitted.

The following limited-energy cables shall not be permitted in metal raceways in a riser having firestops at each floor:

(1) Type CMUC cables

(2) Type BLU cables

Informational Note: See 720.21 for firestop requirements for floor penetrations.

(F) Risers — Cables in Fireproof Shafts.

Installations of limited-energy cables used for communications circuits in fireproof riser shafts having firestops at each floor shall be in accordance with 722.131(F)(1) and 722.131(F)(2).

(1) Uses Permitted.

The following limited-energy cables shall be permitted to be installed in fireproof riser shafts having firestops at each floor:

(1) Plenum, riser, general-purpose, and limited-use cables

(2) Plenum, riser, general-purpose, and limited-use cables installed in the following:

a. Plenum communications raceways

b. Riser communications raceways

c. General-purpose communications raceways

d. Plenum cable routing assemblies

e. Riser cable routing assemblies

f. General-purpose cable routing assemblies

(2) Uses Not Permitted.

The following limited-energy cables shall not be permitted in metal raceways in fireproof riser shafts having firestops at each floor:

(1) Type CMUC cables

(2) Type BLU cables

Informational Note: See 720.21 for firestop requirements for floor penetrations.

(G) Risers — One- and Two-Family Dwellings.

Installations of limited-energy cables used for communications circuits in risers in one- and two-family dwellings shafts shall be in accordance with 722.131(G)(1) and 722.131(G)(2).

(1) Uses Permitted.

The following limited-energy cables shall be permitted in one- and two-family dwellings:

(1) Plenum, riser, and general-purpose cables

(2) Limited-use cables less than 6 mm (0.25 in.) in diameter

(3) Plenum, riser, and general-purpose cables installed in the following:

a. Plenum communications raceways

b. Riser communications raceways

c. General-purpose communications raceways

d. Plenum cable routing assemblies

e. Riser cable routing assemblies

f. General-purpose cable routing assemblies

(2) Uses Not Permitted.

The following limited-energy cables shall not be permitted in risers in one- and two-family dwellings:

(1) Type CMUC cables

(2) Type BLU cables

(H) Cable Trays.

Installations of limited-energy cables used for communications circuits supported by cable trays shall be in accordance with 722.131(H)(1) and 722.131(H)(2).

(1) Uses Permitted.

The following limited-energy cables shall be permitted to be supported by cable trays:

(1) Plenum, riser, and general-purpose cables

(2) Plenum, riser, and general-purpose cables installed in the following:

a. Plenum communications raceways

b. Riser communications raceways

c. General-purpose communications raceways

(2) Uses Not Permitted.

The following limited-energy cables shall not be supported by cable trays:

(1) Limited-use cables

(2) Type CMUC cables

(3) Type BLU cables

(I) Distributing Frames and Cross-Connect Arrays.

Installations of limited-energy cables used for communications circuits in distributing frames and cross-connect arrays shall be in accordance with 722.131(I)(1) and 722.131(I)(2).

(1) Uses Permitted.

The following limited-energy cables shall be permitted to be installed in distributing frames and cross-connect arrays:

(1) Plenum, riser and general-purpose cables

(2) Plenum, riser, and general-purpose cables installed in the following:

a. Plenum communications raceways

b. Riser communications raceways

c. General-purpose communications raceways

d. Plenum cable routing assemblies

e. Riser cable routing assemblies

f. General-purpose cable routing assemblies

(2) Uses Not Permitted.

The following limited-energy cables shall not be installed in distributing frames and cross-connect arrays:

(1) Type BLU cables

(2) Limited-use cables

(3) Type CMUC cables

(J) Other Building Locations.

Installations of limited-energy cables used for communications circuits in building locations other than those covered in 722.131(B) through 722.131(I) shall be in accordance with 722.131(J)(1) and 722.131(J)(2).

(1) Uses Permitted.

The following limited-energy cables shall be permitted to be installed in building locations other than the locations covered in 722.131(B) through 722.131(I):

(1) Plenum, riser, and general-purpose cables

(2) Limited-use cables with a maximum of 3 m (10 ft) of exposed length in nonconcealed spaces

(3) Plenum, riser, and general-purpose cables installed in the following:

a. Plenum communications raceways

b. Riser communications raceways

c. General-purpose communications raceways

(6) Plenum, riser, and general-purpose cables installed in the following:

a. Plenum cable routing assemblies

b. Riser cable routing assemblies

c. General-purpose cable routing assemblies

(7) Plenum, riser, general-purpose, and limited-use cables installed in raceways recognized in Chapter 3

(8) Type CMUC cables installed under carpet, modular flooring, and planks.

(2) Uses Not Permitted.

The following limited-energy cables shall not be installed in building locations other than the locations covered in 722.131(B) through 722.131(I):

(1) Type BLU cables

(K) Multifamily Dwellings.

Installations of limited-energy cables used for communications circuits in multifamily dwellings shall be in accordance with 722.131(K)(1) and 722.131(K)(2).

(1) Uses Permitted.

The following limited-energy cables shall be permitted to be installed in multifamily dwellings in locations other than the locations covered in 722.131(B) through 722.131(G):

(1) Plenum, riser, and general-purpose cables

(2) Limited-use cables less than 6 mm (0.25 in.) in diameter in nonconcealed spaces

(3) Plenum, riser, and general-purpose cables installed in the following:

a. Plenum communications raceways

b. Riser communications raceways

c. General-purpose communications raceways

(6) Plenum, riser, and general-purpose cables installed in the following:

a. Plenum cable routing assemblies

b. Riser cable routing assemblies

c. General-purpose cable routing assemblies

(7) Plenum, riser, general-purpose, and limited-use cables installed in raceways recognized in Chapter 3

(8) Type CMUC cables installed under carpet, modular flooring, and planks

(2) Uses Not Permitted.

The following limited-energy cables shall not be installed in multifamily dwellings in locations other than the locations covered in 722.131(B) through 722.131(G):

(1) Type BLU cables

(L) One- and Two-Family Dwellings.

Installations of limited-energy cables used for communications circuits in one- and two-family dwellings in locations other than those covered in 722.131(B) through 722.131(F) shall be in accordance with 722.131(L)(1) and 722.131(L)(2).

(1) Uses Permitted.

The following limited-energy cable shall be permitted to be installed in one- and two-family dwellings in locations other than the locations covered in 722.131(B) through 722.131(F):

(1) Plenum, riser, and general-purpose cables

(2) Limited-use cables less than 6 mm (0.25 in.) in diameter

(3) Plenum, riser, and general-purpose cables installed in the following:

a. Plenum communications raceways

b. Riser communications raceways

c. General-purpose communications raceways

(6) Plenum, riser, and general-purpose cables installed in the following:

a. Plenum cable routing assemblies

b. Riser cable routing assemblies

c. General-purpose cable routing assemblies

(7) Plenum, riser, general-purpose, and limited-use cables installed in raceways recognized in Chapter 3

(8) Type CMUC cables installed under carpet, modular flooring, and planks

(2) Uses Not Permitted.

The following limited-energy cables shall not be installed in one- and two-family dwellings in locations other than those covered in 722.131(B) through 722.131(F):

(1) Type BLU cables

Public Comment No. 1369-NFPA 70-2024 [Section No. 722.131(A)]

(A) General.

(1) Installation of ~~cables used for communications circuits, communications wires,~~ limited-energy cables in cable routing assemblies, and communications raceways shall comply with 722.131(A) through 722.131(L).~~ Installation of cable routing assemblies and communications raceways shall comply also with 722.110~~ .

(2) In addition to those requirements in 722.131(A)(1), limited-energy cables shall also comply with the following:

(a) For the installation of cable routing assemblies Article 723, Part III.

(b) For the installation of communications raceways Article 723, Part IV.

(3) Types of cables used by this section shall be ~~identified in~~ those indicated in Table 722.131(A).

Table 722.131(A) Cables Used for Communications Circuits

	-	Listed Cable Types
Plenum cables	CMP, CATVP, BLP, OFNP, OFCP	
Riser cables	CMR, CATVR, BMR, BLR, OFNR, OFCR	
General-purpose cables	CMG, CM, CATV, BM, BL, OFNG, OFN, OFCG, OFC	
Limited-use cables	CMX, CATVX, BLX	
Under-carpet	CMUC	
Underground	BMU, BLU	

Additional Proposed Changes

File Name	Description	Approved
Limited_Energy_Roster-2026_2nd_Draft.pdf	Limited-Energy Task Group Roster-2nd Draft	

Statement of Problem and Substantiation for Public Comment

This Public Comment is submitted on behalf of the Limited-Energy Task Group (see attached roster) to correct the reference in the section 722.131(A) to correctly refer to the appropriate parts of new Article 723 created by a companion Public Comment from this Task Group. Additionally, the terms referencing communications cables and wires is not needed as it is covered by the new definition of Limited-Energy Cable.
See Companion PC-1312 & 1371

Related Public Comments for This Document

Related Comment	Relationship
Public Comment No. 1312-NFPA 70-2024 [New Section after 722.182]	PC to create new Article 723 for Raceways, Cable Routing Assembies, and Cable Trays for Limited-Energy Installations.
Public Comment No. 1371-NFPA 70-2024 [New Definition after Definition: Cable Joint.]	PC to create definition of Limited-Energy Cable.

Related Item

- FCR-238

Submitter Information Verification

Submitter Full Name: Kyle Krueger
Organization: NECA
Affiliation: NECA
Street Address:
City:
State:
Zip:

Submittal Date: Wed Aug 21 15:26:21 EDT 2024
Committee: NEC-P03

Limited Energy Task Group [2nd Draft]					
No.	First Name	Last Name	Class.	Organization	Other Committees
1	Kyle	Krueger	[I/M]	NECA	NEC-Correlating Comittee CMP 3 NFPA 72-Correlating Committee
2	Ernie	Gallo	[U/T]	NEBScore	
3	Derrick	Atkins	[L]	Minneapolis Electrical JA	NEC-Correlating Committee CMP 5
4	Anthony	Tassone	[R/T]	UL Solutions	CMP 3 CMP 16
5	Chad	Jones	[M]	Cisco	CMP 3
6	Sam	Rokowski	[I/M]	Maddox Inc.	CMP 3
7	George	Bish	[M]	Amazon/Ring Protect Inc	CMP 16
8	Trevor	Bowmer	[U]	Telecom Consulting	NEC Correlating Committee CMP 16
9	Ronald	Tellas	[M]	CCCA	CMP 3 CMP 16
10	Tim	Mikloiche	[E]	IAEI	CMP 3
11	Ryan	Jackosn	[M]	Steel Tube Industry	CMP 3
12	Diana	Lettkeman	[M]	Dish	CMP 16
13	John	Kacperski	[L]	IBEW	CMP 16

Public Comment No. 1353-NFPA 70-2024 [Section No. 722.133(A)(1)]

(1) Other Circuits.

~~Communications~~ Listed communications cables and CATV-type coaxial cables shall be permitted in the same raceway, cable tray, box, enclosure, or cable routing assembly together and with ~~jacketed cables of any of the following:~~

(1) ~~Class 2 and Class 3 remote-control, signaling, and power-limited circuits in compliance with 645.6(E)(2) or Article 725, Parts I and II~~

(2) ~~Power-limited fire alarm systems in compliance with Article 760, Parts I and III~~

(3) ~~Nonconductive and conductive optical fiber cables in compliance with Article 722, Parts I and III~~

(4) ~~Communications circuits in compliance with Article 722, Parts I and III~~

(5) ~~Community antenna television and radio distribution systems in compliance with Article 722, Parts I and III~~

(6) ~~Low-power network-powered broadband communications circuits in compliance with Article 722, Parts I and III~~

other listed limited-energy cables.

Statement of Problem and Substantiation for Public Comment

The recommended text greatly simplifies the code language and adds clarity by simply stating that limited-energy cables can be run together.

Related Public Comments for This Document

Related Comment	Relationship
Public Comment No. 1446-NFPA 70-2024 [Section No. 722.164(C)]	

Related Item

- Global FCR-238

Submitter Information Verification

Submitter Full Name: David Kiddoo
Organization: CCCA
Affiliation: Communications Cable & Connectivity Association
Street Address:
City:
State:
Zip:

Submittal Date: Wed Aug 21 10:08:05 EDT 2024
Committee: NEC-P03

Public Comment No. 281-NFPA 70-2024 [Section No. 722.133(D)]

(D) Permitted Substitutions of Listed Limited-Energy Coaxial Type CATV Cables.

The substitutions for limited-energy CATV-type coaxial cables in Table 722.133(D) and illustrated in Figure 722.133(D) shall be permitted.

Informational Note: The substitute cables in Table 722.133(D) and Figure 722.133(D) are only coaxial-type cables.

Table 722.133(D) Permitted Substitutions of Listed Coaxial Type CATV Cables

Cable Type	Permitted Substitutions
CATVP	CMP, BLP
CATVR	CATVP, CMP, CMR, BMR, BLP, BLR
CATV	CATVP, CMP, CATVR, CMR, CMG, CM, BMR, BM, BLP, BLR, BL
CATVX	CATVP, CMP, CATVR, CMR, CATV, CMG, CM, BMR, BM, BLP, BLR, BL, BLX

Figure 722.133(D) Listed Limited-Energy Coaxial Type CATV Cables Permitted Substitution Hierarchy.

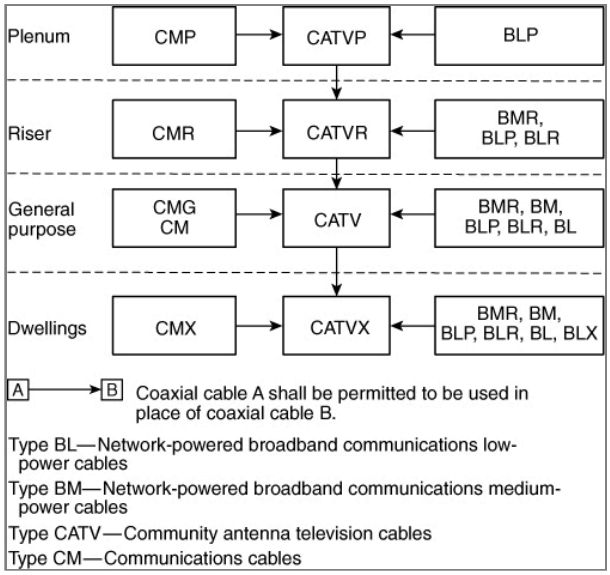

Statement of Problem and Substantiation for Public Comment

"Limited-energy" was added for clarity.

Related Public Comments for This Document

Related Comment	Relationship
Public Comment No. 1567-NFPA 70-2024 [Article 722]	

Related Item

- Global FCR-238

Submitter Information Verification

Submitter Full Name: David Kiddoo
Organization: CCCA
Affiliation: Communications Cable & Connectivity Association
Street Address:
City:
State:
Zip:

Submittal Date: Sat Jul 27 10:50:11 EDT 2024
Committee: NEC-P03

Public Comment No. 1468-NFPA 70-2024 [Section No. 722.133(E)]

(E) Dwelling Unit Communications Outlet.

For new construction, a minimum of one accessible communications outlet shall be installed ~~with~~ within the dwelling ~~in a readily accessible area and~~ . It shall be cabled to the service provider demarcation point.

Statement of Problem and Substantiation for Public Comment

There is no reason that a something that could be a coxial cable connector or a phone jack needs to be readily accessible. Putting a couch in front of it, or putting it beneath a desk could result an code violation that is not unsafe.

Related Item

- FCR 238

Submitter Information Verification

Submitter Full Name: Ryan Jackson
Organization: Self-employed
Street Address:
City:
State:
Zip:

Submittal Date: Fri Aug 23 10:31:54 EDT 2024
Committee: NEC-P03

Public Comment No. 1533-NFPA 70-2024 [Section No. 722.133(E)]

~~**(E)** Dwelling Unit Communications Outlet.~~

~~For new construction, a minimum of one communications outlet shall be installed with the dwelling in a readily accessible area and cabled to the service provider demarcation point.~~

Additional Proposed Changes

File Name	Description	Approved
Limited_Energy_Roster-2026_2nd_Draft.pdf	Limited-Energy Task Group Roster-2nd Draft	

Statement of Problem and Substantiation for Public Comment

This public comment is submitted on behalf of the Limited-Energy Task Group (see attached roster) to delete section 722.133(E) to as it has been relocated to Article 720, specifically section 720.9. This requirement is general in nature to communications installations, as such it is more appropriately located in new article 720 for general requirements for limited-energy system installations.

Related Public Comments for This Document

Related Comment	Relationship
Public Comment No. 1531-NFPA 70-2024 [New Section after 720.8(B)]	PC relocating 722.133(E) to new section 720.9
Public Comment No. 1541-NFPA 70-2024 [Article 805]	PC deleting 805.156
Public Comment No. 1531-NFPA 70-2024 [New Section after 720.8(B)]	
Public Comment No. 1541-NFPA 70-2024 [Article 805]	

Related Item

- FCR-238

Submitter Information Verification

Submitter Full Name: Kyle Krueger
Organization: NECA
Affiliation: NECA
Street Address:
City:
State:
Zip:

Submittal Date: Fri Aug 23 16:59:30 EDT 2024
Committee: NEC-P03

Limited Energy Task Group [2nd Draft]					
No.	First Name	Last Name	Class.	Organization	Other Committees
1	Kyle	Krueger	[I/M]	NECA	NEC-Correlating Comittee CMP 3 NFPA 72-Correlating Committee
2	Ernie	Gallo	[U/T]	NEBScore	
3	Derrick	Atkins	[L]	Minneapolis Electrical JA	NEC-Correlating Committee CMP 5
4	Anthony	Tassone	[R/T]	UL Solutions	CMP 3 CMP 16
5	Chad	Jones	[M]	Cisco	CMP 3
6	Sam	Rokowski	[I/M]	Maddox Inc.	CMP 3
7	George	Bish	[M]	Amazon/Ring Protect Inc	CMP 16
8	Trevor	Bowmer	[U]	Telecom Consulting	NEC Correlating Committee CMP 16
9	Ronald	Tellas	[M]	CCCA	CMP 3 CMP 16
10	Tim	Mikloiche	[E]	IAEI	CMP 3
11	Ryan	Jackosn	[M]	Steel Tube Industry	CMP 3
12	Diana	Lettkeman	[M]	Dish	CMP 16
13	John	Kacperski	[L]	IBEW	CMP 16

Public Comment No. 280-NFPA 70-2024 [Section No. 722.133(E)]

~~**(E)** Dwelling Unit Communications Outlet.~~

~~For new construction, a minimum of one communications outlet shall be installed with the dwelling in a readily accessible area and cabled to the service provider demarcation point.~~

Statement of Problem and Substantiation for Public Comment

Installation of outlets is outside the scope of Article 722.

Related Public Comments for This Document

Related Comment	Relationship
Public Comment No. 1567-NFPA 70-2024 [Article 722]	

Related Item

- Global FCR-238

Submitter Information Verification

Submitter Full Name: David Kiddoo
Organization: CCCA
Affiliation: Communications Cable & Connectivity Association
Street Address:
City:
State:
Zip:

Submittal Date: Sat Jul 27 10:44:30 EDT 2024
Committee: NEC-P03

Public Comment No. 282-NFPA 70-2024 [Section No. 722.134]

722.134 Installation of Network-Powered Broadband Communications Cables and Equipment.

Cable and equipment installations within buildings shall comply with 722.134(A) through 722.134(C), as applicable.

(A) Separation of Conductors.

(1) In Raceways, Cable Trays, Boxes, Enclosures, and Cable Routing Assemblies.

(a) *Low- and Medium-Power Network-Powered Broadband Communications Circuit Cables.* Low- and medium-power network-powered broadband communications cables shall be permitted in the same raceway, cable tray, box, enclosure, or cable routing assembly.

(b) *Low-Power Network-Powered Broadband Communications Circuit Cables with Other Circuits.* Low-power network-powered broadband communications cables shall be permitted in the same raceway, cable tray, box, enclosure, or cable routing assembly with ~~jacketed cables of any of the following circuits:~~

(3) ~~Class 2 and Class 3 remote-control, signaling, and power-limited circuits in compliance with Article 725, Parts I and II~~

(4) ~~Power-limited fire alarm systems in compliance with Article 760, Parts I and III~~

(5) ~~Communications circuits in compliance with Article 722, Parts I and III~~

(6) ~~Nonconductive and conductive optical fiber cables in compliance with Article 722, Parts I and III~~

(7) ~~Community antenna television and radio distribution systems in compliance with Article 722, Parts I and III~~

(h) ~~*Medium-Power Network-Powered Broadband Communications Circuit Cables with Optical Fiber Cables and Other Communications Cables.* Medium-power network-powered broadband communications cables shall not be permitted in the same raceway, cable tray, box, enclosure, or cable routing assembly with conductors of any of the following circuits:~~

(9) ~~Communications circuits in compliance with Article 722, Parts I and III~~

(10) ~~Conductive optical fiber cables in compliance with Article 722, Parts I and III~~

(11) ~~Community antenna television and radio distribution systems in compliance with Article 722, Parts I and III~~

(l) ~~*Medium-Power Network-Powered Broadband Communications Circuit Cables with Other Circuits.* Medium-power network-powered broadband communications cables shall not be permitted in the same raceway, cable tray, box, enclosure, or cable routing assembly with conductors of any of the following circuits:~~

(13) ~~Class 2 and Class 3 remote-control, signaling, and power-limited circuits in compliance with Article 725, Parts I and II~~

(14) ~~Power-limited fire alarm systems in compliance with Article 760, Parts I and III~~

~~Electric Light, Power, Class 1, Nonpowered Broadband Communications~~

(o) other listed limited-energy cables.

(p) *Electric Light, Power, Class 1, Non-power-limited fire alarm Circuit Cables.* Network-powered broadband communications ~~cable~~ cables shall not be placed in any raceway, cable tray, compartment, outlet box, junction box, or similar fittings with conductors of electric light, power, Class 1, or non-power-limited fire alarm circuit cables.

Exception No. 1: Network-powered broadband communications cable shall be permitted to be placed in a raceway, cable tray, compartment, outlet box, junction box, or similar fittings with conductors of electric light, power, Class 1, or non-power-limited fire alarm circuit cables where all of the conductors of electric light, power, Class 1, non-power-limited fire alarm circuits are separated from all of the network-powered broadband communications cables by a permanent barrier or listed divider.

Exception No. 2: Where power circuit conductors are installed in in outlet boxes, junction boxes, or similar fittings or compartments where such conductors are introduced solely for power supply to the network-powered broadband communications system distribution equipment, the power circuit conductors shall be routed within the enclosure to maintain a minimum 6 mm (¼ in.) separation from network-powered broadband communications cables.

(2) Other Applications.

Network-powered broadband communications cable shall be separated at least 50 mm (2 in.) from conductors of any electric light, power, Class 1, and non-power-limited fire alarm circuits.

Exception No. 1: Separation shall not be required where either of the following applies:

(1) All of the conductors of electric light, power, Class 1, and non-power-limited fire alarm circuits are in a raceway or in metal-sheathed, metal-clad, nonmetallic-sheathed, Type AC, or Type UF cables.

(2) All of the network-powered broadband communications cables are encased in a raceway.

Exception No. 2: Separation shall not be required where the network-powered broadband communications cables are permanently separated from the conductors of electric light, power, Class 1, and non-power-limited fire alarm circuits by a continuous and firmly fixed nonconductor, such as porcelain tubes or flexible tubing, in addition to the insulation on the wire.

(B) Support of Network-Powered Broadband Communications Cables.

Raceways shall be used for their intended purpose. Network-powered broadband communications cables shall not be strapped, taped, or attached by any means to the exterior of any conduit or raceway as a means of support.

(C)

~~Splicing of Medium-Powered Network-Powered Communications Cables.~~

~~Where a medium-powered network-powered broadband communications cable is spliced or extended, a listed junction box or listed patch panel shall be used.~~

~~**(D)** Bends.~~

~~Bends in network broadband cable shall be made so as not to damage the cable. The radius of the curve of the inner edge of any bend shall not be less than 10 times the diameter of the cable.~~

~~Informational Note: See ANSI/TIA-568.0-E, *Generic Telecommunications Cabling for Customer Premises* , for information on bend radii of network broadband cable during different types of installation conditions.~~

Statement of Problem and Substantiation for Public Comment

Article 722 covers only limited energy cables. Since medium-powered network-powered broadband cables are outside the scope of the Article, requirements for the installation of these cables should be deleted.

The recommended text greatly simplifies the code language and adds clarity by simply stating that limited-energy cables can be run together.

Because of the limitations of the TerraView program the changes are best view in the "Hide Markup" mode.

Related Public Comments for This Document

Related Comment	Relationship
Public Comment No. 1567-NFPA 70-2024 [Article 722]	

Related Item

- Global FCR-238

Submitter Information Verification

Submitter Full Name: David Kiddoo
Organization: CCCA
Affiliation: Communications Cable & Connectivity Association
Street Address:
City:
State:
Zip:

Submittal Date: Sat Jul 27 11:00:27 EDT 2024
Committee: NEC-P03

Public Comment No. 283-NFPA 70-2024 [Section No. 722.136]

722.136 Permitted Substitutions of Low-Power Network-Powered Broadband Communications System Cables.

The substitutions for low-power network-powered broadband system cables listed in Table 722.136 shall be permitted.

Table 722.136 Permitted Substitutions of Low-Power Network-Powered Broadband Communications System Cables.

Cable Type	Permitted Cable Substitutions
~~BM~~	~~BMR~~
BLP	CMP, CL3P
BLR	CMP, CL3P, CMR, CL3R, BLP, BMR
BL	CMP, CMR, CM, CMG, CL3P, CL3R, CL3, BMR, BM, BLP, BLR
BLX	CMP, CMR, CM, CMG, CMX, CL3P, CL3R, CL3, CL3X, BMR, BM, BLP, BRP, BL

Statement of Problem and Substantiation for Public Comment

Medium-power, network-powered broadband cables are outside the scope of Article 722, so the substitutions for Type BM are deleted.

Related Public Comments for This Document

Related Comment	Relationship
Public Comment No. 1567-NFPA 70-2024 [Article 722]	

Related Item

- Global FCR-238

Submitter Information Verification

Submitter Full Name: David Kiddoo
Organization: CCCA
Affiliation: Communications Cable & Connectivity Association
Street Address:
City:
State:
Zip:

Submittal Date: Sat Jul 27 11:15:27 EDT 2024
Committee: NEC-P03

Public Comment No. 1439-NFPA 70-2024 [Section No. 722.140(A)]

(A) General.

Class 2 and Class 3 circuits on the load side of the power source shall be permitted to be installed using wiring methods and materials in accordance with 722.140(A), 722.140(B), or a combination of both.

(1)~~–~~ Class 1 Wiring Methods and Materials.

Use of Class 1 wiring methods for Class 2 and Class 3 circuits shall be permitted. Separation from electric light, power, Class 1, non-power-limited fire alarm circuit conductors, and medium-power network-powered broadband communications cables shall comply with 725.136.

Exception: The ampacity adjustment factors given in 310.15(C)(1) shall not apply.

(2) Class 2 and Class 3 Wiring Methods and Materials.

Conductors on the load side of the power source shall be ~~insulated in accordance with~~ ~~722.100~~ ~~and~~ ~~722.102~~ ~~and be~~ installed in accordance with ~~722.110~~ ~~, 722.~~ *7* 22. 140(B), 723.20 , and 725.136.

Exception No. 1:

~~As~~

As provided for

~~in~~

in 620.21

~~for~~

for elevators and similar equipment.

Exception No. 2:

~~Other~~

Other wiring methods and materials installed in accordance with 725.3 shall be permitted to extend or replace the conductors and

~~cables described in~~

cables permitted by 722.

~~100(A) and permitted by 722.~~

140(A)(2) .

Exception No. 3:

~~Bare~~

Bare Class 2 conductors shall be permitted as part of a listed intrusion protection system where installed in accordance with the listing instructions for the system.

(3) Class 2 and Class 3 Cable Voltage and Temperature Ratings.

(*a) Class 2 Cables.* Class 2 cables shall have a voltage rating of not less than 150-volts.

(b) Class 3 Cables. Class 3 cables shall have a voltage rating of not less than 300-volts.

(c) Class 2 and Class 3 Cables. Class 2 and Class 3 cables shall have a temperature rating of not less tha. 60ºC (140ºF).

(4) Class 3 Single Conductors.

Class 3 single conductors installed as other wiring within buildings shall be listed Type CL3 and shall not be smaller than 18 AWG.

Informational Note: See ANSI/UL 1685 , Standard for Safety for Vertical-Tray Fire-Propagation and Smoke-Release Test for Electrical and Optical-Fiber Cables , for the UL flame exposure, vertical tray flame test that is used to determine resistance to the spread of fire when cables do not spread fire to the top of the tray. The smoke measurements in the test method are not applicable.

Additional Proposed Changes

File Name	Description	Approved
Limited_Energy_Roster-2026_2nd_Draft.pdf	Limited-Energy Task Group Roster-2nd Draft	

Statement of Problem and Substantiation for Public Comment

This public comment is submitted on behalf of the Limited-Energy Task Group (see attached roster) to accomplish the following actions:
(1) Delete references that are no longer valid as the listing requirements in Section 722.100 have been deleted as part of a companion PI submitted by this Task Group.
(2) Delete and replace the reference to section 722.110 to new location in new section 723.20.
(3) Relocate the requirement and Informational Note in section 722.100(A)(8) to new section 722.140(A)(4) with the other class 2 and 3 cabling requirements.
(4) Relocate the requirements for Class 2 and 3 temperature ratings from section 722.100(A)(14) to new section 722.140(A)(3) with the other Class 2 and 3 cabling requirements.

Related Public Comments for This Document

Related Comment	Relationship
Public Comment No. 1437-NFPA 70-2024 [Section No. 722.100(A)(8)]	PC to delete section 722.100(8) to relocate to 722.140
Public Comment No. 1438-NFPA 70-2024 [Section No. 722.100(A)(14)]	PC to delete section 722.100(A)(14) to relocate to 722.140.
Public Comment No. 1437-NFPA 70-2024 [Section No. 722.100(A)(8)]	
Public Comment No. 1438-NFPA 70-2024 [Section No. 722.100(A)(14)]	

Related Item

- FCR-238

Submitter Information Verification

Submitter Full Name: Kyle Krueger
Organization: NECA
Affiliation: NECA
Street Address:
City:
State:
Zip:
Submittal Date: Thu Aug 22 16:49:37 EDT 2024
Committee: NEC-P03

Limited Energy Task Group [2nd Draft]					
No.	First Name	Last Name	Class.	Organization	Other Committees
1	Kyle	Krueger	[I/M]	NECA	NEC-Correlating Comittee CMP 3 NFPA 72-Correlating Committee
2	Ernie	Gallo	[U/T]	NEBScore	
3	Derrick	Atkins	[L]	Minneapolis Electrical JA	NEC-Correlating Committee CMP 5
4	Anthony	Tassone	[R/T]	UL Solutions	CMP 3 CMP 16
5	Chad	Jones	[M]	Cisco	CMP 3
6	Sam	Rokowski	[I/M]	Maddox Inc.	CMP 3
7	George	Bish	[M]	Amazon/Ring Protect Inc	CMP 16
8	Trevor	Bowmer	[U]	Telecom Consulting	NEC Correlating Committee CMP 16
9	Ronald	Tellas	[M]	CCCA	CMP 3 CMP 16
10	Tim	Mikloiche	[E]	IAEI	CMP 3
11	Ryan	Jackosn	[M]	Steel Tube Industry	CMP 3
12	Diana	Lettkeman	[M]	Dish	CMP 16
13	John	Kacperski	[L]	IBEW	CMP 16

Public Comment No. 284-NFPA 70-2024 [Section No. 722.140(B)(1)]

(1) Classification of Circuits.

Circuits carrying data and power shall be classified as electrical power circuits in accordance with the type of electrical power carried.

Exception: PoE circuits shall be classified as communications ~~and~~ , or Class 2 or Class 3.

Statement of Problem and Substantiation for Public Comment

The PC is an editorial clarification.

Related Public Comments for This Document

Related Comment	Relationship
Public Comment No. 1567-NFPA 70-2024 [Article 722]	

Related Item

- Global FCR-238

Submitter Information Verification

Submitter Full Name: David Kiddoo
Organization: CCCA
Affiliation: Communications Cable & Connectivity Association
Street Address:
City:
State:
Zip:

Submittal Date: Sat Jul 27 11:20:06 EDT 2024
Committee: NEC-P03

Public Comment No. 285-NFPA 70-2024 [Section No. 722.140(B)(4)]

(4) Use of Class 2-LP ~~or~~ , Class 3-LP and Communications LP Cables to Transmit Power and Data.

Type CL3P-LP, Type CL2P-LP, Type CL3R-LP, Type CL2R-LP, Type CL3-LP, ~~or~~ Type CL2-LF, CMP-LP, CMR-LP and CM-LP cables shall be permitted to supply power to equipment from a power source with a rated current per conductor up to the marked current limit located immediately following the suffix "-LP" and shall be permitted to transmit data to the equipment. Where the number of bundled LP cables is 192 or less and the selected ampacity of the cables in accordance with Table 722.140(B)(4) exceeds the marked current limit of the cable, the ampacity determined from the table shall be permitted to be used. For ambient temperatures above 30°C (86°F), the correction factors of Table 310.15(B)(1)(1) or Equation 310.15(B) shall apply. The Class 2-LP and Class 3-LP cables shall comply with the following, as applicable:

(1) Cables with the suffix "-LP" shall be permitted to be installed in bundles, raceways, cable trays, communications raceways, and cable routing assemblies.

(2) Cables with the suffix "-LP" and a marked current limit shall follow the substitution hierarchy of 722.122 for the cable type without the suffix "-LP" and without the marked current limit.

(3) System design shall be permitted by qualified persons under engineering supervision.

Informational Note: An example of the marking on a 23 AWG, 4-pair, Class 2 cable rated 75°C (167°F) with an LP current rating of 0.6 amperes per conductor is "CL2-LP(0.6A) 75°C 23 AWG 4-pair". See 722.100(A)(9).

Table 722.140(B)(4) Ampacities of Each Conductor in Amperes in 4-Pair Class 2 or Class 3 Balanced Twisted-Pair Cables Based on Copper Conductors at an Ambient Temperature of 30°C (86°F) with All Conductors in All Cables Carrying Current, 60°C (140°F), 75°C (167°F), and 90°C (194°F) Rated Cables

AWG	Number of 4-Pair Cables in a Bundle																	
	1–7			8–19			20–37			38–61			62–91			92–192		
	Temperature Rating			Temperature Rating			Temperature Rating			Temperature Rating			Temperature Rating			Temperature Rating		
	60°C	75°C	90°C	60°C	75°C	90°C	60°C	75°C	90°C	60°C	75°C	90°C	60°C	75°C	90°C	60°C	75°C	90°C
26	1	1.23	1.42	0.71	0.87	1.02	0.55	0.68	0.78	0.46	0.57	0.67	0.45	0.55	0.64	NA	NA	NA
24	1.19	1.46	1.69	0.81	1.01	1.17	0.63	0.78	0.91	0.55	0.67	0.78	0.46	0.56	0.65	0.4	0.48	0.55
23	1.24	1.53	1.78	0.89	1.11	1.28	0.77	0.95	1.1	0.66	0.8	0.93	0.58	0.71	0.82	0.45	0.55	0.63
22	1.5	1.86	2.16	1.04	1.28	1.49	0.77	0.95	1.11	0.66	0.82	0.96	0.62	0.77	0.89	0.53	0.63	0.72

Notes:

1. For bundle sizes over 192 cables, or for conductor sizes smaller than 26 AWG, ampacities shall be permitted to be determined by qualified personnel under engineering supervision.

2. Where only half of the conductors in each cable are carrying current, the values in the table shall be permitted to be increased by a factor of 1.4.

Informational Note No. 1: Elevated cable temperatures can reduce a cable's data transmission performance. For information on practices for 4-pair balanced twisted pair cabling, see TIA-TSB-184-A, *Guidelines for Supporting Power Delivery Over Balanced Twisted-Pair Cabling*, and ANSI/TIA-568-C., *Balanced Twisted-Pair Telecommunications Cabling and Components Standard*, 6.4.7, 6.6.3, and Annex G, which provide guidance on adjustments for operating temperatures between 20°C and 60°C (68°F and 140°F).

Informational Note No. 2: The per-contact current rating of connectors can limit the maximum allowable current below the ampacity shown in Table 722.140.

Statement of Problem and Substantiation for Public Comment

Article 722 includes communications LP cables in addition to Class 2 & Class 3 LP cables. Communications LP cables need to be included for completeness.

Related Public Comments for This Document

Related Comment	Relationship
Public Comment No. 1567-NFPA 70-2024 [Article 722]	

Related Item

- Global FCR-238

Submitter Information Verification

Submitter Full Name: David Kiddoo
Organization: CCCA
Affiliation: Communications Cable & Connectivity Association
Street Address:
City:
State:
Zip:

Submittal Date: Sat Jul 27 11:27:31 EDT 2024
Committee: NEC-P03

Public Comment No. 1491-NFPA 70-2024 [Section No. 722.150]

722.150 Applications ~~, Installations, and Wiring Methods for Class 4 Circuit Cables~~ .

~~**(A)** Applications.~~

Class 4 cables shall

~~not be permitted for any application that is not part of a Class 4 system.~~

~~*Exception: Use of Class 4 cable for other applications shall be permitted if the cable has been listed as suitable for other applications.*~~

~~**(B)** Installation in Dwelling Units.~~

~~Where Class 4 cables are used in a dwelling unit, 722.150(C) shall apply.~~

~~**(C)** Ampacity.~~

~~The ampacity of Class 4 cables shall comply with 720.6(B)(1) based on the temperature rating of the Class 4 cable for conductors sized 16 AWG to 6 AWG. For conductors sized 24 AWG to 17 AWG, the Class 4 cable shall have an ampacity in accordance with the marking FMP-XXA, where XX is the maximum ampacity permitted. In a dwelling unit(s), not more than 20 current- carrying conductors shall be installed without maintaining spacing.~~

~~Informational Note No. 1: See 722.100(A)(16) for additional Class 4 cable requirements.~~

~~Informational Note No. 2: See UL 1400-1-2022, *Outline of Investigation for Fault-Managed Power Systems — Part 1: General Requirements* ; and UL 1400-2-2023, *Outline of Investigation for Fault-Managed Power Systems — Part 2: Requirements for Class 4 Cables* , for information on determining maximum ampacities.~~

only be permitted for the following applications:

(1) Class 4 systems

(2) Other applications as permitted by the cable listing

Additional Proposed Changes

File Name	Description	Approved
Limited_Energy_Roster-2026_2nd_Draft.pdf	Limited-Energy Task Group Roster-2nd Draft	

Statement of Problem and Substantiation for Public Comment

This public comment is submitted on behalf of the Limited-Energy Task Group (see attached roster) to:
(1) Revises 722.150 language into positive code text and list format for usability and enforceability.
(2) Delete (C) of 722.150 as it has been relocated to a new 722.151 for class 4 cable construction requirements.
(3) Delete (B) of 722.150 as it has been relocated to new 722.152 for class 4 cable installation requirements.

Related Public Comments for This Document

Related Comment	Relationship
Public Comment No. 1432-NFPA 70-2024 [New Section after 722.150(C)]	PC to relocate deleted text to new section 722.151
Public Comment No. 1434-NFPA 70-2024 [New Section after 722.150(C)]	PC to relocate deleted text to new section 722.152
Public Comment No. 1487-NFPA 70-2024 [Section No. 722.12]	PC that deletes section 722.12 as it is moved to 722.150.

Related Item

- FCR-238

Submitter Information Verification

Submitter Full Name: Kyle Krueger
Organization: NECA
Affiliation: NECA
Street Address:
City:
State:
Zip:

Submittal Date: Fri Aug 23 15:17:03 EDT 2024
Committee: NEC-P03

Limited Energy Task Group [2nd Draft]					
No.	First Name	Last Name	Class.	Organization	Other Committees
1	Kyle	Krueger	[I/M]	NECA	NEC-Correlating Comittee CMP 3 NFPA 72-Correlating Committee
2	Ernie	Gallo	[U/T]	NEBScore	
3	Derrick	Atkins	[L]	Minneapolis Electrical JA	NEC-Correlating Committee CMP 5
4	Anthony	Tassone	[R/T]	UL Solutions	CMP 3 CMP 16
5	Chad	Jones	[M]	Cisco	CMP 3
6	Sam	Rokowski	[I/M]	Maddox Inc.	CMP 3
7	George	Bish	[M]	Amazon/Ring Protect Inc	CMP 16
8	Trevor	Bowmer	[U]	Telecom Consulting	NEC Correlating Committee CMP 16
9	Ronald	Tellas	[M]	CCCA	CMP 3 CMP 16
10	Tim	Mikloiche	[E]	IAEI	CMP 3
11	Ryan	Jackosn	[M]	Steel Tube Industry	CMP 3
12	Diana	Lettkeman	[M]	Dish	CMP 16
13	John	Kacperski	[L]	IBEW	CMP 16

Public Comment No. 1432-NFPA 70-2024 [New Section after 722.150(C)]

722.151 Class 4 Cable Construction and Rating.

(A) Class 4 Cable Construction.

(1) Sizes.

Conductors of sizes not smaller than 24 AWG shall be permitted to be used.

(1) Insulation.

Insulation on conductors shall be rated not less than 450 volts dc.

(1) Voltage Rating.

Cables shall have a voltage rating of not less than 450 volts dc. Voltage ratings shall not be marked on the cables.

(1) Temperature Rating.

Cables shall have a temperature rating of not less than 60°C (140°F).

(B) Ampacity.

The ampacity of Class 4 cables shall comply with 720.6(B)(1) based on the temperature rating of the Class 4 cable for conductors sized 16 AWG to 6 AWG. For conductors sized 24 AWG to 17 AWG, the Class 4 cable shall have an ampacity in accordance with by the marking FMP-XXA, where XX is the maximum ampacity permitted. In a dwelling unit(s), not more than 20 current- carrying conductors shall be installed without maintaining spacing.

Informational Note: See UL 1400-1–2022, *Outline of Investigation for Fault-Managed Power Systems — Part 1: General Requirements* , and UL 1400-2–2023, *Outline of Investigation for Fault-Managed Power Systems — Part 2: Requirements for Class 4 Cables* , for information on determining maximum ampacities.

Additional Proposed Changes

File Name	Description	Approved
Limited_Energy_Roster-2026_2nd_Draft.pdf	Limited-Energy Task Group Roster-2nd Draft	

Statement of Problem and Substantiation for Public Comment

This public comment is submitted on behalf of the Limited-Energy Task Group (see attached roster) to further refine the limited-energy reorganization work that was completed in the first draft. This public comment will accomplish the following:
(1) Create a new separate section 722.151 containing all the requirements for Class 4 cable construction and ratings.

(2) Relocate the requirements for Class 4 cable construction requirements from section 722.100(A)(16) that have been deleted by another PC submitted by this task group, as moving these requirements to section 722.151 with the other Class 4 cabling requirements is more appropriate and logical for usability.

(3) Relocate ampacity requirements for Class 4 cables and associated Informational Note, that were deleted by a PC submitted by this task group from section 722.150(C) to the more appropriate location for cable construction and ratings in 722,151(B).

Related Public Comments for This Document

Related Comment	Relationship
Public Comment No. 1428-NFPA 70-2024 [Section No. 722.100(A)]	PC deleting info note 4 from 722.100(A) as it is now located in 722.150.
Public Comment No. 1429-NFPA 70-2024 [Section No. 722.100(A)(16)]	PC deleting section 722.100(A)(16) as it is relocated to 722.150.
Public Comment No. 1430-NFPA 70-2024 [Section No. 726.139]	PC deleting section 726.139 as these requirements are relocated to 722.150-152.
Public Comment No. 1431-NFPA 70-2024 [Section No. 722.150(A)]	PC revising 722.150(A) and adding info note from 722.100(A).
Public Comment No. 1434-NFPA 70-2024 [New Section after 722.150(C)]	PC adding new section 722.152 to house class 4 cable requirements from 726.139.
Public Comment No. 1428-NFPA 70-2024 [Section No. 722.100(A)]	
Public Comment No. 1429-NFPA 70-2024 [Section No. 722.100(A)(16)]	
Public Comment No. 1430-NFPA 70-2024 [Section No. 726.139]	
Public Comment No. 1434-NFPA 70-2024 [New Section after 722.150(C)]	
Public Comment No. 1491-NFPA 70-2024 [Section No. 722.150]	

Related Item

- FCR-238

Submitter Information Verification

Submitter Full Name: Kyle Krueger
Organization: NECA
Affiliation: NECA
Street Address:
City:
State:
Zip:
Submittal Date: Thu Aug 22 15:54:24 EDT 2024
Committee: NEC-P03

Limited Energy Task Group [2nd Draft]					
No.	First Name	Last Name	Class.	Organization	Other Committees
1	Kyle	Krueger	[I/M]	NECA	NEC-Correlating Comittee CMP 3 NFPA 72-Correlating Committee
2	Ernie	Gallo	[U/T]	NEBScore	
3	Derrick	Atkins	[L]	Minneapolis Electrical JA	NEC-Correlating Committee CMP 5
4	Anthony	Tassone	[R/T]	UL Solutions	CMP 3 CMP 16
5	Chad	Jones	[M]	Cisco	CMP 3
6	Sam	Rokowski	[I/M]	Maddox Inc.	CMP 3
7	George	Bish	[M]	Amazon/Ring Protect Inc	CMP 16
8	Trevor	Bowmer	[U]	Telecom Consulting	NEC Correlating Committee CMP 16
9	Ronald	Tellas	[M]	CCCA	CMP 3 CMP 16
10	Tim	Mikloiche	[E]	IAEI	CMP 3
11	Ryan	Jackosn	[M]	Steel Tube Industry	CMP 3
12	Diana	Lettkeman	[M]	Dish	CMP 16
13	John	Kacperski	[L]	IBEW	CMP 16

Public Comment No. 1434-NFPA 70-2024 [New Section after 722.150(C)]

722.152. Installation and Wiring Methods for Class 4 Circuit Cables.

(A) Installation in Dwelling Units.

Where Class 4 cables are used in dwelling units, 722.150(C) shall apply.

(B) Two or More Class 4 Circuits.

Conductors of two or more Class 4 circuits shall be permitted within the same cables, enclosure, raceway, or cable routing assembly.

(C) Class 4 Circuits with Class 2, Class 3, or Communications Circuits.

(1) Within the Same Cable.

Conductors of one or more Class 4 circuitrs shall be permitted within the same cable assembly as conductors of a Class 2, Class 3, or communications circuits if the insulation of the Class 2, Class 3, or communications circuit conductors in the cable is at least that required for Class 4 circuits.

(2) Within the Same Enclosure, Raceway, or Cable Routing Assembly.

Class 4 cables shall be permitted within the same enclosure, raceway, or cable routing assembly as Class 2, Class 3, or communications circuits.

Additional Proposed Changes

File Name	Description	Approved
Limited_Energy_Roster-2026_2nd_Draft.pdf	Limited-Energy Task Group Roster-2nd Draft	

Statement of Problem and Substantiation for Public Comment

This public comment is submitted on behalf of the Limited-Energy Task Group (see attached roster) to further refine the limited-energy reorganization work that was completed in the first draft. This public comment seeks to accomplish the following:

(1) Create a new section 722.152 for installation and wiring methods for Class 4 Circuit Cables.

(2) Relocate the Class 4 dwelling unit installation requirements deleted in section 722.150(B) by a PC submitted by this Task Group, to new section 722.152(A).

(3) Relocate the Class 4 cable installations requirements that were deleted from section 726.139(A)-(C) by a PC submitted by this Task Group, to a new location in section 722.152(B)-(D).

(4) Update the references in section 722.152(D)(1)-(4) so they are correct based on the 1st draft limited-energy reorganization.

(5) Using the term limited-energy cables in the title as the term more inclusive for all installations covered by 722 and is newly defined in Article 100 by PC-1371.

Related Public Comments for This Document

Related Comment	Relationship
Public Comment No. 1428-NFPA 70-2024 [Section No. 722.100(A)]	PC deleting info note 4 from 722.100(A) as it is now located in 722.150.
Public Comment No. 1429-NFPA 70-2024 [Section No. 722.100(A)(16)]	PC deleting section 722.100(A)(16) as it is relocated to 722.150.
Public Comment No. 1430-NFPA 70-2024 [Section No. 726.139]	PC deleting section 726.139 as these requirements are relocated to 722.150-152.
Public Comment No. 1431-NFPA 70-2024 [Section No. 722.150(A)]	PC revising 722.150(A) and adding info note from 722.100(A).
Public Comment No. 1432-NFPA 70-2024 [New Section after 722.150(C)]	PC creating section 722.151 to house the requirements deleted from 722.100(A)(16).
Public Comment No. 1428-NFPA 70-2024 [Section No. 722.100(A)]	
Public Comment No. 1429-NFPA 70-2024 [Section No. 722.100(A)(16)]	
Public Comment No. 1430-NFPA 70-2024 [Section No. 726.139]	
Public Comment No. 1432-NFPA 70-2024 [New Section after 722.150(C)]	
Public Comment No. 1491-NFPA 70-2024 [Section No. 722.150]	

Related Item

- FCR-238

Submitter Information Verification

Submitter Full Name: Kyle Krueger
Organization: NECA
Affiliation: NECA
Street Address:
City:
State:
Zip:

Submittal Date: Thu Aug 22 15:56:15 EDT 2024
Committee: NEC-P03

Limited Energy Task Group [2nd Draft]					
No.	First Name	Last Name	Class.	Organization	Other Committees
1	Kyle	Krueger	[I/M]	NECA	NEC-Correlating Comittee CMP 3 NFPA 72-Correlating Committee
2	Ernie	Gallo	[U/T]	NEBScore	
3	Derrick	Atkins	[L]	Minneapolis Electrical JA	NEC-Correlating Committee CMP 5
4	Anthony	Tassone	[R/T]	UL Solutions	CMP 3 CMP 16
5	Chad	Jones	[M]	Cisco	CMP 3
6	Sam	Rokowski	[I/M]	Maddox Inc.	CMP 3
7	George	Bish	[M]	Amazon/Ring Protect Inc	CMP 16
8	Trevor	Bowmer	[U]	Telecom Consulting	NEC Correlating Committee CMP 16
9	Ronald	Tellas	[M]	CCCA	CMP 3 CMP 16
10	Tim	Mikloiche	[E]	IAEI	CMP 3
11	Ryan	Jackosn	[M]	Steel Tube Industry	CMP 3
12	Diana	Lettkeman	[M]	Dish	CMP 16
13	John	Kacperski	[L]	IBEW	CMP 16

Public Comment No. 792-NFPA 70-2024 [Section No. 722.150(C)]

(C) Ampacity.

The ampacity of Class 4 cables shall comply with ~~720.6(B)(1)~~ - 310.15 based on the temperature rating of the Class 4 cable for conductors sized 16 AWG to 6 AWG. For conductors sized 24 AWG to 17 AWG, the Class 4 cable shall have an ampacity in accordance with the marking FMP-XXA, where XX is the maximum ampacity permitted. In a dwelling unit(s), not more than 20 current- carrying conductors shall be installed without maintaining spacing.

Informational Note No. 1: See 722.100(A)(16) for additional Class 4 cable requirements.

Informational Note No. 2: See UL 1400-1-2022, *Outline of Investigation for Fault-Managed Power Systems — Part 1: General Requirements*, and UL 1400-2-2023, *Outline of Investigation for Fault-Managed Power Systems — Part 2: Requirements for Class 4 Cables*, for information on determining maximum ampacities.

Statement of Problem and Substantiation for Public Comment

FR-8442 specifically asked to fix the typo of 300.15 in the 2023 code and the panel agreed to make this change to 310.15, which is the proper section for ampacity of conductors. When the panel voted, I noted that it wasn't changed to 310.15, but instead 300.17. Somehow this was further changed to 720.6(B)(1) without panel input (at least none that I am aware of). 720.6(B)(1) merely points the user to Chapter 9 and I find no mention of allowing (or requiring) the use 310.15 to adjust the ampacity of conductors based on the temperature rating of the cable. So now we've TOTALLY LOST the requirement.
This PC tries to get the text back to the original solution for FR-8442, changing 720.6(B)(1) back to 310.15.

Related Item

- fr-8442

Submitter Information Verification

Submitter Full Name: Chad Jones
Organization: Cisco Systems
Street Address:
City:
State:
Zip:

Submittal Date: Mon Aug 05 12:21:26 EDT 2024
Committee: NEC-P03

Public Comment No. 1424-NFPA 70-2024 [Section No. 722.160]

722.160 Applications of Listed Optical Fiber Cables.

(A) General.

Permitted and nonpermitted applications of listed optical fiber cables shall be as indicated in Table 722.160. The permitted applications shall be subject to the installation requirements of 722.161 and 722.162. The substitutions for optical fiber cables in Table 722.165 and illustrated in Figure 722.165 shall be permitted.

Table 722. ~~160 Applications~~ **160(A) Applications of Listed Optical Fiber Cables in Buildings**

Applications		**Listed Optical Fiber Cable Type**			
		OFNP, OFCP	**OFNR, OFCR**	**OFNG, OFCG, OFN, OFC**	
In ducts specifically fabricated for environmental air as described in 720.22(B).	In fabricated ducts	Y	N	N	
	In metal raceway that complies with 720.22(B)	Y	Y	Y	
In other spaces used for environmental air (plenums) as described in 720.22(C)	In other spaces used for environmental air	Y	N	N	
	-	In metal raceway that complies with 720.22(C)	Y	Y	Y
	-	In plenum communications raceways	Y	N	N
	-	In plenum cable routing assemblies	Y	N	N
	-	Supported by open metal cable trays	Y	N	N
	-	Supported by solid bottom metal cable trays with solid metal covers	Y	Y	Y
In risers	In vertical runs	Y	Y	N	
	In metal raceways	Y	Y	Y	
	In fireproof shafts	Y	Y	Y	
	In plenum communications raceways	Y	Y	N	
	In plenum cable routing assemblies	Y	Y	N	
	In riser communications raceways	Y	Y	N	
	In riser cable routing assemblies	Y	Y	N	
	In one- and two-family dwellings	Y	Y	Y	
Within buildings in other than air-handling spaces and risers	General	Y	Y	Y	
	-	Supported by cable trays	Y	Y	Y
	-	In distributing frames and cross-connect arrays	Y	Y	Y
	-	In any raceway recognized in Chapter 3	Y	Y	Y
	-	In plenum communications raceway	Y	Y	Y
	-	In plenum cable routing assemblies	Y	Y	Y
	-	In riser communications raceways	Y	Y	Y
	-	In riser cable routing assemblies	Y	Y	Y
	-	In general-purpose communications raceways	Y	Y	Y
	-	In general-purpose cable routing assemblies	Y	Y	Y

Note: "N" indicates that the cable type shall not be permitted to be installed in the application. "Y" indicates that the cable type shall be permitted to be installed in the application subject to the limitations described in 722.161 and 722.162.

Informational Note No.1: ~~Article 722 , Part III of covers installation methods within buildings. Table 722.160 covers the applications of listed optical fiber cables in buildings. The~~ See UL 1651, *Optical Fiber Cable*, for applicable requirements for listing of optical fiber cable.

Informational Note No. 2: See the definition of *point of entrance* is in Article 100.

~~Informational Note No. 2: For information on the restrictions to the installation of optical fiber cables in ducts specifically fabricated for environmental air, see 722.161(B) .~~

(B) Field-Assembled Optical Fiber Cables.

Field-assembled optical fiber cables shall comply with 722.160(B)(1)-(4).

(1) The specific combination of jacket and optical fibers intended to be installed as a field-assembled optical fiber cable shall be one of the following cable types:

(a) Plenum Cable

(b) Riser Cable

(c) General Purpose Cable

(2) Shall be marked in accordance with Table 722.100(A).

(3)The jacket of field-assembled optical fiber cable shall have a surface marking indicating the specific optical fibers with which it is identified for use.

(4) The optical fibers shall have a permanent marking, such as marker tape, indicating the jacket with which they are identified for use.

The jacket without fibers shall meet the listing requirements for communications raceways in 723.2 in accordance with the able marking.

Additional Proposed Changes

File Name	Description	Approved
Limited_Energy_Roster-2026_2nd_Draft.pdf	Limited-Energy Task Group Roster-2nd Draft	

Statement of Problem and Substantiation for Public Comment

This public comment is submitted on behalf of the Limited-Energy Task Group (see attached roster) to provide better usability and style manual compliance by making the following revisions:
(1) Relocate Informational Note No. 3 from section 722.100(A) to the optical fiber cable application section/table 722.160(A), as this informational note specifically applies to the application, listing and use of optical fiber cables.
(2) Revise incorrect and unnecessary references of Informational Note No. 2.
(3) Delete Informational Note No. 3 as it references a section that no longer exists and the new location of the referenced requirement is the next section. Relocate the requirements for Field-Assembled Optical Fiber Cables from 722.100(A)(12) to section 722,160(B) with the rest of the optical fiber cable requirements.

Related Public Comments for This Document

Related Comment	Relationship
Public Comment No. 1421-NFPA 70-2024 [Section No. 722.100(A)]	PC deleting info note 3 from 722.100(A)
Public Comment No. 1423-NFPA 70-2024 [Section No. 722.100(A)(12)]	PC deleting section 722.100(A)(12) as it is now in section 722.160(A)-(B)
Public Comment No. 1421-NFPA 70-2024 [Section No. 722.100(A)]	
Public Comment No. 1423-NFPA 70-2024 [Section No. 722.100(A)(12)]	

Related Item

- FCR-238

Submitter Information Verification

Submitter Full Name: Kyle Krueger
Organization: NECA
Affiliation: NECA
Street Address:
City:
State:
Zip:

Submittal Date: Thu Aug 22 15:28:49 EDT 2024
Committee: NEC-P03

Limited Energy Task Group [2nd Draft]					
No.	First Name	Last Name	Class.	Organization	Other Committees
1	Kyle	Krueger	[I/M]	NECA	NEC-Correlating Comittee CMP 3 NFPA 72-Correlating Committee
2	Ernie	Gallo	[U/T]	NEBScore	
3	Derrick	Atkins	[L]	Minneapolis Electrical JA	NEC-Correlating Committee CMP 5
4	Anthony	Tassone	[R/T]	UL Solutions	CMP 3 CMP 16
5	Chad	Jones	[M]	Cisco	CMP 3
6	Sam	Rokowski	[I/M]	Maddox Inc.	CMP 3
7	George	Bish	[M]	Amazon/Ring Protect Inc	CMP 16
8	Trevor	Bowmer	[U]	Telecom Consulting	NEC Correlating Committee CMP 16
9	Ronald	Tellas	[M]	CCCA	CMP 3 CMP 16
10	Tim	Mikloiche	[E]	IAEI	CMP 3
11	Ryan	Jackosn	[M]	Steel Tube Industry	CMP 3
12	Diana	Lettkeman	[M]	Dish	CMP 16
13	John	Kacperski	[L]	IBEW	CMP 16

Public Comment No. 247-NFPA 70-2024 [Section No. 722.160]

~~**722.160** Applications of Listed Optical Fiber Cables.~~

~~Permitted and nonpermitted applications of listed optical fiber cables shall be as indicated in Table 722.160 . The permitted applications shall be subject to the installation requirements of 722.161 and 722.162 . The substitutions for optical fiber cables in Table 722.165 and illustrated in Figure 722.165 shall be permitted.~~

~~Table 722.160 Applications of Listed Optical Fiber Cables in Buildings~~

~~Applications~~	~~Listed Optical Fiber Cable Type~~	~~OFNP, OFCP~~	~~OFNR, OFCR~~	~~OFNG, OFCG, OFN, OFC~~
~~In ducts specifically fabricated for environmental air as described in 720.22(B).~~	~~In fabricated ducts~~	~~Y~~	~~N~~	~~N~~
	~~In metal raceway that complies with 720.22(B)~~	~~Y~~	~~Y~~	~~Y~~
~~In other spaces used for environmental air (plenums) as described in 720.22(C)~~	~~In other spaces used for environmental air~~	~~Y~~	~~N~~	~~N~~
	~~In metal raceway that complies with 720.22(C)~~	~~Y~~	~~Y~~	~~Y~~
~~In plenum communications raceways~~	~~Y~~	~~N~~	~~N~~	
~~In plenum cable routing assemblies~~	~~Y~~	~~N~~	~~N~~	
~~Supported by open metal cable trays~~	~~Y~~	~~N~~	~~N~~	
~~Supported by solid bottom metal cable trays with solid metal covers~~	~~Y~~	~~Y~~	~~Y~~	
~~In risers~~	~~In vertical runs~~	~~Y~~	~~Y~~	~~N~~
	~~In metal raceways~~	~~Y~~	~~Y~~	~~Y~~
	~~In fireproof shafts~~	~~Y~~	~~Y~~	~~Y~~
~~In plenum communications raceways~~	~~Y~~	~~Y~~	~~N~~	
~~In plenum cable routing assemblies~~	~~Y~~	~~Y~~	~~N~~	
~~In riser communications raceways~~	~~Y~~	~~Y~~	~~N~~	
~~In riser cable routing assemblies~~	~~Y~~	~~Y~~	~~N~~	
~~In one- and two-family dwellings~~	~~Y~~	~~Y~~	~~Y~~	
~~Within buildings in other than air-handling spaces and risers~~	~~General~~	~~Y~~	~~Y~~	~~Y~~
	~~Supported by cable trays~~	~~Y~~	~~Y~~	~~Y~~
~~In distributing frames and cross-connect arrays~~	~~Y~~	~~Y~~	~~Y~~	
	~~In any raceway recognized in Chapter 3~~	~~Y~~	~~Y~~	~~Y~~
~~In plenum communications raceway~~	~~Y~~	~~Y~~	~~Y~~	
~~In plenum cable routing assemblies~~	~~Y~~	~~Y~~	~~Y~~	
~~In riser communications raceways~~	~~Y~~	~~Y~~	~~Y~~	
~~In riser cable routing assemblies~~	~~Y~~	~~Y~~	~~Y~~	
~~In general-purpose communications raceways~~	~~Y~~	~~Y~~	~~Y~~	
~~In general-purpose cable routing assemblies~~	~~Y~~	~~Y~~	~~Y~~	

~~Note: "N" indicates that the cable type shall not be permitted to be installed in the application. "Y" indicates that the cable type shall be permitted to be installed in the application subject to the limitations described in 722.161 and 722.162.~~

~~Informational Note No. 1: Article 722, Part III of covers installation methods within buildings. Table 722.160 covers the applications of listed optical fiber cables in buildings. The definition of *point of entrance* is in Article 100.~~

~~Informational Note No. 2: For information on the restrictions to the installation of optical fiber cables in ducts specifically fabricated for environmental air, see 722.161(B) .~~

Statement of Problem and Substantiation for Public Comment

PC 245 revises Table 722.120 to include the information in Tables 722.120, 722.160 and 722.170 enabling the deletion of redundant tables722.160 and 722.170.

Related Item

- FCR-238

Submitter Information Verification

Submitter Full Name: David Kiddoo
Organization: CCCA
Affiliation: Communications Cable & Connectivity Association
Street Address:
City:
State:
Zip:

Submittal Date: Thu Jul 25 13:01:17 EDT 2024
Committee: NEC-P03

Public Comment No. 1378-NFPA 70-2024 [Section No. 722.161]

722.161 Installation of Optical Fiber Cables.

~~Installation~~ **(A) General.**

(1) Installation of optical fiber cables shall comply with 722.161(A) through 722.161(~~H~~ J).

(2) Installation of ~~raceways and~~ optical fiber cables in raceways shall comply with Article 723, Part II.

(3) Installation of optical fiber cables in cable routing assemblies shall comply with ~~722.110~~ . Article 723, Part III.

(~~A~~ B) Ducts Specifically Fabricated for Environmental Air.

Installations of optical fiber cables in ducts specifically fabricated for environmental air shall be in accordance with 722.161(A)(1) and 722.161(A)(2).

(1) Uses Permitted.

The following cables shall be permitted in ducts specifically fabricated for environmental air as described in 720.22(B) if they are directly associated with the air distribution system:

(1) Up to 1.22 m (4 ft) of Types OFNP and OFCP

(2) Types OFNP, OFCP, OFNR, OFCR, OFNG, OFCG, OFN, and OFC installed in raceways that are installed in compliance with 722.162

Informational Note: See NFPA 90A-2024, *Standard for the Installation of Air-Conditioning and Ventilating Systems*, for information on fire protection of wiring installed in fabricated ducts.

(2) Uses Not Permitted.

Types OFNR, OFCR, OFNG, OFCG, OFN, and OFC shall not be permitted to be installed in ducts specifically fabricated for environmental air as described in 720.22(B).

Informational Note: See NFPA 90A-2024, *Standard for the Installation of Air-Conditioning and Ventilating Systems*, for information on fire protection of wiring installed in fabricated ducts.

(~~B~~ C) Other Spaces Used for Environmental Air (Plenums).

Installations of optical fiber cables in other spaces used for environmental air shall be in accordance with 722.161(B)(1) and 722.161(B)(2).

(1) Uses Permitted.

The following cables shall be permitted in other spaces used for environmental air as described in 720.22(C):

(1) Types OFNP and OFCP

(2) Types OFNP and OFCP installed in plenum communications raceways

(3) Types OFNP and OFCP installed in plenum cable routing assemblies

(4) Types OFNP and OFCP supported by open metal cable tray systems

(5) Types OFNP, OFCP, OFNR, OFCR, OFNG, OFCG, OFN, and OFC installed in raceways that are installed in compliance with 720.22(C)

(6) Types OFNP, OFCP, OFNR, OFCR, OFNG, OFCG, OFN, and OFC supported by solid bottom metal cable trays with solid metal covers in other spaces used for environmental air (plenums), as described in 720.22(C)

(7) Types OFNP, OFCP, OFNR, OFCR, OFNG, OFCG, OFN, and OFC installed in plenum riser and general-purpose communications raceways supported by solid bottom metal cable trays with solid metal covers in other spaces used for environmental air (plenums), as described in 720.22(C)

(2) Risers — Cables in Vertical Runs.

Types OFNR, OFCR, OFNG, OFCG, OFN, and OFC shall not be permitted to be installed in other spaces used for environmental air (plenums).

Informational Note: See NFPA 90A-2024, *Standard for the Installation of Air-Conditioning and Ventilating Systems*, for information on fire protection of wiring installed in other spaces used for environmental air.

(~~C~~ D) Risers — Cables in Vertical Runs.

Installations of optical fiber cables in other spaces used for environmental air shall be in accordance with 722.161(B)(1) and 722.161(B)(2).

(1) Uses Permitted.

The following cables shall be permitted in vertical runs penetrating one or more floors and in vertical runs in a shaft:

(1) Types OFNP, OFCP, OFNR, and OFCR

(2) Types OFNP, OFCP, OFNR, and OFCR installed in the following:

(3) Plenum communications raceways

(4) Plenum cable routing assemblies

(5) Riser communications raceways

(6) Riser cable routing assemblies

(2) Uses Not Permitted.

Types OFNG, OFCG, OFN, and OFC shall not be permitted to be installed in vertical runs.

Informational Note: See 770.26 for firestop requirements for floor penetrations.

(~~D~~ E) Risers — Cables Permitted in Metal Raceways.

The following cables and innerducts shall be permitted in metal raceways in a riser having firestops at each floor:

(1) Types OFNP, OFCP, OFNR, OFCR, OFNG, OFCG, OFN, and OFC

(2) Types OFNP, OFCP, OFNR, OFCR, OFNG, OFCG, OFN, and OFC installed in the following:

(3) Plenum communications raceways (innerduct)

(4) Riser communications raceways (innerduct)

(5) General-purpose communications raceways (innerduct)

Informational Note: See 770.26 for firestop requirements for floor penetrations.

(~~E~~ F) Risers — Cables Permitted in Fireproof Shafts.

The following cables shall be permitted to be installed in fireproof riser shafts having firestops at each floor:

(1) Types OFNP, OFCP, OFNR, OFCR, OFNG, OFCG, OFN, and OFC

(2) Types OFNP, OFCP, OFNR, OFCR, OFNG, OFCG, OFN, and OFC installed in the following:

(3) Plenum communications raceways

(4) Plenum cable routing assemblies

(5) Riser communications raceways

(6) Riser cable routing assemblies

(7) General-purpose communications raceways

(8) General-purpose cable routing assemblies

Informational Note: See 770.26 for firestop requirements for floor penetrations.

(~~F~~ G) Risers — Cables Permitted in One- and Two-Family Dwellings.

The following cables shall be permitted in one- and two-family dwellings:

(1) Types OFNP, OFCP, OFNR, OFCR, OFNG, OFCG, OFN, and OFC

(2) Types OFNP, OFCP, OFNR, OFCR, OFNG, OFCG, OFN, and OFC installed in the following:

(3) Plenum communications raceways

(4) Plenum cable routing assemblies

(5) Riser communications raceways

(6) Riser cable routing assemblies

(7) General-purpose communications raceways

(8) General-purpose cable routing assemblies

(~~G~~ H) Cable Trays — Cables Permitted.

The following cables shall be permitted to be supported by cable trays:

(1) Types OFNP, OFCP, OFNR, OFCR, OFNG, OFCG, OFN, and OFC

(2) Types OFNP, OFCP, OFNR, OFCR, OFNG, OFCG, OFN, and OFC installed in the following:

(3) Plenum communications raceways

(4) Riser communications raceways

(5) General-purpose communications raceways

(~~H~~ I) Distributing Frames and Cross-Connect Arrays — Cables Permitted.

The following cables shall be permitted to be installed in distributing frames and cross-connect arrays:

(1) Types OFNP, OFCP, OFNR, OFCR, OFNG, OFCG, OFN, and OFC

(2) Types OFNP, OFCP, OFNR, OFCR, OFNG, OFCG, OFN, and OFC installed in the following:

(3) Plenum communications raceways

(4) Plenum cable routing assemblies

(5) Riser communications raceways

(6) Riser cable routing assemblies

(7) General-purpose communications raceways

(8) General-purpose cable routing assemblies

(~~I~~ J) Other Building Locations — Cables Permitted.

The following cables shall be permitted to be installed in building locations other than the locations covered in 722.161(A) through 722.161(G):

(1) Types OFNP, OFCP, OFNR, OFCR, OFNG, OFCG, OFN, and OFC

(2) Types OFNP, OFCP, OFNR, OFCR, OFNG, OFCG, OFN, and OFC installed in the following:

(3) Plenum communications raceways

(4) Plenum cable routing assemblies

(5) Riser communications raceways

(6) Riser cable routing assemblies

(7) General-purpose communications raceways

(8) General-purpose cable routing assemblies

(9) Types OFNP, OFCP, OFNR, OFCR, OFNG, OFCG, OFN, and OFC installed in a raceway of a type recognized in Chapter 3

Additional Proposed Changes

File Name	Description	Approved
Limited_Energy_Roster-2026_2nd_Draft.pdf	Limited-Energy Task Group Roster-2nd Draft	

Statement of Problem and Substantiation for Public Comment

This Public Comment is submitted on behalf of the Limited-Energy Task Group (see attached roster) to correct the references in section 722.161 to correctly refer to the appropriate parts of new Article 723 created by a companion Public Comment from this Task Group.
See Companion PC-1312

Related Public Comments for This Document

Related Comment	Relationship
Public Comment No. 1312-NFPA 70-2024 [New Section after 722.182]	PC creating new Article 723 for Raceways, Cable Routing Assemblies and Cable Trays for Limited Energy Installations.

Related Item

• FCRF-238

Submitter Information Verification

Submitter Full Name: Kyle Krueger
Organization: NECA
Affiliation: NECA
Street Address:
City:
State:
Zip:

Submittal Date: Wed Aug 21 16:41:11 EDT 2024
Committee: NEC-P03

Limited Energy Task Group [2nd Draft]					
No.	First Name	Last Name	Class.	Organization	Other Committees
1	Kyle	Krueger	[I/M]	NECA	NEC-Correlating Comittee CMP 3 NFPA 72-Correlating Committee
2	Ernie	Gallo	[U/T]	NEBScore	
3	Derrick	Atkins	[L]	Minneapolis Electrical JA	NEC-Correlating Committee CMP 5
4	Anthony	Tassone	[R/T]	UL Solutions	CMP 3 CMP 16
5	Chad	Jones	[M]	Cisco	CMP 3
6	Sam	Rokowski	[I/M]	Maddox Inc.	CMP 3
7	George	Bish	[M]	Amazon/Ring Protect Inc	CMP 16
8	Trevor	Bowmer	[U]	Telecom Consulting	NEC Correlating Committee CMP 16
9	Ronald	Tellas	[M]	CCCA	CMP 3 CMP 16
10	Tim	Mikloiche	[E]	IAEI	CMP 3
11	Ryan	Jackosn	[M]	Steel Tube Industry	CMP 3
12	Diana	Lettkeman	[M]	Dish	CMP 16
13	John	Kacperski	[L]	IBEW	CMP 16

Public Comment No. 286-NFPA 70-2024 [Section No. 722.161]

~~**722.161** Installation of Optical Fiber Cables.~~

~~Installation of optical fiber cables shall comply with 722.161(A) through 722.161(H) . Installation of raceways and cable routing assemblies shall comply with 722.110 .~~

~~**(A)** Ducts Specifically Fabricated for Environmental Air.~~

~~Installations of optical fiber cables in ducts specifically fabricated for environmental air shall be in accordance with 722.161(A)(1) and 722.161(A)(2) .~~

~~**(1)** Uses Permitted.~~

~~The following cables shall be permitted in ducts specifically fabricated for environmental air as described in 720.22(B) if they are directly associated with the air distribution system:~~

(1) ~~Up to 1.22 m (4 ft) of Types OFNP and OFCP~~

(2) ~~Types OFNP, OFCP, OFNR, OFCR, OFNG, OFCG, OFN, and OFC installed in raceways that are installed in compliance with 722.162~~

~~Informational Note: See NFPA 90A-2024, *Standard for the Installation of Air-Conditioning and Ventilating Systems* , for information on fire protection of wiring installed in fabricated ducts.~~

~~**(2)** Uses Not Permitted.~~

~~Types OFNR, OFCR, OFNG, OFCG, OFN, and OFC shall not be permitted to be installed in ducts specifically fabricated for environmental air as described in 720.22(B) .~~

~~Informational Note: See NFPA 90A-2024, *Standard for the Installation of Air-Conditioning and Ventilating Systems* , for information on fire protection of wiring installed in fabricated ducts.~~

~~**(B)** Other Spaces Used for Environmental Air (Plenums).~~

~~Installations of optical fiber cables in other spaces used for environmental air shall be in accordance with 722.161(B)(1) and 722.161(B)(2) .~~

~~**(1)** Uses Permitted.~~

~~The following cables shall be permitted in other spaces used for environmental air as described in 720.22(C) :~~

(1) ~~Types OFNP and OFCP~~

(2) ~~Types OFNP and OFCP installed in plenum communications raceways~~

(3) ~~Types OFNP and OFCP installed in plenum cable routing assemblies~~

(4) ~~Types OFNP and OFCP supported by open metal cable tray systems~~

(5) ~~Types OFNP, OFCP, OFNR, OFCR, OFNG, OFCG, OFN, and OFC installed in raceways that are installed in compliance with 720.22(C)~~

(6) ~~Types OFNP, OFCP, OFNR, OFCR, OFNG, OFCG, OFN, and OFC supported by solid bottom metal cable trays with solid metal covers in other spaces used for environmental air (plenums), as described in 720.22(C)~~

(7) ~~Types OFNP, OFCP, OFNR, OFCR, OFNG, OFCG, OFN, and OFC installed in plenum riser and general-purpose communications raceways supported by solid bottom metal cable trays with solid metal covers in other spaces used for environmental air (plenums), as described in 720.22(C)~~

~~**(2)** Risers — Cables in Vertical Runs.~~

~~Types OFNR, OFCR, OFNG, OFCG, OFN, and OFC shall not be permitted to be installed in other spaces used for environmental air (plenums).~~

~~Informational Note: See NFPA 90A-2024, *Standard for the Installation of Air-Conditioning and Ventilating Systems* , for information on fire protection of wiring installed in other spaces used for environmental air.~~

~~**(C)** Risers — Cables in Vertical Runs.~~

~~Installations of optical fiber cables in other spaces used for environmental air shall be in accordance with 722.161(B)(1) and 722.161(B)(2) .~~

~~**(1)** Uses Permitted.~~

~~The following cables shall be permitted in vertical runs penetrating one or more floors and in vertical runs in a shaft:~~

(1) ~~Types OFNP, OFCP, OFNR, and OFCR~~

(2) ~~Types OFNP, OFCP, OFNR, and OFCR installed in the following:~~

(3) ~~Plenum communications raceways~~

(4) ~~Plenum cable routing assemblies~~

(5) ~~Riser communications raceways~~

(6) ~~Riser cable routing assemblies~~

~~**(2)** Uses Not Permitted.~~

~~Types OFNG, OFCG, OFN, and OFC shall not be permitted to be installed in vertical runs.~~

~~Informational Note: See 770.26 for firestop requirements for floor penetrations.~~

~~**(D)** Risers — Cables Permitted in Metal Raceways.~~

~~The following cables and innerducts shall be permitted in metal raceways in a riser having firestops at each floor:~~

(1) ~~Types OFNP, OFCP, OFNR, OFCR, OFNG, OFCG, OFN, and OFC~~

(2) ~~Types OFNP, OFCP, OFNR, OFCR, OFNG, OFCG, OFN, and OFC installed in the following:~~

(3) ~~Plenum communications raceways (innerduct)~~

(4) ~~Riser communications raceways (innerduct)~~

(5) ~~General-purpose communications raceways (innerduct)~~

~~Informational Note: See 770.26 for firestop requirements for floor penetrations.~~

~~**(E)** Risers — Cables Permitted in Fireproof Shafts.~~

~~The following cables shall be permitted to be installed in fireproof riser shafts having firestops at each floor:~~

(1) ~~Types OFNP, OFCP, OFNR, OFCR, OFNG, OFCG, OFN, and OFC~~

(2) ~~Types OFNP, OFCP, OFNR, OFCR, OFNG, OFCG, OFN, and OFC installed in the following:~~

(3) ~~Plenum communications raceways~~

(4) ~~Plenum cable routing assemblies~~

(5) ~~Riser communications raceways~~

(6) ~~Riser cable routing assemblies~~

(7) ~~General-purpose communications raceways~~

(8) ~~General-purpose cable routing assemblies~~

~~Informational Note: See 770.26 for firestop requirements for floor penetrations.~~

~~**(F)** Risers — Cables Permitted in One- and Two-Family Dwellings.~~

~~The following cables shall be permitted in one- and two-family dwellings:~~

(1) ~~Types OFNP, OFCP, OFNR, OFCR, OFNG, OFCG, OFN, and OFC~~

(2) ~~Types OFNP, OFCP, OFNR, OFCR, OFNG, OFCG, OFN, and OFC installed in the following:~~

(3) ~~Plenum communications raceways~~

(4) ~~Plenum cable routing assemblies~~

(5) ~~Riser communications raceways~~

(6) ~~Riser cable routing assemblies~~

(7) ~~General-purpose communications raceways~~

(8) ~~General-purpose cable routing assemblies~~

~~**(G)** Cable Trays — Cables Permitted.~~

~~The following cables shall be permitted to be supported by cable trays:~~

(1) ~~Types OFNP, OFCP, OFNR, OFCR, OFNG, OFCG, OFN, and OFC~~

(2) ~~Types OFNP, OFCP, OFNR, OFCR, OFNG, OFCG, OFN, and OFC installed in the following:~~

(3) ~~Plenum communications raceways~~

(4) ~~Riser communications raceways~~

(5) ~~General-purpose communications raceways~~

~~**(H)** Distributing Frames and Cross-Connect Arrays — Cables Permitted.~~

~~The following cables shall be permitted to be installed in distributing frames and cross-connect arrays:~~

(1) ~~Types OFNP, OFCP, OFNR, OFCR, OFNG, OFCG, OFN, and OFC~~

(2) ~~Types OFNP, OFCP, OFNR, OFCR, OFNG, OFCG, OFN, and OFC installed in the following:~~

(3) ~~Plenum communications raceways~~

(4) ~~Plenum cable routing assemblies~~

(5) ~~Riser communications raceways~~

(6) ~~Riser cable routing assemblies~~

(7) ~~General-purpose communications raceways~~

(8) ~~General-purpose cable routing assemblies~~

~~(I) Other Building Locations — Cables Permitted.~~

~~The following cables shall be permitted to be installed in building locations other than the locations covered in 722.161(A) through 722.161(G) :~~

(1) ~~Types OFNP, OFCP, OFNR, OFCR, OFNG, OFCG, OFN, and OFC~~

(2) ~~Types OFNP, OFCP, OFNR, OFCR, OFNG, OFCG, OFN, and OFC installed in the following:~~

(3) ~~Plenum communications raceways~~

(4) ~~Plenum cable routing assemblies~~

(5) ~~Riser communications raceways~~

(6) ~~Riser cable routing assemblies~~

(7) ~~General-purpose communications raceways~~

(8) ~~General-purpose cable routing assemblies~~

(9) ~~Types OFNP, OFCP, OFNR, OFCR, OFNG, OFCG, OFN, and OFC installed in a raceway of a type recognized in Chapter 3~~

Statement of Problem and Substantiation for Public Comment

Section 722.161 is not needed because optical fiber cables are included in 722.131.

Related Public Comments for This Document

Related Comment	Relationship
Public Comment No. 1567-NFPA 70-2024 [Article 722]	

Related Item

• Global FCR-238

Submitter Information Verification

Submitter Full Name: David Kiddoo
Organization: CCCA
Affiliation: Communications Cable & Connectivity Association
Street Address:
City:
State:
Zip:

Submittal Date: Sat Jul 27 11:41:24 EDT 2024
Committee: NEC-P03

Public Comment No. 1376-NFPA 70-2024 [Section No. 722.162(A)(1)]

(1) Communications Raceways.

Optical fiber cables shall be permitted to be installed in listed communications raceways selected in accordance with Table ~~722.110(A)~~ 723.20 .

Additional Proposed Changes

File Name	Description	Approved
Limited_Energy_Roster-2026_2nd_Draft.pdf	Limited-Energy Task Group Roster-2nd Draft	

Statement of Problem and Substantiation for Public Comment

This Public Comment is submitted on behalf of the Limited-Energy Task Group (see attached roster) to correct the reference in section 722.162(A)(1) to correctly refer to the appropriate section of new Article 723 (723.20) created by a companion Public Comment from this Task Group.
See Companion PC-1312

Related Public Comments for This Document

Related Comment	Relationship
Public Comment No. 1312-NFPA 70-2024 [New Section after 722.182]	PC creating new Article 723 for Raceways, Cable Routing Assemblies and Cable Trays for Limited-Energy Installations.

Related Item

- FCR-238

Submitter Information Verification

Submitter Full Name: Kyle Krueger
Organization: NECA
Affiliation: NECA
Street Address:
City:
State:
Zip:

Submittal Date: Wed Aug 21 16:21:23 EDT 2024
Committee: NEC-P03

Limited Energy Task Group [2nd Draft]					
No.	First Name	Last Name	Class.	Organization	Other Committees
1	Kyle	Krueger	[I/M]	NECA	NEC-Correlating Comittee CMP 3 NFPA 72-Correlating Committee
2	Ernie	Gallo	[U/T]	NEBScore	
3	Derrick	Atkins	[L]	Minneapolis Electrical JA	NEC-Correlating Committee CMP 5
4	Anthony	Tassone	[R/T]	UL Solutions	CMP 3 CMP 16
5	Chad	Jones	[M]	Cisco	CMP 3
6	Sam	Rokowski	[I/M]	Maddox Inc.	CMP 3
7	George	Bish	[M]	Amazon/Ring Protect Inc	CMP 16
8	Trevor	Bowmer	[U]	Telecom Consulting	NEC Correlating Committee CMP 16
9	Ronald	Tellas	[M]	CCCA	CMP 3 CMP 16
10	Tim	Mikloiche	[E]	IAEI	CMP 3
11	Ryan	Jackosn	[M]	Steel Tube Industry	CMP 3
12	Diana	Lettkeman	[M]	Dish	CMP 16
13	John	Kacperski	[L]	IBEW	CMP 16

Public Comment No. 1377-NFPA 70-2024 [Section No. 722.162(C)]

(C) Cable Routing Assemblies.

Optical fiber cables shall be permitted to be installed in listed cable routing assemblies selected in accordance with Table ~~722.110(B)~~ 723.30 .

Additional Proposed Changes

File Name	Description	Approved
Limited_Energy_Roster-2026_2nd_Draft.pdf	Limited-Energy Task Group Roster-2nd Draft	

Statement of Problem and Substantiation for Public Comment

This Public Comment is submitted on behalf of the Limited-Energy Task Group (see attached roster) to correct the reference in section 722.162(C) to correctly refer to the appropriate section/Table of new Article 723 (723.30) created by a companion Public Comment from this Task Group.
See Companion PC-1312

Related Public Comments for This Document

Related Comment	Relationship
Public Comment No. 1312-NFPA 70-2024 [New Section after 722.182]	PC creating new Article 723 for Raceways, Cable Routing Assemblies, and Cable Tray for Limitied-Energy Installations.

Related Item

- FCR-238

Submitter Information Verification

Submitter Full Name: Kyle Krueger
Organization: NECA
Affiliation: NECA
Street Address:
City:
State:
Zip:

Submittal Date: Wed Aug 21 16:23:23 EDT 2024
Committee: NEC-P03

Limited Energy Task Group [2nd Draft]					
No.	First Name	Last Name	Class.	Organization	Other Committees
1	Kyle	Krueger	[I/M]	NECA	NEC-Correlating Comittee CMP 3 NFPA 72-Correlating Committee
2	Ernie	Gallo	[U/T]	NEBScore	
3	Derrick	Atkins	[L]	Minneapolis Electrical JA	NEC-Correlating Committee CMP 5
4	Anthony	Tassone	[R/T]	UL Solutions	CMP 3 CMP 16
5	Chad	Jones	[M]	Cisco	CMP 3
6	Sam	Rokowski	[I/M]	Maddox Inc.	CMP 3
7	George	Bish	[M]	Amazon/Ring Protect Inc	CMP 16
8	Trevor	Bowmer	[U]	Telecom Consulting	NEC Correlating Committee CMP 16
9	Ronald	Tellas	[M]	CCCA	CMP 3 CMP 16
10	Tim	Mikloiche	[E]	IAEI	CMP 3
11	Ryan	Jackosn	[M]	Steel Tube Industry	CMP 3
12	Diana	Lettkeman	[M]	Dish	CMP 16
13	John	Kacperski	[L]	IBEW	CMP 16

Public Comment No. 1379-NFPA 70-2024 [Section No. 722.163]

722.163 Installation of Optical Fiber Cable in Innerduct.

Listed plenum communications raceways, listed riser communications raceways, and listed general-purpose communications raceways selected in accordance with Table ~~722.110(A)~~ ~~shall~~ 723.20 shall be permitted to be installed as innerduct in any type of listed raceway permitted in Chapter 3.

Additional Proposed Changes

File Name	Description	Approved
Limited_Energy_Roster-2026_2nd_Draft.pdf	Limited-Energy Task Group Roster-2nd Draft	

Statement of Problem and Substantiation for Public Comment

This Public Comment is submitted on behalf of the Limited-Energy Task Group (see attached roster) to correct the reference in section 722.163 to correctly refer to the appropriate section/Table of new Article 723 (723.20) created by a companion Public Comment from this Task Group.
See Companion PC-1312

Related Public Comments for This Document

Related Comment	Relationship
Public Comment No. 1312-NFPA 70-2024 [New Section after 722.182]	PC creating new Article 723 for Raceways, Cable Routing Assemblies and Cable Trays for Limited-Energy installations.

Related Item

- FCR-238

Submitter Information Verification

Submitter Full Name: Kyle Krueger
Organization: NECA
Affiliation: NECA
Street Address:
City:
State:
Zip:

Submittal Date: Wed Aug 21 16:46:59 EDT 2024
Committee: NEC-P03

Limited Energy Task Group [2nd Draft]					
No.	First Name	Last Name	Class.	Organization	Other Committees
1	Kyle	Krueger	[I/M]	NECA	NEC-Correlating Comittee CMP 3 NFPA 72-Correlating Committee
2	Ernie	Gallo	[U/T]	NEBScore	
3	Derrick	Atkins	[L]	Minneapolis Electrical JA	NEC-Correlating Committee CMP 5
4	Anthony	Tassone	[R/T]	UL Solutions	CMP 3 CMP 16
5	Chad	Jones	[M]	Cisco	CMP 3
6	Sam	Rokowski	[I/M]	Maddox Inc.	CMP 3
7	George	Bish	[M]	Amazon/Ring Protect Inc	CMP 16
8	Trevor	Bowmer	[U]	Telecom Consulting	NEC Correlating Committee CMP 16
9	Ronald	Tellas	[M]	CCCA	CMP 3 CMP 16
10	Tim	Mikloiche	[E]	IAEI	CMP 3
11	Ryan	Jackosn	[M]	Steel Tube Industry	CMP 3
12	Diana	Lettkeman	[M]	Dish	CMP 16
13	John	Kacperski	[L]	IBEW	CMP 16

Public Comment No. 1446-NFPA 70-2024 [Section No. 722.164(C)]

(C) With Other Circuits.

~~Conductive~~ Listed conductive and nonconductive optical fiber cables shall be permitted in the same raceway, cable tray, box, enclosure, or cable routing assembly, with ~~conductors of any of the following:~~

(1) ~~Class 2 and Class 3 remote-control, signaling, and power-limited circuits in compliance with 645.6(E)(2) or Article 725, Parts I and II~~

(2) ~~Power-limited fire alarm systems in compliance with Article 760, Parts I and III~~

(3) ~~Communications circuits in compliance with Article 805, Parts I and V~~

(4) ~~Community antenna television and radio distribution systems in compliance with Article 820, Parts I and V~~

(5) ~~Low-power network-powered broadband communications circuits in compliance with Article 830, Parts I and V~~

any other listed limited-energy cable.

Statement of Problem and Substantiation for Public Comment

The recommended text greatly simplifies the code language and adds clarity by simply stating that limited-energy cables can be run together.

Related Public Comments for This Document

Related Comment	Relationship
Public Comment No. 1353-NFPA 70-2024 [Section No. 722.133(A)(1)]	Simplifies text

Related Item

- Global FCR-238

Submitter Information Verification

Submitter Full Name: David Kiddoo
Organization: CCCA
Affiliation: Communications Cable & Connectivity Association
Street Address:
City:
State:
Zip:

Submittal Date: Fri Aug 23 05:22:00 EDT 2024
Committee: NEC-P03

Public Comment No. 1093-NFPA 70-2024 [Section No. 722.166]

~~**722.166** Overhead (Aerial) Optical Fiber Cables.~~

~~Overhead optical fiber cables containing a non-current-carrying metallic member entering buildings shall comply with 722.166(A) and 722.166(B) :~~

~~**(A)** On Poles and In-Span.~~

~~Where outside plant optical fiber cables and electric light or power conductors are supported by the same pole or are run parallel to each other in-span, the conditions described in 722.166(A)(1) through 722.166(A)(4) shall be met.~~

~~**(1)** Relative Location.~~

~~Where practicable, the outside plant optical fiber cables shall be located below the electric light or power conductors.~~

~~**(2)** Attachment to Cross-Arms.~~

~~Attachment of outside plant optical fiber cables to a cross-arm that carries electric light or power conductors shall not be permitted.~~

~~**(3)** Climbing Space.~~

~~The climbing space through outside plant optical fiber cables shall comply with the requirements of 225.14(B) :~~

~~**(4)** Clearance.~~

~~Supply service drops and sets of overhead service conductors of 0 volts to 750 volts running above and parallel to optical fiber cable service drops shall have a minimum separation of 300 mm (12 in.) at any point in the span, including the point of their attachment to the building. Clearance of not less than 1.0 m (40 in.) shall be maintained between the two services at the pole.~~

~~**(B)** Above Roofs.~~

~~Outside plant optical fiber cables shall have a vertical clearance of not less than 2.5 m (8 ft) from all points of roofs above which they pass.~~

~~*Exception No. 1: The requirement of 770.44(B) shall not apply to auxiliary buildings such as garages and the like.*~~

~~*Exception No. 2: A reduction in clearance above only the overhanging portion of the roof to not less than 450 mm (18 in.) shall be permitted if the following applies:*~~

~~*(1) Not more than 1.2 m (4 ft) of optical fiber cable service drop cable passes above the roof overhang.*~~

~~*(2) The cable is terminated at a through- or above-the-roof raceway or approved support.*~~

~~*Exception No. 3: Where the roof has a slope of not less than 100 mm in 300 mm (4 in. in 12 in.), a reduction in clearance to not less than 900 mm (3 ft) shall be permitted.*~~

~~Informational Note: See ANSI/IEEE C2-2017, *National Electric Safety Code, Part 2, Safety Rules for Overhead Lines* , for additional information regarding overhead wires and cables.~~

Statement of Problem and Substantiation for Public Comment

722.166 is redundant. See 800.44

Related Item

- Global FCR-238

Submitter Information Verification

Submitter Full Name: David Kiddoo
Organization: CCCA
Affiliation: Communications Cable & Connectivity Association
Street Address:
City:
State:
Zip:

Submittal Date: Wed Aug 14 11:46:14 EDT 2024
Committee: NEC-P03

Public Comment No. 1095-NFPA 70-2024 [Section No. 722.167]

~~**722.167** Underground Optical Fiber Cables Entering Buildings.~~

~~Underground optical fiber cables entering buildings shall comply with 722.167(A) and 722.167(B) :~~

~~**(A)** Underground Systems with Electric Light, Power, Class 1, or Non-Power-Limited Fire Alarm Circuit Conductors.~~

~~Underground conductive optical fiber cables entering buildings with electric light, power, Class 1, or non-power-limited fire alarm circuit conductors in a raceway, handhole enclosure, or manhole shall be located in a section separated from such conductors by means of brick, concrete, or tile partitions or by means of a suitable barrier.~~

~~**(B)** Direct-Buried Cables and Raceways.~~

~~Direct-buried conductive optical fiber cables shall be separated by at least 300 mm (12 in.) from conductors of any electric light, power, non-power-limited fire alarm circuit conductors, or Class 1 circuit.~~

~~*Exception No. 1: Separation shall not be required where the electric service conductors are installed in raceways or have metal cable armor.*~~

~~*Exception No. 2: Separation shall not be required where electric light or power branch-circuit or feeder conductors, non-power-limited fire alarm circuit conductors, or Class 1 circuit conductors are installed in a raceway or in metal-sheathed, metal-clad, or Type UF, or Type USE cables.*~~

Statement of Problem and Substantiation for Public Comment

722.167 is redundant. See 800.47.

Related Item

• Global FCR-238

Submitter Information Verification

Submitter Full Name: David Kiddoo
Organization: CCCA
Affiliation: Communications Cable & Connectivity Association
Street Address:
City:
State:
Zip:

Submittal Date: Wed Aug 14 11:53:11 EDT 2024
Committee: NEC-P03

Public Comment No. 287-NFPA 70-2024 [Section No. 722.168]

~~**722.168** Unlisted Optical Fiber Cables Entering Buildings.~~

~~**(A)** Conductive and Nonconductive Cables.~~

~~Unlisted conductive and nonconductive outside plant optical fiber cables shall be permitted to be installed in building spaces, other than risers, ducts used for environmental air, plenums used for environmental air, and other spaces used for environmental air, where the length of the cable within the building, measured from its point of entrance, does not exceed 15 m (50 ft) and the cable enters the building from the outside and is terminated in an enclosure. The point of entrance shall be permitted to be extended from the penetration of the external wall, roof, or floor slab by continuously enclosing the entrance optical fiber cables in rigid metal conduit (RMC) or intermediate metal conduit (IMC) to the point of emergence.~~

~~Informational Note: Splice cases or terminal boxes, both metallic and plastic types, typically are used as enclosures for splicing or terminating optical fiber cables.~~

~~**(B)** Nonconductive Cables in Raceway.~~

~~Unlisted nonconductive outside plant optical fiber cables shall be permitted to enter the building from the outside and shall be permitted to be installed in any of the following raceways:~~

(1) ~~Intermediate metal conduit (IMC)~~

(2) ~~Rigid metal conduit (RMC)~~

(3) ~~Rigid polyvinyl chloride conduit (PVC)~~

(4) ~~Electrical metallic tubing (EMT)~~

~~Unlisted nonconductive outside plant cables installed in rigid polyvinyl chloride conduit (PVC) or electrical metallic tubing (EMT) shall not be installed in risers, ducts used for environmental air, plenums used for environmental air, and other spaces used for environmental air.~~

Statement of Problem and Substantiation for Public Comment

Section 770.168 is redundant. All the requirements in the section are included in 800.48.

Related Public Comments for This Document

Related Comment	Relationship
Public Comment No. 1567-NFPA 70-2024 [Article 722]	

Related Item

- Global FCR-238

Submitter Information Verification

Submitter Full Name: David Kiddoo
Organization: CCCA
Affiliation: Communications Cable & Connectivity Association
Street Address:
City:
State:
Zip:

Submittal Date: Sat Jul 27 13:05:40 EDT 2024
Committee: NEC-P03

Public Comment No. 1416-NFPA 70-2024 [Section No. 722.170]

722.170 Applications of Listed PLFA Cables.

PLFA cables shall comply with the requirements described in Table 722.170 or where cable substitutions are made as shown in 722.172. Where substitute cables are installed, the wiring requirements of Article 760, Parts I and III shall apply. Types FPLP-CI, FPLR-CI, and FPL-CI cables shall be permitted to be installed to provide 2-hour circuit integrity rated cables.

Table 722.170 Applications of Listed PLFA Cables in Buildings

Applications		-		Cable Type	
		FPLP and FPLP-CI	FPLR and FPLR-CI	FPL and FPL-CI	
In fabricated ducts as described in 720.22(B)	In fabricated ducts	Y	N	N	
	In metal raceway that complies with 720.22(B)	Y	Y	Y	
In other spaces used for environmental air as described in 720.22I	In other spaces used for environmental air	Y	N	N	
	-	In metal raceway that complies with 720.22I	Y	Y	Y
	-	In plenum communications raceways	Y	N	N
	-	In plenum cable routing assemblies	Y	N	N
	-	Supported by open metal cable trays	Y	N	N
	-	Supported by solid bottom metal cable trays with solid metal covers	Y	Y	Y
In risers	In vertical runs	Y	Y	N	
	-	In metal raceways	Y	Y	Y
	-	In fireproof shafts	Y	Y	Y
	-	In plenum communications raceways	Y	Y	N
	-	In plenum cable routing assemblies	Y	Y	N
	-	In riser communications raceways	Y	Y	N
	-	In riser cable routing assemblies	Y	Y	N
	-	In one- and two-family dwellings	Y	Y	Y
Within buildings in other than air-handling spaces and risers	General	Y	Y	Y	
	-	Supported by cable trays	Y	Y	Y
	-	In any raceway recognized in Chapter 3	Y	Y	Y
	-	In plenum communications raceway	Y	Y	Y
	-	In plenum cable routing assemblies	Y	Y	Y
	-	In riser communications raceways	Y	Y	Y

Applications		-		Cable Type	
		FPLP and FPLP-CI	FPLR and FPLR-CI	FPL and FPL-CI	
	-	In riser cable routing assemblies	Y	Y	Y
	-	In general-purpose communications raceways	Y	Y	Y
	-	In general-purpose cable routing assemblies	Y	Y	Y

Note:

"N" indicates that the cable type shall not be permitted to be installed in the application. "Y" indicates that the cable type shall be permitted to be installed in the application subject to the limitations described in 760.133 through 760.145.

Informational Note: See UL 1424, *Cables for Power-Limited Fire-Alarm Circuits*, for applicable requirements for listing of power-limited fire alarm cable.

Additional Proposed Changes

File Name	Description	Approved
Limited_Energy_Roster-2026_2nd_Draft.pdf	Limited-Energy Task Group Roster-2nd Draft	

Statement of Problem and Substantiation for Public Comment

This public comment is submitted on behalf of the Limited-Energy Task Group (see attached roster) to relocate the Informational Note No. 2 from section 722.100(A) to section/table 722.170 for usability as this informational note specifically applies to PLFA listing requirements.

Related Public Comments for This Document

Related Comment	Relationship
Public Comment No. 1415-NFPA 70-2024 [Section No. 722.100(A)]	PC deleting info note 2 from section 722.100(A)
Public Comment No. 1415-NFPA 70-2024 [Section No. 722.100(A)]	

Related Item

- FCR-238

Submitter Information Verification

Submitter Full Name: Kyle Krueger
Organization: NECA
Affiliation: NECA
Street Address:
City:
State:
Zip:

Submittal Date: Thu Aug 22 15:11:27 EDT 2024
Committee: NEC-P03

Limited Energy Task Group [2nd Draft]					
No.	First Name	Last Name	Class.	Organization	Other Committees
1	Kyle	Krueger	[I/M]	NECA	NEC-Correlating Comittee CMP 3 NFPA 72-Correlating Committee
2	Ernie	Gallo	[U/T]	NEBScore	
3	Derrick	Atkins	[L]	Minneapolis Electrical JA	NEC-Correlating Committee CMP 5
4	Anthony	Tassone	[R/T]	UL Solutions	CMP 3 CMP 16
5	Chad	Jones	[M]	Cisco	CMP 3
6	Sam	Rokowski	[I/M]	Maddox Inc.	CMP 3
7	George	Bish	[M]	Amazon/Ring Protect Inc	CMP 16
8	Trevor	Bowmer	[U]	Telecom Consulting	NEC Correlating Committee CMP 16
9	Ronald	Tellas	[M]	CCCA	CMP 3 CMP 16
10	Tim	Mikloiche	[E]	IAEI	CMP 3
11	Ryan	Jackosn	[M]	Steel Tube Industry	CMP 3
12	Diana	Lettkeman	[M]	Dish	CMP 16
13	John	Kacperski	[L]	IBEW	CMP 16

Public Comment No. 248-NFPA 70-2024 [Section No. 722.170]

~~**722.170** Applications of Listed PLFA Cables.~~

~~PLFA cables shall comply with the requirements described in Table 722.170 or where cable substitutions are made as shown in 722.172 . Where substitute cables are installed, the wiring requirements of Article 760, Parts I and III shall apply. Types FPLP-CI, FPLR-CI, and FPL-CI cables shall be permitted to be installed to provide 2-hour circuit integrity rated cables.~~

~~Table 722.170 Applications of Listed PLFA Cables in Buildings~~

~~- Cable Type Applications FPLP and FPLP-CI FPLR and FPLR-CI FPL and FPL-CI In fabricated ducts as described in 720.22(B) In fabricated ducts Y N N In metal raceway that complies with 720.22(B) Y Y Y In other spaces used for environmental air as described in 720.22I In other spaces used for environmental air Y N N - In metal raceway that complies with 720.22I Y Y Y - In plenum communications raceways Y N N - In plenum cable routing assemblies Y N N - Supported by open metal cable trays Y N N - Supported by solid bottom metal cable trays with solid metal covers Y Y Y In risers In vertical runs Y Y N - In metal raceways Y Y Y - In fireproof shafts Y Y Y - In plenum communications raceways Y Y N - In plenum cable routing assemblies Y Y N - In riser communications raceways Y Y N - In riser cable routing assemblies Y Y N - In one- and two-family dwellings Y Y Y Within buildings in other than air-handling spaces and risers General Y Y Y - Supported by cable trays Y Y Y - In any raceway recognized in Chapter 3 Y Y Y - In plenum communications raceway Y Y Y - In plenum cable routing assemblies Y Y Y - In riser communications raceways Y Y Y - In riser cable routing assemblies Y Y Y - In general-purpose communications raceways Y Y Y - In general-purpose cable routing assemblies Y Y Y~~

~~Note:~~

~~"N" indicates that the cable type shall not be permitted to be installed in the application. "Y" indicates that the cable type shall be permitted to be installed in the application subject to the limitations described in 760.133 through 760.145.~~

Statement of Problem and Substantiation for Public Comment

PC 245 revises Table 722.120 to include the information in Tables 722.120, 722.160 and 722.170 enabling the deletion of redundant tables 722.160 and 722.170.

Related Public Comments for This Document

Related Comment	Relationship
Public Comment No. 1567-NFPA 70-2024 [Article 722]	

Related Item

- Global FCR-238

Submitter Information Verification

Submitter Full Name: David Kiddoo
Organization: CCCA
Affiliation: Communications Cable & Connectivity Association
Street Address:
City:
State:
Zip:

Submittal Date: Thu Jul 25 13:04:38 EDT 2024
Committee: NEC-P03

Public Comment No. 1418-NFPA 70-2024 [Section No. 722.171]

722.171 Wiring Methods and Materials on Load Side of the PLFA Power Source.

Fire alarm circuits on the load side of the power source shall be permitted to be installed using wiring methods and materials in accordance with 722.171(A), 722.171(B), or a combination of both. Article 722, Parts I and II shall apply.

(A) PLFA Wiring Methods and Materials.

Power-limited fire alarm conductors and cables described in 722.170 shall be installed as detailed in 722.171(B)(1) through 722.171(B)(4), and 722.172.

(1) In Raceways, Exposed on Ceilings or Sidewalls, or Fished in Concealed Spaces.

Cable splices or terminations shall be made in listed fittings, boxes, enclosures, fire alarm devices, or utilization equipment. Where installed exposed, cables shall be adequately supported and installed such that maximum protection against physical damage is afforded by building construction such as baseboards, door frames, ledges, and so forth. Where located within 2.1 m (7 ft) of the floor, cables shall be securely fastened in an approved manner at intervals of not more than 450 mm (18 in.).

(2) Passing Through a Floor or Wall.

Cables shall be installed in metal raceways or rigid nonmetallic conduit where passing through a floor or wall to a height of 2.1 m (7 ft) above the floor, unless adequate protection can be afforded by building construction such as detailed in 722.171(A)(1) or unless an equivalent solid guard is provided.

(3) Nonconcealed Spaces.

Cables covered by Chapter 3 used for wiring of PLFA circuits and installed in nonconcealed spaces shall comply with the following:

(1) The cables shall be installed in accordance with 722.~~100~~ 171 (A)(~~15)(a) and~~ 5) and 722.~~100~~ 171 (~~A)(15)(b)~~ B) .

(2) Exposed portions of the cable shall have a length not exceeding 3 m (10 ft).

(4) Portable Fire Alarm Systems.

A portable fire alarm system provided to protect a stage or set when not in use shall be permitted to use wiring methods in accordance with 530.12.

(5) PLFA Wired Using NPLFA Wiring Methods and Materials.

NPLFA wiring methods shall be permitted when used in accordance with 760.46, 760.49, or 760.53 for PLFA circuits. Conductors shall be solid or stranded copper. Separation from electric light, power, Class 1, non-power-limited fire alarm circuit conductors, and medium-power network-powered broadband communications cables shall comply with 760.136.

(B) Power-Limited Fire Alarm ~~Conductor Size.~~ ~~**Cables and Conductors.**~~

(1) Material.

(a) Single conductors and conductors for cables shall be solid or stranded copper.

Exception: Coaxial cables shall be permitted to use 30 percent conductivity copper-covered steel center conductive wire.

(2) Size.

(a) Single conductors shall not be smaller than 18 AWG.

(b) The size of conductors in a multiconductor cable shall not be smaller than 26 AWG.

(c) Conductors of 26 AWG shall be permitted only where spliced with a connector listed as suitable for 26 AWG to 24 AWG or larger conductors that are terminated on equipment or where the 26 AWG conductors are terminated on equipment listed as suitable for 26 AWG conductors.

~~Single conductors shall not be smaller than 18 AWG.(C)~~

(3) Rating.

(a) Cables shall have a voltage rating not less than 300-volts.

(b) Cables shall have a temperature rating not less than 60º C (140ºF).

(C) Support of Conductors.

Power-limited fire alarm circuit conductors shall not be strapped, taped, or attached by any means to the exterior of any conduit or other raceway as a means of support.

Additional Proposed Changes

File Name	Description	Approved
Limited_Energy_Roster-2026_2nd_Draft.pdf	Limited-Energy Task Group Roster-2nd Draft	

Statement of Problem and Substantiation for Public Comment

This Public comment is submitted on behalf of the Limited-Energy Task Group (see attached roster) to delete redundant portions of section 722.100(A)(15) that are already addressed in section 722.171. The unique requirements of this section have been relocated to section 722.171. Additionally, there was positive code language that provided an exception for coaxial cable, this language has been revised into a proper exception to new 722.171(B)(1).
Additionally, this public comment seeks to update the references in section 722.171(A)(3) to the correct sections.

Related Public Comments for This Document

Related Comment	Relationship
Public Comment No. 1417-NFPA 70-2024 [Section No. 722.100(A)(15)]	PC deleting section 722.100(A)(15)
Public Comment No. 1417-NFPA 70-2024 [Section No. 722.100(A)(15)]	

Related Item

- FCR-238

Submitter Information Verification

Submitter Full Name: Kyle Krueger

Organization: NECA
Affiliation: NECA
Street Address:
City:
State:
Zip:
Submittal Date: Thu Aug 22 15:16:11 EDT 2024
Committee: NEC-P03

Limited Energy Task Group [2nd Draft]					
No.	First Name	Last Name	Class.	Organization	Other Committees
1	Kyle	Krueger	[I/M]	NECA	NEC-Correlating Comittee CMP 3 NFPA 72-Correlating Committee
2	Ernie	Gallo	[U/T]	NEBScore	
3	Derrick	Atkins	[L]	Minneapolis Electrical JA	NEC-Correlating Committee CMP 5
4	Anthony	Tassone	[R/T]	UL Solutions	CMP 3 CMP 16
5	Chad	Jones	[M]	Cisco	CMP 3
6	Sam	Rokowski	[I/M]	Maddox Inc.	CMP 3
7	George	Bish	[M]	Amazon/Ring Protect Inc	CMP 16
8	Trevor	Bowmer	[U]	Telecom Consulting	NEC Correlating Committee CMP 16
9	Ronald	Tellas	[M]	CCCA	CMP 3 CMP 16
10	Tim	Mikloiche	[E]	IAEI	CMP 3
11	Ryan	Jackosn	[M]	Steel Tube Industry	CMP 3
12	Diana	Lettkeman	[M]	Dish	CMP 16
13	John	Kacperski	[L]	IBEW	CMP 16

Public Comment No. 937-NFPA 70-2024 [Section No. 722.172]

722.172 Permitted Substitutions for Power-Limited Fire Alarm Cables.

The substitutions for fire alarm cables listed in Table 722.172 and illustrated in Figure 722.172 shall be permitted. Where substitute cables are installed, the wiring requirements of Article 760, Parts I and III shall apply.

Informational Note: See 722.~~100 for~~ 132(A) for information on communications cables (CMP, CMR, CMG, CM).

Table 722.172 Permitted Substitutions for Power-Limited Fire Alarm Cables.

Cable Type	Permitted Substitutions
FPLP	CMP
FPLR	CMP, FPLP, CMR
FPL	CMP, FPLP, CMR, FPLR, CMG, CM

Figure 722.172 Power-Limited Fire Alarm Cable Substitution Hierarchy.

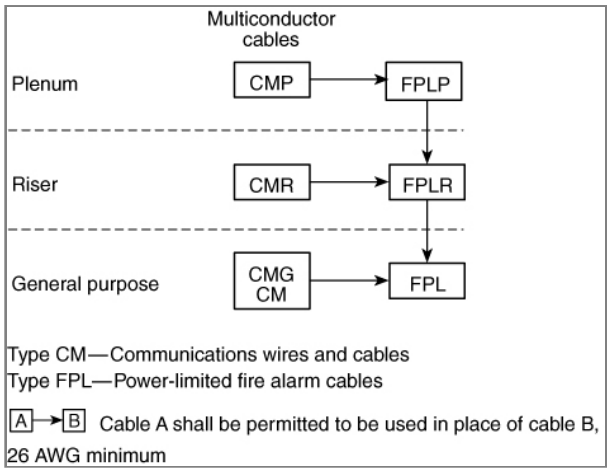

- Beta

Beta feature

Additional Proposed Changes

File Name	Description	Approved

Limited_Energy_Roster-2026_2nd_Draft.pdf Limited-Energy Task Group Roster-2nd Draft

Statement of Problem and Substantiation for Public Comment

This public comment is submitted on behalf of the Limited-Energy Task Group (see attached roster) to update a reference in the informational note to section 722.132(A).

Related Item

- FCR-238

Submitter Information Verification

Submitter Full Name: Kyle Krueger
Organization: NECA
Affiliation: NECA
Street Address:
City:
State:
Zip:

Submittal Date: Wed Aug 07 17:25:31 EDT 2024
Committee: NEC-P03

Limited Energy Task Group [2nd Draft]					
No.	First Name	Last Name	Class.	Organization	Other Committees
1	Kyle	Krueger	[I/M]	NECA	NEC-Correlating Comittee CMP 3 NFPA 72-Correlating Committee
2	Ernie	Gallo	[U/T]	NEBScore	
3	Derrick	Atkins	[L]	Minneapolis Electrical JA	NEC-Correlating Committee CMP 5
4	Anthony	Tassone	[R/T]	UL Solutions	CMP 3 CMP 16
5	Chad	Jones	[M]	Cisco	CMP 3
6	Sam	Rokowski	[I/M]	Maddox Inc.	CMP 3
7	George	Bish	[M]	Amazon/Ring Protect Inc	CMP 16
8	Trevor	Bowmer	[U]	Telecom Consulting	NEC Correlating Committee CMP 16
9	Ronald	Tellas	[M]	CCCA	CMP 3 CMP 16
10	Tim	Mikloiche	[E]	IAEI	CMP 3
11	Ryan	Jackosn	[M]	Steel Tube Industry	CMP 3
12	Diana	Lettkeman	[M]	Dish	CMP 16
13	John	Kacperski	[L]	IBEW	CMP 16

Public Comment No. 1436-NFPA 70-2024 [Section No. 722.180]

722.180 Circuit Integrity (CI) Cable, Fire-Resistive Cable System, or Electrical Circuit Protective System.

(A) General.

CI cable, a fire-resistive cable system, or a listed electrical circuit protective system shall be permitted for use in systems that supply critical circuits to ensure survivability for continued circuit operation for a specified time under fire conditions.

Informational Note No .1 : See *NFPA 72 -2025, National Fire Alarm and Signaling Code , 12.4.3 and 12.4.4 for additional information on fire alarm CI cable, fire-resistive cable systems, or electrical circuit protective systems used for fire alarm circuits to comply with the survivability requirements to maintain the circuit's electrical function during fire conditions for a defined period of time.*

Informational Note No. 2 : See UL 2196, Fire Test for Circuit Integrity of Fire-Resistive Power, Instrumentation, Control and Data Cables, for information on establishing a rating for a fire-resistive cable system. The UL Guide Information for Electrical Circuit Integrity Systems (

~~B)~~

FHIT) contains information to identify the system and its installation limitations to maintain a minimum fire-resistive rating.

Informational Note No 3 : See UL 1724, *Fire Tests for Electrical Circuit Protective Systems* , for information on establishing a rating for an electrical circuit protective system. The *UL Guide Information for Electrical Circuit Integrity Systems (FHIT) contains information to identify the system and its installation limitations to maintain the fire-resistive rating.*

(B) Installation.

(1) Type CI Cables used for survivability of critical circuits and maintain its fire-resistive rating shall only be installed in free air when supported in accordance with 722.180(C)

(2) Type CI Cables shall only be permitted to be installed in a raceway where specifically listed as part of a fire-resistant cable system and marked in accordance with 722.180(D)(3).

(C) Securing and Supporting.

Circuit integrity type CI cable shall be supported at 610 mm (24 in.) maximum intervals in accordance with the following:

(1) Secured to the noncombustible surface of the building structure

(2) Using steel supports and fasteners.

(D) Markings.'

In addition to the general marking requirements for cables in 722.100, Type CI Cables, Fire-Resistant Cables, and Electrical Circuit Protective Systems shall be marked in accordance with (1)-(3):

(1) Type CI Cables. Type CI Cables used for survivability of critical circuits shall be marked with the additional classification using the suffix "CI".

(2) Fire-Resistant Cables. Fire-resistive Cables that are part of a fire-resistive cable system shall be identified with the system indetifier and hourly rating marked on the protectant or the smallest unit container.

(3) Electrical Circit Protective Systems. Protectant for cables of that are part of an electrical circuit protective system shall be identified with the protective system identifier and hourly rating marked on the protectant or the smallest unit container.

Additional Proposed Changes

File Name	Description	Approved
Limited_Energy_Roster-2026_2nd_Draft.pdf	Limited-Energy Task Group Roster-2nd Draft	

Statement of Problem and Substantiation for Public Comment

This Public comment is submitted on behalf of the Limited-Energy Task Group (see attached roster) to delete and relocate the requirements in multiple parts of Article 722 into one common location with the rest of the Type CI Cable requirements to promote usability. This Public Comment serves to accomplish the following:

(1) 722.100(A)(7) for Type CI Cables to section 722.180(B) with the rest of the Type CI Cable requirements.

(2) Delete and relocate section 722.100(A)(7)(a) and Informational Note to section 722.180(B)&(D).

(3) Delete and relocate section 722.100(A)(7)(b) and Informational Note to section 722.180(B)&(D).

(4) Delete and relocate section 722.100(A)(7)(c) and Informational Note to section 722.180(B)&(D).

Related Public Comments for This Document

Related Comment	Relationship
Public Comment No. 1435-NFPA 70-2024 [Section No. 722.100(A)(7)]	PC to relocate the deleted requirements from 722.100(7) to section 722.180.
Public Comment No. 1435-NFPA 70-2024 [Section No. 722.100(A)(7)]	

Related Item

- FCR-238

Submitter Information Verification

Submitter Full Name: Kyle Krueger
Organization: NECA
Affiliation: NECA
Street Address:
City:

State:
Zip:
Submittal Date: Thu Aug 22 16:30:10 EDT 2024
Committee: NEC-P03

Limited Energy Task Group [2nd Draft]					
No.	First Name	Last Name	Class.	Organization	Other Committees
1	Kyle	Krueger	[I/M]	NECA	NEC-Correlating Comittee CMP 3 NFPA 72-Correlating Committee
2	Ernie	Gallo	[U/T]	NEBScore	
3	Derrick	Atkins	[L]	Minneapolis Electrical JA	NEC-Correlating Committee CMP 5
4	Anthony	Tassone	[R/T]	UL Solutions	CMP 3 CMP 16
5	Chad	Jones	[M]	Cisco	CMP 3
6	Sam	Rokowski	[I/M]	Maddox Inc.	CMP 3
7	George	Bish	[M]	Amazon/Ring Protect Inc	CMP 16
8	Trevor	Bowmer	[U]	Telecom Consulting	NEC Correlating Committee CMP 16
9	Ronald	Tellas	[M]	CCCA	CMP 3 CMP 16
10	Tim	Mikloiche	[E]	IAEI	CMP 3
11	Ryan	Jackosn	[M]	Steel Tube Industry	CMP 3
12	Diana	Lettkeman	[M]	Dish	CMP 16
13	John	Kacperski	[L]	IBEW	CMP 16

Public Comment No. 1312-NFPA 70-2024 [New Section after 722.182]

Part I. General

723.1 Scope.

This article covers the application and installation of raceways, cable routing assemblies and cable trays for limited-energy systems.

723.2 Listing.

Raceways, cables routing assemblies and nonmetallic cable trays for limited-energy systems shall be listed in accordance with 723.2(A) and 723.2(B).

(A) General.

Raceways, cable routing assemblies and cable trays installed within buildings for limited-energy systems shall be:

(1) Listed as resistant to the spread of fire

(2) Suitable for its application as specified in Article 723, Part II-IV.

(B) Wet Locations.

Raceways, cable routing assemblies, and nonmetallic cable trays for limited-energy systems installed in wet locations shall be listed for wet locations.

723.4 Other Articles.

Limited-energy cables installed in raceways, cable routing assemblies or cable trays shall comply with the application and installation requirements of Parts III-IX of Article 722

722.14 Separation of Limited-Energy Circuits from Electric Light, Power, Class 1, Non-Power-Limited Fire Alarm, and Medium-Power Network-Powered Broadband Communications Circuits in Raceways, Compartments, and Boxes.

Separation shall be provided in accordance with 722.14(A) through722.14(K) for limited energy cables and conductors, except as provided in 722.164 for optical fiber cables.

(A) General.

Limited energy cables shall be separated by at least 50 mm (2 in.) from conductors of any electric light, power, Class 1, non-power-limited fire alarm, or medium-power network-powered broadband communications circuits and shall not be placed the same raceway, compartment, enclosure, manhole, outlet box, device box, or similar, unless permitted by the following.

Exception: Low-Power network-powered broadband communications circuit cables shall be permitted in the same raceway, cable tray, box, enclosure, or cable routing assembly as and medium-power network-powered broadband communications circuit cables.

(B) Separated by Barriers.

Limited energy cables shall be permitted to be placed in any raceway, compartment, outlet box, junction box, or other enclosures with conductors of electric light, power, Class 1, non-power-limited fire alarm, or medium-power network-powered broadband communications circuits if the conductors of electric light, power, Class 1, non-power-limited fire alarm, and medium-power network-powered broadband communications circuits are separated from the limited energy and cables by a permanent barrier that maintains the 50 mm (2 in.) separation or a listed divider.

(C) Raceways Within Enclosures.

Limited energy cables shall be permitted to share the same enclosure with other systems if the limited energy cables are separated by a raceway within the enclosure.

(D) Associated Systems Within Enclosures.

Limited energy cables shall be permitted to be placed in outlet boxes, junction boxes, compartments, or similar with power conductors where such conductors are introduced solely for power supply to the limited energy equipment and 722.15(D)(a) or 722.15(D)(b) applies.

(1) The power circuit conductors are be routed within the enclosure to maintain a minimum 6 mm (0.25 in.) separation from the limited energy cables.

(1) The circuit conductors operate at 150 volts or less to ground and the limited energy circuit conductors are either:

(2)

i. Installed as a Class 1 circuit.

ii. The limited energy cable is CL3, CL3R, CL3P, or a permitted substitute and the conductors that emerge from the cable jacket are separated by a minimum 6 mm (0.25 in.) or by a nonconductive barrier from all other conductors.

(E) Enclosures with Single Opening.

C ircuit conductors of limited energy cables entering compartments, enclosures, device boxes, outlet boxes, or similar shall be permitted to be installed with Class 1, non-power-limited fire alarm, and medium-power network-powered broadband communications circuits where they are introduced solely to connect the equipment connected to the limited energy circuits. If the limited energy circuit conductors must enter an enclosure that is provided with a single opening, they shall be permitted to enter through a single fitting (such as a tee) if the conductors are separated from the conductors of the other circuits by a continuous and firmly fixed nonconductor, such as flexible tubing.

(F) Elevators.

(1) Traveling Cables. Separation of circuits shall not be required in elevator traveling cables constructed in accordance with 620.36.

(2) Hoistways. In hoistways, cables shall be installed in rigid metal conduit, rigid nonmetallic conduit, intermediate metal conduit, liquidtight flexible nonmetallic conduit, or electrical metallic tubing. For elevators or similar equipment, these conductors shall be permitted to be installed as provided in 620.21.

(G) In Raceways or Cables.

Separation shall not be required for either of the following conditions:

(1)

(a)

i. The conductors of electric light, power, Class 1, non-power-limited fire alarm, and medium-power network-powered broadband communications circuits are in a raceway or in metal-sheathed, metal-clad, nonmetallic-sheathed, Type AC or Type UF cables.

(1)

(a)

i. The limited energy cable conductors are installed in a raceway or in metal-sheathed, metal-clad, nonmetallic-sheathed, Type TC, or Type UF cables.

(H) Protected by Firmly Fixed Nonconductors.

Separation shall not be required if the limited energy cables are permanently separated from the conductors of electric light, power, Class 1, non-power-limited fire alarm, and medium-power network-powered broadband communications circuits by a continuous and firmly fixed nonconductor, such as porcelain tubes or flexible tubing, in addition to the insulation on the wire.

(I) Manholes.

Underground limited energy circuit conductors and cables in a manhole shall be permitted to be installed with Class 1, non-power-limited fire alarm, and medium-power network-powered broadband communications circuits if one of the following conditions is met:

(1)

(a) The electric light, power, Class 1, non-power-limited fire alarm, and medium-power network-powered broadband communications circuit conductors are in a metal-enclosed cable or Type UF cable.

(1)

(a) The limited energy circuit conductors are permanently and effectively separated from the conductors of other circuits by a continuous and firmly fixed nonconductor, such as flexible tubing, in addition to the insulation or covering on the wire.

(1)

(a) The limited energy circuit conductors are permanently and effectively separated from conductors of the other circuits and securely fastened to racks, insulators, or other approved supports.

(J) Cable Trays.

Limited energy circuit conductors shall be permitted to be installed in cable trays if the conductors of the electric light, Class 1, and non-power-limited fire alarm circuits are separated by a solid fixed barrier of a material compatible with the cable tray or if the limited energy circuits are installed in Type MC cable.

(K) If Protected.

Limited energy circuits shall be permitted to be installed together with the conductors of electric light, power, Class 1, non-power-limited fire alarm, and medium-power network-powered broadband communications circuits if they are functionally associated and installed using Class 1 wiring methods in accordance with 724.48.

Part II. Application and Installation of Raceways for Limited-Energy Systems.

723.20 Application of Limited-Energy Raceways in Buildings.

Permitted and nonpermitted applications of limited-energy raceways shall be in accordance with Table 723.20.

Table 723.20 Applications of Limited-Energy Raceways in Buildings.

Applications		Listed Communications Raceway Type		
		Plenum	Riser	General-Purpose
In ducts specifically fabricated for environmental air as described in 720.22(B)	In fabricated ducts	N	N	N
	In metal raceway that complies with 700.22(B)	N	N	N
In other spaces used for environmental air (plenums) as described in 720.22(C)	In other spaces used for environmental air	Y	N	N
	In metal raceway that complies with 700.22(C)	Y	Y	Y
	In plenum cable routing assemblies	N	N	N
	Supported by open metal cable trays	Y	N	N
	Supported by solid bottom metal cable trays with solid metal covers	Y	Y	Y
In risers	In vertical runs	Y	Y	N
	In metal raceways	Y	Y	Y
	In fireproof shafts	Y	Y	Y
	In plenum cable routing assemblies	N	N	N
	In riser cable routing assemblies	N	N	N
	In one- and two-family dwellings	Y	Y	Y
Within buildings in other than air-handling spaces and risers	General	Y	Y	Y
	In one- and two-family dwellings	Y	Y	Y
	In multifamily dwellings	Y	Y	Y
	In nonconcealed spaces	Y	Y	Y
	Supported by cable trays	Y	Y	Y

Applications		Listed Communications Raceway Type		
		Plenum	Riser	General-Purpose
	Under carpet, modular flooring, and planks	N	N	N
	In distributing frames and cross-connect arrays	Y	Y	Y
	In any raceway recognized in Chapter 3	Y	Y	Y
	In plenum cable routing assemblies	N	N	N
	In riser cable routing assemblies	N	N	N
	In general-purpose cable routing assemblies	N	N	N

Note: An "N" in the table indicates that the communications raceway type shall not be installed in the application. A "Y" indicates that the communications raceway type shall be permitted to be installed in the application, subject to the limitations described in 723.22 and 722.131.

723.22 Installation of Raceways for Limited-Energy Systems.

(A) Types of Raceways.

Limited-energy wires and cables shall be permitted to be installed in raceways that comply with 723.22(1), 723.22(2), or 723.22(3). Medium-power network-powered broadband communications cables shall not be installed in raceways that comply with 723.22(2).

(1) Permitted Raceways.

Limited-energy wires and cables shall be permitted to be in any raceway included in Chapter 3. The raceways shall be installed in accordance the applicable raceway article.

(1) Communications Raceways.

Limited-energy wires and cables shall be permitted to be installed in plenum communications raceways, riser communications raceways, and general-purpose communications raceways selected in accordance with Table 723.20, listed in accordance with 723.2, and installed in accordance with 722.131 and 362.24 through 362.56, where the requirements applicable to electrical nonmetallic tubing (ENT) apply.

(1) Innerduct for Communications Wires and Cables, Coaxial Cables, or Network-Powered Broadband Communications Cables.

Plenum communications raceways, riser communications raceways, and general-purpose communications raceways selected in accordance with Table 723.20 shall be permitted to be installed as innerduct in any type of listed raceway permitted in Chapter 3.

(B) Raceway Fill.

The raceway fill requirements of 720.6(B)(1) shall apply to medium-power network-powered broadband communications cables.

(C) Permitted Substitutions.

Substitutions of communications raceways shall be permitted in accordance with Table 723.22(C).

Table 723.22(C) Permitted Substitutions of Communications Raceways.

R aceway Type	Permitted Substitution
Riser Communications Raceway	Plenum Communications Raceway
General Purpose Communications Raceway	Plenum Communications Raceway, Riser Communications Raceway.

Part III. Application and Installation of Cable Routing Assemblies for Limited-Energy Systems.

723.30 Application of Cable Routing Assemblies.

Permitted and nonpermitted applications of cable routing assemblies shall be in accordance with Table 723.30.

Table 723.30 Applications of Cable Routing Assemblies in Buildings

Applications		Listed Cable Routing Assembly Type		
		Plenum	Riser	General-Purpose
In ducts specifically fabricated for environmental air as described in 720.22(B)	In fabricated ducts	N	N	N
	In metal raceway that complies with 700.22(B)	N	N	N
In other spaces used for environmental air (plenums) as described in 720.22(C)	In other spaces used for environmental air	Y	N	N
	In metal raceway that complies with 700.22(C)	N	N	N
	In plenum communications raceways	N	N	N
	Supported by open metal cable trays	Y	N	N
	Supported by solid bottom metal cable trays with solid metal covers	N	N	N
In risers	In vertical runs	Y	Y	N
	In metal raceways	N	N	N

Applications		Listed Cable Routing Assembly Type		
		Plenum	Riser	General-Purpose
	In fireproof shafts	Y	Y	Y
	In plenum communications raceways	N	N	N
	In riser communications raceways	N	N	N
	In one- and two-family dwellings	Y	Y	Y
Within buildings in other than air-handling spaces and risers	General	Y	Y	Y
	In one- and two-family dwellings	Y	Y	Y
	In multifamily dwellings	Y	Y	Y
	In nonconcealed spaces	Y	Y	Y
	Supported by cable trays	Y	Y	Y
	Under carpet, modular flooring, and planks	N	N	N
	In distributing frames and cross-connect arrays	Y	Y	Y
	In any raceway recognized in Chapter 3	N	N	N
	In plenum communications raceways	N	N	N
	In riser communications raceways	N	N	N
	In general-purpose communications raceways	N	N	N

Note: An "N" in the table indicates that the cable routing assembly type shall not be installed in the application. A "Y" indicates that the cable routing assembly type shall be permitted to be installed in the application subject to the limitations described in 722.131.

723.32 Installation of Cable Routing Assemblies.

(A) Cable Routing Assemblies.

Limited-energy cables shall be permitted to be installed in plenum cable routing assemblies, riser cable routing assemblies, and general-purpose cable routing assemblies selected in accordance with Table 723.30 and installed in accordance with 723.32(1), 723.32(2), and 723.32(3).

(1) Horizontal Support.

Cable routing assemblies shall be supported where run horizontally at intervals not to exceed 900 mm (3 ft) and at each end or joint, unless listed for other support intervals. In no case shall the distance between supports exceed 3 m (10 ft).

(1) Vertical Support.

Vertical runs of cable routing assemblies shall be supported at intervals not exceeding 1.2 m (4 ft), unless listed for other support intervals, and shall not have more than one joint between supports.

(1) Permitted Substitutions.

Substitutions of listed cable routing assemblies shall be permitted in accordance with Table 723.32(A)(3).

Table 723.32(A)(3) Permitted Substitutions of Cable Routing Assemblies.

R aceway Type	Permitted Substitution
Riser C able Routing Assembly	Plenum Cable Routing Assembly
General Purpose Cable Routing Assembly	Plenum Cable Routing Assembly, Riser Cable Routing Assembly

Part IV. Cable Trays for Limited-Energy Systems.

723.40 Cable Trays.

(A) General.

Limited-energy cables and communications raceways shall be permitted to be installed in metal or listed nonmetallic cable tray systems.

(B) Ladder Cable Trays.

Ladder cable trays shall be permitted to support cable routing assemblies.

Additional Proposed Changes

File Name	Description	Approved
_NEW_Article_723_Public_Comment_-Final.docx	Word Doc for NEW Article 723 Limited-Energy Raceways, Cable Routing Assemblies, and Cable Trays	
Limited_Energy_Roster-2026_2nd_Draft.pdf	Limited-Energy Task Group Roster-2nd Draft	

Statement of Problem and Substantiation for Public Comment

This public comment is submitted on behalf of the Limited-Energy Task Group (see attached task group roster) to create a new Article 723 to house the requirements of Raceways, Cable Routing Assemblies, and Cable Trays for Limited-Energy Installations, as these currently reside in Article 722 for Limited-Energy

Cables. A new Article for just these wiring methods is more appropriate for usability as the scope of Article 722 is specific to Limited-Energy Cables. See companion PC-1307, 1308, 1309, & 1310.

Related Public Comments for This Document

Related Comment	Relationship
Public Comment No. 1307-NFPA 70-2024 [Section No. 722.110]	Deletion of Section 722.110
Public Comment No. 1308-NFPA 70-2024 [Section No. 722.111]	Deletion of Section 722.111
Public Comment No. 1309-NFPA 70-2024 [Section No. 722.112]	Deletion of Section 722.112
Public Comment No. 1310-NFPA 70-2024 [Section No. 722.113]	Deletion of Section 722.113
Public Comment No. 1306-NFPA 70-2024 [Section No. 720.4(A)]	
Public Comment No. 1307-NFPA 70-2024 [Section No. 722.110]	
Public Comment No. 1308-NFPA 70-2024 [Section No. 722.111]	
Public Comment No. 1310-NFPA 70-2024 [Section No. 722.113]	
Public Comment No. 1367-NFPA 70-2024 [Section No. 722.130]	
Public Comment No. 1368-NFPA 70-2024 [Section No. 722.130]	
Public Comment No. 1369-NFPA 70-2024 [Section No. 722.131(A)]	
Public Comment No. 1376-NFPA 70-2024 [Section No. 722.162(A)(1)]	
Public Comment No. 1377-NFPA 70-2024 [Section No. 722.162(C)]	
Public Comment No. 1378-NFPA 70-2024 [Section No. 722.161]	
Public Comment No. 1379-NFPA 70-2024 [Section No. 722.163]	
Public Comment No. 1536-NFPA 70-2024 [Section No. 725.139]	

Related Item

- FCR-238

Submitter Information Verification

Submitter Full Name: Kyle Krueger
Organization: NECA
Affiliation: NECA
Street Address:
City:
State:
Zip:

Submittal Date: Tue Aug 20 13:38:18 EDT 2024
Committee: NEC-P03

Limited Energy Task Group [2nd Draft]					
No.	First Name	Last Name	Class.	Organization	Other Committees
1	Kyle	Krueger	[I/M]	NECA	NEC-Correlating Comittee CMP 3 NFPA 72-Correlating Committee
2	Ernie	Gallo	[U/T]	NEBScore	
3	Derrick	Atkins	[L]	Minneapolis Electrical JA	NEC-Correlating Committee CMP 5
4	Anthony	Tassone	[R/T]	UL Solutions	CMP 3 CMP 16
5	Chad	Jones	[M]	Cisco	CMP 3
6	Sam	Rokowski	[I/M]	Maddox Inc.	CMP 3
7	George	Bish	[M]	Amazon/Ring Protect Inc	CMP 16
8	Trevor	Bowmer	[U]	Telecom Consulting	NEC Correlating Committee CMP 16
9	Ronald	Tellas	[M]	CCCA	CMP 3 CMP 16
10	Tim	Mikloiche	[E]	IAEI	CMP 3
11	Ryan	Jackosn	[M]	Steel Tube Industry	CMP 3
12	Diana	Lettkeman	[M]	Dish	CMP 16
13	John	Kacperski	[L]	IBEW	CMP 16

Article 723 – Raceways, Cable Routing Assemblies, and Cable Trays for Limited-Energy Systems.

Part I. General

723.1 Scope.

This article covers the application and installation of raceways, cable routing assemblies and cable trays for limited-energy systems.

723.2 Listing.

Raceways, cables routing assemblies and nonmetallic cable trays for limited-energy systems shall be listed in accordance with 723.2(A) and 723.2(B).

(A) General.

Raceways, cable routing assemblies and cable trays installed within buildings for limited-energy systems shall be:

(1) Listed as resistant to the spread of fire
(2) Suitable for its application as specified in Article 723, Part II-IV.

(B) Wet Locations.

Raceways, cable routing assemblies, and nonmetallic cable trays for limited-energy systems installed in wet locations shall be listed for wet locations.

723.4 Other Articles.

Limited-energy cables installed in raceways, cable routing assemblies or cable trays shall comply with the application and installation requirements of Parts III-IX of Article 722

722.14 Separation of **Limited-Energy Circuits from Electric Light, Power, Class 1, Non-Power-Limited Fire Alarm, and Medium-Power Network-Powered Broadband Communications Circuits in Raceways, Compartments, and Boxes.**

Separation shall be provided in accordance with 722.14(A) through722.14(K) for limited energy cables and conductors, except as provided in 722.164 for optical fiber cables.

(A) General.

Limited energy cables shall be separated by at least 50 mm (2 in.) from conductors of any electric light, power, Class 1, non-power-limited fire alarm, or medium-power network-powered broadband communications circuits and shall not be placed the same raceway, compartment, enclosure, manhole, outlet box, device box, or similar, unless permitted by the following.

Exception: Low-Power network-powered broadband communications circuit cables shall be permitted in the same raceway, cable tray, box, enclosure, or cable routing assembly as and medium-power network-powered broadband communications circuit cables.

(A) Separated by Barriers.

Article 723 – Raceways, Cable Routing Assemblies, and Cable Trays for Limited-Energy Systems.

Limited energy cables shall be permitted to be placed in any raceway, compartment, outlet box, junction box, or other enclosures with conductors of electric light, power, Class 1, non-power-limited fire alarm, or medium-power network-powered broadband communications circuits if the conductors of electric light, power, Class 1, non-power-limited fire alarm, and medium-power network-powered broadband communications circuits are separated from the limited energy and cables by a permanent barrier that maintains the 50 mm (2 in.) separation or a listed divider.

(B) Raceways Within Enclosures.

Limited energy cables shall be permitted to share the same enclosure with other systems if the limited energy cables are separated by a raceway within the enclosure.

(C) Associated Systems Within Enclosures.

Limited energy cables shall be permitted to be placed in outlet boxes, junction boxes, compartments, or similar with power conductors where such conductors are introduced solely for power supply to the limited energy equipment and 722.15(D)(a) or 722.15(D)(b) applies.

a) The power circuit conductors are be routed within the enclosure to maintain a minimum 6 mm (0.25 in.) separation from the limited energy cables.

b) The circuit conductors operate at 150 volts or less to ground and the limited energy circuit conductors are either:
   1. Installed as a Class 1 circuit.
   2. The limited energy cable is CL3, CL3R, CL3P, or a permitted substitute and the conductors that emerge from the cable jacket are separated by a minimum 6 mm (0.25 in.) or by a nonconductive barrier from all other conductors.

(D) Enclosures with Single Opening.

Circuit conductors of limited energy cables entering compartments, enclosures, device boxes, outlet boxes, or similar shall be permitted to be installed with Class 1, non-power-limited fire alarm, and medium-power network-powered broadband communications circuits where they are introduced solely to connect the equipment connected to the limited energy circuits. If the limited energy circuit conductors must enter an enclosure that is provided with a single opening, they shall be permitted to enter through a single fitting (such as a tee) if the conductors are separated from the conductors of the other circuits by a continuous and firmly fixed nonconductor, such as flexible tubing.

(E) Elevators.

(a) Traveling Cables. Separation of circuits shall not be required in elevator traveling cables constructed in accordance with 620.36.

(b) Hoistways. In hoistways, cables shall be installed in rigid metal conduit, rigid nonmetallic conduit, intermediate metal conduit, liquidtight flexible nonmetallic conduit, or electrical metallic tubing. For elevators or similar equipment, these conductors shall be permitted to be installed as provided in 620.21.

(F) In Raceways or Cables.

Separation shall not be required for either of the following conditions:

(1) The conductors of electric light, power, Class 1, non-power-limited fire alarm, and medium-power network-powered broadband communications circuits are in a raceway or in metal-sheathed, metal-clad, nonmetallic-sheathed, Type AC or Type UF cables.

(2) The limited energy cable conductors are installed in a raceway or in metal-sheathed, metal-clad, nonmetallic-sheathed, Type TC, or Type UF cables.

(G) Protected by Firmly Fixed Nonconductors.
Separation shall not be required if the limited energy cables are permanently separated from the conductors of electric light, power, Class 1, non-power-limited fire alarm, and medium-power network-powered broadband communications circuits by a continuous and firmly fixed nonconductor, such as porcelain tubes or flexible tubing, in addition to the insulation on the wire.

(H) Manholes.
Underground limited energy circuit conductors and cables in a manhole shall be permitted to be installed with Class 1, non-power-limited fire alarm, and medium-power network-powered broadband communications circuits if one of the following conditions is met:

(1) The electric light, power, Class 1, non-power-limited fire alarm, and medium-power network-powered broadband communications circuit conductors are in a metal-enclosed cable or Type UF cable.

(2) The limited energy circuit conductors are permanently and effectively separated from the conductors of other circuits by a continuous and firmly fixed nonconductor, such as flexible tubing, in addition to the insulation or covering on the wire.

(3) The limited energy circuit conductors are permanently and effectively separated from conductors of the other circuits and securely fastened to racks, insulators, or other approved supports.

(I) Cable Trays.
Limited energy circuit conductors shall be permitted to be installed in cable trays if the conductors of the electric light, Class 1, and non-power-limited fire alarm circuits are separated by a solid fixed barrier of a material compatible with the cable tray or if the limited energy circuits are installed in Type MC cable.

(J) If Protected.
Limited energy circuits shall be permitted to be installed together with the conductors of electric light, power, Class 1, non-power-limited fire alarm, and medium-power network-powered broadband communications circuits if they are functionally associated and installed using Class 1 wiring methods in accordance with 724.48.

Part II. Application and Installation of Raceways for Limited-Energy Systems.

723.20 Application of Limited-Energy Raceways in Buildings.

Permitted and nonpermitted applications of limited-energy raceways shall be in accordance with Table 723.20.

Table 723.20 Applications of Limited-Energy Raceways in Buildings.

Article 723 – Raceways, Cable Routing Assemblies, and Cable Trays for Limited-Energy Systems.

Applications		Listed Communications Raceway Type		
		Plenum	Riser	General-Purpose
In ducts specifically fabricated for environmental air as described in 720.22(B)	In fabricated ducts	N	N	N
	In metal raceway that complies with 700.22(B)	N	N	N
In other spaces used for environmental air (plenums) as described in 720.22(C)	In other spaces used for environmental air	Y	N	N
	In metal raceway that complies with 700.22(C)	Y	Y	Y
	In plenum cable routing assemblies	N	N	N
	Supported by open metal cable trays	Y	N	N
	Supported by solid bottom metal cable trays with solid metal covers	Y	Y	Y
In risers	In vertical runs	Y	Y	N
	In metal raceways	Y	Y	Y
	In fireproof shafts	Y	Y	Y
	In plenum cable routing assemblies	N	N	N
	In riser cable routing assemblies	N	N	N
	In one- and two-family dwellings	Y	Y	Y
Within buildings in other than air-handling spaces and risers	General	Y	Y	Y
	In one- and two-family dwellings	Y	Y	Y
	In multifamily dwellings	Y	Y	Y
	In nonconcealed spaces	Y	Y	Y
	Supported by cable trays	Y	Y	Y
	Under carpet, modular flooring, and planks	N	N	N
	In distributing frames and cross-connect arrays	Y	Y	Y
	In any raceway recognized in Chapter 3	Y	Y	Y
	In plenum cable routing assemblies	N	N	N
	In riser cable routing assemblies	N	N	N
	In general-purpose cable routing assemblies	N	N	N

Note: An “N” in the table indicates that the communications raceway type shall not be installed in the application. A “Y” indicates that the communications raceway type shall be permitted to be installed in the application, subject to the limitations described in 723.22 and 722.131.

723.22 Installation of Raceways for Limited-Energy Systems.

Article 723 – Raceways, Cable Routing Assemblies, and Cable Trays for Limited-Energy Systems.

(A) Types of Raceways.
Limited-energy wires and cables shall be permitted to be installed in raceways that comply with 723.22(1), 723.22(2), or 723.22(3). Medium-power network-powered broadband communications cables shall not be installed in raceways that comply with 723.22(2).

(1) Permitted Raceways.
Limited-energy wires and cables shall be permitted to be in any raceway included in Chapter 3. The raceways shall be installed in accordance the applicable raceway article.

(2) Communications Raceways.
Limited-energy wires and cables shall be permitted to be installed in plenum communications raceways, riser communications raceways, and general-purpose communications raceways selected in accordance with Table 723.20, listed in accordance with 723.2, and installed in accordance with 722.131 and 362.24 through 362.56, where the requirements applicable to electrical nonmetallic tubing (ENT) apply.

(3) Innerduct for Communications Wires and Cables, Coaxial Cables, or Network-Powered Broadband Communications Cables.
Plenum communications raceways, riser communications raceways, and general-purpose communications raceways selected in accordance with Table 723.20 shall be permitted to be installed as innerduct in any type of listed raceway permitted in Chapter 3.

(B) Raceway Fill.
The raceway fill requirements of 720.6(B)(1) shall apply to medium-power network-powered broadband communications cables.

(C) Permitted Substitutions.
Substitutions of communications raceways shall be permitted in accordance with Table 723.22(C).

Table 723.22(C) Permitted Substitutions of Communications Raceways.

Raceway Type	Permitted Substitution
Riser Communications Raceway	Plenum Communications Raceway
General Purpose Communications Raceway	Plenum Communications Raceway, Riser Communications Raceway.

Part III. Application and Installation of Cable Routing Assemblies for Limited-Energy Systems.

723.30 Application of Cable Routing Assemblies.
Permitted and nonpermitted applications of cable routing assemblies shall be in accordance with Table 723.30.

Table 723.30 Applications of Cable Routing Assemblies in Buildings

Article 723 – Raceways, Cable Routing Assemblies, and Cable Trays for Limited-Energy Systems.

Applications		Listed Cable Routing Assembly Type		
		Plenum	Riser	General-Purpose
In ducts specifically fabricated for environmental air as described in 720.22(B)	In fabricated ducts	N	N	N
	In metal raceway that complies with 700.22(B)	N	N	N
In other spaces used for environmental air (plenums) as described in 720.22(C)	In other spaces used for environmental air	Y	N	N
	In metal raceway that complies with 700.22(C)	N	N	N
	In plenum communications raceways	N	N	N
	Supported by open metal cable trays	Y	N	N
	Supported by solid bottom metal cable trays with solid metal covers	N	N	N
In risers	In vertical runs	Y	Y	N
	In metal raceways	N	N	N
	In fireproof shafts	Y	Y	Y
	In plenum communications raceways	N	N	N
	In riser communications raceways	N	N	N
	In one- and two-family dwellings	Y	Y	Y
Within buildings in other than air-handling spaces and risers	General	Y	Y	Y
	In one- and two-family dwellings	Y	Y	Y
	In multifamily dwellings	Y	Y	Y
	In nonconcealed spaces	Y	Y	Y
	Supported by cable trays	Y	Y	Y
	Under carpet, modular flooring, and planks	N	N	N
	In distributing frames and cross-connect arrays	Y	Y	Y
	In any raceway recognized in Chapter 3	N	N	N
	In plenum communications raceways	N	N	N

Applications		Listed Cable Routing Assembly Type		
		Plenum	Riser	General-Purpose
	In riser communications raceways	N	N	N
	In general-purpose communications raceways	N	N	N

Note: An "N" in the table indicates that the cable routing assembly type shall not be installed in the application. A "Y" indicates that the cable routing assembly type shall be permitted to be installed in the application subject to the limitations described in 722.131.

723.32 Installation of Cable Routing Assemblies.

(A) Cable Routing Assemblies.
Limited-energy cables shall be permitted to be installed in plenum cable routing assemblies, riser cable routing assemblies, and general-purpose cable routing assemblies selected in accordance with Table 723.30 and installed in accordance with 723.32(1), 723.32(2), and 723.32(3).

(1) Horizontal Support.
Cable routing assemblies shall be supported where run horizontally at intervals not to exceed 900 mm (3 ft) and at each end or joint, unless listed for other support intervals. In no case shall the distance between supports exceed 3 m (10 ft).

(2) Vertical Support.
Vertical runs of cable routing assemblies shall be supported at intervals not exceeding 1.2 m (4 ft), unless listed for other support intervals, and shall not have more than one joint between supports.

(3) Permitted Substitutions.
Substitutions of listed cable routing assemblies shall be permitted in accordance with Table 723.32(A)(3).

Table 723.32(A)(3) Permitted Substitutions of Cable Routing Assemblies.

Raceway Type	Permitted Substitution
Riser Cable Routing Assembly	Plenum Cable Routing Assembly
General Purpose Cable Routing Assembly	Plenum Cable Routing Assembly, Riser Cable Routing Assembly

Part IV. Cable Trays for Limited-Energy Systems.

723.40 Cable Trays.

(A) General.
Limited-energy cables and communications raceways shall be permitted to be installed in metal or listed nonmetallic cable tray systems.

(B) Ladder Cable Trays.

Article 723 – Raceways, Cable Routing Assemblies, and Cable Trays for Limited-Energy Systems.

Ladder cable trays shall be permitted to support cable routing assemblies.

Public Comment No. 940-NFPA 70-2024 [Section No. 724.1]

724.1 Scope.

This article covers Class 1 circuits, including power-limited Class 1 remote-control and signaling circuits, that are not an integral part of a device or utilization equipment.

Informational Note: See ~~300~~ 206 . ~~28 for~~ 4 for classifications of remote-control and signaling circuits.

Additional Proposed Changes

File Name	Description	Approved
Limited_Energy_Roster-2026_2nd_Draft.pdf	Limited-Energy Task Group Roster-2nd Draft	

Statement of Problem and Substantiation for Public Comment

This public comment is submitted on behalf of the Limited-Energy Task Group (see attached roster) to update the reference in the Informational Note to 724.1. This reference may need to be updated based on the action of the NEC-AAC Task Group responsible to determine the location of these requirements.

Related Item

- CCN-264

Submitter Information Verification

Submitter Full Name: Kyle Krueger
Organization: NECA
Affiliation: NECA
Street Address:
City:
State:
Zip:

Submittal Date: Wed Aug 07 17:36:58 EDT 2024
Committee: NEC-P03

Limited Energy Task Group [2nd Draft]					
No.	First Name	Last Name	Class.	Organization	Other Committees
1	Kyle	Krueger	[I/M]	NECA	NEC-Correlating Comittee CMP 3 NFPA 72-Correlating Committee
2	Ernie	Gallo	[U/T]	NEBScore	
3	Derrick	Atkins	[L]	Minneapolis Electrical JA	NEC-Correlating Committee CMP 5
4	Anthony	Tassone	[R/T]	UL Solutions	CMP 3 CMP 16
5	Chad	Jones	[M]	Cisco	CMP 3
6	Sam	Rokowski	[I/M]	Maddox Inc.	CMP 3
7	George	Bish	[M]	Amazon/Ring Protect Inc	CMP 16
8	Trevor	Bowmer	[U]	Telecom Consulting	NEC Correlating Committee CMP 16
9	Ronald	Tellas	[M]	CCCA	CMP 3 CMP 16
10	Tim	Mikloiche	[E]	IAEI	CMP 3
11	Ryan	Jackosn	[M]	Steel Tube Industry	CMP 3
12	Diana	Lettkeman	[M]	Dish	CMP 16
13	John	Kacperski	[L]	IBEW	CMP 16

Public Comment No. 919-NFPA 70-2024 [New Section after 724.45]

TITLE OF NEW CONTENT

Type your content here ...

724.46 Class 1 Circuit Wiring Methods.

Class 1 circuits shall be installed in accordance with 300.4 through 300.28.

Exception No. 1: The requirements of 724.48 through 724.51 shall be permitted to apply in installations of Class 1 circuits.

Exception No. 2: Methods permitted or required by other articles of this Code shall apply to installations of Class 1 circuits.

Additional Proposed Changes

File Name	Description	Approved
411_fire3.jpg	power supply	
411_fire4.jpg		
411_fire1.jpg		
411_fire2.jpg		

Statement of Problem and Substantiation for Public Comment

The correlating committee removed this material from the First Draft, creating a massive safety concern. A Class 1 circuit IS NOT A LIMITED ENERGY CIRCUIT and IS NOT SAFE from a fire initiation perspective. A 30V, 1,000VA transformer has a current of over 30A, which is plenty of I sqaured R power to light a building on fire. Code-Making Panel 3 deliberatley removed Class 1 circuits from the other "safe" circuits in Chapter 7 for this reason. It is not intended to be regulated by Article 720, and it MUST NOT be regulated by Article 720.
Please enjoy the attached photographs of a fire that I myself investigated from a transformer that complies with the power limitations of a Class 1 circuit.
If this continues to pass, we are going to kill somebody.

Related Item

- FCR 222

Submitter Information Verification

Submitter Full Name: Ryan Jackson
Organization: Self-employed
Street Address:
City:
State:
Zip:

Submittal Date: Wed Aug 07 15:31:13 EDT 2024
Committee: NEC-P03

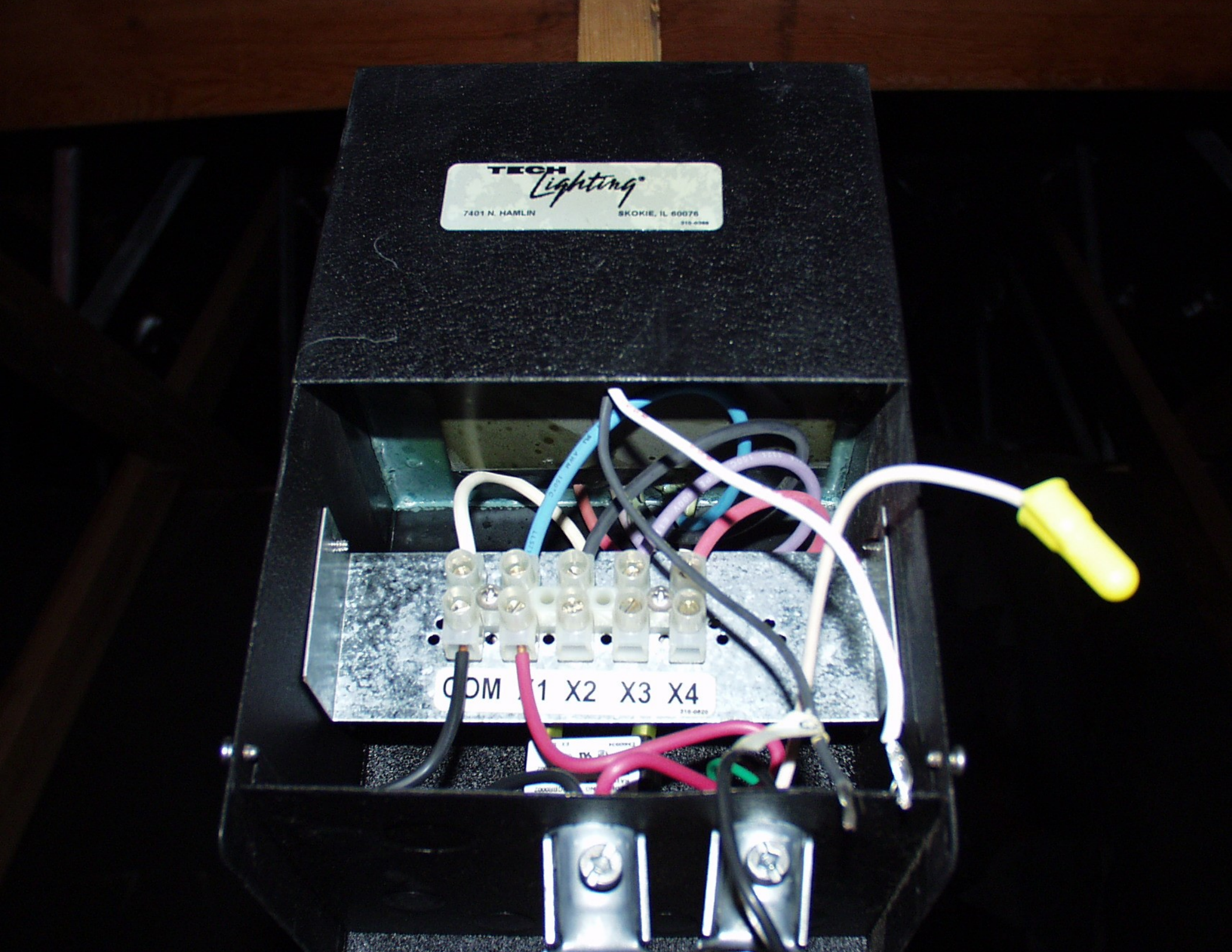
TECH
Lighting
7401 N. HAMLIN
SKOKIE, IL 60076
COM X1 X2 X3 X4

Public Comment No. 1426-NFPA 70-2024 [Section No. 724.45]

724.45 Class 1 Circuit Overcurrent Device Location.

Overcurrent devices shall be located as specified in 724.45(A) through 724.45(E).

(A) Point of Supply.

Overcurrent devices shall be located at the point where the conductor to be protected receives its supply.

~~**(B)**~~

(B) ~~Feeder Taps.~~

~~Class 1 circuit conductors shall be permitted to be tapped, without overcurrent protection at the tap, where the overcurrent device protecting the circuit conductor is sized to protect the tap conductor.~~

~~**(C)** Branch-Circuit Taps.~~

~~Class 1 circuit conductors 14 AWG and larger that are tapped from the load side of the overcurrent protective device(s) of a controlled light and power circuit shall require only short-circuit and ground-fault protection and shall be permitted to be protected by the branch-circuit overcurrent protective device(s) where the rating of the protective device(s) is not more than 300 percent of the ampacity of the Class 1 circuit conductor.~~

Primary Side of Transformer.

Class 1 circuit conductors supplied by the secondary of a single-phase transformer having only a 2-wire (single-voltage) secondary shall be permitted to be protected by overcurrent protection provided on the primary side of the transformer if the protection is in accordance with 450.5 and does not exceed the value determined by multiplying the secondary conductor ampacity by the secondary-to-primary transformer voltage ratio. Transformer secondary conductors other than 2-wire shall not be considered to be protected by the primary overcurrent protection.

(~~E~~ C) Input Side of Electronic Power Source.

Class 1 circuit conductors supplied by the output of a single-phase, listed electronic power source other than a transformer having only a 2-wire (single-voltage) output for connection to Class 1 circuits shall be permitted to be protected by overcurrent protection provided on the input side of the electronic power source if the protection does not exceed the value determined by multiplying the Class 1 circuit conductor ampacity by the output-to-input voltage ratio. Electronic power source outputs other than 2-wire (single voltage) shall not be considered to be protected by the primary overcurrent protection.

Statement of Problem and Substantiation for Public Comment

These allowances made sense when Class 1 nonpower-limited circuits were covered by this article (more accurately, when they were covered in 725). Now that these circuits are limited to 30V, these allowances have become moot. How do I use the branch circuit's overcurrent device to protect a 30V circuit? The branch circuit is not going to be rated 30V, it will be rated 120V (or more). That means the Class 1 circuit went through some sort of voltage changing equipment, which means 724.42 (D) or (E) applies.
Also, as I indicated in my public input, if a feeder's overcurrent device protects the conductor at its ampacity, then it is NOT a tap. A tap, by defnition, is a wire that is protected ABOVE its ampacity.

Related Item

- PI 564

Submitter Information Verification

Submitter Full Name: Ryan Jackson
Organization: Self-employed
Street Address:
City:
State:
Zip:

Submittal Date: Thu Aug 22 15:32:14 EDT 2024
Committee: NEC-P03

Public Comment No. 941-NFPA 70-2024 [Section No. 725.1]

725.1 Scope.

This article covers power-limited circuits, including power-limited remote-control and signaling circuits, that are not an integral part of a device or of utilization equipment.

Informational Note No. 1: The circuits described herein are characterized by usage and electrical power limitations that differentiate them from electric light and power circuits; therefore, alternative requirements are given regarding minimum wire sizes, ampacity adjustment and correction factors, overcurrent protection, insulation requirements, and wiring methods and materials.

Informational Note No. 2: See ~~300~~ 206 .~~28~~ 4 . for classifications of remote-control and signaling circuits.

Additional Proposed Changes

File Name	Description	Approved
Limited_Energy_Roster-2026_2nd_Draft.pdf	Limited-Energy Task Group Roster-2nd Draft	

Statement of Problem and Substantiation for Public Comment

This public comment is submitted on behalf of the Limited-Energy Task Group (see attached roster) to update the reference in the Informational Note No. 2 to 725.1. This reference may need to be updated based on the action of the NEC-AAC Task Group responsible to determine the location of these requirements.

Related Item

- CCN-264

Submitter Information Verification

Submitter Full Name: Kyle Krueger
Organization: NECA
Affiliation: NECA
Street Address:
City:
State:
Zip:

Submittal Date: Wed Aug 07 17:38:13 EDT 2024
Committee: NEC-P03

Limited Energy Task Group [2nd Draft]					
No.	First Name	Last Name	Class.	Organization	Other Committees
1	Kyle	Krueger	[I/M]	NECA	NEC-Correlating Comittee CMP 3 NFPA 72-Correlating Committee
2	Ernie	Gallo	[U/T]	NEBScore	
3	Derrick	Atkins	[L]	Minneapolis Electrical JA	NEC-Correlating Committee CMP 5
4	Anthony	Tassone	[R/T]	UL Solutions	CMP 3 CMP 16
5	Chad	Jones	[M]	Cisco	CMP 3
6	Sam	Rokowski	[I/M]	Maddox Inc.	CMP 3
7	George	Bish	[M]	Amazon/Ring Protect Inc	CMP 16
8	Trevor	Bowmer	[U]	Telecom Consulting	NEC Correlating Committee CMP 16
9	Ronald	Tellas	[M]	CCCA	CMP 3 CMP 16
10	Tim	Mikloiche	[E]	IAEI	CMP 3
11	Ryan	Jackosn	[M]	Steel Tube Industry	CMP 3
12	Diana	Lettkeman	[M]	Dish	CMP 16
13	John	Kacperski	[L]	IBEW	CMP 16

Public Comment No. 1022-NFPA 70-2024 [New Section after 725.127]

Working Space

The working space dimensions detailed in 110.26(A) shall not be required for Class 2 equipment.

Statement of Problem and Substantiation for Public Comment

This was PI 428. In the PI that i submitted, i erroneously applied this to both Class 2 and Class 3 equipment. The Code panel was correct in pointing out that it was incorrect to include Class 3 equipment. The Code panel also pointed out that there is already an allowance, in 110.26(A)(1)(b), to allow relaxation of the dimensions for energized working space. However, the relaxation in 110.26(A)(1)(b) is in the depth section. The relaxation should apply to Width and Height as well. I have rewritten the proposed language so that it only pertains to Class 2 equipment.

Related Item

- 428-NFPA 70-2023

Submitter Information Verification

Submitter Full Name: Eric Stromberg
Organization: Los Alamos National Laboratory
Affiliation: Self
Street Address:
City:
State:
Zip:

Submittal Date: Sun Aug 11 14:55:30 EDT 2024
Committee: NEC-P03

Public Comment No. 1694-NFPA 70-2024 [Section No. 725.136]

~~**725.136** Separation from Electric Light, Power, Class 1, Non-Power-Limited Fire Alarm Circuit Conductors, and Medium-Power Network-Powered Broadband Communications Cables.~~

~~**(A)** General.~~

~~Cables and conductors of Class 2 and Class 3 circuits shall not be placed in any cable, cable tray, compartment, enclosure, manhole, outlet box, device box, raceway, or similar fitting with conductors of electric light, power, Class 1, non-power-limited fire alarm circuits, and medium-power network-powered broadband communications circuits unless permitted by 725.136(B) through 725.136(I) :~~

~~**(B)** Separated by Barriers.~~

~~Class 2 and Class 3 circuits shall be permitted to be installed together with the conductors of electric light, power, Class 1, non-power-limited fire alarm, and medium-power network-powered broadband communications circuits where they are separated by a barrier.~~

~~**(C)** Raceways Within Enclosures.~~

~~In enclosures, Class 2 and Class 3 circuits shall be permitted to be installed in a raceway to separate them from Class 1, non-power-limited fire alarm, and medium-power network-powered broadband communications circuits.~~

~~**(D)** Associated Systems Within Enclosures.~~

~~Class 2 and Class 3 circuit conductors in compartments, enclosures, device boxes, outlet boxes, or similar fittings shall be permitted to be installed with electric light, power, Class 1, non-power-limited fire alarm, and medium-power network-powered broadband communications circuits where they are introduced solely to connect the equipment connected to Class 2 and Class 3 circuits, and where one of the following applies:~~

(1) ~~The electric light, power, Class 1, non-power-limited fire alarm, and medium-power network-powered broadband communications circuit conductors are routed to maintain a minimum of 6 mm (0.25 in.) separation from the conductors and cables of Class 2 and Class 3 circuits.~~

(2) ~~The circuit conductors operate at 150 volts or less to ground and comply with one of the following:~~

(3) ~~The Class 2 and Class 3 circuits are installed using Type CL3, Type CL3R, or Type CL3P or permitted substitute cables if these Class 3 cable conductors extending beyond the jacket are separated by a minimum of 6 mm (0.25 in.) or by a nonconductive sleeve or nonconductive barrier from all other conductors.~~

(4) ~~The Class 2 and Class 3 circuit conductors are installed as a Class 1 circuit in accordance with 724.40 :~~

~~**(E)** Enclosures with Single Opening.~~

~~Class 2 and Class 3 circuit conductors entering compartments, enclosures, device boxes, outlet boxes, or similar fittings shall be permitted to be installed with Class 1, non-power-limited fire alarm, and medium-power network-powered broadband communications circuits where they are introduced solely to connect the equipment connected to Class 2 and Class 3 circuits. Where Class 2 and Class 3 circuit conductors must enter an enclosure that is provided with a single opening, they shall be permitted to enter through a single fitting (such as a tee) if the conductors are separated from the conductors of the other circuits by a continuous and firmly fixed nonconductor, such as flexible tubing.~~

~~**(F)** Manholes.~~

~~Underground Class 2 and Class 3 circuit conductors in a manhole shall be permitted to be installed with Class 1, non-power-limited fire alarm, and medium-power network-powered broadband communications circuits where one of the following conditions is met:~~

(1) ~~The electric light, power, Class 1, non-power-limited fire alarm, and medium-power network-powered broadband communications circuit conductors are in a metal-enclosed cable or Type UF cable.~~

(2) ~~The Class 2 and Class 3 circuit conductors are permanently and effectively separated from the conductors of other circuits by a continuous and firmly fixed nonconductor, such as flexible tubing, in addition to the insulation or covering on the wire.~~

(3) ~~The Class 2 and Class 3 circuit conductors are permanently and effectively separated from conductors of the other circuits and securely fastened to racks, insulators, or other approved supports.~~

~~**(G)** Cable Trays.~~

~~Class 2 and Class 3 circuit conductors shall be permitted to be installed in cable trays where the conductors of the electric light, Class 1, and non-power-limited fire alarm circuits are separated by a solid fixed barrier of a material compatible with the cable tray or where the Class 2 or Class 3 circuits are installed in Type MC cable.~~

~~**(H)** Where Protected.~~

~~Class 2 and Class 3 circuits shall be permitted to be installed together with the conductors of electric light, power, Class 1, non-power-limited fire alarm, and medium-power network-powered broadband communications circuits if they are functionally associated and are installed using Class 1 wiring methods in accordance with 724.46.~~

~~**(I)** Other Applications.~~

~~For other applications, conductors of Class 2 and Class 3 circuits shall be separated by at least 50 mm (2 in.) from conductors of any electric light, power, Class 1, non-power-limited fire alarm, or medium-power network-powered broadband communications circuits unless one of the following conditions is met:~~

(1) ~~Either all of the electric light, power, Class 1, non-power-limited fire alarm, and medium-power network-powered broadband communications circuit conductors or all of the Class 2 and Class 3 circuit conductors are in a raceway or in metal-sheathed, metal-clad, nonmetallic-sheathed, Type TC, or Type UF cables.~~

(2) ~~All of the electric light, power, Class 1, non-power-limited fire alarm, and medium-power network-powered broadband communications circuit conductors are permanently separated from all of the Class 2 and Class 3 circuit conductors by a continuous and firmly fixed nonconductor, such as porcelain tubes or flexible tubing, in addition to the insulation on the conductors.~~

Additional Proposed Changes

File Name	Description	Approved
Limited_Energy_Roster-2026_2nd_Draft.pdf	LE Task Group Roster 2nd Draft	

Statement of Problem and Substantiation for Public Comment

This public comment is submitted on behalf of the Limited-Energy Task Group[See attached roster] to delete the duplicate requirements found in Section 725.136(A)-(I). The requirements are now more appropriately located in Part I of NEW Article 722(section 722.13) to apply generaly to all limited-energy cable installations.

Related Public Comments for This Document

Related Comment	Relationship
Public Comment No. 1684-NFPA 70-2024 [New Section after 722.12]	PC to create new section 722.13.

Related Item

- FCR-238

Submitter Information Verification

Submitter Full Name: Kyle Krueger
Organization: NECA
Affiliation: NECA
Street Address:
City:
State:
Zip:

Submittal Date: Mon Aug 26 12:23:17 EDT 2024
Committee: NEC-P03

Limited Energy Task Group [2nd Draft]					
No.	First Name	Last Name	Class.	Organization	Other Committees
1	Kyle	Krueger	[I/M]	NECA	NEC-Correlating Comittee CMP 3 NFPA 72-Correlating Committee
2	Ernie	Gallo	[U/T]	NEBScore	
3	Derrick	Atkins	[L]	Minneapolis Electrical JA	NEC-Correlating Committee CMP 5
4	Anthony	Tassone	[R/T]	UL Solutions	CMP 3 CMP 16
5	Chad	Jones	[M]	Cisco	CMP 3
6	Sam	Rokowski	[I/M]	Maddox Inc.	CMP 3
7	George	Bish	[M]	Amazon/Ring Protect Inc	CMP 16
8	Trevor	Bowmer	[U]	Telecom Consulting	NEC Correlating Committee CMP 16
9	Ronald	Tellas	[M]	CCCA	CMP 3 CMP 16
10	Tim	Mikloiche	[E]	IAEI	CMP 3
11	Ryan	Jackosn	[M]	Steel Tube Industry	CMP 3
12	Diana	Lettkeman	[M]	Dish	CMP 16
13	John	Kacperski	[L]	IBEW	CMP 16

Public Comment No. 1536-NFPA 70-2024 [Section No. 725.139]

~~**725.139** Installation of Conductors of Different Circuits in the Same Cable, Enclosure, Cable Tray, Raceway, or Cable Routing Assembly.~~

~~**(A)** Two or More Class 2 Circuits.~~

~~Conductors of two or more Class 2 circuits shall be permitted within the same cable, enclosure, raceway, or cable routing assembly.~~

~~**(B)** Two or More Class 3 Circuits.~~

~~Conductors of two or more Class 3 circuits shall be permitted within the same cable, enclosure, raceway, or cable routing assembly.~~

~~**(C)** Class 2 Circuits with Class 3 Circuits.~~

~~Conductors of one or more Class 2 circuits shall be permitted within the same cable, enclosure, raceway, or cable routing assembly with conductors of Class 3 circuits if the insulation of the Class 2 circuit conductors in the cable, enclosure, raceway, or cable routing assembly is at least that required for Class 3 circuits.~~

~~**(D)** Class 2 and Class 3 Circuits with Communications Circuits.~~

~~**(1)** Communications Cables.~~

~~Conductors of one or more Class 2 or Class 3 circuits shall be permitted in the same cable with conductors of communications circuits if the cable is a listed communications cable installed in accordance with Part V of Article 800 . The cables shall be listed as communications cables.~~

~~**(2)** Composite Cables.~~

~~Cables constructed of individually listed Class 2, Class 3, and communications cables under a common jacket shall be permitted to be classified as communications cables. The fire resistance rating of the composite cable shall be determined by the performance of the composite cable.~~

~~**(E)** Class 2 or Class 3 Cables with Other Circuit Cables.~~

~~Jacketed cables of Class 2 or Class 3 circuits shall be permitted in the same enclosure, cable tray, raceway, or cable routing assembly with jacketed cables of any of the following:~~

(1) ~~Power-limited fire alarm systems in compliance with Article 760 , Parts I and III~~

(2) ~~Nonconductive and conductive optical fiber cables in compliance with Article 722 , Parts I and III~~

(3) ~~Communications circuits in compliance with Article 722 , Parts I and III~~

(4) ~~Community antenna television and radio distribution systems in compliance with Article 722 , Parts I and III~~

(5) ~~Low-power, network-powered broadband communications in compliance with Article 722 , Parts I and III~~

~~**(F)** Audio System Circuits and Power-Limited Fire Alarm (PLFA) Circuits.~~

~~Audio system circuits described in 640.9(C) and installed using Class 2 or Class 3 wiring methods in compliance with 794.135 shall not be installed in the same cable, raceway, or cable routing assembly with PLFA circuits or cables.~~

Additional Proposed Changes

File Name	Description	Approved
Limited_Energy_Roster-2026_2nd_Draft.pdf	Limited-Energy Task Group Roster-2nd Draft	

Statement of Problem and Substantiation for Public Comment

This public comment is submitted on behalf of the Limited-Energy Task Group (see attached task group roster) to delete the duplicate requirements found in Section 725.139(A)-(F). The requirements are now more appropriately located in the Section 722.13 and 722.14 with the other general cabling requirements.

Related Public Comments for This Document

Related Comment	Relationship
Public Comment No. 1312-NFPA 70-2024 [New Section after 722.182]	PC creating new Article 723

Related Item

- FCR-238

Submitter Information Verification

Submitter Full Name: Kyle Krueger
Organization: NECA
Affiliation: NECA
Street Address:
City:
State:
Zip:

Submittal Date: Fri Aug 23 17:08:35 EDT 2024
Committee: NEC-P03

Limited Energy Task Group [2nd Draft]					
No.	First Name	Last Name	Class.	Organization	Other Committees
1	Kyle	Krueger	[I/M]	NECA	NEC-Correlating Comittee CMP 3 NFPA 72-Correlating Committee
2	Ernie	Gallo	[U/T]	NEBScore	
3	Derrick	Atkins	[L]	Minneapolis Electrical JA	NEC-Correlating Committee CMP 5
4	Anthony	Tassone	[R/T]	UL Solutions	CMP 3 CMP 16
5	Chad	Jones	[M]	Cisco	CMP 3
6	Sam	Rokowski	[I/M]	Maddox Inc.	CMP 3
7	George	Bish	[M]	Amazon/Ring Protect Inc	CMP 16
8	Trevor	Bowmer	[U]	Telecom Consulting	NEC Correlating Committee CMP 16
9	Ronald	Tellas	[M]	CCCA	CMP 3 CMP 16
10	Tim	Mikloiche	[E]	IAEI	CMP 3
11	Ryan	Jackosn	[M]	Steel Tube Industry	CMP 3
12	Diana	Lettkeman	[M]	Dish	CMP 16
13	John	Kacperski	[L]	IBEW	CMP 16

Public Comment No. 1383-NFPA 70-2024 [Section No. 726.4]

~~**726.4** Other Requirements.~~

~~The listing of cables for Class 4 circuits shall comply with Article 722 , Part II and the installation of cables for Class 4 circuits shall comply with Article 722 , Part I.~~

Additional Proposed Changes

File Name	Description	Approved
Limited_Energy_Roster-2026_2nd_Draft.pdf	Limited-Energy Task Group Roster-2nd Draft	

Statement of Problem and Substantiation for Public Comment

This public comment is submitted on behalf of the Limited-Energy Task Group (see attached roster) to delete section 726.4 as it provides duplicate requirements for Class 4 system installations. Cables are already required to be listed in 722.2 and there is no need to restate the applicability of 722, Part I for installation requirements.

Related Item

- PI-8297

Submitter Information Verification

Submitter Full Name: Kyle Krueger
Organization: NECA
Affiliation: NECA
Street Address:
City:
State:
Zip:

Submittal Date: Wed Aug 21 16:58:31 EDT 2024
Committee: NEC-P03

Limited Energy Task Group [2nd Draft]					
No.	First Name	Last Name	Class.	Organization	Other Committees
1	Kyle	Krueger	[I/M]	NECA	NEC-Correlating Comittee CMP 3 NFPA 72-Correlating Committee
2	Ernie	Gallo	[U/T]	NEBScore	
3	Derrick	Atkins	[L]	Minneapolis Electrical JA	NEC-Correlating Committee CMP 5
4	Anthony	Tassone	[R/T]	UL Solutions	CMP 3 CMP 16
5	Chad	Jones	[M]	Cisco	CMP 3
6	Sam	Rokowski	[I/M]	Maddox Inc.	CMP 3
7	George	Bish	[M]	Amazon/Ring Protect Inc	CMP 16
8	Trevor	Bowmer	[U]	Telecom Consulting	NEC Correlating Committee CMP 16
9	Ronald	Tellas	[M]	CCCA	CMP 3 CMP 16
10	Tim	Mikloiche	[E]	IAEI	CMP 3
11	Ryan	Jackosn	[M]	Steel Tube Industry	CMP 3
12	Diana	Lettkeman	[M]	Dish	CMP 16
13	John	Kacperski	[L]	IBEW	CMP 16

Public Comment No. 1699-NFPA 70-2024 [Section No. 726.136]

~~**726.136** Separation from Electric Light, Power, Class 1, Non–Power-Limited Fire Alarm Circuit, and Medium-Power Network-Powered Broadband Communications Cables.~~

~~**(A)** General.~~

~~Cables and conductors of Class 4 circuits shall not be placed in any cable, cable tray, compartment, enclosure, manhole, outlet box, device box, raceway, or similar fitting with conductors of electric light, power, Class 1, non–power-limited fire alarm, and medium-power network-powered broadband communications circuits unless permitted by 726.136(B) through 726.136(H) :~~

~~**(B)** Separated by Barriers.~~

~~Class 4 circuits shall be permitted to be installed together with the conductors of electric light, power, Class 1, non–power-limited fire alarm, and medium-power network-powered broadband communications circuits where they are separated by a barrier.~~

~~**(C)** Raceways Within Enclosures.~~

~~In enclosures, Class 4 circuits shall be permitted to be installed in a raceway to separate them from Class 1, non–power-limited fire alarm, and medium-power network-powered broadband communications circuits.~~

~~**(D)** Associated Systems Within Enclosures.~~

~~Class 4 circuit conductors in compartments, enclosures, device boxes, outlet boxes, or similar fittings shall be permitted to be installed with electric light, power, Class 1, non-power-limited fire alarm, and medium-power network-powered broadband communications circuits where they are introduced solely to connect the equipment connected to Class 4 circuits, and where either of the following applies:~~

(1) ~~The electric light, power, Class 1, non-power-limited fire alarm, and medium-power network-powered broadband communications circuit conductors are routed to maintain a minimum of 6 mm (0.25 in.) separation from the conductors and cables of Class 4 circuits.~~

(2) ~~The non-Class 4 circuit conductors operate at 150 volts or less to ground and the Class 4 circuits are installed using Type CL4, Type CL4R, or Type CL4P cables and CL4 cable conductors extending beyond the jacket are separated by a minimum of 6 mm (0.25 in.) or by a nonconductive sleeve or nonconductive barrier from all other conductors.~~

~~**(E)** Enclosures with Single Openings.~~

~~Class 4 circuit conductors entering compartments, enclosures, device boxes, outlet boxes, or similar fittings shall be permitted to be installed with Class 1, non–power-limited fire alarm, and medium-power network-powered broadband communications circuits where they are introduced solely to connect the equipment connected to Class 4 circuits. Where Class 4 circuit conductors must enter an enclosure that is provided with a single opening, they shall be permitted to enter through a single fitting (such as a tee) if the conductors are separated from the conductors of the other circuits by a continuous and firmly fixed nonconductor, such as flexible tubing.~~

~~**(F)** Manholes.~~

~~Underground Class 4 circuit conductors in a manhole shall be permitted to be installed with Class 1, non–power-limited fire alarm, and medium-power network-powered broadband communications circuits where one of the following conditions is met:~~

(1) ~~The electric light, power, Class 1, non–power-limited fire alarm, and medium-power network-powered broadband communications circuit conductors are in a metal-enclosed cable or Type UF cable.~~

(2) ~~The Class 4 circuit conductors are permanently and effectively separated from the conductors of other circuits by a continuous and firmly fixed nonconductor, such as flexible tubing, in addition to the insulation or covering on the wire.~~

(3) ~~The Class 4 circuit conductors are permanently and effectively separated from conductors of the other circuits and securely fastened to racks, insulators, or other approved supports.~~

~~**(G)** Cable Trays.~~

~~Class 4 circuit conductors shall be permitted to be installed in cable trays where the conductors of the electric light, Class 1, and non–power-limited fire alarm circuits are separated by a solid fixed barrier of a material compatible with the cable tray or where the Class 4 circuits are installed in Type MC cable.~~

~~**(H)** Other Applications.~~

~~For other applications, conductors of Class 4 circuits shall be separated by at least 50 mm (2 in.) from conductors of any electric light, power, Class 1, non–power-limited fire alarm, or medium-power network-powered broadband communications circuits unless one of the following conditions is met:~~

(1) ~~Either all of the electric light, power, Class 1, non–power-limited fire alarm, and medium-power network-powered broadband communications circuit conductors or all of the Class 4 circuit conductors are in a raceway or in metal-sheathed, metal-clad, non–metallic-sheathed, Type TC, or Type UF cables~~

(2) ~~All of the electric light, power, Class 1, non–power-limited fire alarm, and medium-power network-powered broadband communications circuit conductors are permanently separated from all of the Class 4 circuit conductors by a continuous and firmly fixed nonconductor, such as porcelain tubes or flexible tubing, in addition to the insulation on the conductors~~

Additional Proposed Changes

File Name	Description	Approved
Limited_Energy_Roster-2026_2nd_Draft.pdf	Limited-Energy Task Group Roster-2nd Draft	

Statement of Problem and Substantiation for Public Comment

This public comment is submitted on behalf of the Limited-Energy Task Group (see attached task group roster) to delete section 726.136 as this is already covered by sections 722.13 in the limited-energy cable article. This deletion was missed in the first draft relocation efforts.

Related Public Comments for This Document

Related Comment	Relationship
Public Comment No. 1684-NFPA 70-2024 [New Section after 722.12]	PC creating new section 722.13

Related Item

- PI-3439

Submitter Information Verification

Submitter Full Name: Kyle Krueger
Organization: NECA
Affiliation: NECA
Street Address:
City:
State:
Zip:

Submittal Date: Mon Aug 26 12:47:23 EDT 2024
Committee: NEC-P03

Limited Energy Task Group [2nd Draft]					
No.	First Name	Last Name	Class.	Organization	Other Committees
1	Kyle	Krueger	[I/M]	NECA	NEC-Correlating Comittee CMP 3 NFPA 72-Correlating Committee
2	Ernie	Gallo	[U/T]	NEBScore	
3	Derrick	Atkins	[L]	Minneapolis Electrical JA	NEC-Correlating Committee CMP 5
4	Anthony	Tassone	[R/T]	UL Solutions	CMP 3 CMP 16
5	Chad	Jones	[M]	Cisco	CMP 3
6	Sam	Rokowski	[I/M]	Maddox Inc.	CMP 3
7	George	Bish	[M]	Amazon/Ring Protect Inc	CMP 16
8	Trevor	Bowmer	[U]	Telecom Consulting	NEC Correlating Committee CMP 16
9	Ronald	Tellas	[M]	CCCA	CMP 3 CMP 16
10	Tim	Mikloiche	[E]	IAEI	CMP 3
11	Ryan	Jackosn	[M]	Steel Tube Industry	CMP 3
12	Diana	Lettkeman	[M]	Dish	CMP 16
13	John	Kacperski	[L]	IBEW	CMP 16

Public Comment No. 1430-NFPA 70-2024 [Section No. 726.139]

~~**726.139** Installation of Conductors of Different Circuits in the Same Cable, Enclosure, Cable Tray, Raceway, or Cable Routing Assembly.~~

~~**(A)** Two or More Class 4 Circuits.~~

~~Conductors of two or more Class 4 circuits shall be permitted within the same cable, enclosure, raceway, or cable routing assembly.~~

~~**(B)** Class 4 Circuits With Class 2, Class 3, or Communications Circuits.~~

~~Conductors of one or more Class 4 circuits shall be permitted within the same cable assembly as conductors of Class 2, Class 3, or communications circuits if the insulation of the Class 2, Class 3, or communications circuit conductors in the cable is at least that required for Class 4 circuits. Class 4 cables shall be permitted within the same enclosure, raceway, or cable routing assembly as Class 2, Class 3, or communications circuits.~~

~~**(C)** Class 4 Cables With Other Circuit Cables.~~

~~Jacketed cables of Class 4 circuits shall be permitted in the same enclosure, cable tray, raceway, or cable routing assembly with jacketed cables of any of the following:~~

(1) ~~Power-limited fire alarm systems in compliance with Article 760, Parts I and III~~

(2) ~~Nonconductive and conductive optical fiber cables in compliance with Article 770, Parts I and IV~~

(3) ~~Communications circuits in compliance with Article 805, Parts I and IV~~

(4) ~~Community antenna television and radio distribution systems in compliance with Article 820, Parts I and IV~~

(5) ~~Low-power, network-powered broadband communications in compliance with Article 830, Parts I and IV~~

Additional Proposed Changes

File Name	Description	Approved
Limited_Energy_Roster-2026_2nd_Draft.pdf	Limited-Energy Task Group Roster-2nd Draft	

Statement of Problem and Substantiation for Public Comment

This public comment is submitted on behalf of the Limited-Energy Task Group (see attached roster) to delete the requirements in Section 726.139 as they have been more appropriately relocated to new sections 722.150-722.152 with the rest of the Class 4 cable requirements.

Related Public Comments for This Document

Related Comment	Relationship
Public Comment No. 1428-NFPA 70-2024 [Section No. 722.100(A)]	PC deleting info note 4 from 722.100(A) as it is now located in 722.150.
Public Comment No. 1429-NFPA 70-2024 [Section No. 722.100(A)(16)]	PC deleting section 722.100(A)(16) as it is relocated to 722.150.
Public Comment No. 1431-NFPA 70-2024 [Section No. 722.150(A)]	PC revising 722.150(A) and adding info note from 722.100(A).
Public Comment No. 1432-NFPA 70-2024 [New Section after 722.150(C)]	PC creating section 722.151 to house the requirements deleted from 722.100(A)(16).
Public Comment No. 1434-NFPA 70-2024 [New Section after 722.150(C)]	PC adding new section 722.152 to house class 4 cable requirements from 726.139.
Public Comment No. 1428-NFPA 70-2024 [Section No. 722.100(A)]	
Public Comment No. 1429-NFPA 70-2024 [Section No. 722.100(A)(16)]	
Public Comment No. 1432-NFPA 70-2024 [New Section after 722.150(C)]	
Public Comment No. 1434-NFPA 70-2024 [New Section after 722.150(C)]	

Related Item

- PI-3439

Submitter Information Verification

Submitter Full Name: Kyle Krueger
Organization: NECA
Affiliation: NECA
Street Address:
City:
State:
Zip:

Submittal Date: Thu Aug 22 15:47:51 EDT 2024
Committee: NEC-P03

Limited Energy Task Group [2nd Draft]					
No.	First Name	Last Name	Class.	Organization	Other Committees
1	Kyle	Krueger	[I/M]	NECA	NEC-Correlating Comittee CMP 3 NFPA 72-Correlating Committee
2	Ernie	Gallo	[U/T]	NEBScore	
3	Derrick	Atkins	[L]	Minneapolis Electrical JA	NEC-Correlating Committee CMP 5
4	Anthony	Tassone	[R/T]	UL Solutions	CMP 3 CMP 16
5	Chad	Jones	[M]	Cisco	CMP 3
6	Sam	Rokowski	[I/M]	Maddox Inc.	CMP 3
7	George	Bish	[M]	Amazon/Ring Protect Inc	CMP 16
8	Trevor	Bowmer	[U]	Telecom Consulting	NEC Correlating Committee CMP 16
9	Ronald	Tellas	[M]	CCCA	CMP 3 CMP 16
10	Tim	Mikloiche	[E]	IAEI	CMP 3
11	Ryan	Jackosn	[M]	Steel Tube Industry	CMP 3
12	Diana	Lettkeman	[M]	Dish	CMP 16
13	John	Kacperski	[L]	IBEW	CMP 16

Public Comment No. 1350-NFPA 70-2024 [Section No. 726.139(C)]

(C)

~~- Class 4 Cables~~

~~Jacketed cables of Class 4 circuits~~
Class 4 Cables With Other Circuit Cables.

~~Listed Class 4 cables shall be permitted in the same enclosure, cable tray, raceway, or cable routing assembly with~~

~~jacketed cables of any of the following:~~

(1) ~~Power-limited fire alarm systems in compliance with Article 760, Parts I and III~~

(2) ~~Nonconductive and conductive optical fiber cables in compliance with Article 770, Parts I and IV~~

(3) ~~Communications circuits in compliance with Article 805, Parts I and IV~~

(4) ~~Community antenna television and radio distribution systems in compliance with Article 820, Parts I and IV~~

(5) ~~Low-power, network-powered broadband communications in compliance with Article 830, Parts I and IV~~

~~other listed limited energy cables.~~

Statement of Problem and Substantiation for Public Comment

The recommended text to 726.139(C) greatly simplifies the text by simply stating that Class 4 cables can be run with other limited-energy cables.

Related Item

- PI 4032

Submitter Information Verification

Submitter Full Name: David Kiddoo
Organization: CCCA
Affiliation: Communications Cable & Connectivity Association
Street Address:
City:
State:
Zip:

Submittal Date: Wed Aug 21 08:18:44 EDT 2024
Committee: NEC-P03

Public Comment No. 674-NFPA 70-2024 [Section No. 742.1]

742.1 Scope.

This article covers the overvoltage protection requirements for Class 1 power-limited circuits, Class 2 circuits, Class 3 circuits, Class 4 circuits, optical fiber systems, communications systems, antenna systems, community antenna systems, network-powered broadband communications systems, premises-powered broadband communications systems, and power-limited fire alarm systems.

Additional Proposed Changes

File Name	Description	Approved
CN_375.pdf		

Statement of Problem and Substantiation for Public Comment

NOTE: The following CC Note No. 375 appeared in the First Draft Report.

The Correlating Committee requests Code Making Panel 3 to review the applicability of the scope statement of the article and if Class 1 to Class 4 circuits are appropriately listed in the scope statement. (Section 742.1)

Related Item

- Correlating Committee Note No. 375

Submitter Information Verification

Submitter Full Name: CC Notes
Organization: NEC Correlating Committee
Street Address:
City:
State:
Zip:

Submittal Date: Fri Aug 02 10:52:16 EDT 2024
Committee: NEC-P03

Correlating Committee Note No. 375-NFPA 70-2024 [Global Input]

Submitter Information Verification

Committee: NEC-AAC
Submittal Date: Fri May 10 10:25:08 EDT 2024

Committee Statement

Committee Statement: The Correlating Committee requests Code Making Panel 3 to review the applicability of the scope statement of the article and if Class 1 to Class 4 circuits are appropriately listed in the scope statement. (Section 742.1)

Ballot Results

✔ **This item has passed ballot**

12 Eligible Voters
1 Not Returned
10 Affirmative All
1 Affirmative with Comments
0 Negative with Comments
0 Abstention

Not Returned

McDaniel, Roger D.

Affirmative All

Ayer, Lawrence S.
Hickman, Palmer L.
Holub, Richard A.
Jackson, Peter D.
Kendall, David H.
Manche, Alan
Osborne, Robert D.
Porter, Christine T.
Schultheis, Timothy James
Williams, David A.

Affirmative with Comment

Bowmer, Trevor N.

The content of Article 742 covers old Article 800 communications cables and does not seem to contain specific material on Class 2, 3 and 4 systems. The protection and listing of Class 2 and 3 systems is found in Article 725. The Class 4 systems protection schemes are very different from other systems and are better covered in Article 726.

Public Comment No. 974-NFPA 70-2024 [Section No. 742.1]

742.1 Scope.

This article covers the overvoltage protection requirements for ~~Class 1 power-~~ limited- ~~circuits, Class 2 circuits, Class 3 circuits, Class 4 circuits, optical fiber systems, communications systems, antenna systems, community antenna systems, network-powered broadband communications systems, premises-powered broadband communications systems, and power-limited fire alarm systems~~ -energy system installations .

Statement of Problem and Substantiation for Public Comment

This public comment is submitted on behalf of the Limited-Energy Grounding and Bonding Task Group to revise the scope of new article 742 to simplify and enhance usability based on new and revised definitions for limited-energy cables and limited-energy systems
See PC-1370 & 1371

Limited-Energy Grounding and Bonding Task Group Members:
Derrick Atkins CMP-5 & NEC-AAC
Kyle Krueger CMP-3 & NEC-AAC
Trevor Bowmer CMP 16 & NEC-AAC
Luigi Prezioso CMP 16 Chair

Related Public Comments for This Document

Related Comment	Relationship
Public Comment No. 1370-NFPA 70-2024 [Definition: Limited-Energy System.]	PC revising definition of limited-energy system.
Public Comment No. 1371-NFPA 70-2024 [New Definition after Definition: Cable Joint.]	PC creating the new definition of limited-energy cable.

Related Item

- CCN 86

Submitter Information Verification

Submitter Full Name: Kyle Krueger
Organization: NECA
Affiliation: NECA
Street Address:
City:
State:
Zip:

Submittal Date: Thu Aug 08 17:16:21 EDT 2024
Committee: NEC-P03

Public Comment No. 1384-NFPA 70-2024 [Section No. 742.10(A)]

(A) Application.

A listed primary protector shall be provided on each communication circuit run partly or entirely in aerial wire or aerial cable not confined within a block. Also, a listed primary protector shall be provided on each circuit, aerial or underground, located within the block containing the building served so as to be exposed to accidental contact with electric light or power conductors operating at over 300 volts to ground. In addition, where there exists a lightning exposure, each interbuilding circuit on a premises shall be protected by a listed primary protector at each end of the interbuilding circuit.

Exception: Primary electrical protection shall not be required on the network-powered broadband communications conductors where electrical protection is provided on the derived circuit(s) (output side of the NIU) in accordance with ~~752~~ 742 .10(D)(3).

Informational Note No. 1: On network-powered broadband communications conductors not exposed to lightning or accidental contact with power conductors, providing primary electrical protection in accordance with this section helps protect against other hazards, such as ground potential rise caused by power fault currents, and above-normal voltages induced by fault currents on power circuits in proximity to the network-powered broadband communications conductors.

Informational Note No. 2: Communications circuits are considered to have a lightning exposure unless one or more of the following conditions exists:

(1) Circuits in large metropolitan areas where buildings are close together and sufficiently high to intercept lightning

(2) Areas having an average of five or fewer thunderstorm days each year and earth resistivity of less than 100 ohm-meters, such as found along the Pacific coast

Informational Note No. 3: On a circuit not exposed to accidental contact with power conductors, providing a listed primary protector in accordance with this section helps protect against other hazards, such as lightning and above-normal voltages induced by fault currents on power circuits in proximity to the communications circuit.

Informational Note No. 4: Interbuilding circuits are considered to have a lightning exposure unless one or more of the following conditions exist:

(1) Circuits in large metropolitan areas where buildings are close together and sufficiently high to intercept lightning

(2) Interbuilding cable runs of 42 m (140 ft) or less, directly buried or in underground conduit, where a continuous metallic cable shield or a continuous metal conduit containing the cable is connected to each building grounding electrode system

(3) Areas having an average of five or fewer thunderstorm days per year and earth resistivity of less than 100 ohm-meters, such as found along the Pacific coast

Informational Note No. 5: See NFPA 780-2026, *Standard for the Installation of Lightning Protection Systems*, for information on lightning protection systems.

Additional Proposed Changes

File Name	Description	Approved
Limited_Energy_Roster-2026_2nd_Draft.pdf	Limited-Energy Task Group Roster-2nd Draft	

Statement of Problem and Substantiation for Public Comment

This public comment is submitted on behalf of the Limited-Energy Task Group (see attached roster) to update and correct the reference in the exception to the correct code section 742.10(A).

Related Item

- FCR-90

Submitter Information Verification

Submitter Full Name: Kyle Krueger
Organization: NECA
Affiliation: NECA
Street Address:
City:
State:
Zip:

Submittal Date: Wed Aug 21 17:00:29 EDT 2024
Committee: NEC-P03

Limited Energy Task Group [2nd Draft]					
No.	First Name	Last Name	Class.	Organization	Other Committees
1	Kyle	Krueger	[I/M]	NECA	NEC-Correlating Comittee CMP 3 NFPA 72-Correlating Committee
2	Ernie	Gallo	[U/T]	NEBScore	
3	Derrick	Atkins	[L]	Minneapolis Electrical JA	NEC-Correlating Committee CMP 5
4	Anthony	Tassone	[R/T]	UL Solutions	CMP 3 CMP 16
5	Chad	Jones	[M]	Cisco	CMP 3
6	Sam	Rokowski	[I/M]	Maddox Inc.	CMP 3
7	George	Bish	[M]	Amazon/Ring Protect Inc	CMP 16
8	Trevor	Bowmer	[U]	Telecom Consulting	NEC Correlating Committee CMP 16
9	Ronald	Tellas	[M]	CCCA	CMP 3 CMP 16
10	Tim	Mikloiche	[E]	IAEI	CMP 3
11	Ryan	Jackosn	[M]	Steel Tube Industry	CMP 3
12	Diana	Lettkeman	[M]	Dish	CMP 16
13	John	Kacperski	[L]	IBEW	CMP 16

Public Comment No. 676-NFPA 70-2024 [Section No. 742.10(B)]

(B) Fuseless Primary Protectors.

Fuseless-type primary protectors shall be permitted under any of the following conditions:

(1) If conductors enter a building through a cable with grounded metallic sheath member(s) and if the conductors in the cable safely fuse on all currents greater than the current-carrying capacity of the primary protector and of the primary protector bonding conductor or grounding electrode conductor

(2) If insulated conductors in accordance with 800.50(A) are used to extend circuits to a building from a cable with an effectively grounded metallic sheath member(s) and if the conductors in the cable or cable stub, or the connections between the insulated conductors and the plant exposed to accidental contact with electric light or power conductors operating at greater than 300 volts to ground, safely fuse on all currents greater than the ampere rating of the primary protector, or the ampacity of the associated insulated conductors and of the primary protector bonding conductor or grounding electrode conductor

(3) If insulated conductors in accordance with 800.50(A) or 800.50(B) are used to extend circuits to a building from other than a cable with metallic sheath member(s), if (1) the primary protector is listed as being suitable for this purpose for application with circuits extending from other than a cable with metallic sheath members and (2) the connections of the insulated conductors to the plant exposed to accidental contact with electric light or power conductors operating at greater than 300 volts to ground or the conductors of the plant exposed to accidental contact with electric light or power conductors operating at greater than 300 volts to ground safely fuse on all currents greater than the ampere rating of the primary protector, or ampacity of the associated insulated conductors and of the primary protector bonding conductor or grounding electrode conductor

(4) If insulated conductors in accordance with 800.50(A) are used to extend circuits aerially to a building from a buried or underground circuit that is unexposed to accidental contact with electric light or power conductors operating at greater than 300 volts to ground

(5) Where insulated conductors in accordance with 800.50(A) are used to extend circuits to a building from cable with an effectively grounded metallic sheath member(s), and where (1) the combination of the primary protector and insulated conductors is listed as being suitable for this purpose for application with circuits extending from a cable with an effectively grounded metallic sheath member(s) and (2) the insulated conductors safely fuse on all currents greater than the ampere rating of the primary protector and the ampacity of the primary protector bonding conductor or grounding electrode conductor

Informational Note: See ANSI/IEEE C2-2023, National Electrical Safety Code, Section 9, for examples of methods of protective grounding that can achieve effective grounding of communications cable sheaths for cables from which communications circuits are extended.

Additional Proposed Changes

File Name	Description	Approved
CN_377.pdf		

Statement of Problem and Substantiation for Public Comment

NOTE: The following CC Note No. 377 appeared in the First Draft Report.

The Correlating Committee directs CMP 5 to consider the use of the words "communications wires and cables" in place of "insulated conductors in accordance with 805.XX" for usability and clarity of the requirement. (New Section 742.10(B))

Related Item

• Correlating Committee Note No. 377

Submitter Information Verification

Submitter Full Name: CC Notes
Organization: NEC Correlating Committee
Street Address:
City:
State:
Zip:

Submittal Date: Fri Aug 02 10:55:36 EDT 2024
Committee: NEC-P03

Correlating Committee Note No. 377-NFPA 70-2024 [Global Input]

Submitter Information Verification

Committee: NEC-AAC
Submittal Date: Fri May 10 10:29:09 EDT 2024

Committee Statement

Committee Statement: The Correlating Committee directs CMP 5 to consider the use of the words "communications wires and cables" in place of "insulated conductors in accordance with 805.XX" for usability and clarity of the requirement. (New Section 742.10(B))

Ballot Results

✔ **This item has passed ballot**

12 Eligible Voters
1 Not Returned
10 Affirmative All
1 Affirmative with Comments
0 Negative with Comments
0 Abstention

Not Returned

McDaniel, Roger D.

Affirmative All

Ayer, Lawrence S.
Hickman, Palmer L.
Holub, Richard A.
Jackson, Peter D.
Kendall, David H.
Manche, Alan
Osborne, Robert D.
Porter, Christine T.
Schultheis, Timothy James
Williams, David A.

Affirmative with Comment

Bowmer, Trevor N.

The reference should be to 800.50 and not 805.50 for the communications wires and cables.

Public Comment No. 1387-NFPA 70-2024 [Section No. 742.10(C)]

(C) Fused Primary Protectors.

Where the requirements listed under ~~752~~ 742 .10(B)(1) through ~~752~~ 742 .10(B)(5) are not met, fused-type primary protectors shall be used. Fused-type primary protectors shall consist of an arrester connected between each line conductor and ground, a fuse in series with each line conductor, and an appropriate mounting arrangement. Primary protector terminals shall be marked to indicate line, instrument, and ground, as applicable.

Additional Proposed Changes

File Name	Description	Approved
Limited_Energy_Roster-2026_2nd_Draft.pdf	Limited-Energy Task Group Roster-2nd Draft	

Statement of Problem and Substantiation for Public Comment

This public comment is submitted on behalf of the Limited-Energy Task Group (see attached roster) to update and correct the reference in 742.10(C) to the proper section 742.10(B).

Related Item

- FCR-90

Submitter Information Verification

Submitter Full Name: Kyle Krueger
Organization: NECA
Affiliation: NECA
Street Address:
City:
State:
Zip:

Submittal Date: Wed Aug 21 17:04:02 EDT 2024
Committee: NEC-P03

Limited Energy Task Group [2nd Draft]					
No.	First Name	Last Name	Class.	Organization	Other Committees
1	Kyle	Krueger	[I/M]	NECA	NEC-Correlating Comittee CMP 3 NFPA 72-Correlating Committee
2	Ernie	Gallo	[U/T]	NEBScore	
3	Derrick	Atkins	[L]	Minneapolis Electrical JA	NEC-Correlating Committee CMP 5
4	Anthony	Tassone	[R/T]	UL Solutions	CMP 3 CMP 16
5	Chad	Jones	[M]	Cisco	CMP 3
6	Sam	Rokowski	[I/M]	Maddox Inc.	CMP 3
7	George	Bish	[M]	Amazon/Ring Protect Inc	CMP 16
8	Trevor	Bowmer	[U]	Telecom Consulting	NEC Correlating Committee CMP 16
9	Ronald	Tellas	[M]	CCCA	CMP 3 CMP 16
10	Tim	Mikloiche	[E]	IAEI	CMP 3
11	Ryan	Jackosn	[M]	Steel Tube Industry	CMP 3
12	Diana	Lettkeman	[M]	Dish	CMP 16
13	John	Kacperski	[L]	IBEW	CMP 16

Public Comment No. 1451-NFPA 70-2024 [New Section after 760.33]

TITLE OF NEW CONTENT

Type your content here ...

760.37. Cybersecurity

Fire Alarm Systems , located in life safety-related infrastructures, that are connected to a communication network and have the capability to be controlled or permit control of any portion of the premises shall comply with either of the following:

(1) The ability to control the Fire Alarm System is limited to a direct connection through a local nonnetworked interface.

(2) The Fire Alarm Systems are connected through a networked interface complying with both of the following methods:

a. The Fire Alarm Systems are identified as being evaluated for cybersecurity.

b. A cybersecurity assessment of the Fire Alarm System is completed and documentation of the assessment and certification is available to those authorized to inspect, operate, and maintain the system.

Informational Note No. 1: See ANSI/ISA 62443, *Cybersecurity Standards series* , UL 2900 *Cybersecurity Standard series* , or the NIST *Framework for Improving Critical Infrastructure Cybersecurity* , Version 1.1 for assessment requirements.

Informational Note No. 2: Examples used to demonstrate the system has been investigated for cybersecurity vulnerabilities could be one of the following:

(1) The ISA Security Compliance Institute (ISCI) conformity assessment program

(2) Certification of compliance by a nationally recognized test laboratory

(3) Manufacturer certification for the specific type and brand of system provided

Informational Note No. 3: Cybersecurity is a specialized field requiring constant, vigilant attention to security vulnerabilities that could arise due to software defects, system configuration changes, or user interactions. Installation of devices that can be secured is an important first step but not sufficient to guarantee a secure system.

Informational Note No. 4: See NEMA CY70001-2023, *Cybersecurity Implementation Guidance for Connected Electrical Infrastructure* , for recommendations on how to meet this requirement.

Informational Note No. 5: Examples of life safety-related infrastructures include, but are not limited to, waste water treatment facilities, water supply facilities, police stations, call centers, financial centers, data centers, and military bases.

Statement of Problem and Substantiation for Public Comment

Let's review the Code Making Panel Statement to resolve Public Input 1259, one sentence at a time.

This first sentence of the Resolution statement follows: "The installation aspect of cybersecurity is already addressed as a general requirement in 110.3(A)(8)". 110.3(A)(8) requires that a fire alarm system, because it is considered life safety equipment, be evaluated in light of cybersecurity. Amazingly, 110.3(A)(8) can be met with a simple evaluation, and that evaluation can actually show that the fire alarm system is totally unprotected against cyber attack. 110.3(A)(8) DOESN'T STATE THAT LIFE SAFETY EQUIPMENT MUST BE PROTECTED AGAINST CYBER ATTACK. IT SIMPLY STATES THAT THE LIFE SAFETY EQUIPMENT MUST BE EVALUATED FOR CYBERSECURITY. YES, YOU READ THAT CORRECTLY, ZERO CYBERSECURITY PROTECTION FOR LIFE SAFETY EQUIPMENT IS ACCEPTABLE IN 110.3(A)(8). THE REQUIRED EVALUATION COULD SHOW THAT THERE IS NO PROTECTION AGAINST CYBER ATTACK AND STILL MEET THE REQUIREMENTS OF 110.3(A)(8)!

The second sentence of the Panel Statement reads: "The scope of NFPA 72 (see Section 1.1.1) indicates that the performance of the system is covered by that document". There are two major issues with this statement. First, NFPA 72, while it is often utilized for insurance purposes, is not typically enforced as law after being codified by state, county, or municipal legislation. In order to assure that Fire Alarm Systems are not cyber-compromised, the protection requirements must be included within the NEC. Electrical Inspectors can have a hard time enforcing NFPA 72. Second, this Public Comment does not address the performance of fire alarm systems, but rather addresses the installation of Fire Alarm Systems so that they are not vulnerable to cyber attack. It's an issue of installation, not performance. Fire alarm systems, with no cyber protection, could still be manufactured and listed (performance). They just couldn't be connected to the internet or be installed in life safety-related infrastructures (installation).

This Public Comment limits the cybersecurity requirement to Fire Alarm Systems located in life safety-related infrastructures.

Most of the cybersecurity focus has been on IT systems. There has been very little public discussion about cybersecurity for Operational Technology (OT), but cyber attacks on OT occur on almost a daily basis. For an example of just how common cyber attacks on life safety related infrastructure have become, let's look at just the water supply and waste water treatment industry. The DNI (Director of National Intelligence), through the CTIIC (Cyber Threat Intelligence Integration Center) recently released a report of 12 cyber attacks on the industrial control systems of water utilities, water systems, and waste water treatment systems, for the six-month period from November 2023 through April 2024. This report can be found at

https://www.google.com/url?sa=t&source=web&rct=j&opi=89978449&url=https://www.dni.gov/files/CTIIC/documents/products/Recent_Cyber_Attacks_on_US_Infrastructure_Underscore_Vulnerability_of_Crit
June2024.pdf&ved=2ahUKEwi5gP7-m4eIAxUakYkEHasyIRQQFnoECB8QAQ&usg=AOvVaw3hJL2DMlRs-CECfmewcXVP

While this example covered attacks on industrial control systems, successful attacks can occur on all electrical equipment that is continuously connected to the internet and even equipment that is only connected to the internet during system updates. (Cyber attacks can lay quiet for years, waiting for an update, and then do their intended damage during the update.)

Hackers can easily destroy unprotected equipment and shut down entire unprotected facilities. Our adversaries are continuously mounting cyber attacks on our life safety-related infrastructure. We have the ability, and obligation, to prevent this type of damage to our infrastructure from malicious cyber attacks.

Informational Note No. 4 was added to correlate with FR 9040 (110.3(A)(8)), FR 9210 (240.6(D)), and FR 8219 (708.7).

Informational Note No. 5 was added to provide examples of life safety-related infrastructure.

THIS PUBLIC COMMENT SIMPLY REQUIRES THAT FIRE ALARM SYSTEMS, LOCATED ONLY IN LIFE SAFETY-RELATED INFRASTRUCTURES, EITHER NOT BE CONNECTED TO THE INTERNET, OR IF THEY ARE CONNECTED TO THE INTERNET, THAT THEY BE “IDENTIFIED” FOR CYBERSECURITY AND THAT AN ASSESSMENT IS PROVIDED.

Related Item

• PI 1259

Submitter Information Verification

Submitter Full Name: Vincent Saporita
Organization: Saporita Consulting
Street Address:
City:
State:
Zip:

Submittal Date: Fri Aug 23 09:02:52 EDT 2024
Committee: NEC-P03

Public Comment No. 126-NFPA 70-2024 [Article 790]

~~**Article 790** General Requirements for Limited-Energy Systems~~

~~**790.1** Scope.~~

~~This article covers general requirements for limited-energy systems. These general requirements apply to Class 2 and Class 3 power limited circuits, Class 4 fault-managed power systems, power limited fire alarm circuits, and optical fiber cables covered by Articles 725, 726, 760, and 770 and communications systems covered by Articles 800, 805, 810, 820, 830, and 840.~~

~~**790.4** Other Articles.~~

~~Only those sections of Article 300 referenced in this article shall apply.~~

~~**790.5** Hazardous (Classified) Locations.~~

~~Cables and equipment shall be permitted to be used in hazardous (classified) locations where specifically permitted by other articles of this code.~~

~~**790.6** Spread of Fire or Products of Combustion.~~

~~Installation of power-limited circuits shall comply with 300.23 .~~

~~**790.7** Ducts, Plenums, and Other Air-Handling Spaces.~~

~~Circuits installed in ducts, plenums, or other space used for environmental air shall comply with 300.25 .~~

~~*Exception No. 1: Cables selected in accordance with Table 794.135(A) and installed in accordance with 300.25(B) , Exception shall be permitted to be installed in ducts specifically fabricated for environmental air.*~~

~~*Exception No. 2: Cables selected in accordance with Table 794.135(A) shall be permitted to be installed in other spaces used for environmental air (plenums).*~~

~~*Exception No. 3: Power-limited fire alarm cables selected in accordance with Table 794.157 and installed in accordance with 794.135 and 300.25(B) Exception shall be permitted to be installed in ducts specifically fabricated for environmental air.*~~

~~*Exception No. 4: Power-limited fire alarm cables selected in accordance with Table 794.157 and installed in accordance with 794.135 shall be permitted to be installed in other spaces used for environmental air (plenums).*~~

~~**790.8** Installation of Conductors and Cables with Other Systems.~~

~~Installations shall comply with 300.10 .~~

~~**790.21** Access to Electrical Equipment Behind Panels Designed to Allow Access.~~

~~Installations shall comply with 300.26 .~~

~~**790.24** Mechanical Execution of Work.~~

~~**(A)** General.~~

~~The installation shall conform to 300.6 and 300.13 .~~

~~*Exception: Overhead (aerial) spans of communications drop wires, communications cables, and CATV-type coaxial cables shall be permitted to be attached to the exterior of a raceway-type mast intended for the attachment and support of such wires and cables.*~~

~~Informational Note No. 1: See ANSI/NECA/FOA 301-2016, *Standard for Installing and Testing Fiber Optic Cables* , ANSI/TIA-568.0-D-2015, *Generic Telecommunications Cabling for Customer Premises* , and ANSI/TIA 568.3-D-2016, *Optical Fiber Cabling and Components Standard* , for accepted industry practices.~~

~~Informational Note No. 2: See ANSI/BICSI N1-2019, *Installation Practices for Telecommunications and IC Cabling and Related Cabling Infrastructure* , ANSI/TIA-568.1- E-2020, *Commercial Building Telecommunications Infrastructure Standard* , ANSI/TIA-569-E-2019, *Telecommunications Pathways and Spaces* , ANSI/TIA-570-C-2012, *Residential Telecommunications Infrastructure Standard* , ANSI/TIA-1005-A-2012, *Telecommunications Infrastructure Standard for Industrial Premises* , ANSI/ TIA-1179-A-2017, *Healthcare Facility Telecommunications Infrastructure Standard* , ANSI/TIA-4966-2014, *Telecommunications Infrastructure Standard for Educational Facilities* , and other ANSI-approved installation standards for accepted industry practices.~~

~~**(B)** Circuit Integrity (CI) Cable.~~

~~Circuit integrity (CI) cable shall be supported at a distance not exceeding 610 mm (24 in.). Cable shall be secured to the noncombustible surface of the building structure. Cable supports and fasteners shall be steel. Where fire alarm circuits are located within 2.1 m (7 ft) of the floor in accordance with 760.53(A)(1) and 794.220 , as applicable, the cable shall be fastened in an approved manner at intervals of not more than 450 mm (18 in.).~~

~~**790.25** Abandoned Cables.~~

~~The accessible portion of abandoned cables shall be removed. Where cables are identified for future use with a tag, the tag shall be of sufficient durability to withstand the environment involved.~~

~~**790.100** Installation of Conductors of Different Limited-Energy Circuits in the Same Cable, Enclosure, Cable Tray, Raceway, or Cable Routing Assembly.~~

~~Limited-energy cables shall be of a type indicated in Table 790.100 .~~

~~Informational Note: Class 1 cables, non-power-limited fire alarm cables, and network-powered broadband medium-power cables are not limited-energy cable types.~~

~~Table 790.100 Limited-Energy Cable Types~~

~~Application Cable Type Description Plenum limited-energy cables CMP Communications plenum cables - CATVP Community antenna television plenum cables - BLP Network-powered broadband communications low-power plenum cables - FPLP Power-limited fire alarm plenum cables - CL4P Class 4 plenum cables - CL3P Class 3 plenum cables - CL2P Class 2 plenum cables - OFNP Nonconductive optical fiber plenum cables - OFCP Conductive optical fiber plenum cables - - - Riser limited-energy cables CMR Communications riser cables - CATVR Community antenna television riser cables - BLR Network-powered broadband communications low-power riser cables - FPLR Power-limited fire alarm riser cables - CL4R Class 4 riser cables - CL3R Class 3 riser cables - CL2R Class 2 riser cables - OFNR Nonconductive optical fiber riser cables - OFCR Conductive optical fiber riser cables - - - General-purpose limited-energy cables CMG, CM Communications general-purpose cables - CATV Community antenna television general-purpose cables - BL Network-powered broadband communications low-power general-purpose cables - FPL Power-limited fire alarm general-purpose cables - CL4 Class 4 general-purpose cables - PLTG Power-limited tray cables - CL3 Class 3 general-purpose cables - CL2 Class 2 general-purpose cables - OFNG, OFN Nonconductive optical fiber general-purpose cables - OFCG, OFC Conductive optical fiber general-purpose cables - - - Limited-use limited-energy cables CMX Communications limited use cables - CATVX Community antenna television limited use cables - BLX Network-powered broadband communications low-power limited use cables - CL3X Class 3 limited use cables - CL2X Class 2 limited use cables - - - Specialty use limited-energy cables CMUC Under-carpet communications wires and cables~~

~~**(A)** General.~~

~~Unless prohibited by this section, plenum, riser, general-purpose, and limited-use limited-energy cables shall be permitted to be installed in the same raceway, cable tray, box, enclosure, or cable routing assembly. Installations shall comply with 790.100(B) through 790.100(H) :~~

~~**(B)** Two or More Class 2, Class 3, or Class 4 Circuits.~~

~~Conductors of two or more limited-energy circuits of the same class shall be permitted within the same limited-energy cable.~~

~~**(C)** Class 2, Class 3, and Class 4 Circuits with the Same Limited-Energy Cable.~~

~~**(1)** Class 3 Cables.~~

~~Class 2 circuits shall be permitted to use listed Class 3 cables.~~

~~**(2)** Dual-Listed Class 3/Class 4 Cables.~~

~~Class 2 and Class 3 circuits shall be permitted to use dual-listed Class 3/Class 4 cables.~~

~~**(D)** Class 2 and Class 3 Circuits with Communications Circuits.~~

~~**(1)** Communications Cables.~~

~~Conductors of one or more Class 2 or Class 3 circuits shall be permitted in the same cable with conductors of communications circuits. The cable shall be listed as a communications cable.~~

~~**(2)** Composite Cables.~~

~~Cables constructed of individually listed Class 2, Class 3, and communications cables under a common jacket shall be permitted to be classified and listed as communications cables. The fire resistance rating of the composite cable shall be determined by the combustion characteristics of the composite cable.~~

~~**(E)** Class 2, Class 3, or Class 4 Cables with Other Limited-Energy Cables.~~

~~**(1)** Limited-Use Cables.~~

~~Plenum, riser, general-purpose, and limited-use limited-energy cables shall be permitted in the same enclosure or raceway.~~

~~**(2)** Other Than Limited-Use Cables.~~

~~Plenum, riser, and general-purpose limited-energy cables shall be permitted in the same enclosure, cable tray, raceway, or cable routing assembly.~~

~~**(F)** Power-Limited Fire Alarm (PLFA) Circuits.~~

~~**(1)** Multiple PLFA Circuits.~~

~~Cable and conductors of two or more power-limited fire alarm circuits shall be permitted within the same cable, enclosure, cable tray, raceway, or cable routing assembly.~~

~~**(2)** With Network-Powered Broadband.~~

~~Low-power network-powered broadband communications circuits shall be permitted in the same enclosure, cable tray, raceway, or cable routing assembly with PLFA cables.~~

~~**(3)** With Class 2 Circuits.~~

~~Conductors of one or more Class 2 circuits shall be permitted within the same cable, enclosure, cable tray, raceway, or cable routing assembly with conductors of power-limited fire alarm circuits if the insulation of the Class 2 circuit conductors in the cable, enclosure, raceway, or cable routing assembly is at least that required by the power-limited fire alarm circuits.~~

~~**(4)** With Class 3 or Communications Circuits.~~

~~Cable and conductors of Class 3 and communications circuits shall be permitted within the same cable, enclosure, cable tray, raceway, or cable routing assembly with cables and conductors of power-limited fire alarm circuits.~~

~~**(5)** With Class 4 Circuits.~~

~~Class 4 circuits shall be permitted in the same cable with power-limited fire alarm circuits if the cable is dual-listed.~~

~~**(6)** Audio System Circuits and PLFA Circuits.~~

~~Audio system circuits described in 640.9(C) and installed using Class 2, Class 3, or Class 4 wiring methods in compliance with 794.135 shall not be installed in the same cable, cable tray, raceway, or cable routing assembly with PLFA circuits or cables.~~

~~**(G)** Manholes.~~

~~Outside plant communications, CATV, and optical fiber cables shall be permitted to be installed together in manholes.~~

~~Informational Note: See IEEE C2-2023, *National Electrical Safety Code* , Rules 323 and 341 for information on cable installation in manholes.~~

~~**(H)** Limited-Use and Under-Carpet Limited-Energy Cables.~~

~~Limited-use and under-carpet limited-energy cables shall not be installed in cable trays or cable routing assemblies.~~

~~**790.136** Limited-Energy Circuits with Electric Light, Power, Class 1, Non-Power-Limited Fire Alarm, and Medium-Power Network-Powered Broadband Communications Circuits in Raceways, Compartments, and Boxes.~~

~~Separation shall be provided in accordance with 790.136(A) for limited-energy cables and conductors, except as provided in 790.136(B) for optical fiber cables.~~

~~**(A)** General.~~

~~Limited-energy cables shall be separated by at least 50 mm (2 in.) from conductors of any electric light, power, Class 1, non-power-limited fire alarm, or medium-power network-powered broadband communications circuits and shall not be placed in the same raceway, compartment, enclosure, manhole, outlet box, device box, or similar, unless permitted by 790.136(A)(1) through 790.136(A)(10) :~~

~~*Exception: Low-power and medium-power network-powered broadband communications circuit cables shall be permitted in the same raceway, cable tray, box, enclosure, or cable routing assembly.*~~

~~**(1)** Separated by Barriers.~~

~~Limited-energy cables shall be permitted to be placed in any raceway, compartment, outlet box, junction box, or other enclosures with conductors of electric light, power, Class 1, non-power-limited fire alarm, or medium-power network-powered broadband communications circuits if the conductors of electric light, power, Class 1, non-power-limited fire alarm, and medium-power network-powered broadband communications circuits are separated from the limited-energy and cables by a permanent barrier that maintains the 50 mm (2 in.) separation or a listed divider.~~

~~**(2)** Raceways Within Enclosures.~~

~~Limited-energy cables shall be permitted to share the same enclosure with other systems if the limited-energy cables are separated by a raceway within the enclosure.~~

~~**(3)** Associated Systems Within Enclosures.~~

~~Limited-energy cables shall be permitted to be placed in outlet boxes, junction boxes, compartments, or similar with power conductors where such conductors are introduced solely for power supply to the limited-energy equipment and installed in accordance with 790.136(A)(3)(a) or 790.136(A)(3)(b) :~~

(1) ~~The power circuit conductors shall be routed within the enclosure to maintain a minimum 6 mm (0.25 in.) separation from the limited-energy cables.~~

(2) ~~The circuit conductors shall operate at 150 volts or less to ground, and the limited-energy circuit conductors shall be one of the following:~~

(3) ~~Installed as a Class 1 circuit~~

(4) ~~Cable type CL3, CL3R, CL3P, or a permitted substitute with the conductors that emerge from the cable jacket separated by not less than 6 mm (0.25 in.) or by a nonconductive barrier from all other conductors~~

~~**(4)** Enclosures With a Single Opening.~~

~~Circuit conductors of limited-energy cables entering compartments, enclosures, device boxes, outlet boxes, or similar shall be permitted to be installed with Class 1, non-power-limited fire alarm, and medium-power network-powered broadband communications circuits where they are introduced solely to connect the equipment connected to the limited-energy circuits. If the limited-energy circuit conductors must enter an enclosure that is provided with a single opening, the conductors shall be permitted to enter through a single fitting (such as a tee) if the conductors are separated from the conductors of the other circuits by a continuous and firmly fixed nonconductor, such as flexible tubing.~~

~~**(5)** Elevators.~~

(a) ~~*Traveling Cables.* Separation of circuits shall not be required in elevator traveling cables constructed in accordance with 620.36 :~~

(b) ~~*Hoistways.* In hoistways, cables shall be installed in rigid metal conduit, rigid nonmetallic conduit, intermediate metal conduit, liquid-tight flexible nonmetallic conduit, or electrical metallic tubing. For elevators or similar equipment, these conductors shall be permitted to be installed as provided in 620.21 :~~

~~**(6)** In Raceways or Cables.~~

~~Separation shall not be required if one of the following conditions is met:~~

(1) ~~The conductors of electric light, power, Class 1, non-power-limited fire alarm, and medium-power network-powered broadband communications circuits are in a raceway or in metal-sheathed, metal-clad, nonmetallic-sheathed, Type AC, or Type UF cables~~

(2) ~~The limited-energy cable conductors are installed in a raceway or in metal-sheathed, metal-clad, nonmetallic-sheathed, Type TC, or Type UF cables.~~

~~**(7)** Protected by Firmly Fixed Nonconductors.~~

~~Separation shall not be required if the limited-energy cables are permanently separated from the conductors of electric light, power, Class 1, non-power-limited fire alarm, and medium-power network-powered broadband communications circuits by a continuous and firmly fixed nonconductor, such as porcelain tubes or flexible tubing, in addition to the insulation on the wire.~~

~~**(8)** Manholes.~~

~~Underground limited-energy circuit conductors and cables in a manhole shall be permitted to be installed with Class 1, non-power-limited fire alarm, and medium-power network-powered broadband communications circuits if one of the following conditions is met:~~

(1) ~~The electric light, power, Class 1, non-power-limited fire alarm, and medium-power network-powered broadband communications circuit conductors are in a metal-enclosed cable or Type UF cable.~~

(2) ~~The limited-energy circuit conductors are permanently and effectively separated from the conductors of other circuits by a continuous and firmly fixed nonconductor, such as flexible tubing, in addition to the insulation or covering on the wire.~~

(3) ~~The limited-energy circuit conductors are permanently and effectively separated from conductors of the other circuits and securely fastened to racks, insulators, or other approved supports.~~

~~**(9)** Cable Trays.~~

~~Limited-energy circuit conductors shall be permitted to be installed in cable trays if the conductors of the electric light, Class 1, and non-power-limited fire alarm circuits are separated by a solid fixed barrier of a material compatible with the cable tray or if the limited-energy circuits are installed in Type MC cable.~~

~~**(10)** If Protected.~~

~~Limited-energy circuits shall be permitted to be installed together with the conductors of electric light, power, Class 1, non-power-limited fire alarm, and medium-power network-powered broadband communications circuits if they are functionally associated and installed using Class 1 wiring methods in accordance with 724.46.~~

~~**(B)** Optical Fiber Cables.~~

~~Hybrid optical fiber cables shall be classified as electrical cables in accordance with the type of electrical conductors. They shall be constructed, listed, marked, and installed in accordance with the appropriate article for each type of electrical cable.~~

~~**(1)** Optical Fiber Cables in Cable Trays and Raceways with Electrical Circuits.~~

(a) ~~Conductive optical fiber cables contained in an armored or metal-clad-type sheath and nonconductive optical fiber cables shall be permitted to occupy the same cable tray or raceway with conductors for electric light, power, Class 1, non-power-limited fire alarm, Type ITC, or medium-power network-powered broadband communications circuits operating at 1000 volts or less.~~

(b) ~~Conductive optical fiber cables without an armored or metal-clad-type sheath shall not be permitted to occupy the same cable tray or raceway with conductors for electric light, power, Class 1, non-power-limited fire alarm, Type ITC, or medium-power network-powered broadband communications circuits, unless all of the conductors of electric light, power, Class 1, non-power-limited fire alarm, and medium-power network-powered broadband communications circuits are separated from all of the optical fiber cables by a permanent barrier or listed divider.~~

~~**(2)** Optical Fiber Cables in Cabinets, Outlet Boxes, and Similar Enclosures with electrical Circuits.~~

(a) ~~Nonconductive optical fiber cables shall not be permitted to occupy the same cabinet, outlet box, panel, or similar enclosure housing the electrical terminations of an electric light, power, Class 1, non-power-limited fire alarm, or medium-power network-powered broadband communications circuit unless one or more of the following conditions are met:~~

(2) ~~The nonconductive optical fiber cables are functionally associated with the electric light, power, Class 1, non-power-limited fire alarm, or medium-power network-powered broadband communications circuit.~~

(3) ~~The conductors for electric light, power, Class 1, non-power-limited fire alarm, Type ITC, or medium-power network-powered broadband communications circuits operate at 1000 volts or less.~~

(4) ~~The nonconductive optical fiber cables and the electrical terminations of electric light, power, Class 1, non-power-limited fire alarm, or medium-power network-powered broadband communications circuit are installed in factory- or field-assembled control centers.~~

(5) ~~The nonconductive optical fiber cables are installed in an industrial establishment where conditions of maintenance and supervision ensure that only qualified persons service the installation.~~

(f) ~~When optical fibers are within the same hybrid cable for electric light, power, Class 1, non-power-limited fire alarm, or medium-power network-powered broadband communications circuits operating at 1000 volts or less, they shall be permitted to be installed only where the functions of the optical fibers and the electrical conductors are associated.~~

(g) ~~Optical fibers in hybrid optical fiber cables containing only current-carrying conductors for electric light, power, or Class 1 circuits rated 1000 volts or less shall be permitted to occupy the same cabinet, cable tray, outlet box, panel, raceway, or other termination enclosure with conductors for electric light, power, or Class 1 circuits operating at 1000 volts or less.~~

(h) ~~Optical fibers in hybrid optical fiber cables containing current-carrying conductors for electric light, power, or Class 1 circuits rated over 1000 volts shall be permitted to occupy the same cabinet, cable tray, outlet box, panel, raceway, or other termination enclosure with conductors for electric light, power, or Class 1 circuits in industrial establishments, where conditions of maintenance and supervision ensure that only qualified persons service the installation.~~

DELETE ARTICLE 790

-

Statement of Problem and Substantiation for Public Comment

Article 790 is redundant. It covers the same requirements as Article 720.

Related Public Comments for This Document

Related Comment	Relationship
Public Comment No. 125-NFPA 70-2024 [Article 794]	Deletes redundant Article.
Public Comment No. 768-NFPA 70-2024 [Article 770]	Deletes redundant Article.
Public Comment No. 125-NFPA 70-2024 [Article 794]	
Public Comment No. 768-NFPA 70-2024 [Article 770]	

Related Item

- Global FR-8610

Submitter Information Verification

Submitter Full Name: David Kiddoo
Organization: CCCA
Affiliation: Communications Cable & Connectivity Association
Street Address:
City:
State:
Zip:

Submittal Date: Sat Jul 20 07:26:03 EDT 2024
Committee: NEC-P03

Public Comment No. 1793-NFPA 70-2024 [Article 790]

~~Article 790~~ Article 890 General Requirements for Limited-Energy Systems

~~790~~ 890 .1 Scope.

This article covers general requirements for limited-energy systems. These general requirements apply to Class 2 and Class 3 power limited circuits, Class 4 fault-managed power systems, power limited fire alarm circuits, and optical fiber cables covered by Articles 725, 726, 760, and 770 and communications systems covered by Articles 800, 805, 810, 820, 830, and 840.

~~790~~ 890 .4 Other Articles.

Only those sections of Article 300 referenced in this article shall apply.

790.5 Hazardous (Classified) Locations.

Cables and equipment shall be permitted to be used in hazardous (classified) locations where specifically permitted by other articles of this code.

790.6 Spread of Fire or Products of Combustion.

Installation of power-limited circuits shall comply with 300.23.

790.7 Ducts, Plenums, and Other Air-Handling Spaces.

Circuits installed in ducts, plenums, or other space used for environmental air shall comply with 300.25.

Exception No. 1: Cables selected in accordance with Table 794.135(A) and installed in accordance with 300.25(B), Exception shall be permitted to be installed in ducts specifically fabricated for environmental air.

Exception No. 2: Cables selected in accordance with Table 794.135(A) shall be permitted to be installed in other spaces used for environmental air (plenums).

Exception No. 3: Power-limited fire alarm cables selected in accordance with Table 794.157 and installed in accordance with 794.135 and 300.25(B) Exception shall be permitted to be installed in ducts specifically fabricated for environmental air.

Exception No. 4: Power-limited fire alarm cables selected in accordance with Table 794.157 and installed in accordance with 794.135 shall be permitted to be installed in other spaces used for environmental air (plenums).

790.8 Installation of Conductors and Cables with Other Systems.

Installations shall comply with 300.10.

790.21 Access to Electrical Equipment Behind Panels Designed to Allow Access.

Installations shall comply with 300.26.

790.24 Mechanical Execution of Work.

(A) General.

The installation shall conform to 300.6 and 300.13.

Exception: Overhead (aerial) spans of communications drop wires, communications cables, and CATV-type coaxial cables shall be permitted to be attached to the exterior of a raceway-type mast intended for the attachment and support of such wires and cables.

Informational Note No. 1: See ANSI/NECA/FOA 301-2016, *Standard for Installing and Testing Fiber Optic Cables*, ANSI/TIA-568.0-D-2015, *Generic Telecommunications Cabling for Customer Premises*, and ANSI/TIA 568.3-D-2016, *Optical Fiber Cabling and Components Standard*, for accepted industry practices.

Informational Note No. 2: See ANSI/BICSI N1-2019, *Installation Practices for Telecommunications and IC Cabling and Related Cabling Infrastructure*, ANSI/TIA-568.1- E-2020, *Commercial Building Telecommunications Infrastructure Standard*, ANSI/TIA-569-E-2019, *Telecommunications Pathways and Spaces*, ANSI/TIA-570-C-2012, *Residential Telecommunications Infrastructure Standard*, ANSI/TIA-1005-A-2012, *Telecommunications Infrastructure Standard for Industrial Premises*, ANSI/ TIA-1179-A-2017, *Healthcare Facility Telecommunications Infrastructure Standard*, ANSI/TIA-4966-2014, *Telecommunications Infrastructure Standard for Educational Facilities*, and other ANSI-approved installation standards for accepted industry practices.

(B) Circuit Integrity (CI) Cable.

Circuit integrity (CI) cable shall be supported at a distance not exceeding 610 mm (24 in.). Cable shall be secured to the noncombustible surface of the building structure. Cable supports and fasteners shall be steel. Where fire alarm circuits are located within 2.1 m (7 ft) of the floor in accordance with 760.53(A)(1) and 794.220, as applicable, the cable shall be fastened in an approved manner at intervals of not more than 450 mm (18 in.).

790.25 Abandoned Cables.

The accessible portion of abandoned cables shall be removed. Where cables are identified for future use with a tag, the tag shall be of sufficient durability to withstand the environment involved.

790.100 Installation of Conductors of Different Limited-Energy Circuits in the Same Cable, Enclosure, Cable Tray, Raceway, or Cable Routing Assembly.

Limited-energy cables shall be of a type indicated in Table 790.100.

Informational Note: Class 1 cables, non-power-limited fire alarm cables, and network-powered broadband medium-power cables are not limited-energy cable types.

Table 790.100 Limited-Energy Cable Types

Application	Cable Type	Description	
Plenum limited-energy cables	CMP	Communications plenum cables	
	-	CATVP	Community antenna television plenum cables
	-	BLP	Network-powered broadband communications low-power plenum cables
	-	FPLP	Power-limited fire alarm plenum cables
	-	CL4P	Class 4 plenum cables
	-	CL3P	Class 3 plenum cables
	-	CL2P	Class 2 plenum cables
	-	OFNP	Nonconductive optical fiber plenum cables
	-	OFCP	Conductive optical fiber plenum cables
-	-	-	
Riser limited-energy cables	CMR	Communications riser cables	
	-	CATVR	Community antenna television riser cables
	-	BLR	Network-powered broadband communications low-power riser cables
	-	FPLR	Power-limited fire alarm riser cables
	-	CL4R	Class 4 riser cables
	-	CL3R	Class 3 riser cables
	-	CL2R	Class 2 riser cables
	-	OFNR	Nonconductive optical fiber riser cables
	-	OFCR	Conductive optical fiber riser cables
-	-	-	
General-purpose limited-energy cables	CMG, CM	Communications general-purpose cables	
	-	CATV	Community antenna television general-purpose cables
	-	BL	Network-powered broadband communications low-power general-purpose cables
	-	FPL	Power-limited fire alarm general-purpose cables
	-	CL4	Class 4 general-purpose cables
	-	PLTC	Power-limited tray cables
	-	CL3	Class 3 general-purpose cables
	-	CL2	Class 2 general-purpose cables
	-	OFNG, OFN	Nonconductive optical fiber general-purpose cables
	-	OFCG, OFC	Conductive optical fiber general-purpose cables
-	-	-	
Limited-use limited-energy cables	CMX	Communications limited use cables	
	-	CATVX	Community antenna television limited use cables
	-	BLX	Network-powered broadband communications low-power limited use cables
	-	CL3X	Class 3 limited use cables
	-	CL2X	Class 2 limited use cables
-	-	-	
Specialty use limited-energy cables	CMUC	Under-carpet communications wires and cables	

(A) General.

Unless prohibited by this section, plenum, riser, general-purpose, and limited-use limited-energy cables shall be permitted to be installed in the same raceway, cable tray, box, enclosure, or cable routing assembly. Installations shall comply with 790.100(B) through 790.100(H).

(B) Two or More Class 2, Class 3, or Class 4 Circuits.

Conductors of two or more limited-energy circuits of the same class shall be permitted within the same limited-energy cable.

(C) Class 2, Class 3, and Class 4 Circuits with the Same Limited-Energy Cable.

(1) Class 3 Cables.

Class 2 circuits shall be permitted to use listed Class 3 cables.

(2) Dual-Listed Class 3/Class 4 Cables.

Class 2 and Class 3 circuits shall be permitted to use dual-listed Class 3/Class 4 cables.

(D) Class 2 and Class 3 Circuits with Communications Circuits.

(1) Communications Cables.

Conductors of one or more Class 2 or Class 3 circuits shall be permitted in the same cable with conductors of communications circuits. The cable shall be listed as a communications cable.

(2) Composite Cables.

Cables constructed of individually listed Class 2, Class 3, and communications cables under a common jacket shall be permitted to be classified and listed as communications cables. The fire resistance rating of the composite cable shall be determined by the combustion characteristics of the composite cable.

(E) Class 2, Class 3, or Class 4 Cables with Other Limited-Energy Cables.

(1) Limited-Use Cables.

Plenum, riser, general-purpose, and limited-use limited-energy cables shall be permitted in the same enclosure or raceway.

(2) Other Than Limited-Use Cables.

Plenum, riser, and general-purpose limited-energy cables shall be permitted in the same enclosure, cable tray, raceway, or cable routing assembly.

(F) Power-Limited Fire Alarm (PLFA) Circuits.

(1) Multiple PLFA Circuits.

Cable and conductors of two or more power-limited fire alarm circuits shall be permitted within the same cable, enclosure, cable tray, raceway, or cable routing assembly.

(2) With Network-Powered Broadband.

Low-power network-powered broadband communications circuits shall be permitted in the same enclosure, cable tray, raceway, or cable routing assembly with PLFA cables.

(3) With Class 2 Circuits.

Conductors of one or more Class 2 circuits shall be permitted within the same cable, enclosure, cable tray, raceway, or cable routing assembly with conductors of power-limited fire alarm circuits if the insulation of the Class 2 circuit conductors in the cable, enclosure, raceway, or cable routing assembly is at least that required by the power-limited fire alarm circuits.

(4) With Class 3 or Communications Circuits.

Cable and conductors of Class 3 and communications circuits shall be permitted within the same cable, enclosure, cable tray, raceway, or cable routing assembly with cables and conductors of power-limited fire alarm circuits.

(5) With Class 4 Circuits.

Class 4 circuits shall be permitted in the same cable with power-limited fire alarm circuits if the cable is dual-listed.

(6) Audio System Circuits and PLFA Circuits.

Audio system circuits described in 640.9(C) and installed using Class 2, Class 3, or Class 4 wiring methods in compliance with 794.135 shall not be installed in the same cable, cable tray, raceway, or cable routing assembly with PLFA circuits or cables.

(G) Manholes.

Outside plant communications, CATV, and optical fiber cables shall be permitted to be installed together in manholes.

Informational Note: See IEEE C2-2023, *National Electrical Safety Code*, Rules 323 and 341 for information on cable installation in manholes.

(H) Limited-Use and Under-Carpet Limited-Energy Cables.

Limited-use and under-carpet limited-energy cables shall not be installed in cable trays or cable routing assemblies.

790.136 Limited-Energy Circuits with Electric Light, Power, Class 1, Non-Power-Limited Fire Alarm, and Medium-Power Network-Powered Broadband Communications Circuits in Raceways, Compartments, and Boxes.

Separation shall be provided in accordance with 790.136(A) for limited-energy cables and conductors, except as provided in 790.136(B) for optical fiber cables.

(A) General.

Limited-energy cables shall be separated by at least 50 mm (2 in.) from conductors of any electric light, power, Class 1, non-power-limited fire alarm, or medium-power network-powered broadband communications circuits and shall not be placed in the same raceway, compartment, enclosure, manhole, outlet box, device box, or similar, unless permitted by 790.136(A)(1) through 790.136(A)(10).

Exception: Low-power and medium-power network-powered broadband communications circuit cables shall be permitted in the same raceway, cable tray, box, enclosure, or cable routing assembly.

(1) Separated by Barriers.

Limited-energy cables shall be permitted to be placed in any raceway, compartment, outlet box, junction box, or other enclosures with conductors of electric light, power, Class 1, non-power-limited fire alarm, or medium-power network-powered broadband communications circuits if the conductors of electric light, power, Class 1, non-power-limited fire alarm, and medium-power network-powered broadband communications circuits are separated from the limited-energy and cables by a permanent barrier that maintains the 50 mm (2 in.) separation or a listed divider.

(2) Raceways Within Enclosures.

Limited-energy cables shall be permitted to share the same enclosure with other systems if the limited-energy cables are separated by a raceway within the enclosure.

(3) Associated Systems Within Enclosures.

Limited-energy cables shall be permitted to be placed in outlet boxes, junction boxes, compartments, or similar with power conductors where such conductors are introduced solely for power supply to the limited-energy equipment and installed in accordance with 790.136(A)(3)(a) or 790.136(A)(3)(b).

(a) The power circuit conductors shall be routed within the enclosure to maintain a minimum 6 mm (0.25 in.) separation from the limited-energy cables.

(b) The circuit conductors shall operate at 150 volts or less to ground, and the limited-energy circuit conductors shall be one of the following:

(3) Installed as a Class 1 circuit

(4) Cable type CL3, CL3R, CL3P, or a permitted substitute with the conductors that emerge from the cable jacket separated by not less than 6 mm (0.25 in.) or by a nonconductive barrier from all other conductors

(4) Enclosures With a Single Opening.

Circuit conductors of limited-energy cables entering compartments, enclosures, device boxes, outlet boxes, or similar shall be permitted to be installed with Class 1, non-power-limited fire alarm, and medium-power network-powered broadband communications circuits where they are introduced solely to connect the equipment connected to the limited-energy circuits. If the limited-energy circuit conductors must enter an enclosure that is provided with a single opening, the conductors shall be permitted to enter through a single fitting (such as a tee) if the conductors are separated from the conductors of the other circuits by a continuous and firmly fixed nonconductor, such as flexible tubing.

(5) Elevators.

(a) *Traveling Cables.* Separation of circuits shall not be required in elevator traveling cables constructed in accordance with 620.36.

(b) *Hoistways.* In hoistways, cables shall be installed in rigid metal conduit, rigid nonmetallic conduit, intermediate metal conduit, liquid-tight flexible nonmetallic conduit, or electrical metallic tubing. For elevators or similar equipment, these conductors shall be permitted to be installed as provided in 620.21.

(6) In Raceways or Cables.

Separation shall not be required if one of the following conditions is met:

(1) The conductors of electric light, power, Class 1, non-power-limited fire alarm, and medium-power network-powered broadband communications circuits are in a raceway or in metal-sheathed, metal-clad, nonmetallic-sheathed, Type AC, or Type UF cables

(2) The limited-energy cable conductors are installed in a raceway or in metal-sheathed, metal-clad, nonmetallic-sheathed, Type TC, or Type UF cables.

(7) Protected by Firmly Fixed Nonconductors.

Separation shall not be required if the limited-energy cables are permanently separated from the conductors of electric light, power, Class 1, non-power-limited fire alarm, and medium-power network-powered broadband communications circuits by a continuous and firmly fixed nonconductor, such as porcelain tubes or flexible tubing, in addition to the insulation on the wire.

(8) Manholes.

Underground limited-energy circuit conductors and cables in a manhole shall be permitted to be installed with Class 1, non-power-limited fire alarm, and medium-power network-powered broadband communications circuits if one of the following conditions is met:

(1) The electric light, power, Class 1, non-power-limited fire alarm, and medium-power network-powered broadband communications circuit conductors are in a metal-enclosed cable or Type UF cable.

(2) The limited-energy circuit conductors are permanently and effectively separated from the conductors of other circuits by a continuous and firmly fixed nonconductor, such as flexible tubing, in addition to the insulation or covering on the wire.

(3) The limited-energy circuit conductors are permanently and effectively separated from conductors of the other circuits and securely fastened to racks, insulators, or other approved supports.

(9) Cable Trays.

Limited-energy circuit conductors shall be permitted to be installed in cable trays if the conductors of the electric light, Class 1, and non-power-limited fire alarm circuits are separated by a solid fixed barrier of a material compatible with the cable tray or if the limited-energy circuits are installed in Type MC cable.

(10) If Protected.

Limited-energy circuits shall be permitted to be installed together with the conductors of electric light, power, Class 1, non-power-limited fire alarm, and medium-power network-powered broadband communications circuits if they are functionally associated and installed using Class 1 wiring methods in accordance with 724.46.

(B) Optical Fiber Cables.

Hybrid optical fiber cables shall be classified as electrical cables in accordance with the type of electrical conductors. They shall be constructed, listed, marked, and installed in accordance with the appropriate article for each type of electrical cable.

(1) Optical Fiber Cables in Cable Trays and Raceways with Electrical Circuits.

(a) Conductive optical fiber cables contained in an armored or metal-clad-type sheath and nonconductive optical fiber cables shall be permitted to occupy the same cable tray or raceway with conductors for electric light, power, Class 1, non-power-limited fire alarm, Type ITC, or medium-power network-powered broadband communications circuits operating at 1000 volts or less.

(b) Conductive optical fiber cables without an armored or metal-clad-type sheath shall not be permitted to occupy the same cable tray or raceway with conductors for electric light, power, Class 1, non-power-limited fire alarm, Type ITC, or medium-power network-powered broadband communications circuits, unless all of the conductors of electric light, power, Class 1, non-power-limited fire alarm, and medium-power network-powered broadband communications circuits are separated from all of the optical fiber cables by a permanent barrier or listed divider.

(2) Optical Fiber Cables in Cabinets, Outlet Boxes, and Similar Enclosures with electrical Circuits.

(a) Nonconductive optical fiber cables shall not be permitted to occupy the same cabinet, outlet box, panel, or similar enclosure housing the electrical terminations of an electric light, power, Class 1, non-power-limited fire alarm, or medium-power network-powered broadband communications circuit unless one or more of the following conditions are met:

(2) The nonconductive optical fiber cables are functionally associated with the electric light, power, Class 1, non-power-limited fire alarm, or medium-power network-powered broadband communications circuit.

(3) The conductors for electric light, power, Class 1, non-power-limited fire alarm, Type ITC, or medium-power network-powered broadband communications circuits operate at 1000 volts or less.

(4) The nonconductive optical fiber cables and the electrical terminations of electric light, power, Class 1, non-power-limited fire alarm, or medium-power network-powered broadband communications circuit are installed in factory- or field-assembled control centers.

(5) The nonconductive optical fiber cables are installed in an industrial establishment where conditions of maintenance and supervision ensure that only qualified persons service the installation.

(f) When optical fibers are within the same hybrid cable for electric light, power, Class 1, non-power-limited fire alarm, or medium-power network-powered broadband communications circuits operating at 1000 volts or less, they shall be permitted to be installed only where the functions of the optical fibers and the electrical conductors are associated.

(g) Optical fibers in hybrid optical fiber cables containing only current-carrying conductors for electric light, power, or Class 1 circuits rated 1000 volts or less shall be permitted to occupy the same cabinet, cable tray, outlet box, panel, raceway, or other termination enclosure with conductors for electric light, power, or Class 1 circuits operating at 1000 volts or less.

(h) Optical fibers in hybrid optical fiber cables containing current-carrying conductors for electric light, power, or Class 1 circuits rated over 1000 volts shall be permitted to occupy the same cabinet, cable tray, outlet box, panel, raceway, or other termination enclosure with conductors for electric light, power, or Class 1 circuits in industrial establishments, where conditions of maintenance and supervision ensure that only qualified persons service the installation.

Statement of Problem and Substantiation for Public Comment

Because this code is to protect people and property this section should be moved to an independent chapter 8. The previous chapters should only apply where referenced. Intrinsically safe cabling, power limited cabling and fiber optic cabling do not pose a threat to ignite fires or harm people or property. There is no

justification for keeping this section in chapter 7 and excellent reasons to move it to chapter 8. In the 21st century delivery of communications and limited energy are increasingly important to everyone. by removing the burden of added inspections, licensing and permitting construction costs can be reduced. Locating this section in this chapter does not foster the growth necessary in this century.

Related Item

• Article 720

Submitter Information Verification

Submitter Full Name: Patrick Mahoney
Organization: AECOM
Street Address:
City:
State:
Zip:

Submittal Date: Tue Aug 27 11:49:16 EDT 2024
Committee: NEC-P03

Public Comment No. 539-NFPA 70-2024 [Article 790]

Article 790 General Requirements for Limited-Energy Systems

790.1 Scope.

This article covers general requirements for limited-energy systems. These general requirements apply to Class 2 and Class 3 power limited circuits, Class 4 fault-managed power systems, power limited fire alarm circuits, and optical fiber cables covered by Articles 725, 726, 760, and 770 and communications systems covered by Articles 800, 805, 810, 820, 830, and 840.

790.4 Other Articles.

Only those sections of Article 300 referenced in this article shall apply.

790.5 Hazardous (Classified) Locations.

Cables and equipment shall be permitted to be used in hazardous (classified) locations where specifically permitted by other articles of this code.

790.6 Spread of Fire or Products of Combustion.

Installation of power-limited circuits shall comply with 300.23.

790.7 Ducts, Plenums, and Other Air-Handling Spaces.

Circuits installed in ducts, plenums, or other space used for environmental air shall comply with 300.25.

Exception No. 1: Cables selected in accordance with Table 794.135(A) and installed in accordance with 300.25(B), Exception shall be permitted to be installed in ducts specifically fabricated for environmental air.

Exception No. 2: Cables selected in accordance with Table 794.135(A) shall be permitted to be installed in other spaces used for environmental air (plenums).

Exception No. 3: Power-limited fire alarm cables selected in accordance with Table 794.157 and installed in accordance with 794.135 and 300.25(B) Exception shall be permitted to be installed in ducts specifically fabricated for environmental air.

Exception No. 4: Power-limited fire alarm cables selected in accordance with Table 794.157 and installed in accordance with 794.135 shall be permitted to be installed in other spaces used for environmental air (plenums).

790.8 Installation of Conductors and Cables with Other Systems.

Installations shall comply with 300.10.

790.21 Access to Electrical Equipment Behind Panels Designed to Allow Access.

Installations shall comply with 300.26.

790.24 Mechanical Execution of Work.

(A) General.

The installation shall conform to 300.6 and 300.13.

Exception: Overhead (aerial) spans of communications drop wires, communications cables, and CATV-type coaxial cables shall be permitted to be attached to the exterior of a raceway-type mast intended for the attachment and support of such wires and cables.

Informational Note No. 1: See ANSI/NECA/FOA 301-2016, *Standard for Installing and Testing Fiber Optic Cables*, ANSI/TIA-568.0-D-2015, *Generic Telecommunications Cabling for Customer Premises*, and ANSI/TIA 568.3-D-2016, *Optical Fiber Cabling and Components Standard*, for accepted industry practices.

Informational Note No. 2: See ANSI/BICSI N1-2019, *Installation Practices for Telecommunications and IC Cabling and Related Cabling Infrastructure*, ANSI/TIA-568.1- E-2020, *Commercial Building Telecommunications Infrastructure Standard*, ANSI/TIA-569-E-2019, *Telecommunications Pathways and Spaces*, ANSI/TIA-570-C-2012, *Residential Telecommunications Infrastructure Standard*, ANSI/TIA-1005-A-2012, *Telecommunications Infrastructure Standard for Industrial Premises*, ANSI/ TIA-1179-A-2017, *Healthcare Facility Telecommunications Infrastructure Standard*, ANSI/TIA-4966-2014, *Telecommunications Infrastructure Standard for Educational Facilities*, and other ANSI-approved installation standards for accepted industry practices.

(B) Circuit Integrity (CI) Cable.

Circuit integrity (CI) cable shall be supported at a distance not exceeding 610 mm (24 in.). Cable shall be secured to the noncombustible surface of the building structure. Cable supports and fasteners shall be steel. Where fire alarm circuits are located within 2.1 m (7 ft) of the floor in accordance with 760.53(A)(1) and 794.220, as applicable, the cable shall be fastened in an approved manner at intervals of not more than 450 mm (18 in.).

790.25 Abandoned Cables.

The accessible portion of abandoned cables shall be removed. Where cables are identified for future use with a tag, the tag shall be of sufficient durability to withstand the environment involved.

790.100 Installation of Conductors of Different Limited-Energy Circuits in the Same Cable, Enclosure, Cable Tray, Raceway, or Cable Routing Assembly.

Limited-energy cables shall be of a type indicated in Table 790.100.

Informational Note: Class 1 cables, non-power-limited fire alarm cables, and network-powered broadband medium-power cables are not limited-energy cable types.

Table 790.100 Limited-Energy Cable Types

Application	Cable Type	Description
Plenum limited-energy cables	CMP	Communications plenum cables
	CATVP	Community antenna television plenum cables
	BLP	Network-powered broadband communications low-power plenum cables
	FPLP	Power-limited fire alarm plenum cables
	CL4P	Class 4 plenum cables
	CL3P	Class 3 plenum cables
	CL2P	Class 2 plenum cables
	OFNP	Nonconductive optical fiber plenum cables
	OFCP	Conductive optical fiber plenum cables
Riser limited-energy cables	CMR	Communications riser cables
	CATVR	Community antenna television riser cables
	BLR	Network-powered broadband communications low-power riser cables
	FPLR	Power-limited fire alarm riser cables
	CL4R	Class 4 riser cables
	CL3R	Class 3 riser cables
	CL2R	Class 2 riser cables
	OFNR	Nonconductive optical fiber riser cables
	OFCR	Conductive optical fiber riser cables
General-purpose limited-energy cables	CMG, CM	Communications general-purpose cables
	CATV	Community antenna television general-purpose cables
	BL	Network-powered broadband communications low-power general-purpose cables
	FPL	Power-limited fire alarm general-purpose cables
	CL4	Class 4 general-purpose cables
	PLTC	Power-limited tray cables
	CL3	Class 3 general-purpose cables
	CL2	Class 2 general-purpose cables
	OFNG, OFN	Nonconductive optical fiber general-purpose cables
	OFCG, OFC	Conductive optical fiber general-purpose cables
Limited-use limited-energy cables	CMX	Communications limited use cables
	CATVX	Community antenna television limited use cables
	BLX	Network-powered broadband communications low-power limited use cables
	CL3X	Class 3 limited use cables
	CL2X	Class 2 limited use cables
Specialty use limited-energy cables	CMUC	Under-carpet communications wires and cables

(A) General.

Unless prohibited by this section, plenum, riser, general-purpose, and limited-use limited-energy cables shall be permitted to be installed in the same raceway, cable tray, box, enclosure, or cable routing assembly. Installations shall comply with 790.100(B) through 790.100(H).

(B) Two or More Class 2, Class 3, or Class 4 Circuits.

Conductors of two or more limited-energy circuits of the same class shall be permitted within the same limited-energy cable.

(C) Class 2, Class 3, and Class 4 Circuits with the Same Limited-Energy Cable.

(1) Class 3 Cables.

Class 2 circuits shall be permitted to use listed Class 3 cables.

(2) Dual-Listed Class 3/Class 4 Cables.

Class 2 and Class 3 circuits shall be permitted to use dual-listed Class 3/Class 4 cables.

(D) Class 2 and Class 3 Circuits with Communications Circuits.

(1) Communications Cables.

Conductors of one or more Class 2 or Class 3 circuits shall be permitted in the same cable with conductors of communications circuits. The cable shall be listed as a communications cable.

(2) Composite Cables.

Cables constructed of individually listed Class 2, Class 3, and communications cables under a common jacket shall be permitted to be classified and listed as communications cables. The fire resistance rating of the composite cable shall be determined by the combustion characteristics of the composite cable.

(E) Class 2, Class 3, or Class 4 Cables with Other Limited-Energy Cables.

(1) Limited-Use Cables.

Plenum, riser, general-purpose, and limited-use limited-energy cables shall be permitted in the same enclosure or raceway.

(2) Other Than Limited-Use Cables.

Plenum, riser, and general-purpose limited-energy cables shall be permitted in the same enclosure, cable tray, raceway, or cable routing assembly.

(F) Power-Limited Fire Alarm (PLFA) Circuits.

(1) Multiple PLFA Circuits.

Cable and conductors of two or more power-limited fire alarm circuits shall be permitted within the same cable, enclosure, cable tray, raceway, or cable routing assembly.

(2) With Network-Powered Broadband.

Low-power network-powered broadband communications circuits shall be permitted in the same enclosure, cable tray, raceway, or cable routing assembly with PLFA cables.

(3) With Class 2 Circuits.

Conductors of one or more Class 2 circuits shall be permitted within the same cable, enclosure, cable tray, raceway, or cable routing assembly with conductors of power-limited fire alarm circuits if the insulation of the Class 2 circuit conductors in the cable, enclosure, raceway, or cable routing assembly is at least that required by the power-limited fire alarm circuits.

(4) With Class 3 or Communications Circuits.

Cable and conductors of Class 3 and communications circuits shall be permitted within the same cable, enclosure, cable tray, raceway, or cable routing assembly with cables and conductors of power-limited fire alarm circuits.

(5) With Class 4 Circuits.

Class 4 circuits shall be permitted in the same cable with power-limited fire alarm circuits if the cable is dual-listed.

(6) Audio System Circuits and PLFA Circuits.

Audio system circuits described in 640.9(C) and installed using Class 2, Class 3, or Class 4 wiring methods in compliance with 794.135 shall not be installed in the same cable, cable tray, raceway, or cable routing assembly with PLFA circuits or cables.

(G) Manholes.

Outside plant communications, CATV, and optical fiber cables shall be permitted to be installed together in manholes.

Informational Note: See IEEE C2-2023, *National Electrical Safety Code*, Rules 323 and 341 for information on cable installation in manholes.

(H) Limited-Use and Under-Carpet Limited-Energy Cables.

Limited-use and under-carpet limited-energy cables shall not be installed in cable trays or cable routing assemblies.

790.136 Limited-Energy Circuits with Electric Light, Power, Class 1, Non-Power-Limited Fire Alarm, and Medium-Power Network-Powered Broadband Communications Circuits in Raceways, Compartments, and Boxes.

Separation shall be provided in accordance with 790.136(A) for limited-energy cables and conductors, except as provided in 790.136(B) for optical fiber cables.

(A) General.

Limited-energy cables shall be separated by at least 50 mm (2 in.) from conductors of any electric light, power, Class 1, non-power-limited fire alarm, or medium-power network-powered broadband communications circuits and shall not be placed in the same raceway, compartment, enclosure, manhole, outlet box, device box, or similar, unless permitted by 790.136(A)(1) through 790.136(A)(10).

Exception: Low-power and medium-power network-powered broadband communications circuit cables shall be permitted in the same raceway, cable tray, box, enclosure, or cable routing assembly.

(1) Separated by Barriers.

Limited-energy cables shall be permitted to be placed in any raceway, compartment, outlet box, junction box, or other enclosures with conductors of electric light, power, Class 1, non-power-limited fire alarm, or medium-power network-powered broadband communications circuits if the conductors of electric light, power, Class 1, non-power-limited fire alarm, and medium-power network-powered broadband communications circuits are separated from the limited-energy and cables by a permanent barrier that maintains the 50 mm (2 in.) separation or a listed divider.

(2) Raceways Within Enclosures.

Limited-energy cables shall be permitted to share the same enclosure with other systems if the limited-energy cables are separated by a raceway within the enclosure.

(3) Associated Systems Within Enclosures.

Limited-energy cables shall be permitted to be placed in outlet boxes, junction boxes, compartments, or similar with power conductors where such conductors are introduced solely for power supply to the limited-energy equipment and installed in accordance with 790.136(A)(3)(a) or 790.136(A)(3)(b).

(a) The power circuit conductors shall be routed within the enclosure to maintain a minimum 6 mm (0.25 in.) separation from the limited-energy cables.

(b) The circuit conductors shall operate at 150 volts or less to ground, and the limited-energy circuit conductors shall be one of the following:

(1) Installed as a Class 1 circuit

(2) Cable type CL3, CL3R, CL3P, or a permitted substitute with the conductors that emerge from the cable jacket separated by not less than 6 mm (0.25 in.) or by a nonconductive barrier from all other conductors

(4) Enclosures With a Single Opening.

Circuit conductors of limited-energy cables entering compartments, enclosures, device boxes, outlet boxes, or similar shall be permitted to be installed with Class 1, non-power-limited fire alarm, and medium-power network-powered broadband communications circuits where they are introduced solely to connect the equipment connected to the limited-energy circuits. If the limited-energy circuit conductors must enter an enclosure that is provided with a single opening, the conductors shall be permitted to enter through a single fitting (such as a tee) if the conductors are separated from the conductors of the other circuits by a continuous and firmly fixed nonconductor, such as flexible tubing.

(5) Elevators.

(a) *Traveling Cables.* Separation of circuits shall not be required in elevator traveling cables constructed in accordance with 620.36.

(b) *Hoistways.* In hoistways, cables shall be installed in rigid metal conduit, rigid nonmetallic conduit, intermediate metal conduit, liquid-tight flexible nonmetallic conduit, or electrical metallic tubing. For elevators or similar equipment, these conductors shall be permitted to be installed as provided in 620.21.

(6) In Raceways or Cables.

Separation shall not be required if one of the following conditions is met:

(1) The conductors of electric light, power, Class 1, non-power-limited fire alarm, and medium-power network-powered broadband communications circuits are in a raceway or in metal-sheathed, metal-clad, nonmetallic-sheathed, Type AC, or Type UF cables

(2) The limited-energy cable conductors are installed in a raceway or in metal-sheathed, metal-clad, nonmetallic-sheathed, Type TC, or Type UF cables.

(7) Protected by Firmly Fixed Nonconductors.

Separation shall not be required if the limited-energy cables are permanently separated from the conductors of electric light, power, Class 1, non-power-limited fire alarm, and medium-power network-powered broadband communications circuits by a continuous and firmly fixed nonconductor, such as porcelain tubes or flexible tubing, in addition to the insulation on the wire.

(8) Manholes.

Underground limited-energy circuit conductors and cables in a manhole shall be permitted to be installed with Class 1, non-power-limited fire alarm, and medium-power network-powered broadband communications circuits if one of the following conditions is met:

(1) The electric light, power, Class 1, non-power-limited fire alarm, and medium-power network-powered broadband communications circuit conductors are in a metal-enclosed cable or Type UF cable.

(2) The limited-energy circuit conductors are permanently and effectively separated from the conductors of other circuits by a continuous and firmly fixed nonconductor, such as flexible tubing, in addition to the insulation or covering on the wire.

(3) The limited-energy circuit conductors are permanently and effectively separated from conductors of the other circuits and securely fastened to racks, insulators, or other approved supports.

(9) Cable Trays.

Limited-energy circuit conductors shall be permitted to be installed in cable trays if the conductors of the electric light, Class 1, and non-power-limited fire alarm circuits are separated by a solid fixed barrier of a material compatible with the cable tray or if the limited-energy circuits are installed in Type MC cable.

(10) If Protected.

Limited-energy circuits shall be permitted to be installed together with the conductors of electric light, power, Class 1, non-power-limited fire alarm, and medium-power network-powered broadband communications circuits if they are functionally associated and installed using Class 1 wiring methods in accordance with 724.46.

(B) Optical Fiber Cables.

Hybrid optical fiber cables shall be classified as electrical cables in accordance with the type of electrical conductors. They shall be constructed, listed, marked, and installed in accordance with the appropriate article for each type of electrical cable.

(1) Optical Fiber Cables in Cable Trays and Raceways with Electrical Circuits.

(a) Conductive optical fiber cables contained in an armored or metal-clad-type sheath and nonconductive optical fiber cables shall be permitted to occupy the same cable tray or raceway with conductors for electric light, power, Class 1, non-power-limited fire alarm, Type ITC, or medium-power network-powered broadband communications circuits operating at 1000 volts or less.

(b) Conductive optical fiber cables without an armored or metal-clad-type sheath shall not be permitted to occupy the same cable tray or raceway with conductors for electric light, power, Class 1, non-power-limited fire alarm, Type ITC, or medium-power network-powered broadband communications circuits, unless all of the conductors of electric light, power, Class 1, non-power-limited fire alarm, and medium-power network-powered broadband communications circuits are separated from all of the optical fiber cables by a permanent barrier or listed divider.

(2) Optical Fiber Cables in Cabinets, Outlet Boxes, and Similar Enclosures with electrical Circuits.

(a) Nonconductive optical fiber cables shall not be permitted to occupy the same cabinet, outlet box, panel, or similar enclosure housing the electrical terminations of an electric light, power, Class 1, non-power-limited fire alarm, or medium-power network-powered broadband communications circuit unless one or more of the following conditions are met:

(1) The nonconductive optical fiber cables are functionally associated with the electric light, power, Class 1, non-power-limited fire alarm, or medium-power network-powered broadband communications circuit.

(2) The conductors for electric light, power, Class 1, non-power-limited fire alarm, Type ITC, or medium-power network-powered broadband communications circuits operate at 1000 volts or less.

(3) The nonconductive optical fiber cables and the electrical terminations of electric light, power, Class 1, non-power-limited fire alarm, or medium-power network-powered broadband communications circuit are installed in factory- or field-assembled control centers.

(4) The nonconductive optical fiber cables are installed in an industrial establishment where conditions of maintenance and supervision ensure that only qualified persons service the installation.

(b) When optical fibers are within the same hybrid cable for electric light, power, Class 1, non-power-limited fire alarm, or medium-power network-powered broadband communications circuits operating at 1000 volts or less, they shall be permitted to be installed only where the functions of the optical fibers and the electrical conductors are associated.

(c) Optical fibers in hybrid optical fiber cables containing only current-carrying conductors for electric light, power, or Class 1 circuits rated 1000 volts or less shall be permitted to occupy the same cabinet, cable tray, outlet box, panel, raceway, or other termination enclosure with conductors for electric light, power, or Class 1 circuits operating at 1000 volts or less.

(d) Optical fibers in hybrid optical fiber cables containing current-carrying conductors for electric light, power, or Class 1 circuits rated over 1000 volts shall be permitted to occupy the same cabinet, cable tray, outlet box, panel, raceway, or other termination enclosure with conductors for electric light, power, or Class 1 circuits in industrial establishments, where conditions of maintenance and supervision ensure that only qualified persons service the installation.

Additional Proposed Changes

File Name	Description	Approved
CN_415.pdf		

Statement of Problem and Substantiation for Public Comment

NOTE: The following CC Note No. 415 appeared in the First Draft Report.

The Correlating Committee directs CMP 3 to delete Article 790 for correlation. New Article 720 was developed by the Correlating Committee Limited-Energy Task Group and included in

the First Draft Report through a first correlating revision. A single article containing general requirements for all the limited-energy and communications installations is made possible with the removal of the Chapter 8 independence in Section
90.3 through a CMP 1 first revision. The CC is forming a task group to review the first draft revisions to the limited energy requirements and provide additional guidance through public comments to CMPs 3 and 16.

Related Item

• Correlating Committee No. 415

Submitter Information Verification

Submitter Full Name: CC Notes
Organization: NEC Correlating Committee
Street Address:
City:
State:
Zip:

Submittal Date: Tue Jul 30 23:33:01 EDT 2024
Committee: NEC-P03

Correlating Committee Note No. 415-NFPA 70-2024 [Article 790]

Submitter Information Verification

Committee: NEC-AAC
Submittal Date: Tue May 21 13:50:22 EDT 2024

Committee Statement

Committee Statement: The Correlating Committee directs CMP 3 to delete Article 790 for correlation. New Article 720 was developed by the Correlating Committee Limited-Energy Task Group and included in the First Draft Report through a first correlating revision. A single article containing general requirements for all the limited-energy and communications installations is made possible with the removal of the Chapter 8 independence in Section 90.3 through a CMP 1 first revision. The CC is forming a task group to review the first draft revisions to the limited energy requirements and provide additional guidance through public comments to CMPs 3 and 16.

Ballot Results

✔ **This item has passed ballot**

12 Eligible Voters
1 Not Returned
11 Affirmative All
0 Affirmative with Comments
0 Negative with Comments
0 Abstention

Not Returned

McDaniel, Roger D.

Affirmative All

Ayer, Lawrence S.
Bowmer, Trevor N.
Hickman, Palmer L.
Holub, Richard A.
Jackson, Peter D.
Kendall, David H.
Manche, Alan
Osborne, Robert D.
Porter, Christine T.
Schultheis, Timothy James

Williams, David A.

Public Comment No. 125-NFPA 70-2024 [Article 794]

Article 794 Limited-Energy Cables for Power-Limited Circuits, Fault-Managed Power Circuits, Optical Fiber Circuits, and Communications Circuits

Part I. General.

794.1 Scope.

This article covers the general requirements for the installation of single- and multiple-conductor cables used in Class 2 and Class 3 power-limited circuits, power-limited fire alarm (PLFA) circuits, Class 4 fault-managed power circuits, optical fiber cables, and communications systems power-limited, remote-control and signaling circuits that are not an integral part of a device or utilization equipment. The circuits described herein are characterized by usage and electrical power limitations that differentiate them from electric light and power circuits; therefore, alternative requirements are given regarding minimum wire sizes, ampacity adjustment and correction factors, overcurrent protection, insulation requirements, and wiring methods and materials. The installation of fire alarm systems covers wiring and equipment including all circuits controlled and powered by the fire alarm system. The general requirements for communications systems apply to communications circuits, community antenna television and radio distribution systems, network-powered broadband communications systems, and premises-powered broadband communications systems, unless modified by Articles 805, 810, 820, 830, or 840.

Informational Note No. 1: See 206.4 for classifications of remote-control and signaling circuits.

Informational Note No. 2: Class 4 fault-managed power systems consist of a Class 4 power transmitter and a Class 4 power receiver connected by a Class 4 cabling system. These systems are characterized by monitoring the circuit for faults and controlling the source current to ensure the energy delivered into any fault is limited. Class 4 systems differ from Class 1, Class 2, and Class 3 systems in that they are not limited for power delivered to an appropriate load. They are current limited for faults between the Class 4 transmitter and Class 4 receiver.

Informational Note No. 3: Fire alarm systems include fire detection and alarm notification, guard's tour, sprinkler waterflow, and sprinkler supervisory systems. Circuits controlled and powered by the fire alarm system include circuits for the control of building systems safety functions, elevator capture, elevator shutdown, door release, smoke doors and damper control, fire doors and damper control, and fan shutdown, but only where these circuits are powered by and controlled by the fire alarm system.

Informational Note No. 4: See *NFPA 72* -2025, *National Fire Alarm and Signaling Code* , for further information on the installation and monitoring for integrity requirements for fire alarm systems.

794.2 Listing and Marking of Cables.

Cables installed in buildings shall be listed in accordance with 794.2(A) and marked in accordance with 794.2(B) , and they shall be permitted to be marked in accordance with 794.2(C) :

Exception: Optical fiber cables that are installed in compliance with 800.48 shall not be required to be listed.

(A) Listing of Cables.

Cables installed as wiring methods within buildings shall be listed as resistant to the spread of fire and other criteria in accordance with 794.2(A)(1) through 794.2(A)(16) :

Informational Note No. 1: See UL 13, *Standard for Power-Limited Circuit Cables* , for applicable requirements for listing of Class 2 and Class 3 cable and power-limited tray cable (PLTC).

Informational Note No. 2: See UL 1424, *Cables for Power-Limited Fire-Alarm Circuits* , for applicable requirements for listing of power-limited fire alarm cable.

Informational Note No. 3: See UL 1651, *Optical Fiber Cable* , for applicable requirements for listing of optical fiber cable.

Informational Note No. 4: See UL 1400-2-2023, *Outline of Investigation for Fault-Managed Power Systems — Part 2: Requirements for Class 4 Cables* , for applicable requirements for listing of Class 4 cable.

(1) Plenum Cable.

Plenum cable shall be listed as suitable for use in ducts, plenums, and other space for environmental air and shall be listed as having adequate fire-resistant and low-smoke producing characteristics. Plenum cable types shall be identified in Table 794.2(B) :

Informational Note: See NFPA 262-2023, *Standard Method of Test for Flame Travel and Smoke of Wires and Cables for Use in Air-Handling Spaces* , for the test method used to determine that a cable is low-smoke producing and fire resistant, exhibiting a maximum peak optical density of 0.50 or less, an average optical density of 0.15 or less, and a maximum flame spread distance of 1.52 m (5 ft) or less.

(2) Riser Cable.

Riser cable shall be listed as suitable for use in a vertical run in a shaft or from floor to floor and shall be listed as having fire-resistant characteristics capable of preventing the carrying of fire from floor to floor.

Informational Note: See ANSI/UL 1666-2012, *Test for Flame Propagation Height of Electrical and Optical-Fiber Cable Installed Vertically in Shafts* , for the cable requirements defining fire-resistant characteristics capable of preventing the carrying of fire from floor to floor.

(3) General-Purpose Cable.

General-purpose cable shall be listed as resistant to the spread of fire and as suitable for general-purpose use, except for use in risers, ducts, plenums, and other space used for environmental air.

Informational Note: See UL 2556, *Wire and Cable Test Methods* , for defining *resistant to the spread of fire* . One method is to demonstrate that the cables do not spread fire to the top of the tray in the UL Flame Exposure, Vertical Tray Flame Test. The smoke measurements in the test method are not applicable.

A method of defining *resistant to the spread of fire* is for the damage (char length) not to exceed 1.5 m (4 ft 11 in.) when performing the FT4 Vertical Flame Test.

(4) Alternative General-Purpose Cable.

Alternative general-purpose optical fiber cable shall be listed as suitable for general-purpose use, with the exception of risers and plenums, and shall also be resistant to the spread of fire.

Informational Note: See CSA C22.2 No. 0.3-M-2001, *Test Methods for Electrical Wires and Cables* , for the CSA vertical flame test — cables in cable trays, that can also be used to define resistance to the spread of fire when the damage (char length) does not exceed 1.5 m (4 ft 11 in.).

(5) Limited-Use Cable.

Limited-use cable shall be listed as suitable for use in dwellings and raceways and shall be listed as resistant to flame spread.

Informational Note: See ANSI/UL 2556, *Standard for Wire and Cable Test Methods,* for one method of determining that cable is resistant to flame spread by testing the cable to the FV-2/VW-1 test.

(6) Type PLTC.

Type PLTC nonmetallic-sheathed, power-limited tray cable shall be listed as being suitable for cable trays, resistant to the spread of fire, and sunlight- and moisture-resistant. Type PLTC cable used in a wet location shall be listed for use in wet locations and marked "wet" or "wet location."

Informational Note: See ANSI/UL 1685-2010, *Standard for Safety for Vertical-Tray Fire-Propagation and Smoke-Release Test for Electrical and Optical-Fiber Cables* , for the UL flame exposure, vertical tray flame test that is used to determine resistance to the spread of fire when cables do not spread fire to the top of the tray. The smoke measurements in the test method are not applicable.

See CSA C22.2 No. 0.3-M-2001, *Test Methods for Electrical Wires and Cables* , for the CSA vertical flame test — cables in cable trays that can also be used to define *resistance to the spread of fire* when the damage (char length) does not exceed 1.5 m (4 ft 11 in.).

(7) Circuit Integrity (CI) Cable, Fire-Resistive Cable System, or Electrical Circuit Protective System.

Cables that are used for survivability of critical circuits under fire conditions shall comply with either 794.2(A)(7)(a) , 794.2(A)(7)(b) , or 794.2(A)(7)(c) .

Informational Note: See *NFPA 72* -2025, *National Fire Alarm and Signaling Code* , 12.4.3 and 12.4.4 for additional information on fire alarm CI cable, fire-resistive cable systems, or electrical circuit protective systems used for fire alarm circuits to comply with the survivability requirements to maintain the circuit's electrical function during fire conditions for a defined period of time.

(a) *CI Cables* . CI cables of the types specified in 794.2(A)(1) , 794.2(A)(2) , 794.2(A)(3) , 794.2(A)(4) , and 794.2(A)(6) and used for survivability of critical circuits shall be marked with the additional classification using the suffix "CI." To maintain its listed fire-resistive rating, CI cable shall only be installed in free air in accordance with 722.24(B). CI cables shall only be permitted to be installed in a raceway where specifically listed and marked as part of a fire-resistive cable system as covered in 794.2(A)(7)(b) .

Informational Note: See UL 2196, *Fire Test for Circuit Integrity of Fire-Resistive Power, Instrumentation, Control and Data Cables,* and UL 1425, *Cables for Non–Power-Limited Fire-Alarm Circuits* , for information on establishing a rating for CI cable. The *UL Guide Information for Nonpower-limited Fire Alarm Circuits* (FNHT) contains information to identify the cable and its installation limitations to maintain the fire-resistive rating.

(b) *Fire-Resistive Cables* . Fire-resistive cables of the types specified in 794.2(A)(1) , 794.2(A)(2) , 794.2(A)(3) , 794.2(A)(4) , 794.2(A)(6) , and 794.2(A)(7)(a) that are part of a fire-resistive cable system shall be identified with the system identifier and hourly rating marked on the protectant or the smallest unit container and installed in accordance with the listing of the system.

Informational Note: See UL 2196, *Fire Test for Circuit Integrity of Fire-Resistive Power, Instrumentation, Control and Data Cables* , for information on establishing a rating for a fire-resistive cable system. The *UL Guide Information for Electrical Circuit Integrity Systems* (FHIT) contains information to identify the system and its installation limitations to maintain a minimum fire-resistive rating.

(c) *Electrical Circuit Protective System* . Protectants for cables of the types specified in 794.2(A)(1) , 794.2(A)(2) , 794.2(A)(3) , 794.2(A)(4) , and 794.2(A)(6) , that are part of an electrical circuit protective system shall be identified with the protective system identifier and hourly rating marked on the protectant or the smallest unit container and installed in accordance with the listing of the protective system.

Informational Note: See UL 1724, *Fire Tests for Electrical Circuit Protective Systems,* for information on establishing a rating for an electrical circuit protective system. The *UL Guide Information for Electrical Circuit Integrity Systems* (FHIT) contains information to identify the system and its installation limitations to maintain the fire-resistive rating.

(8) Class 3 Single Conductors.

Class 3 single conductors used as other wiring within buildings shall be listed Type CL3 and shall not be smaller than 18 AWG.

Informational Note: See ANSI/UL 1685-2010, *Standard for Safety for Vertical-Tray Fire-Propagation and Smoke-Release Test for Electrical and Optical-Fiber Cables* , for the UL flame exposure, vertical tray flame test that is used to determine *resistance to the spread of fire* when cables do not spread fire to the top of the tray. The smoke measurements in the test method are not applicable.

See CSA C22.2 No. 0.3-M-2001, *Test Methods for Electrical Wires and Cables* , for the CSA vertical flame test — cables in cable trays that can also be used to define *resistance to the spread of fire* when the damage (char length) does not exceed 1.5 m (4 ft 11 in.).

(9) Limited Power (LP) Cable.

Class 2 and Class 3 LP cables shall be listed as suitable for carrying power and data up to a specified current limit for each conductor without exceeding the temperature rating of the cable. The cables shall be marked with the suffix "-LP (XXA)" where XXA designates the current limit in amperes per conductor.

Informational Note: An example of the marking on 23 AWG, 4-pair, Class 2 cable rated 75°C (167°F) with an LP current rating of 0.6 amperes per conductor is "CL2-LP (0.6A) 75°C 23 AWG 4-pair."

(10) Under-Carpet Cables.

Undercarpet cable shall be listed as suitable for use under carpet, floor covering, modular tiles, and planks.

Informational Note: See UL 444, *Standard for Safety for Communications Cables* , for the compressive loading test used to determine the suitability of cable for under-carpet use.

(11) Wet Locations.

Cable used in a wet location shall be listed for use in wet locations and be marked "wet" or "wet location" or have a moisture-impervious metal sheath.

(12) Field-Assembled Optical Fiber Cables.

Field-assembled optical fiber cable shall comply with 794.2(A)(12)(a) through 794.2(A)(12)(d) .

(1) The specific combination of jacket and optical fibers intended to be installed as a field-assembled optical fiber cable shall be one of the types in 794.2(A)(1) , 794.2(A)(2) , or 794.2(A)(3) , and shall be marked in accordance with Table 794.2(B) .

(2) The jacket of a field-assembled optical fiber cable shall have a surface marking indicating the specific optical fibers with which it is identified for use.

(3) The optical fibers shall have a permanent marking, such as a marker tape, indicating the jacket with which they are identified for use.

(4) The jacket without fibers shall meet the listing requirements for communications raceways in 800.182(A), 800.182(B), or 800.182(C) in accordance with the cable marking.

(13) Cables Containing Optical Fibers.

Hybrid optical fiber cables shall be listed as electrical cables based on the type of electrical conductors.

(14) Class 2 and Class 3 Cable Voltage and Temperature Ratings.

Class 2 cables shall have a voltage rating of not less than 150 volts. Class 3 cables shall have a voltage rating of not less than 300 volts. Class 2 and Class 3 cables shall have a temperature rating of not less than 60°C (140°F).

(15) Power-Limited Fire Alarm (PLFA) Cables.

PLFA cables shall comply with 794.2(A)(15)(a) through 794.2(A)(15)(d) :

(a) Conductors for cables, other than coaxial cables, shall be solid or stranded copper. Coaxial cables shall be permitted to use 30 percent conductivity copper-covered steel center conductor wire.

(b) The size of conductors in a multiconductor cable shall not be smaller than 26 AWG. Single conductors shall not be smaller than 18 AWG. Conductors of 26 AWG shall be permitted only where spliced with a connector listed as suitable for 26 AWG to 24 AWG or larger conductors that are terminated on equipment or where the 26 AWG conductors are terminated on equipment listed as suitable for 26 AWG conductors.

(c) The size of conductors in a multiconductor cable shall not be smaller than 26 AWG. Single conductors shall not be smaller than 18 AWG. Conductors of 26 AWG shall be permitted only where spliced with a connector listed as suitable for 26 AWG to 24 AWG or larger conductors that are terminated on equipment or where the 26 AWG conductors are terminated on equipment listed as suitable for 26 AWG conductors.

(d) Cables shall have a temperature rating of not less than 60°C (140°F).

(16) Class 4 Cable Construction.

(a) *Sizes.* Conductors of sizes not smaller than 24 AWG shall be permitted to be used.

(b) *Insulation.* Insulation on conductors shall be rated not less than 450 volts dc.

(c) *Voltage Rating.* Cables shall have a voltage rating of not less than 450 bolts dc. Voltage ratings shall not be marked on the cables.

(d) *Temperature Rating.* Cables shall have a temperature rating of not less than 60°C (140°F).

(B) Marking.

Cables shall be durably marked on the surface in accordance with the following:

(1) The AWG size or circular mil area shall be repeated at intervals not exceeding 610 mm (24 in.).

(2) All other markings shall be repeated at intervals not exceeding 1.0 m (40 in.).

(3) The proper type designation for the type of cable shall be marked in accordance with Table 794.2(B) :

(4) The manufacturer's name, trademark, or other distinctive marking by which the organization responsible for the product can be readily identified shall be marked.

(5) The AWG size or circular mil area shall be marked.

Informational Note No. 1: See Chapter 9, Table 8 for conductor area expressed in SI units for conductor sizes specified in AWG or circular mil area.

(6) The temperature rating for a temperature rating exceeding 60°C (140°F) shall be marked.

Informational Note No. 2: A minimum temperature rating of 60°C (140°F) is assumed for cables not marked with a temperature rating.

(7) Voltage ratings shall not be marked on the cables.

Exception: If the cable has multiple listings and a voltage marking is required for one or more of the listings, voltage ratings shall be marked on the cable.

Informational Note No. 3: Voltage markings on cables could be misinterpreted to suggest that the cables may be suitable for Class 1 electric light and power applications.

Informational Note No. 4: Cable types are listed in descending order of fire resistance rating.

(8) Metallic conductor cables containing optical fibers shall be marked with the suffix "-OF".

Table 794.2(B) Cable Type Markings

Cable Type Cable Marking Class 4 plenum cable CL4P Class 3 plenum cable CL3P Class 2 plenum cable CL2P Power-limited fire alarm plenum cable FPLP Nonconductive optical fiber plenum cable OFNP Conductive optical fiber plenum cable OFCP Class 4 riser cable CL4R Class 3 riser cable CL3R Class 2 riser cable CL2R Power-limited fire alarm riser cable FPLR Nonconductive optical fiber riser cable OFNR Conductive optical fiber riser cable OFCR Class 4 general-purpose cable CL4 Class 3 general-purpose cable CL3 Class 2 general-purpose cable CL2 Class 4 outdoor-only use cable CL4Z Power-limited fire alarm cable FPL Nonconductive general-purpose optical fiber cable OFN Conductive general-purpose optical fiber cable OFC Alternative nonconductive general-purpose optical fiber cable OFNG Alternative conductive general-purpose optical fiber cable OFCG Class 3 cable — limited use CL3X Class 2 cable — limited use CL2X Under-carpet cable CMUC

Note: All types of CL2, CL3, CL4, and FPL cables containing optical fibers are provided with the suffix "-OF."

(C) Optional Markings.

Cables shall be permitted to be surface marked to indicate special characteristics of the cable materials.

Informational Note No. 1: Examples of these characteristics include, but are not limited to, limited smoke, halogen free, low smoke and halogen free, and sunlight resistant.

Informational Note No. 2: Some examples of optional markings are ST1 to indicate limited smoke characteristics. See UL 2556, *Wire and Cable Test Methods* , HF to indicate halogen free. See in UL 2885, *Outline of Investigation for Acid Gas, Acidity and Conductivity of Combusted Materials* , and LSHF to indicate halogen free and low-smoke characteristics. See IEC 61034-2, *Measurement of smoke density of cables burning under defined conditions — Part 2: Test procedure and requirements* .

794.4 Other Articles.

In addition to the requirements of this article, installation of cables shall comply with the articles or sections listed in 794.4(A) through 794.4(L) . Only those sections of Article 300 referenced in this article shall apply.

(A) Installation of Cables and Conductors in Raceway.

The number and size of conductors and cables, as well as raceway sizing, shall comply with 300.19 .

(B) Cables in Ducts for Dust, Loose Stock, or Vapor Removal.

Section 300.25(A) for wiring systems shall apply.

~~**(C)** Cable Trays.~~

~~Cable tray installations shall comply with Article 392, Parts I and II.~~

~~**(D)** Instrumentation Tray Cable.~~

~~Circuits wired using instrumentation tray cable shall comply with 335.1 and 335.10 through 335.90 :~~

~~**(E)** Raceways or Sleeves Exposed to Different Temperatures.~~

~~Section 300.9(A) shall apply.~~

~~**(F)** Vertical Support for Fire-Resistive Cables and Conductors.~~

~~Vertical installations of circuit integrity (CI) cables and conductors installed in a raceway or conductors and cables of electrical circuit protective systems and fire-resistive-cable systems shall be installed in accordance with 300.21 :~~

~~**(G)** Corrosive, Damp, or Wet Locations.~~

~~The installation of power-limited cables installed in corrosive, damp, or wet locations shall comply with 110.11 , 300.7(B) , 300.8 , 300.11 , and 310.10(F) :~~

~~**(H)** Cable Routing Assemblies.~~

~~Cables installed in cable routing assemblies shall be selected in accordance with Table 800.154(c), listed in accordance with 800.182, and installed in accordance with 800.110(C)(1), 800.110(C)(2), and 800.113.~~

~~**(I)** Communications Raceways.~~

~~Cable communications raceways shall be selected in accordance with Table 800.154(b), listed in accordance with 800.182, and installed in accordance with 800.113 and 362.24 through 362.56, where the requirements applicable to electrical nonmetallic tubing (ENT) apply.~~

~~**(J)** Temperature Limitation of Cables.~~

~~The requirements of 310.14(A)(3) on the temperature limitation of conductors shall apply to power-limited circuit cables and fault-managed power cables.~~

~~**(K)** Identification of Equipment Grounding Conductors.~~

~~Equipment grounding conductors shall be identified in accordance with 250.119 :~~

~~*Exception No. 1: Cables that do not contain an equipment grounding conductor shall be permitted to use a conductor with green insulation, or green insulation with one or more yellow stripes, for other than equipment grounding purposes.*~~

~~*Exception No. 2: Conductors with green insulation shall be permitted to be used as ungrounded signal conductors for Types FPLP, FPLR, FPL, and substitute cables installed in accordance with 760.154(A).*~~

~~**(L)** Specific Requirements.~~

~~As appropriate, the installation of wires and cables shall also comply with the following:~~

(1) ~~Class 2 and Class 3 cables: Article 725~~

(2) ~~Class 4 cables: Article 726, Part IV of Article 726~~

(3) ~~Fire alarm cables: Article 760, Part III of Article 760~~

(4) ~~Optical fiber cables: Article 770, Part V~~

~~**794.12** Uses Not Permitted.~~

~~Class 4 cables shall not be permitted for any applications that are not part of a Class 4 system.~~

~~*Exception: Use of Class 4 cable for other applications shall be permitted if the cable has been listed as suitable for the other applications.*~~

~~**794.27** Temperature Limitation of Optical Fiber Cables.~~

~~Optical fiber cable shall not be used in such a manner that its operating temperature exceeds that of its rating.~~

~~**794.31** Safety-Control Equipment.~~

~~Where damage to power-limited circuits can result in a failure of safety-control equipment that would introduce a direct fire or life hazard, all conductors of such circuits shall be installed in rigid metal conduit, intermediate metal conduit, rigid nonmetallic conduit, electrical metallic tubing, Type MI cable, or Type MC cable, or be protected from physical damage. Room thermostats, water temperature regulating devices, and similar controls used in conjunction with electrically controlled household heating and air conditioning shall not be considered safety-control equipment.~~

~~**794.135** Installation of Cables.~~

~~The installation of cables shall comply with 794.135(A) through 794.135(I), as applicable.~~

~~**(A)** Cables in Buildings.~~

~~The installation of cables shall comply with Table 794.135(A) :~~

~~Table 794.135(A) Installation of Listed Cables in Buildings~~

~~- - Cable Type [1] Applications Plenum Riser General-Purpose Limited-Use Under Carpet PLTC In ducts specifically fabricated for environmental air as described in 300.25(B) [2] Cables in lengths as short as practicable to perform the required function Y N N N N N In metal raceway that complies with 300.25(B) Y Y Y Y N Y In other spaces used for environmental air (plenums) as described in 300.25(C) Cables in other spaces used for environmental air Y N N N N N Cables in metal raceway that complies with 300.25(C) Y Y Y Y N Y Cables in plenum communications raceways Y N N N N N Cables in plenum cable routing assemblies Y N N N N N Cables supported by open-metal cable trays Y N N N N N Cables or cables installed in raceways or cable routing assemblies supported by solid bottom metal cable trays with solid metal covers Y Y Y Y N Y In risers and vertical runs Cables in vertical runs penetrating one or more floors and in vertical runs in a shaft Y Y N N N N Cables in metal raceways Y Y Y Y N Y Cables in fireproof shafts Y Y Y N N Y Cables in plenum communications raceways Y Y N N N N Cables in plenum cable routing assemblies Y Y N N N N Cables in riser communications raceways Y Y N N N N Cables in riser cable routing assemblies Y Y N N N N Cables in one- and two-family dwellings Y Y Y Y [3] N Y Cables and innerducts installed in metal raceways in a riser having firestops at each floor [2] Cables Y Y Y Y N Y Cables in plenum communications raceways (innerduct) Y Y Y Y N Y Cables in riser communications raceways (innerduct) Y Y Y Y N Y Cables in general-purpose communications raceways (innerduct) Y Y Y Y N Y In fireproof riser shafts having firestops at each floor [2] Cables Y Y Y N N Y Cables in plenum communications raceways or plenum cable routing assemblies Y Y Y N N Y Cables in riser communications raceways or riser cable routing assemblies Y Y Y N N Y Cables in general-purpose communications raceways or general-purpose cable routing assemblies Y Y Y N N Y In cable trays Outdoors N N N N N Y Cables, or cables in plenum, riser, or general-purpose communications raceways, installed indoors Y Y Y N N Y In cross-connect arrays Cables, and cables in plenum, riser, or general-purpose communications raceways or cable routing assemblies Y Y Y N N Y In one-, two-, and multifamily dwellings, and in building locations other than the locations covered above Cables Y Y Y Y [3] N Y Cables in plenum, riser, or general-purpose communications raceways or cable routing assemblies, or raceways recognized in Chapter 3 Y Y Y Y N Y Cables in nonconcealed~~

~~spaces Y Y Y Y [4] Y Y - Under carpet, floor covering, modular flooring, and planks N N N N Y N~~

~~[1] "N" indicates that the cable type shall not be installed in the application. "Y" indicates that the cable type shall be permitted to be installed in the application, subject to any limitations described in this article or the articles described in 794.4(L).~~

~~[2] In 300.25(B), cables shall be permitted in ducts specifically fabricated for environmental air only if directly associated with the air distribution system.~~

~~[3] Limited-use cable shall be permitted to be installed only in one-, two-, and multifamily dwellings and only if the cable is smaller in diameter than 6.35 mm (0.25 in.).~~

~~[4] The exposed length of cable shall not exceed 3.05 m (10 ft).~~

~~Informational Note No. 1: See NFPA 90A-2024, *Standard for the Installation of Air-Conditioning and Ventilating Systems*, for information on fire protection of wiring installed in ducts specifically fabricated for environmental air and other spaces used for environmental air (plenums).~~

~~Informational Note No. 2: See 300.23 for firestop requirements for floor penetrations.~~

~~Informational Note No. 3: See Chapter 3 for the installation requirements for PLTC cables installed outdoors in cable trays.~~

~~Informational Note No. 4: See UL 2024, *Cable Routing Assemblies and Communications Raceways*, for applicable requirements for plenum, riser, and general-purpose cable routing assemblies and raceways.~~

~~**(B)** Industrial Establishments.~~

~~In industrial establishments where the conditions of maintenance and supervision ensure that only qualified persons service the installation, Type PLTC cable shall be permitted in accordance with either of the following:~~

(1) ~~Where the cable is not subject to physical damage, Type PLTC cable that complies with the crush and impact requirements of Type MC cable and is identified as Type PLTC-ER for such use shall be permitted to be exposed between the cable tray and the utilization equipment or device. The cable shall be continuously supported and protected against physical damage using mechanical protection such as dedicated struts, angles, or channels. The cable shall be supported and secured at intervals not exceeding 1.8 m (6 ft). Where not subject to physical damage, Type PLTC-ER cable shall be permitted to transition between cable trays and between cable trays and utilization equipment or devices for a distance not to exceed 1.8 m (6 ft) without continuous support. The cable shall be mechanically supported where exiting the cable tray to ensure that the minimum bending radius is not exceeded.~~

(2) ~~Type PLTC cable, with a metallic sheath or armor in accordance with 794.2(A)(6), shall be permitted to be installed exposed. The cable shall be continuously supported and protected against physical damage using mechanical protection such as dedicated struts, angles, or channels. The cable shall be secured at intervals not exceeding 1.8 m (6 ft).~~

~~**(C)** In Hoistways.~~

~~In hoistways, cables shall be installed in rigid metal conduit, rigid nonmetallic conduit, intermediate metal conduit, liquidtight flexible nonmetallic conduit, or electrical metallic tubing. For elevators or similar equipment, these conductors shall be permitted to be installed as provided in 620.21.~~

~~**(D)** Cable Substitutions.~~

~~The substitutions for cables listed in Table 794.135(D) and illustrated in Figure 794.135(D) shall be permitted. Where substitute cables are installed, the installation requirements of the articles described in 794.4(L) shall also apply. CI cables shall be permitted to be installed to provide 2-hour circuit integrity. See 794.160.~~

~~Informational Note: See 800.179 for information on Types CMP, CMR, CM, and CMX.~~

~~Table 794.135(D) Cable Substitutions~~

~~Cable Type Permitted Substitutions CL3P CMP CL2P CMP, CL3P CL3R CMP, CL3P, CMR CL2R CMP, CL3P, CL2P, CMR, CL3R PLTC None CL3 CMP, CL3P, CMR, CL3R, CMG, CM, PLTC CL2 CMP, CL3P, CL2P, CMR, CL3R, CL2R, CMG, CM, PLTC, CL3 CL3X CMP, CL3P, CMR, CL3R, CMG, CM, PLTC, CL3, CMX CL2X CMP, CL3P, CL2P, CMR, CL3R, CL2R, CMG, CM, PLTC, CL3, CL2, CMX, CL3X FPLP CMP FPLR CMP, FPLP, CMR FPL CMP, FPLP, CMR, FPLR, CMG, CM OFNP None OFCP OFNP OFNR OFNP OFCR OFNP, OFCP, OFNR OFNG, OFN OFNP, OFNR OFCG, OFC OFNP, OFCP, OFNR, OFCR, OFNG, OFN CMUC None~~

~~**Figure 794.135(D) Cable Substitution Hierarchy.**~~

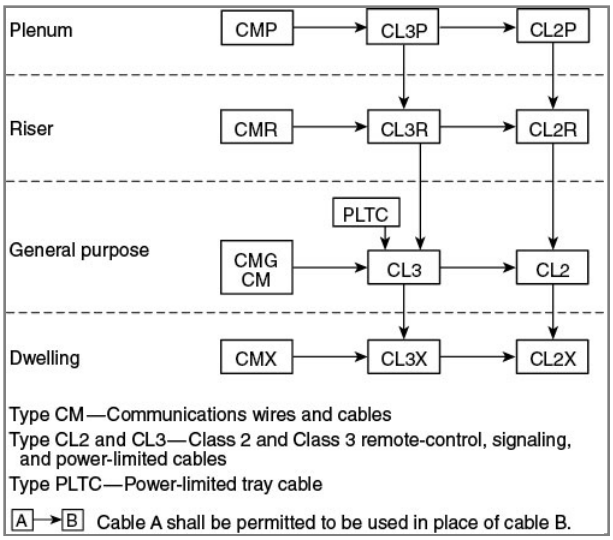

~~**794.154** Substitutions for Listed Communications Cables.~~

~~The substitutions for communications cables listed in Table 794.154 and illustrated in Figure 794.154 shall be permitted.~~

~~Table 794.154 Cable Substitutions~~

~~Cable Type Permitted Substitutions CMR CMP CMG, CM CMP, CMR CMX CMP, CMR, CMG, CM~~

~~**Figure 794.154 Cable Substitution Hierarchy.**~~

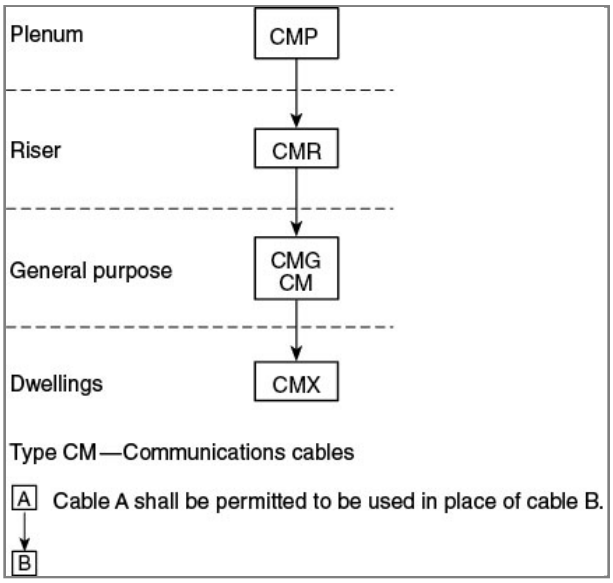

~~**794.155**~~ ~~Substitutions of Listed CATV Cables. Substitutions of Listed CATV Cables.~~
~~The substitutions for coaxial cables in~~ ~~Table 794.155~~ ~~and illustrated in~~ ~~Figure 794.155~~ ~~shall be permitted.~~

~~Informational Note:~~ ~~The substitute cables in~~ ~~Table 794.155~~ ~~and~~ ~~Figure 794.155~~ ~~are only coaxial-type cables.~~

~~Table 794.155 Coaxial Cable Uses and Permitted Substitutions~~

~~Cable Type Permitted Substitutions CATVP CMP, BLP CATVR CATVP, CMP, CMR, BMR, BLP, BLR CATV CATVP, CMP, CATVR, CMR, CMG, CM, BMR, BM, BLP, BLR, BL CATVX CATVP, CMP, CATVR, CMR, CATV, CMG, CM, BMR, BM, BLP, BLR, BL, BLX~~

~~**Figure 794.155 Coaxial Cable Substitution Hierarchy.**~~

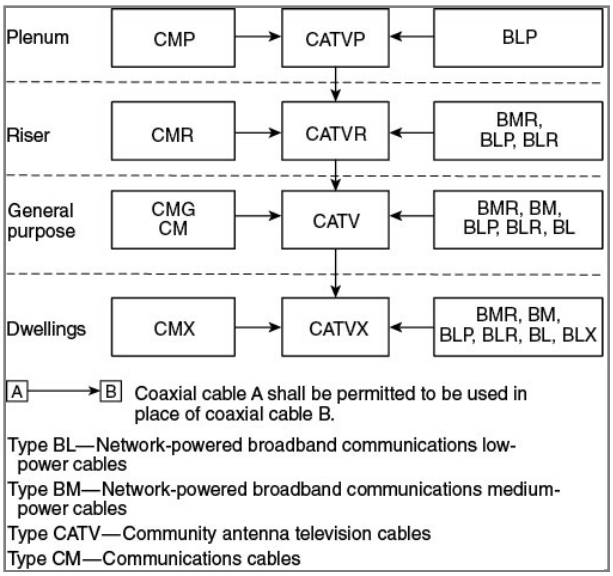

~~**794.156**~~ ~~Substitutions of Network-Powered Broadband Communications System Cables.~~

~~The substitutions for network-powered broadband system cables listed in~~ ~~Table 794.156~~ ~~shall be permitted.~~

~~Table 794.156 Cable Substitutions~~

~~Cable Type Permitted Cable Substitutions BM BMR BLP CMP, CL3P BLR CMP, CL3P, CMR, CL3R, BLP, BMR BL CMP, CMR, CM, CMG, CL3P, CL3R, CL3, BMR, BM, BLP, BLR BLX CMP, CMR, CM, CMG, CMX, CL3P, CL3R, CL3, CL3X, BMR, BM, BLP, BRP, BL~~

~~**794.157**~~ ~~Substitutions of Fire Alarm Cables.~~

~~The substitutions for fire alarm cables listed in~~ ~~Table 794.157~~ ~~and illustrated in~~ ~~Figure 794.157~~ ~~shall be permitted. Where substitute cables are installed, the wiring requirements of Article 760, Parts I and III, shall apply.~~

~~Informational Note:~~ ~~See 800.179 for information on communications cables (CMP, CMR, CMG, CM).~~

~~**Figure 794.157 Cable Substitution Hierarchy.**~~

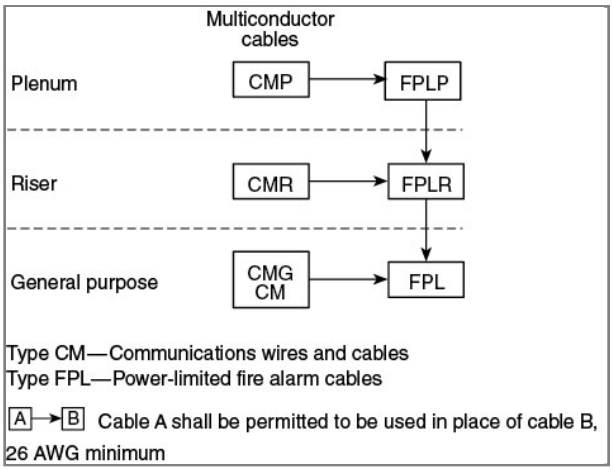

~~Table 794.157 Cable Substitutions~~

~~Cable Type Permitted Substitutions FPLP CMP FPLR CMP, FPLP, CMR FPL CMP, FPLP, CMR, FPLR, CMG, CM~~

~~**794.158** Substitutions of Listed Optical Fiber Cables.~~

~~The substitutions for optical fiber cables in Table 794.158 and illustrated in Figure 794.158 shall be permitted.~~

~~Table 794.158 Cable Substitutions~~

~~Cable Type Permitted Cable Substitutions BM BMR BLP CMP, CL3P BLR CMP, CL3P, CMR, CL3R, BLP, BMR BL CMP, CMR, CM, CMG, CL3P, CL3R, CL3, BMR, BM, BLP, BLR BLX CMP, CMR, CM, CMG, CMX, CL3P, CL3R, CL3, CL3X, BMR, BM, BLP, BRP, BL~~

~~**Figure 794.158 Cable Substitution Hierarchy.**~~

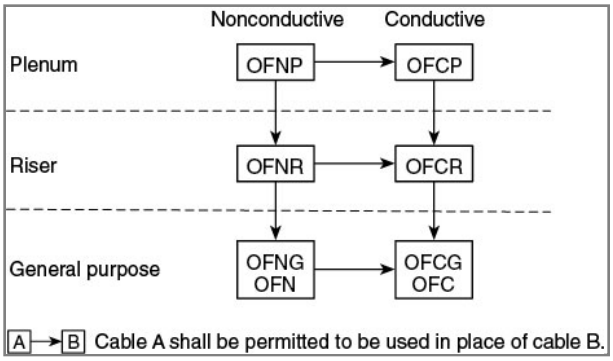

~~**794.160** Circuit Integrity (CI) Cable, Fire-Resistive Cable System, or Electrical Circuit Protective System.~~

~~CI cable, a fire-resistive cable system, or a listed electrical circuit protective system shall be permitted for use in systems that supply critical circuits to ensure survivability for continued circuit operation for a specified time under fire conditions.~~

~~**794.161** Thermocouple Circuits.~~

~~Conductors in Type PLTC cables used for Class 2 thermocouple circuits shall be permitted to be any of the materials used for thermocouple extension wire.~~

~~**794.162** Bundling of 4-Pair Cables Transmitting Power and Data.~~

~~Where 4-pair cables are used to transmit power and data to a powered device, 794.204 shall apply.~~

~~**794.163** Installation of Circuit Conductors Extending Beyond One Building.~~

~~Circuit conductors that extend beyond one building and are run such that they are subject to accidental contact with electric light or power conductors operating over 300 volts to ground, or are exposed to lightning on interbuilding circuits on the same premises, shall comply with the following:~~

(1) ~~For other than coaxial conductors, 800.44 , 800.53 , 800.100, 800.50 , 805.93, 805.170(A) , and 805.170(B)~~

(2) ~~For coaxial conductors, 800.44 , 820.93, and 820.100~~

(3) ~~The installation requirements of Article 300, Part I~~

~~**794.164** Installation in Dwelling Units.~~

~~Where Class 4 cables are used in a dwelling unit, 790.214 shall apply.~~

~~**Part II.** Wiring Methods~~

~~**794.200** Wiring Methods and Materials on Load Side of the Class 2 or Class 3 Power Source.~~

~~Class 2 and Class 3 circuits on the load side of the power source shall be permitted to be installed using wiring methods and materials in accordance with 794.200(A) , 794.200(B) , or a combination of both. Article 722, Parts I and II shall apply.~~

~~**(A)** Class 1 Wiring Methods and Materials.~~

~~Use of Class 1 wiring methods for Class 2 and Class 3 circuits shall be permitted. Separation from electric light, power, Class 1, non-power-limited fire alarm circuit conductors, and medium-power network-powered broadband communications cables shall comply with 725.136 .~~

~~*Exception: The ampacity adjustment factors given in 310.15(C)(1) shall not apply.*~~

(B) Class 2 and Class 3 Wiring Methods and Materials.

Conductors on the load side of the power source shall be insulated in accordance with 794.2 and be installed in accordance with 794.135 and 725.136 through 794.204 :

Exception No. 1: As provided for in 620.21 for elevators and similar equipment.

Exception No. 2: Other wiring methods and materials installed in accordance with 725.3 shall be permitted to extend or replace the conductors and cables described in 794.2(A) and permitted by 794.200(B) :

Exception No. 3: Bare Class 2 conductors shall be permitted as part of a listed intrusion protection system where installed in accordance with the listing instructions for the system.

794.204 Bundling of Cables Transmitting Power and Data.

Sections 794.204(A) and 794.204(B) shall apply to Class 2 and Class 3 circuits that transmit power and data to a powered device over listed cabling. Section 300.13 and Article 725, Parts I and III shall apply to Class 2 and Class 3 circuits that transmit power and data. The conductors that carry power for the data circuits shall be copper. The current in the power circuit shall not exceed the current limitation of the connectors.

Informational Note No. 1: One example of the use of cables that transmit power and data is the connection of closed-circuit TV cameras (CCTV).

Informational Note No. 2: The 8P8C connector is in widespread use with powered communications systems. IEC 60603-7-2008, *Connectors for electronic equipment — Part 7-1: Detail specification for 8-way, unshielded, free and fixed connectors,* specifies these connectors to have a current-carrying capacity per contact of 1.0 amperes maximum at 60°C (149°F). See IEC 60603-7 for more information on current-carrying capacity at higher and lower temperatures.

Informational Note No. 3: The requirements of Table 725.144 were derived for carrying power and data over 4-pair copper balanced twisted pair cabling. This type of cabling is described in ANSI/TIA 568-C.2-2009, *Commercial Building Telecommunications Cabling Standard — Part 2: Balanced Twisted-Pair Telecommunications Cabling and Components* .

Informational Note No. 4: See TIA-TSB-184-A-2017, *Guidelines for Supporting Power Delivery Over Balanced Twisted-Pair Cabling* , for information on installation and management of balanced twisted pair cabling supporting power delivery.

Informational Note No. 5: See ANSI/NEMA C137.3-2017, *American National Standard for Lighting Systems — Minimum Requirements for Installation of Energy Efficient Power over Ethernet (PoE) Lighting Systems* , for information on installation of cables for PoE lighting systems.

Informational Note No. 6: Rated current for power sources covered in 794.204 is the output current per conductor the power source is designed to deliver to an operational load at normal operating conditions, as declared by the manufacturer. In the design of these systems, the actual current in a given conductor might vary from the rated current per conductor by as much as 20 percent. An increase in current in one conductor is offset by a corresponding decrease in current in one or more conductors of the same cable.

(A) Use of 4-Pair Class 2 or Class 3 Cables to Transmit Power and Data.

Where Type CL3P, Type CL2P, Type CL3R, Type CL2R, Type CL3, or Type CL2 4-pair cables transmit power and data, the rated current per conductor of the power source shall not exceed the ampacities in Table 792.204 at an ambient temperature of 30°C (86°F). For ambient temperatures above 30°C (86°F), the correction factors in Table 310.15(B)(1)(1) or in Equation 310.15(B) shall apply.

Exception: Compliance with Table 792.204 shall not be required for installations where conductors are 24 AWG or larger and the rated current per conductor of the power source does not exceed 0.3 amperes.

Informational Note: One example of the use of Class 2 cables is a network of closed-circuit TV cameras using 24 AWG, 60°C (140°F) rated, Type CL2R, Category 5e balanced twisted-pair cabling.

(B) Use of Class 2-LP or Class 3-LP Cables to Transmit Power and Data.

Type CL3P-LP, Type CL2P-LP, Type CL3R-LP, Type CL2R-LP, Type CL3-LP, or Type CL2-LP cables shall be permitted to supply power to equipment from a power source with a rated current per conductor up to the marked current limit located immediately following the suffix "-LP" and shall be permitted to transmit data to the equipment. Where the number of bundled LP cables is 192 or less and the selected ampacity of the cables in accordance with Table 792.204 exceeds the marked current limit of the cable, the ampacity determined from the table shall be permitted to be used. For ambient temperatures above 30°C (86°F), the correction factors of Table 310.15(B)(1)(1) or Equation 310.15(B) shall apply. The Class 2-LP and Class 3-LP cables shall comply with the following, as applicable:

(1) Cables with the suffix "-LP" shall be permitted to be installed in bundles, raceways, cable trays, communications raceways, and cable routing assemblies.

(2) Cables with the suffix "-LP" and a marked current limit shall follow the substitution hierarchy of 722.135(E) for the cable type without the suffix "-LP" and without the marked current limit.

(3) System design shall be permitted by qualified persons under engineering supervision.

Informational Note: An example of the marking on a 23 AWG, 4-pair, Class 2 cable rated 75°C (167°F) with an LP current rating of 0.6 amperes per conductor is "CL2-LP(0.6A) 75°C 23 AWG 4-pair". See 722.179(A)(9).

Table 792.204 Ampacities of Each Conductor in Amperes in 4-Pair Class 2 or Class 3 Balanced Twisted-Pair Cables Based on Copper Conductors at an Ambient Temperature of 30°C (86°F) with All Conductors in All Cables Carrying Current, 60°C (140°F), 75°C (167°F), and 90°C (194°F) Rated Cables

Number of 4-Pair Cables in a Bundle	1–7			8–19			20–37			38–61			62–91			92–192		
Temperature Rating	Temperature Rating	Temperature Rating	Temperature Rating	Temperature Rating	Temperature Rating	Temperature Rating	Temperature Rating	Temperature Rating	Temperature Rating	Temperature Rating	Temperature Rating	Temperature Rating	Temperature Rating	Temperature Rating	Temperature Rating	Temperature Rating	Temperature Rating	Temperature Rating
AWG	60°C	75°C	90°C	60°C	75°C	90°C	60°C	75°C	90°C	60°C	75°C	90°C	60°C	75°C	90°C	60°C	75°C	90°C
26	1.00	1.23	1.42	0.71	0.87	1.02	0.55	0.68	0									

Notes:

1. For bundle sizes over 192 cables, or for conductor sizes smaller than 26 AWG, ampacities shall be permitted to be determined by qualified personnel under engineering supervision.

2. Where only half of the conductors in each cable are carrying current, the values in the table shall be permitted to be increased by a factor of 1.4.

Informational Note No. 1: Elevated cable temperatures can reduce a cable's data transmission performance. For information on practices for 4-pair balanced twisted pair cabling, see TIA-TSB-184-A and 6.4.7, 6.6.3, and Annex G of ANSI/TIA-568-C.2, which provide guidance on adjustments for operating temperatures between 20°C and 60°C.

Informational Note No. 2: The per-contact current rating of connectors can limit the maximum allowable current below the ampacity shown in Table 792.204 :

794.214 Ampacity.

The ampacity of Class 4 cables shall comply with 310.15 based on the temperature rating of the Class 4 cable for conductors sized 16 AWG to 6 AWG. For conductors sized 24 AWG to 17 AWG, the Class 4 cable shall have an ampacity in accordance with by the marking FMP-XXA, where XX is the maximum ampacity permitted. In a dwelling unit(s), not more than 20 current- carrying conductors shall be installed without maintaining spacing.

Informational Note No. 1: See 794.2(A)(16) for additional Class 4 cable requirements.

Informational Note No. 2: See UL 1400-1-2022, *Outline of Investigation for Fault-Managed Power Systems — Part 1: General Requirements* ; and UL 1400-2-2023, *Outline of Investigation for Fault-Managed Power Systems — Part 2: Requirements for Class 4 Cables* , for information on determining maximum ampacities.

794.220 Wiring Methods and Materials on Load Side of the PLFA Power Source.

~~Fire alarm circuits on the load side of the power source shall be permitted to be installed using wiring methods and materials in accordance with 794.220(A) , 794.220(B) , or a combination of both. Article 722, Parts I and II shall apply.~~

~~**(A)** NPLFA Wiring Methods and Materials.~~

~~NPLFA wiring methods shall be permitted when used in accordance with 760.46 , 760.49 , or 760.53 for PLFA circuits. Conductors shall be solid or stranded copper. Separation from electric light, power, Class 1, non-power-limited fire alarm circuit conductors, and medium-power network-powered broadband communications cables shall comply with 760.136 :~~

~~*Exception:* *The ampacity adjustment factors specified in 310.15(C)(1) shall not apply.*~~

~~**(B)** PLFA Wiring Methods and Materials.~~

~~Power-limited fire alarm conductors and cables described in 794.2 shall be installed as detailed in 794.135 and 794.220(B)(1) through 794.220(B)(4) . Devices shall be installed in accordance with 110.3(B) , 300.13(A) , and 300.17 :~~

~~**(1)** In Raceways, Exposed on Ceilings or Sidewalls, or Fished in Concealed Spaces.~~

~~Cable splices or terminations shall be made in listed fittings, boxes, enclosures, fire alarm devices, or utilization equipment. Where installed exposed, cables shall be adequately supported and installed such that maximum protection against physical damage is afforded by building construction such as baseboards, door frames, ledges, and so forth. Where located within 2.1 m (7 ft) of the floor, cables shall be securely fastened in an approved manner at intervals of not more than 450 mm (18 in.).~~

~~**(2)** Passing Through a Floor or Wall.~~

~~Cables shall be installed in metal raceways or rigid nonmetallic conduit where passing through a floor or wall to a height of 2.1 m (7 ft) above the floor, unless adequate protection can be afforded by building construction such as detailed in 794.220(B)(1) or unless an equivalent solid guard is provided.~~

~~**(3)** Nonconcealed Spaces.~~

~~Cables covered by Chapter 3 used for wiring of PLFA circuits and installed in nonconcealed spaces shall comply with the following:~~

(1) ~~The cables shall be installed in accordance with 722.179(A)(15)(a) and 722.179(A)(15)(b).~~

(2) ~~Exposed portions of the cable shall have a length not exceeding 3 m (10 ft).~~

~~**(4)** Portable Fire Alarm Systems.~~

~~A portable fire alarm system provided to protect a stage or set when not in use shall be permitted to use wiring methods in accordance with 530.12 :~~

~~**794.222** Conductor Size.~~

~~Conductors of 26 AWG shall be permitted only where spliced with a connector listed as suitable for 26 AWG to 24 AWG or larger conductors that are terminated on equipment or where the 26 AWG conductors are terminated on equipment listed as suitable for 26 AWG conductors. Single conductors shall not be smaller than 18 AWG.~~

~~**794.223** Support of Conductors.~~

~~Power-limited fire alarm circuit conductors shall not be strapped, taped, or attached by any means to the exterior of any conduit or other raceway as a means of support.~~

~~**794.230** Raceways, Cable Routing Assemblies, and Cable Trays for Optical Fiber Cables.~~

~~**(A)** Types of Raceways.~~

~~Optical fiber cables shall be permitted to be installed in any raceway that complies with either 794.230(A)(1) or 794.230(A)(2) :~~

~~**(1)** Raceways Recognized in Chapter 3.~~

~~Optical fiber cables shall be permitted to be installed in any raceway included in Chapter 3. The raceways shall be installed in accordance with Chapter 3~~

~~**(2)** Communications Raceways.~~

~~Optical fiber cables shall be permitted to be installed in listed communications raceways selected in accordance with Table 794.340(b) :~~

~~**(B)** Raceway Fill for Optical Fiber Cables.~~

~~Raceway fill for optical fiber cables shall comply with either 794.230(B)(1) or 794.230(B)(2) :~~

~~**(1)** Without Electric Light or Power Conductors.~~

~~Where optical fiber cables are installed in a raceway without electric light or power conductors, the raceway fill requirements of Chapters 3 and 9 shall not apply.~~

~~**(2)** Nonconductive Optical Fiber Cables with Electric Light or Power Conductors.~~

~~Where nonconductive optical fiber cables are installed with electric light or power conductors in a raceway, the raceway fill requirements of Chapters 3 and 9 shall apply.~~

~~**(C)** Cable Routing Assemblies.~~

~~Optical fiber cables shall be permitted to be installed in listed cable routing assemblies selected in accordance with Table 794.340(c) :~~

~~**(D)** Cable Trays.~~

~~Optical fiber cables shall be permitted to be installed in metal or listed nonmetallic cable tray systems.~~

~~**794.231** Innerduct for Optical Fiber Cables.~~

~~Listed plenum communications raceways, listed riser communications raceways, and listed general-purpose communications raceways selected in accordance with Table 794.340(b) shall be permitted to be installed as innerduct in any type of listed raceway permitted in Chapter 3.~~

~~**794.233** Installation of Optical Fiber Cables.~~

~~Installation of optical fiber cables shall comply with 794.233(A) through 794.233(J). Installation of raceways and cable routing assemblies shall comply with 794.230 :~~

~~**(A)** Listing.~~

~~Optical fiber cables installed in buildings shall be listed in accordance with 770.179 and installed in accordance with the limitations of the listing.~~

~~*Exception:* *Optical fiber cables that are installed in compliance with 790.434 shall not be required to be listed.*~~

~~**(B)** Ducts Specifically Fabricated for Environmental Air.~~

~~Installations of optical fiber cables in ducts specifically fabricated for environmental air shall be in accordance with 794.233(B)(1) and 794.233(B)(2) :~~

~~**(1)** Uses Permitted.~~

~~The following cables shall be permitted in ducts specifically fabricated for environmental air as described in 300.22(B) if they are directly associated with the air distribution system:~~

(1) ~~Up to 1.22 m (4 ft) of Types OFNP and OFCP~~

(2) ~~Types OFNP, OFCP, OFNR, OFCR, OFNG, OFCG, OFN, and OFC installed in raceways that are installed in compliance with 300.22(B)~~

~~Informational Note: See NFPA 90A-2024, *Standard for the Installation of Air-Conditioning and Ventilating Systems*, for information on fire protection of wiring installed in fabricated ducts.~~

~~**(2)** Uses Not Permitted.~~

~~Types OFNR, OFCR, OFNG, OFCG, OFN, and OFC shall not be permitted to be installed in ducts specifically fabricated for environmental air as described in 300.22(B).~~

~~Informational Note: See NFPA 90A-2024, *Standard for the Installation of Air-Conditioning and Ventilating Systems*, for information on fire protection of wiring installed in fabricated ducts.~~

~~**(C)** Other Spaces Used for Environmental Air (Plenums).~~

~~Installations of optical fiber cables in other spaces used for environmental air shall be in accordance with 794.233(C)(1) and 794.233(C)(2):~~

~~**(1)** Uses Permitted.~~

~~The following cables shall be permitted in other spaces used for environmental air as described in 300.22(C):~~

(1) ~~Types OFNP and OFCP~~

(2) ~~Types OFNP and OFCP installed in plenum communications raceways~~

(3) ~~Types OFNP and OFCP installed in plenum cable routing assemblies~~

(4) ~~Types OFNP and OFCP supported by open metal cable tray systems~~

(5) ~~Types OFNP, OFCP, OFNR, OFCR, OFNG, OFCG, OFN, and OFC installed in raceways that are installed in compliance with 300.22(C)~~

(6) ~~Types OFNP, OFCP, OFNR, OFCR, OFNG, OFCG, OFN, and OFC supported by solid bottom metal cable trays with solid metal covers in other spaces used for environmental air (plenums), as described in 300.22(C)~~

(7) ~~Types OFNP, OFCP, OFNR, OFCR, OFNG, OFCG, OFN, and OFC installed in plenum riser and general-purpose communications raceways supported by solid bottom metal cable trays with solid metal covers in other spaces used for environmental air (plenums), as described in 300.22(C)~~

~~**(2)** Uses Not Permitted.~~

~~Types OFNR, OFCR, OFNG, OFCG, OFN, and OFC shall not be permitted to be installed in other spaces used for environmental air (plenums).~~

~~Informational Note: See NFPA 90A-2024, *Standard for the Installation of Air-Conditioning and Ventilating Systems*, for information on fire protection of wiring installed in other spaces used for environmental air.~~

~~**(D)** Risers — Cables in Vertical Runs.~~

~~Installations of optical fiber cables in vertical runs shall be in accordance with 794.233(D)(1) and 794.233(D)(2):~~

~~**(1)** Uses Permitted.~~

~~The following cables shall be permitted in vertical runs penetrating one or more floors and in vertical runs in a shaft:~~

(1) ~~Types OFNP, OFCP, OFNR, and OFCR~~

(2) ~~Types OFNP, OFCP, OFNR, and OFCR installed in the following:~~

(3) ~~Plenum communications raceways~~

(4) ~~Plenum cable routing assemblies~~

(5) ~~Riser communications raceways~~

(6) ~~Riser cable routing assemblies~~

~~**(2)** Uses Not Permitted.~~

~~Types OFNG, OFCG, OFN, and OFC shall not be permitted to be installed in vertical runs.~~

~~Informational Note: See 770.26 for firestop requirements for floor penetrations.~~

~~**(E)** Risers — Cables Permitted in Metal Raceways.~~

~~The following cables and innerducts shall be permitted in metal raceways in a riser having firestops at each floor:~~

(1) ~~Types OFNP, OFCP, OFNR, OFCR, OFNG, OFCG, OFN, and OFC~~

(2) ~~Types OFNP, OFCP, OFNR, OFCR, OFNG, OFCG, OFN, and OFC installed in the following:~~

(3) ~~Plenum communications raceways (innerduct)~~

(4) ~~Riser communications raceways (innerduct)~~

(5) ~~General-purpose communications raceways (innerduct)~~

~~Informational Note: See 770.26 for firestop requirements for floor penetrations.~~

~~(F) Risers — Cables Permitted in Fireproof Shafts.~~

~~The following cables shall be permitted to be installed in fireproof riser shafts having firestops at each floor:~~

(1) ~~Types OFNP, OFCP, OFNR, OFCR, OFNG, OFCG, OFN, and OFC~~

(2) ~~Types OFNP, OFCP, OFNR, OFCR, OFNG, OFCG, OFN, and OFC installed in the following:~~

(3) ~~Plenum communications raceways~~

(4) ~~Plenum cable routing assemblies~~

(5) ~~Riser communications raceways~~

(6) ~~Riser cable routing assemblies~~

(7) ~~General-purpose communications raceways~~

(8) ~~General-purpose cable routing assemblies~~

~~Informational Note: See 770.26 for firestop requirements for floor penetrations.~~

~~(G) Risers — Cables Permitted in One- and Two-Family Dwellings.~~

~~The following cables shall be permitted in one- and two-family dwellings:~~

(1) ~~Types OFNP, OFCP, OFNR, OFCR, OFNG, OFCG, OFN, and OFC~~

(2) ~~Types OFNP, OFCP, OFNR, OFCR, OFNG, OFCG, OFN, and OFC installed in the following:~~

(3) ~~Plenum communications raceways~~

(4) ~~Plenum cable routing assemblies~~

(5) ~~Riser communications raceways~~

(6) ~~Riser cable routing assemblies~~

(7) ~~General-purpose communications raceways~~

(8) ~~General-purpose cable routing assemblies~~

~~(H) Cable Trays — Cables Permitted.~~

~~The following cables shall be permitted to be supported by cable trays:~~

(1) ~~Types OFNP, OFCP, OFNR, OFCR, OFNG, OFCG, OFN, and OFC~~

(2) ~~Types OFNP, OFCP, OFNR, OFCR, OFNG, OFCG, OFN, and OFC installed in the following:~~

(3) ~~Plenum communications raceways~~

(4) ~~Riser communications raceways~~

(5) ~~General-purpose communications raceways~~

~~(I) Distributing Frames and Cross-Connect Arrays — Cables Permitted.~~

~~The following cables shall be permitted to be installed in distributing frames and cross-connect arrays:~~

(1) ~~Types OFNP, OFCP, OFNR, OFCR, OFNG, OFCG, OFN, and OFC~~

(2) ~~Types OFNP, OFCP, OFNR, OFCR, OFNG, OFCG, OFN, and OFC installed in the following:~~

(3) ~~Plenum communications raceways~~

(4) ~~Plenum cable routing assemblies~~

(5) ~~Riser communications raceways~~

(6) ~~Riser cable routing assemblies~~

(7) ~~General-purpose communications raceways~~

(8) ~~General-purpose cable routing assemblies~~

~~**(J)** Other Building Locations — Cables Permitted.~~

~~The following cables shall be permitted to be installed in building locations other than the locations covered in 794.233(B) through 794.233(I) :~~

(1) ~~Types OFNP, OFCP, OFNR, OFCR, OFNG, OFCG, OFN, and OFC~~

(2) ~~Types OFNP, OFCP, OFNR, OFCR, OFNG, OFCG, OFN, and OFC installed in the following:~~

(3) ~~Plenum communications raceways~~

(4) ~~Plenum cable routing assemblies~~

(5) ~~Riser communications raceways~~

(6) ~~Riser cable routing assemblies~~

(7) ~~General-purpose communications raceways~~

(8) ~~General-purpose cable routing assemblies~~

(9) ~~Types OFNP, OFCP, OFNR, OFCR, OFNG, OFCG, OFN, and OFC installed in a raceway of a type recognized in Chapter 3~~

~~**794.234** Installation of Optical Fibers and Electrical Conductors.~~

~~**(A)** In Cable Trays and Raceways.~~

~~Conductive optical fiber cables contained in an armored or metal-clad-type sheath and nonconductive optical fiber cables shall be permitted to occupy the same cable tray or raceway with conductors for electric light, power, Class 1, non-power-limited fire alarm, Type ITC, or medium-power network-powered broadband communications circuits operating at 1000 volts or less. Conductive optical fiber cables without an armored or metal-clad-type sheath shall not be permitted to occupy the same cable tray or raceway with conductors for electric light, power, Class 1, non-power-limited fire alarm, Type ITC, or medium-power network-powered broadband communications circuits, unless all of the conductors of electric light, power, Class 1, non-power-limited fire alarm, and medium-power network-powered broadband communications circuits are separated from all of the optical fiber cables by a permanent barrier or listed divider.~~

~~**(B)** In Cabinets, Outlet Boxes, and Similar Enclosures.~~

~~Nonconductive optical fiber cables shall not be permitted to occupy the same cabinet, outlet box, panel, or similar enclosure housing the electrical terminations of an electric light, power, Class 1, non-power-limited fire alarm, or medium-power network-powered broadband communications circuit unless one or more of the following conditions exist:~~

(1) ~~The nonconductive optical fiber cables are functionally associated with the electric light, power, Class 1, non-power-limited fire alarm, or medium-power network-powered broadband communications circuit.~~

(2) ~~The conductors for electric light, power, Class 1, non-power-limited fire alarm, Type ITC, or medium-power network-powered broadband communications circuits operate at 1000 volts or less.~~

(3) ~~The nonconductive optical fiber cables and the electrical terminations of electric light, power, Class 1, non-power-limited fire alarm, or medium-power network-powered broadband communications circuit are installed in factory- or field-assembled control centers.~~

(4) ~~The nonconductive optical fiber cables are installed in an industrial establishment where conditions of maintenance and supervision ensure that only qualified persons service the installation.~~

~~When optical fibers are within the same hybrid cable for electric light, power, Class 1, non-power-limited fire alarm, or medium-power network-powered broadband communications circuits operating at 1000 volts or less, they shall be permitted to be installed only where the functions of the optical fibers and the electrical conductors are associated.~~

~~Optical fibers in hybrid optical fiber cables containing only current-carrying conductors for electric light, power, or Class 1 circuits rated 1000 volts or less shall be permitted to occupy the same cabinet, cable tray, outlet box, panel, raceway, or other termination enclosure with conductors for electric light, power, or Class 1 circuits operating at 1000 volts or less.~~

~~Optical fibers in hybrid optical fiber cables containing current-carrying conductors for electric light, power, or Class 1 circuits rated over 1000 volts shall be permitted to occupy the same cabinet, cable tray, outlet box, panel, raceway, or other termination enclosure with conductors for electric light, power, or Class 1 circuits in industrial establishments, where conditions of maintenance and supervision ensure that only qualified persons service the installation.~~

~~**(C)** With Other Circuits.~~

~~Conductive and nonconductive optical fiber cables shall be permitted in the same raceway, cable tray, box, enclosure, or cable routing assembly, with conductors of any of the following:~~

(1) ~~Class 2 and Class 3 remote-control, signaling, and power-limited circuits in compliance with 645.5(E)(2) or Article 725, Parts I and II~~

(2) ~~Power-limited fire alarm systems in compliance with Article 760, Parts I and III~~

(3) ~~Communications circuits in compliance with Article 805, Parts I and V~~

(4) ~~Community antenna television and radio distribution systems in compliance with Article 820, Parts I and V~~

(5) ~~Low-power network-powered broadband communications circuits in compliance with Article 830, Parts I and V~~

~~**(D)** Support of Optical Fiber Cables.~~

~~Raceways shall be used for their intended purpose. Optical fiber cables shall not be strapped, taped, or attached by any means to the exterior of any conduit or raceway as a means of support.~~

~~*Exception: Overhead (aerial) spans of optical fiber cables shall be permitted to be attached to the exterior of a raceway-type mast intended for the attachment and support of such cables.*~~

~~**794.240** Raceways, Cable Routing Assemblies, and Cable Trays.~~

~~**(A)** Types of Raceways.~~

~~Wires and cables shall be permitted to be installed in raceways that comply with 794.240(A)(1) , 794.240(A)(2) , or 794.240(A)(3) . Medium-power network-powered broadband communications cables shall not be installed in raceways that comply with 794.240(A)(2) .~~

~~**(1)** Raceways Recognized in Chapter 3.~~

~~Wires and cables shall be permitted to be installed in any raceway included in Chapter 3. The raceways shall be installed in accordance with Chapter 3.~~

~~**(2)** Communications Raceways.~~

~~Wires and cables shall be permitted to be installed in plenum communications raceways, riser communications raceways, and general-purpose communications raceways selected in accordance with Table 790.340(b), listed in accordance with 800.182, and installed in accordance with 794.242 and 362.24 through 362.56, where the requirements applicable to electrical nonmetallic tubing (ENT) apply.~~

~~**(3)** Innerduct for Communications Wires and Cables, Coaxial Cables, or Network-Powered Broadband Communications Cables.~~

~~Listed plenum communications raceways, listed riser communications raceways, and listed general-purpose communications raceways selected in accordance with Table 794.340(b) shall be permitted to be installed as innerduct in any type of listed raceway permitted in Chapter 3.~~

~~**(B)** Raceway Fill.~~

~~The raceway fill requirements of Chapters 3 and 9 shall apply to medium-power network-powered broadband communications cables.~~

~~**(C)** Cable Routing Assemblies.~~

~~Cables shall be permitted to be installed in plenum cable routing assemblies, riser cable routing assemblies, and general-purpose cable routing assemblies selected in accordance with Table 794.340(c) , listed in accordance with 800.182, and installed in accordance with 794.240(C)(1) ; 794.240(C)(2) , and 794.242 :~~

~~**(1)** Horizontal Support.~~

~~Cable routing assemblies shall be supported where run horizontally at intervals not to exceed 900 mm (3 ft) and at each end or joint, unless listed for other support intervals. In no case shall the distance between supports exceed 3 m (10 ft).~~

~~**(2)** Vertical Support.~~

~~Vertical runs of cable routing assemblies shall be supported at intervals not exceeding 1.2 m (4 ft), unless listed for other support intervals, and shall not have more than one joint between supports.~~

~~**(D)** Cable Trays.~~

~~Wires and cables and communications raceways shall be permitted to be installed in metal or listed nonmetallic cable tray systems. Ladder cable trays shall be permitted to support cable routing assemblies.~~

~~**794.242** Installation of Cables Used for Communications Circuits, Communications Wires, Cable Routing Assemblies, and Communications Raceways.~~

~~Installation of wires, cables, cable routing assemblies, and communications raceways shall comply with 794.242(A) through 794.242(L) . Installation of cable routing assemblies and communications raceways shall comply also with 794.240 . Types of cables used by this section shall be identified in Table 794.242 :~~

~~Table 794.242 Cables Used for Communications Circuits~~
~~- Listed Cable Types Plenum cables CMP, CATVP, BLP, OFNP, OFCP Riser cables CMR, CATVR, BMR, BLR, OFNR, OFCR General-purpose cables CMG, CM, CATV, BM, BL, OFNG, OFN, OFCG, OFC Limited-use cables CMX, CATVX, BLX Under-carpet CMUC Underground BMU, BLU~~

~~**(A)** Listing.~~

~~Cables used for communications circuits, communications wires, cable routing assemblies, and communications raceways installed in buildings shall be listed and installed in accordance with the limitations of the listing.~~

~~*Exception: Cables installed in compliance with 800.48 shall not be required to be listed.*~~

~~**(B)** Ducts Specifically Fabricated for Environmental Air.~~

~~Installations of cables used for communications circuits, communications wires, cable routing assemblies, and communications raceways in ducts specifically fabricated for environmental air shall be in accordance with 794.242(B)(1) and 794.242(B)(2) :~~

~~**(1)** Uses Permitted.~~

~~The following cables shall be permitted in ducts specifically fabricated for environmental air as described in 300.22(B) if they are directly associated with the air distribution system:~~

(1) ~~Plenum cables up to 1.22 m (4 ft) in length~~

(2) ~~Plenum, rise, general-purpose, and limited-use cables installed in raceways that are installed in compliance with 300.22(B)~~

~~**(2)** Uses Not Permitted.~~

~~The following cables, wires, cable routing assemblies, and communications raceways shall not be permitted in ducts specifically fabricated for environmental air as described in 300.22(B) :~~

(1) ~~Plenum, riser, and general-purpose communications raceways~~

(2) ~~Plenum, riser, and general-purpose cable routing assemblies~~

(3) ~~Riser, general-purpose, and limited-use cables~~

(4) ~~Type CMUC cables and wires~~

(5) ~~Types BMU and BLU cables~~

(6) ~~Communications wires~~

(7) ~~Hybrid power and communications cables~~

~~Informational Note: See NFPA 90A-2024, *Standard for the Installation of Air-Conditioning and Ventilating Systems* , for information on fire protection of wiring installed in fabricated ducts.~~

~~**(C)** Other Spaces Used for Environmental Air (Plenums).~~

~~Installations of cables used for communications circuits, communications wires, cable routing assemblies, and communications raceways in other spaces used for environmental air (plenums) shall be in accordance with 794.242(C)(1) and 794.242(C)(2) :~~

~~**(1)** Uses Permitted.~~

~~The following cables, wires, cable routing assemblies, and communications raceways shall be permitted in other spaces used for environmental air as described in 300.22(C):~~

(1) ~~Plenum cables~~

(2) ~~Plenum communications raceways~~

(3) ~~Plenum cable routing assemblies~~

(4) ~~Plenum cables installed in plenum communications raceways~~

(5) ~~Plenum cables installed in plenum cable routing assemblies~~

(6) ~~Plenum cables and plenum communications raceways supported by open metal cable tray systems~~

(7) ~~Plenum, riser, general-purpose, and limited-use cables, and communications wires installed in raceways that are installed in compliance with 300.22(C)~~

(8) ~~Plenum, rise, general-purpose, limited-use cables and plenum, riser, and general-purpose communications raceways supported by solid bottom metal cable trays with solid metal covers in other spaces used for environmental air (plenums) as described in 300.22(C)~~

(9) ~~Plenum, riser, general-purpose, and limited-use cables installed in plenum, riser, and general-purpose communications raceways supported by solid bottom metal cable trays with solid metal covers in other spaces used for environmental air (plenums) as described in 300.22(C)~~

~~**(2)** Uses Not Permitted.~~

~~The following cables, wires, cable routing assemblies, and communications raceways shall not be permitted in other spaces used for environmental air as described in 300.22(C):~~

(1) ~~Riser, general-purpose, and limited-use cables~~

(2) ~~Riser and general-purpose communications raceways~~

(3) ~~Riser and general-purpose cable routing assemblies~~

(4) ~~Type CMUC cables and wires~~

(5) ~~Types BMR, BM, BMU, and BLU cables~~

(6) ~~Communications wires~~

(7) ~~Hybrid power and communications cables~~

~~Informational Note: See NFPA 90A-2024, *Standard for the Installation of Air-Conditioning and Ventilating Systems* , for information on fire protection of wiring installed in other spaces used for environmental air.~~

~~**(D)** Risers — Cables, Cable Routing Assemblies, and Communications Raceways in Vertical Runs.~~

~~Installations of cables used for communications circuits, communications wires, cable routing assemblies, and communications raceways in risers shall be in accordance with 794.242(D)(1) and 794.242(D)(2) :~~

~~**(1)** Uses Permitted.~~

~~The following cables, cable routing assemblies, and communications raceways shall be permitted in vertical runs penetrating one or more floors and in vertical runs in a shaft:~~

(1) ~~Plenum and riser cables~~

(2) ~~Plenum and riser communications raceways~~

(3) ~~Plenum and riser cable routing assemblies~~

(4) ~~Plenum and riser cables installed in the following:~~

  (5) ~~Plenum communications raceways~~

  (6) ~~Riser communications raceways~~

  (7) ~~Plenum cable routing assemblies~~

  (8) ~~Riser cable routing assemblies~~

~~**(2)** Uses Not Permitted.~~

~~The following cables, wires, cable routing assemblies, and communications raceways shall not be permitted in risers:~~

(1) ~~General-purpose and limited-use cables~~

(2) ~~General-purpose communications raceways~~

(3) ~~General-purpose cable routing assemblies~~

(4) ~~Type CMUC cables and wires~~

(5) ~~Types BMR, BM, BMU, and BLU cables~~

(6) ~~Communications wires~~

(7) ~~Hybrid power and communications cables~~

~~Informational Note: See 800.26 for firestop requirements for floor penetrations.~~

~~**(E)** Risers — Cables and Innerducts in Metal Raceways.~~

~~Installations of cables used for communications circuits, communications wires, cable routing assemblies, and communications raceways in metal raceways in a riser having firestops at each floor shall be in accordance with 794.242(E)(1) and 794.242(E)(2) :~~

~~(1) Uses Permitted.~~

~~The following cables and innerducts shall be permitted in metal raceways in a riser having firestops at each floor:~~

(1) ~~Plenum, riser, general-purpose, and limited-use cables~~

(2) ~~Plenum, riser, and general-purpose communications raceways (innerduct)~~

(3) ~~Plenum, riser, general-purpose, and limited-use cables installed in the following:~~

(4) ~~Plenum communications raceways (innerduct)~~

(5) ~~Riser communications raceways (innerduct)~~

(6) ~~General-purpose communications raceways (innerduct)~~

~~(2) Uses Not Permitted.~~

~~The following cables, wires, cable routing assemblies, and communications raceways shall not be permitted in metal raceways in a riser having firestops at each floor:~~

(1) ~~Plenum, riser, and general-purpose cable routing assemblies~~

(2) ~~Type CMUC cables and wires~~

(3) ~~Types BMR, BM, BMU, and BLU cables~~

(4) ~~Communications wires~~

(5) ~~Hybrid power and communications cables~~

~~Informational Note: See 800.26 for firestop requirements for floor penetrations.~~

~~(F) Risers — Cables, Cable Routing Assemblies, and Communications Raceways in Fireproof Shafts.~~

~~Installations of cables used for communications circuits, communications wires, cable routing assemblies, and communications raceways in fireproof riser shafts having firestops at each floor shall be in accordance with 794.242(F)(1) and 794.242(F)(2) :~~

~~(1) Uses Permitted.~~

~~The following cables, cable routing assemblies, and communications raceways shall be permitted to be installed in fireproof riser shafts having firestops at each floor:~~

(1) ~~Plenum, riser, general-purpose, and limited-use cables~~

(2) ~~Plenum, riser, and general-purpose communications raceways~~

(3) ~~Plenum, riser, and general-purpose cable routing assemblies~~

(4) ~~Plenum, riser, general-purpose, and limited-use cables installed in the following:~~

(5) ~~Plenum communications raceways~~

(6) ~~Riser communications raceways~~

(7) ~~General-purpose communications raceways~~

(8) ~~Plenum cable routing assemblies~~

(9) ~~Riser cable routing assemblies~~

(10) ~~General-purpose cable routing assemblies~~

~~(2) Uses Not Permitted.~~

~~The following cables, wires, cable routing assemblies, and communications raceways shall not be permitted in metal raceways in fireproof riser shafts having firestops at each floor:~~

(1) ~~Type CMUC cables and wires~~

(2) ~~Type BMU and BLU cables~~

(3) ~~Communications wires~~

(4) ~~Hybrid power and communications cables~~

~~Informational Note: See 800.26 for firestop requirements for floor penetrations.~~

~~(G) Risers — One- and Two-Family Dwellings.~~

~~Installations of cables used for communications circuits, communications wires, cable routing assemblies, and communications raceways in risers in one- and two-family dwellings shafts shall be in accordance with 794.242(G)(1) and 794.242(G)(2) :~~

~~**(1)** Uses Permitted.~~

~~The following cables, cable routing assemblies, and communications raceways shall be permitted in one- and two-family dwellings:~~

(1) ~~Plenum, riser, and general-purpose cables~~

(2) ~~Limited-use cables less than 6 mm (0.25 in.) in diameter~~

(3) ~~Plenum, riser, and general-purpose communications raceways~~

(4) ~~Plenum, riser, and general-purpose cable routing assemblies~~

(5) ~~Plenum, riser, and general-purpose cables installed in the following:~~

(6) ~~Plenum communications raceways~~

(7) ~~Riser communications raceways~~

(8) ~~General-purpose communications raceways~~

(9) ~~Plenum cable routing assemblies~~

(10) ~~Riser cable routing assemblies~~

(11) ~~General-purpose cable routing assemblies~~

~~**(2)** Uses Not Permitted.~~

~~The following cables and wires shall not be permitted in risers in one- and two-family dwellings:~~

(1) ~~Type CMUC cables and wires~~

(2) ~~Type BMU and BLU cables~~

(3) ~~Communications wires~~

(4) ~~Hybrid power and communications cables~~

~~**(H)** Cable Trays.~~

~~Installations of cables used for communications circuits, communications wires, cable routing assemblies, and communications raceways supported by cable trays shall be in accordance with 794.242(H)(1) and 794.242(H)(2).~~

~~**(1)** Uses Permitted.~~

~~The following wires, cables, and communications raceways shall be permitted to be supported by cable trays:~~

(1) ~~Plenum, riser, and general-purpose cables~~

(2) ~~Plenum, riser, and general-purpose communications raceways~~

(3) ~~Communications wires, plenum, riser, and general-purpose cables installed in the following:~~

(4) ~~Plenum communications raceways~~

(5) ~~Riser communications raceways~~

(6) ~~General-purpose communications raceways~~

~~**(2)** Uses Not Permitted.~~

~~The following cables and wires shall not be supported by cable trays:~~

(1) ~~Limited-use cables~~

(2) ~~Type CMUC cables and wires~~

(3) ~~Type BMU and BLU cables~~

(4) ~~Communications wires~~

(5) ~~Hybrid power and communications cables~~

~~**(I)** Distributing Frames and Cross-Connect Arrays.~~

~~Installations of cables used for communications circuits, communications wires, cable routing assemblies, and communications raceways in distributing frames and cross-connect arrays shall be in accordance with 794.242(I)(1) and 794.242(I)(2).~~

~~**(1)** Uses Permitted.~~

~~The following wires, cables, cable routing assemblies, and communications raceways shall be permitted to be installed in distributing frames and cross-connect arrays:~~

(1) ~~Plenum, riser, general-purpose cables and communications wires~~

(2) ~~Plenum, riser, and general-purpose communications raceways~~

(3) ~~Plenum, riser, and general-purpose cable routing assemblies~~

(4) ~~Communications wires, plenum, riser, and general-purpose cables installed in the following:~~

(5) ~~Plenum communications raceways~~

(6) ~~Riser communications raceways~~

(7) ~~General-purpose communications raceways~~

(8) ~~Plenum cable routing assemblies~~

(9) ~~Riser cable routing assemblies~~

(10) ~~General-purpose cable routing assemblies~~

~~**(2)** Uses Not Permitted.~~

~~The following cables and wires shall not be installed in distributing frames and cross-connect arrays:~~

(1) ~~Types BMR, BM, BMU, and BLU cables~~

(2) ~~Limited-use cables~~

(3) ~~Type CMUC cables and wires~~

(4) ~~Hybrid power and communications cables~~

~~**(J)** Other Building Locations.~~

~~Installations of cables used for communications circuits, cable communications wires, routing assemblies, and communications raceways in building locations other than those covered in 794.242(B) through 794.242(I) shall be in accordance with 794.242(J)(1) and 794.242(J)(2) :~~

~~**(1)** Uses Permitted.~~

~~The following wires, cables, cable routing assemblies, and communications raceways shall be permitted to be installed in building locations other than the locations covered in 794.242(B) through 794.242(I) :~~

(1) ~~Plenum, riser, and general-purpose cables~~

(2) ~~Limited-use cables with a maximum of 3 m (10 ft) of exposed length in nonconcealed spaces~~

(3) ~~Plenum, riser, and general-purpose communications raceways~~

(4) ~~Plenum, riser, and general-purpose cable routing assemblies~~

(5) ~~Communications wires, plenum, riser, and general-purpose cables installed in the following:~~

(6) ~~Plenum communications raceways~~

(7) ~~Riser communications raceways~~

(8) ~~General-purpose communications raceways~~

(9) ~~Plenum, riser, and general-purpose cables installed in the following:~~

(10) ~~Plenum cable routing assemblies~~

(11) ~~Riser cable routing assemblies~~

(12) ~~General-purpose cable routing assemblies~~

(13) ~~Communications wires and plenum, riser, general-purpose, and limited-use cables installed in raceways recognized in Chapter 3~~

(14) ~~Type CMUC under-carpet communications wires and cables installed under carpet, modular flooring, and planks~~

~~**(2)** Uses Not Permitted.~~

~~The following cables, wires, cable routing assemblies, and communications raceways shall not be installed in building locations other than the locations covered in 794.242(B) through 794.242(I) :~~

(1) ~~Types BMU and BLU cables~~

(2) ~~Communications wires~~

(3) ~~Hybrid power and communications cables~~

~~**(K)** Multifamily Dwellings.~~

~~Installations of cables used for communications circuits, communications wires, cable routing assemblies, and communications raceways in multifamily dwellings shall be in accordance with 794.242(K)(1) and 794.242(K)(2) :~~

~~**(1)** Uses Permitted.~~

~~The following cables, cable routing assemblies, and communications raceways shall be permitted to be installed in multifamily dwellings in locations other than the locations covered in 794.242(B) through 794.242(G) :~~

(1) ~~Plenum, riser, and general-purpose cables~~

(2) ~~Limited-use cables less than 6 mm (0.25 in.) in diameter in nonconcealed spaces~~

(3) ~~Plenum, riser, and general-purpose communications raceways~~

(4) ~~Plenum, riser, and general-purpose cable routing assemblies~~

(5) ~~Communications wires and plenum, riser, and general-purpose cables installed in the following:~~

(6) ~~Plenum communications raceways~~

(7) ~~Riser communications raceways~~

(8) ~~General-purpose communications raceways~~

(9) ~~Plenum, riser, and general-purpose cables installed in the following:~~

(10) ~~Plenum cable routing assemblies~~

(11) ~~Riser cable routing assemblies~~

(12) ~~General-purpose cable routing assemblies~~

(13) ~~Communications wires and plenum, riser, general-purpose, and limited-use cables installed in raceways recognized in Chapter 3~~

(14) ~~Type CMUC under-carpet communications wires and cables installed under carpet, modular flooring, and planks~~

~~**(2)** Uses Not Permitted.~~

~~The following cables, cable routing assemblies, and communications raceways shall not be installed in multifamily dwellings in locations other than the locations covered in 794.242(B) through 794.242(G) :~~

(1) ~~Types BMU and BLU cables~~

(2) ~~Communications wires~~

(3) ~~Hybrid power and communications cables~~

~~**(L)** One- and Two-Family Dwellings.~~

~~Installations of cables used for communications circuits, communications wires, cable routing assemblies, and communications raceways in one- and two-family dwellings in locations other than those covered in 794.242(B) through 794.242(F) shall be in accordance with 794.242(L)(1) and 794.242(L)(2) :~~

~~**(1)** Uses Permitted.~~

~~The following wires, cables, cable routing assemblies, and communications raceways shall be permitted to be installed in one- and two-family dwellings in locations other than the locations covered in 794.242(B) through 794.242(F) :~~

(1) ~~Plenum, riser, and general-purpose cables~~

(2) ~~Limited-use cables less than 6 mm (0.25 in.) in diameter~~

(3) ~~Plenum, riser, and general-purpose communications raceways~~

(4) ~~Plenum, riser, and general-purpose cable routing assemblies~~

(5) ~~Communications wires and plenum, riser, and general-purpose cables installed in the following:~~

(6) ~~Plenum communications raceways~~

(7) ~~Riser communications raceways~~

(8) ~~General-purpose communications raceways~~

(9) ~~Plenum, riser, and general-purpose cables installed in the following:~~

(10) ~~Plenum cable routing assemblies~~

(11) ~~Riser cable routing assemblies~~

(12) ~~General-purpose cable routing assemblies~~

(13) ~~Communications wires and plenum, riser, general-purpose, and limited-use cables installed in raceways recognized in Chapter 3~~

(14) ~~Type CMUC under-carpet communications wires and cables installed under carpet, modular flooring, and planks~~

(15) ~~Hybrid power and communications cable listed in accordance with 800.179~~

~~**(2)** Uses Not Permitted.~~

~~The following cables, wires, cable routing assemblies, and communications raceways shall not be installed in one- and two-family dwellings in locations other than those covered in 794.242(B) through 794.242(F) :~~

(1) ~~Types BMU and BLU cables~~

(2) ~~Communications wires~~

~~**794.244** Installation of Communications Wires and Cables and CATV-Type Coaxial Cables.~~

~~Installation of communications wires and cables, from the protector to the equipment, or where no protector is required, communications wires and cables attached to the outside or inside of the building, shall comply with 794.244(A) and 794.244(B). Installation of CATV-type coaxial cables, beyond the point of grounding as defined in 820.93, shall comply with 794.244(A) through 794.244(C).~~

~~**(A)** In Raceways, Cable Trays, Boxes, Cables, Enclosures, and Cable Routing Assemblies.~~

~~**(1)** Other Circuits.~~

~~Communications cables and CATV-type coaxial cables shall be permitted in the same raceway, cable tray, box, enclosure, or cable routing assembly together and with jacketed cables of any of the following:~~

(1) ~~Class 2 and Class 3 remote-control, signaling, and power-limited circuits in compliance with 645.5(E)(2) or Article 725, Parts I and II~~

(2) ~~Power-limited fire alarm systems in compliance with Article 760, Parts I and III~~

(3) ~~Nonconductive and conductive optical fiber cables in compliance with Article 770, Parts I and V~~

(4) ~~Communications circuits in compliance with Articles 800 and 805, Parts I and IV~~

(5) ~~Community antenna television and radio distribution systems in compliance with Articles 800 and 820, Parts I and V~~

(6) ~~Low-power network-powered broadband communications circuits in compliance with Articles 800 and 830, Parts I and V~~

~~**(2)** Class 2 and Class 3 Circuits.~~

~~Class 1 circuits shall not be run in the same cable with communications circuits. Class 2 and Class 3 circuit conductors shall be permitted in the same listed communications cable with communications circuits.~~

~~**(3)** Electric Light, Power, Class 1, Non-Power-Limited Fire Alarm, and Medium-Power Network-Powered Broadband Communications Circuits in Raceways, Compartments, and Boxes.~~

~~Communications wires and cables and CATV-type coaxial cables shall not be placed in any raceway, compartment, outlet box, junction box, or similar fitting with conductors of electric light, power, Class 1, non-power-limited fire alarm, or medium-power network-powered broadband communications circuits.~~

~~*Exception No. 1: Communications wires and cables and CATV-type coaxial cables shall be permitted to be placed in any raceway, compartment, outlet box, junction box, or other enclosures with conductors of electric light, power, Class 1, non-power-limited fire alarm, or medium-power network-powered broadband communications circuits where all of the conductors of electric light, power, Class 1, non-power-limited fire alarm, and medium-power network-powered broadband communications circuits are separated from all of the communications wires and cables and CATV-type coaxial cables by a permanent barrier or listed divider.*~~

~~*Exception No. 2: Communications wires and cables and CATV-type coaxial cables shall be permitted to be placed in outlet boxes, junction boxes, or similar fittings or compartments with power conductors where such conductors are introduced solely for power supply to the communications and coaxial cable system distribution equipment. The power circuit conductors shall be routed within the enclosure to maintain a minimum 6 mm (¼ in.) separation from the communications wires and cables and the CATV- type coaxial cables.*~~

~~*Exception No. 3: Separation of circuits shall not be required in elevator traveling cables constructed in accordance with by 620.36.*~~

~~**(B)** Other Applications.~~

~~Communications wires and cables and CATV-type coaxial cables shall be separated at least 50 mm (2 in.) from conductors of any electric light, power, Class 1, non-power-limited fire alarm, or medium-power network-powered broadband communications circuits.~~

~~*Exception No. 1: Separation shall not be required where either (1) all of the conductors of electric light, power, Class 1, non-power-limited fire alarm, and medium-power network-powered broadband communications circuits are in a raceway or in metal-sheathed, metal-clad, nonmetallic-sheathed, Type AC, or Type UF cables, or (2) all of the communications wires and cables and all of the CATV-type coaxial cables are encased in raceway.*~~

~~*Exception No. 2: Separation shall not be required where the communications wires and cables and CATV-type coaxial cables are permanently separated from the conductors of electric light, power, Class 1, non-power-limited fire alarm, and medium-power network-powered broadband communications circuits by a continuous and firmly fixed nonconductor, such as porcelain tubes or flexible tubing, in addition to the insulation on the wire.*~~

~~**(C)** Support of Communications Wires and Cables and CATV-Type Coaxial Cables.~~

~~Raceways shall be used for their intended purpose. Communications wires and cables and CATV-type coaxial cables shall not be strapped, taped, or attached by any means to the exterior of any raceway as a means of support.~~

~~*Exception: Overhead (aerial) spans of communications drop wires, communications cables, and CATV-type coaxial cables shall be permitted to be attached to the exterior of a raceway-type mast intended for the attachment and support of such wires and cables.*~~

~~**794.246** Installation of Network-Powered Broadband Communications Cables and Equipment.~~

~~Cable and equipment installations within buildings shall comply with 794.246(A) through 794.246(C), as applicable.~~

~~**(A)** Separation of Conductors.~~

~~**(1)** In Raceways, Cable Trays, Boxes, Enclosures, and Cable Routing Assemblies.~~

(a) ~~*Low- and Medium-Power Network-Powered Broadband Communications Circuit Cables.* Low- and medium-power network-powered broadband communications cables shall be permitted in the same raceway, cable tray, box, enclosure, or cable routing assembly.~~

(b) ~~*Low-Power Network-Powered Broadband Communications Circuit Cables with Other Circuits.* Low-power network-powered broadband communications cables shall be permitted in the same raceway, cable tray, box, enclosure, or cable routing assembly with jacketed cables of any of the following circuits:~~

(3) ~~Class 2 and Class 3 remote-control, signaling, and power-limited circuits in compliance with Article 725, Parts I and II~~

(4) ~~Power-limited fire alarm systems in compliance with Article 760, Parts I and III~~

(5) ~~Communications circuits in compliance with Article 805, Parts I and IV~~

(6) ~~Nonconductive and conductive optical fiber cables in compliance with Article 770, Parts I and V~~

(7) ~~Community antenna television and radio distribution systems in compliance with Article 820, Parts I and V~~

(h) ~~*Medium-Power Network-Powered Broadband Communications Circuit Cables with Optical Fiber Cables and Other Communications Cables.* Medium-power network-powered broadband communications cables shall not be permitted in the same raceway, cable tray, box, enclosure, or cable routing assembly with conductors of any of the following circuits:~~

(9) ~~Communications circuits in compliance with Article 805, Parts I and IV~~

(10) ~~Conductive optical fiber cables in compliance with Article 770, Parts I and V~~

(11) ~~Community antenna television and radio distribution systems in compliance with Article 820, Parts I and V~~

(l) ~~*Medium-Power Network-Powered Broadband Communications Circuit Cables with Other Circuits.* Medium-power network-powered broadband communications cables shall not be permitted in the same raceway, cable tray, box, enclosure, or cable routing assembly with conductors of any of the following circuits:~~

(13) ~~Class 2 and Class 3 remote-control, signaling, and power-limited circuits in compliance with Article 725, Parts I and II~~

(14) ~~Power-limited fire alarm systems in compliance with Article 760, Parts I and III~~

(o) ~~*Electric Light, Power, Class 1, Nonpowered Broadband Communications Circuit Cables.* Network-powered broadband communications cable shall not be placed in any raceway, cable tray, compartment, outlet box, junction box, or similar fittings with conductors of electric light, power, Class 1, or non-power-limited fire alarm circuit cables.~~

~~*Exception No. 1:* *Network-powered broadband communications cable shall be permitted to be placed in a raceway, cable tray, compartment, outlet box, junction box, or similar fittings with conductors of electric light, power, Class 1, or non-power-limited fire alarm circuit cables where all of the conductors of electric light, power, Class 1, non-power-limited fire alarm circuits are separated from all of the network-powered broadband communications cables by a permanent barrier or listed divider.*~~

~~*Exception No. 2:* *Where power circuit conductors in outlet boxes, junction boxes, or similar fittings or compartments where such conductors are introduced solely for power supply to the network-powered broadband communications system distribution equipment, the power circuit conductors shall be routed within the enclosure to maintain a minimum 6 mm (¾ in.) separation from network-powered broadband communications cables.*~~

~~**(2)** Other Applications.~~

~~Network-powered broadband communications cable shall be separated at least 50 mm (2 in.) from conductors of any electric light, power, Class 1, and non-power-limited fire alarm circuits.~~

~~*Exception No. 1:* *Separation shall not be required where: (1) all of the conductors of electric light, power, Class 1, and non-power-limited fire alarm circuits are in a raceway or in metal-sheathed, metal-clad, nonmetallic-sheathed, Type AC, or Type UF cables, or (2) all of the network-powered broadband communications cables are encased in a raceway.*~~

~~*Exception No. 2:* *Separation shall not be required where the network-powered broadband communications cables are permanently separated from the conductors of electric light, power, Class 1, and non-power-limited fire alarm circuits by a continuous and firmly fixed nonconductor, such as porcelain tubes or flexible tubing, in addition to the insulation on the wire.*~~

~~**(B)** Support of Network-Powered Broadband Communications Cables.~~

~~Raceways shall be used for their intended purpose. Network-powered broadband communications cables shall not be strapped, taped, or attached by any means to the exterior of any conduit or raceway as a means of support.~~

~~**(C)** Splicing of Medium-Powered Network-Powered Communications Cables.~~

~~Where a medium-powered network-powered broadband communications cable is spliced or extended, a listed junction box or listed patch panel shall be used.~~

~~**794.248** Bends.~~

~~Bends in network broadband cable shall be made so as not to damage the cable. The radius of the curve of the inner edge of any bend shall not be less than 10 times the diameter of the cable.~~

~~Informational Note: See ANSI/TIA-568.0-E, *Generic Telecommunications Cabling for Customer Premises*, for information on bend radii of network broadband cable during different types of installation conditions.~~

~~**Part III.** Applications~~

~~**794.320** Applications of Listed PLFA Cables.~~

~~PLFA cables shall comply with the requirements described in Table 794.320 or where cable substitutions are made as shown in 794.157. Where substitute cables are installed, the wiring requirements of Article 760, Parts I and III, shall apply. Types FPLP-CI, FPLR-CI, and FPL-CI cables shall be permitted to be installed to provide 2-hour circuit integrity rated cables.~~

~~Table 794.320 Applications of Listed PLFA Cables in Buildings~~
~~- Cable Type Applications FPLP & FPLP-CI FPLR & FPLR-CI FPL & FPL-CI In fabricated ducts as described in 300.25(B) In fabricated ducts Y* N N In metal raceway that complies with 300.25(B) Y* Y* Y* In other spaces used for environmental air as described in 300.25(C) In other spaces used for environmental air Y* N N In metal raceway that complies with 300.25(C) Y* Y* Y* In plenum communications raceways Y* N N In plenum cable routing assemblies Y* N N Supported by open metal cable trays Y* N N Supported by solid bottom metal cable trays with solid metal covers Y* Y* Y* In risers In vertical runs Y* Y* N - In metal raceways Y* Y* Y* - In fireproof shafts Y* Y* Y* - In plenum communications raceways Y* Y* N - In plenum cable routing assemblies Y* Y* N - In riser communications raceways Y* Y* N - In riser cable routing assemblies Y* Y* N - In one- and two-family dwellings Y* Y* Y* Within buildings in other than air-handling spaces and risers General Y* Y* Y* Supported by cable trays Y* Y* Y* - In any raceway~~

~~recognized in Chapter 3 Y* Y* Y* - In plenum communications raceway Y* Y* Y* - In plenum cable routing assemblies Y* Y* Y* - In riser communications raceways Y* Y* Y* - In riser cable routing assemblies Y* Y* Y* - In general-purpose communications raceways Y* Y* Y* - In general-purpose cable routing assemblies Y* Y* Y*~~

~~Note:~~

~~"N" indicates that the cable type shall not be permitted to be installed in the application.~~

~~"Y*" indicates that the cable type shall be permitted to be installed in the application subject to the limitations described in 760.133 through 760.145.~~

~~**794.330** Applications of Listed Optical Fiber Cables.~~

~~Permitted and nonpermitted applications of listed optical fiber cables shall be as indicated in Table 794.330(a) . The permitted applications shall be subject to the installation requirements of 794.330 and 794.233 . The substitutions for optical fiber cables in Table 794.330(b) and illustrated in Figure 794.330 shall be permitted.~~

~~Table 794.330(a) Applications of Listed Optical Fiber Cables in Buildings~~

~~Listed Optical Fiber Cable Type Applications OFNP, OFCP OFNR, OFCR OFNG, OFCG, OFN, OFC In ducts specifically fabricated for environmental air as described in 300.25(B) In fabricated ducts Y* N N In metal raceway that complies with 300.25(B) Y* Y* Y* In other spaces used for environmental air (plenums) as described in 300.25(C) In other spaces used for environmental air Y* N N In metal raceway that complies with 300.25(C) Y* Y* Y* In plenum communications raceways Y* N N In plenum cable routing assemblies Y* N N Supported by open metal cable trays Y* N N Supported by solid bottom metal cable trays with solid metal covers Y* Y* Y* In risers In vertical runs Y* Y* N In metal raceways Y* Y* Y* In fireproof shafts Y* Y* Y* In plenum communications raceways Y* Y* N In plenum cable routing assemblies Y* Y* N In riser communications raceways Y* Y* N In riser cable routing assemblies Y* Y* N In one- and two-family dwellings Y* Y* Y* Within buildings in other than air-handling spaces and risers General Y* Y* Y* Supported by cable trays Y* Y* Y* In distributing frames and cross-connect arrays Y* Y* Y* In any raceway recognized in Chapter 3 Y* Y* Y* In plenum communications raceway Y* Y* Y* In plenum cable routing assemblies Y* Y* Y* In riser communications raceways Y* Y* Y* In riser cable routing assemblies Y* Y* Y* In general-purpose communications raceways Y* Y* Y* In general-purpose cable routing assemblies Y* Y* Y*~~

~~Note: "N" indicates that the cable type shall not be permitted to be installed in the application. "Y*" indicates that the cable type shall be permitted to be installed in the application subject to the limitations described in 770.110 and 770.113.~~

~~Informational Note No. 1: Article 770, Part V of covers installation methods within buildings. Table 794.330(a) covers the applications of listed optical fiber cables in buildings. The definition of *point of entrance* is in Article 100.~~

~~Informational Note No. 2: For information on the restrictions to the installation of optical fiber cables in ducts specifically fabricated for environmental air, see 770.113(B).~~

~~Table 794.330(b) Cable Substitutions~~

~~Cable Type Permitted Substitutions OFNP None OFCP OFNP OFNR OFNP OFCR OFNP, OFCP, OFNR OFNG, OFN OFNP, OFNR OFCG, OFC OFNP, OFCP, OFNR, OFCR, OFNG, OFN~~

~~**Figure 794.330 Cable Substitution Hierarchy.**~~

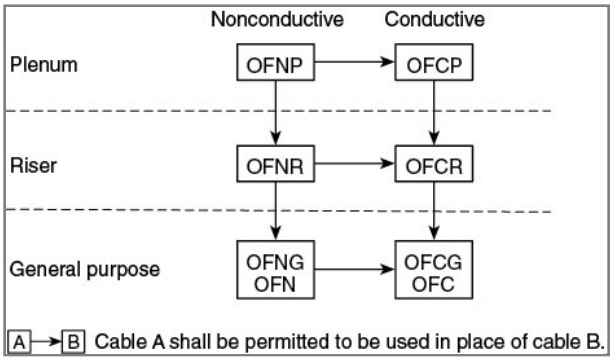

~~**794.340** Applications of Listed Communications Wires, Cables, and Raceways, and Listed Cable Routing Assemblies.~~

~~Permitted and nonpermitted applications of listed communications wires, cables, coaxial cables, network-powered broadband communications system cables and raceways, and listed cable routing assemblies shall be in accordance with one of the following:~~

(1) ~~Listed communications wires and cables as indicated in Table 794.340(a)~~

(2) ~~Listed communications raceways as indicated in Table 794.340(b)~~

(3) ~~Listed cable routing assemblies as indicated in Table 794.340(c)~~

~~The permitted applications shall be subject to the installation requirements of 794.240 and 794.242 .~~

~~Table 794.340(a) Applications of Listed Communications Wires, Cables, Listed Optical Fiber Cables, Listed CATV-type Coaxial Cables, and Listed Network-Powered Broadband Communications Cables in Buildings~~

~~Applications Wire and Cable Type Plenum Riser BMR General-Purpose BM Limited-Use Undercarpet BMU, BLU Hybrid Power and Communications Cables Communications Wires In ducts specifically fabricated for environmental air as described in 300.25(B) In fabricated ducts Y N N N N N N N N N In metal raceway that complies with 300.25(B) Y Y Y Y Y Y N N N Y In other spaces used for environmental air (plenums) as described in 300.25(C) In other spaces used for environmental air Y N N N N N N N N N In metal raceway that complies with 300.25(C) Y Y Y Y Y Y N N N Y In plenum communications raceways Y N N N N N N N N N In plenum cable routing assemblies Y N N N N N N N N N Supported by open metal cable trays Y N N N N N N N N N Supported by solid bottom metal cable trays with solid metal covers Y Y Y Y Y Y N N N N In risers In vertical runs Y Y Y N N N N N N N In metal raceways Y Y Y Y Y Y N N N N In fireproof shafts Y Y Y Y Y Y N N N N In plenum communications raceways Y Y N N N N N N N N In plenum cable routing assemblies Y Y N N N N N N N N In riser communications raceways Y Y N N N N N N N N In riser cable routing assemblies Y Y N N N N N N N N In one- and two-family dwellings Y Y Y Y Y Y N N Y N Within buildings in other than air-handling spaces and risers General Y Y Y Y Y Y N N N N In one- and two-family dwellings Y Y Y Y Y Y Y Y N Y N In multifamily dwellings Y Y Y Y Y Y Y N N N In nonconcealed spaces Y Y Y Y Y Y Y N N N Supported by cable trays Y Y Y Y Y N N N N N Under carpet, modular flooring, and planks N N N N N N Y N N N In distributing frames and cross-connect arrays Y Y N Y N N N N N Y In rigid metal conduit (RMC) and intermediate metal conduit (IMC) Y Y Y Y Y Y Y Y Y Y In any raceway recognized in Chapter 3 Y Y Y Y Y Y N N N Y In plenum communications raceways Y Y N Y N N N N N Y In plenum cable routing assemblies Y Y N Y N N N N N Y In riser communications raceways Y Y N Y N N N N N Y In riser cable routing assemblies Y Y N Y N N N N N Y In general-purpose communications raceways Y Y N Y N N N N N Y In general-purpose cable routing assemblies Y Y N Y N N N N N Y~~

~~Note: An "N" in the table indicates that the cable type shall not be installed in the application. A "Y" indicates that the cable type shall be permitted to be installed in the application subject to the limitations described in 800.113. The Riser column includes all riser cables except BMR, and the General-Purpose column includes all general-purpose cables except BM.~~

~~Informational Note No. 1: Article 800, Part IV covers installation methods within buildings. Table 794.340(a) covers the applications of listed communications wires, cables, and raceways in buildings.~~

Informational Note No. 2: See 800.113(B) for restrictions to the installation of communications cables in fabricated ducts.

Table 794.340(b) Applications of Listed Communications Raceways in Buildings

| Applications | Listed Communications Raceway Type | | |

~~**(B)** Nonconductive Cables in Raceway.~~

~~Unlisted nonconductive outside plant optical fiber cables shall be permitted to enter the building from the outside and shall be permitted to be installed in any of the following raceways:~~

(1) ~~Intermediate metal conduit (IMC)~~

(2) ~~Rigid metal conduit (RMC)~~

(3) ~~Rigid polyvinyl chloride conduit (PVC)~~

(4) ~~Electrical metallic tubing (EMT)~~

~~Unlisted nonconductive outside plant cables installed in rigid polyvinyl chloride conduit (PVC) or electrical metallic tubing (EMT) shall not be installed in risers, ducts used for environmental air, plenums used for environmental air, and other spaces used for environmental air.~~

~~**Part V.** Grounding~~

~~**794.600** Grounding.~~

~~Non-current-carrying conductive members of optical fiber cables shall be bonded to a grounded equipment rack or enclosure, or grounded in accordance with the grounding methods specified by 750.114(B) using a conductor specified in 750.114(A)~~ .

~~**DELETE ARTICLE 794**~~

-

Statement of Problem and Substantiation for Public Comment

Article 794 is redundant. It covers the same requirements as Article 722.

Related Public Comments for This Document

Related Comment	Relationship
Public Comment No. 126-NFPA 70-2024 [Article 790]	Deletes redundant Article.
Public Comment No. 768-NFPA 70-2024 [Article 770]	Deletes redundant Article.
Public Comment No. 126-NFPA 70-2024 [Article 790]	
Public Comment No. 768-NFPA 70-2024 [Article 770]	

Related Item

• Global FR-8611

Submitter Information Verification

Submitter Full Name: David Kiddoo
Organization: CCCA
Affiliation: Communications Cable & Connectivity Association
Street Address:
City:
State:
Zip:

Submittal Date: Sat Jul 20 07:14:05 EDT 2024
Committee: NEC-P03

Public Comment No. 856-NFPA 70-2024 [Section No. 794.1]

794.1 Scope.

This article covers the general requirements for the installation of single- and multiple-conductor cables used in Class 2 and Class 3 power-limited circuits, power-limited fire alarm (PLFA) circuits, Class 4 fault-managed power circuits, optical fiber cables, and communications systems power-limited, remote-control and signaling circuits that are not an integral part of a device or utilization equipment. The ~~circuits described herein are characterized by usage and electrical power limitations that differentiate them from electric light and power circuits; therefore, alternative requirements are given regarding minimum wire sizes, ampacity adjustment and correction factors, overcurrent protection, insulation requirements, and wiring methods and materials. The installation of fire alarm systems covers wiring and equipment including all circuits controlled and powered by the fire alarm system. The~~ general requirements for communications systems apply to communications circuits, community antenna television and radio distribution systems, network-powered broadband communications systems, and premises-powered broadband communications systems, unless modified by Articles 805, 810, 820, 830, or 840.

Informational Note No. 1: See 206.4 for classifications of remote-control and signaling circuits.

Informational Note No. 2: Class 4 fault-managed power systems consist of a Class 4 power transmitter and a Class 4 power receiver connected by a Class 4 cabling system. These systems are characterized by monitoring the circuit for faults and controlling the source current to ensure the energy delivered into any fault is limited. Class 4 systems differ from Class 1, Class 2, and Class 3 systems in that they are not limited for power delivered to an appropriate load. They are current limited for faults between the Class 4 transmitter and Class 4 receiver.

Informational Note No. 3: Fire alarm systems include fire detection and alarm notification, guard's tour, sprinkler waterflow, and sprinkler supervisory systems. Circuits controlled and powered by the fire alarm system include circuits for the control of building systems safety functions, elevator capture, elevator shutdown, door release, smoke doors and damper control, fire doors and damper control, and fan shutdown, but only where these circuits are powered by and controlled by the fire alarm system.

Informational Note No. 4: See *NFPA 72*-2025, *National Fire Alarm and Signaling Code*, for further information on the installation and monitoring for integrity requirements for fire alarm systems.

Informational Note No. 5: The circuits described in this article are characterized by usage and electrical power limitations that differentiate them from electric light and power circuits; therefore, different requirements are given regarding minimum conductor sizes, ampacity adjustment and correction factors, overcurrent protection, insulation requirements, and wiring methods and materials. The installation of fire alarm systems covers wiring and equipment including all circuits controlled and powered by the fire alarm system.

Statement of Problem and Substantiation for Public Comment

This comment seeks to reduce the unweildly size of the article scope by removing explanatory material and placing it into a 5th Informational Note. I personally do not see the value in the reloacted material at all and would rather have it deleted, but it certaily cannot remain within the scope. Small edits were also made, such as changing "alternative" to "different" to ensure that the code user does not beleive this article to be an alternative to the requirements of other articles. It is not an alternative set of requirements, it is a different set of requirements.

Related Item

- FR 8611

Submitter Information Verification

Submitter Full Name: Ryan Jackson
Organization: Self-employed
Street Address:
City:
State:
Zip:

Submittal Date: Tue Aug 06 16:41:34 EDT 2024
Committee: NEC-P03

Public Comment No. 1983-NFPA 70-2024 [Section No. 794.204(B)]

(B) Use of Class 2-LP or Class 3-LP Cables to Transmit Power and Data.

Type CL3P-LP, Type CL2P-LP, Type CL3R-LP, Type CL2R-LP, Type CL3-LP, or Type CL2-LP cables shall be permitted to supply power to equipment from a power source with a rated current per conductor up to the marked current limit located immediately following the suffix "-LP" and shall be permitted to transmit data to the equipment. Where the number of bundled LP cables is 192 or less and the selected ampacity of the cables in accordance with Table 792.204 exceeds the marked current limit of the cable, the ampacity determined from the table shall be permitted to be used. For ambient temperatures above 30°C (86°F), the correction factors of Table 310.15(B)(1)(1) or Equation 310.15(B) shall apply. The Class 2-LP and Class 3-LP cables shall comply with the following, as applicable:

(1) Cables with the suffix "-LP" shall be permitted to be installed in bundles, raceways, cable trays, communications raceways, and cable routing assemblies.

(2) Cables with the suffix "-LP" and a marked current limit shall follow the substitution hierarchy of 722.135(E) for the cable type without the suffix "-LP" and without the marked current limit.

(3) System design shall be permitted by qualified persons under engineering supervision.

Informational Note: An example of the marking on a 23 AWG, 4-pair, Class 2 cable rated 75°C (167°F) with an LP current rating of 0.6 amperes per conductor is "CL2-LP(0.6A) 75°C 23 AWG 4-pair". See 722.179(A)(9).

Table 792.204 Ampacities of Each Conductor in Amperes in 4-Pair Class 2 or Class 3 Balanced Twisted-Pair Cables Based on Copper Conductors at an Ambient Temperature of 30°C (86°F) with All Conductors in All Cables Carrying Current, 60°C (140°F), 75°C (167°F), and 90°C (194°F) Rated Cables

	-	Maximum Number of 4-Pair Cables in a Bundle																	
	-	1–7			8–19			20–37			38–61			62–91			92–192		
	-	Temperature Rating			Temperature Rating			Temperature Rating			Temperature Rating			Temperature Rating			Temperature Rating		
AWG	60°C	75°C	90°C	60°C	75°C	90°C	60°C	75°C	90°C	60°C	75°C	90°C	60°C	75°C	90°C	60°C	75°C	90°C
26	1.00	1.23	1.42	0.71	0.87	1.02	0.55	0.68	0.78	0.46	0.57	0.67	0.45	0.55	0.64	NA	NA	NA
24	1.19	1.46	1.69	0.81	1.01	1.17	0.63	0.78	0.91	0.55	0.67	0.78	0.46	0.56	0.65	0.40	0.48	0.55
23	1.24	1.53	1.78	0.89	1.11	1.28	0.77	0.95	1.10	0.66	0.80	0.93	0.58	0.71	0.82	0.45	0.55	0.63
22	1.50	1.86	2.16	1.04	1.28	1.49	0.77	0.95	1.11	0.66	0.82	0.96	0.62	0.77	0.89	0.53	0.63	0.72

Notes:

1. For bundle sizes over 192 cables, or for conductor sizes smaller than 26 AWG, ampacities shall be permitted to be determined by qualified personnel under engineering supervision.

2. Where only half of the conductors in each cable are carrying current, the values in the table shall be permitted to be increased by a factor of 1.4.

Informational Note No. 1: Elevated cable temperatures can reduce a cable's data transmission performance. For information on practices for 4-pair balanced twisted pair cabling, see TIA-TSB-184-A and 6.4.7, 6.6.3, and Annex G of ANSI/TIA-568-C.2, which provide guidance on adjustments for operating temperatures between 20°C and 60°C.

Informational Note No. 2: The per-contact current rating of connectors can limit the maximum allowable current below the ampacity shown in Table 792.204.

Statement of Problem and Substantiation for Public Comment

This a rehash of PI 1145-NFPA 70-2023. The argument against the PI was:

"Removing the range adds a new complexity where a bundle of 7 can be interpreted to also be covered by a bundle of 19, or 37, or 192. The range makes it explicitly clear where a bundle falls with relation to the table. The title is Maximum Number of 4-Pair Cables in a Bundle. There is no mention of minimum size."

I am submitting this public comment because the Committee Statement included part of my proposed change in their rejection of the change. I will be submitting another public comment to propose another way to fix the issue with the poor design of the table, but given the fact that the CMP thought that Maximum was there and the CMP further believed that to be a title, this is the opportunity to make that happen.

Related Public Comments for This Document

Related Comment	Relationship
Public Comment No. 1998-NFPA 70-2024 [Section No. 794.204(B)]	
Public Comment No. 1998-NFPA 70-2024 [Section No. 794.204(B)]	

Related Item

- PI 1145-NFPA 70-2023

Submitter Information Verification

Submitter Full Name: Brandon Nelson
Organization: Minnesota Statewide LEA JATC
Street Address:
City:
State:
Zip:

Submittal Date: Wed Aug 28 14:04:32 EDT 2024
Committee: NEC-P03

Public Comment No. 1998-NFPA 70-2024 [Section No. 794.204(B)]

(B) Use of Class 2-LP or Class 3-LP Cables to Transmit Power and Data.

Type CL3P-LP, Type CL2P-LP, Type CL3R-LP, Type CL2R-LP, Type CL3-LP, or Type CL2-LP cables shall be permitted to supply power to equipment from a power source with a rated current per conductor up to the marked current limit located immediately following the suffix "-LP" and shall be permitted to transmit data to the equipment. Where the number of bundled LP cables is 192 or less and the selected ampacity of the cables in accordance with Table 792.204 exceeds the marked current limit of the cable, the ampacity determined from the table shall be permitted to be used. For ambient temperatures above 30°C (86°F), the correction factors of Table 310.15(B)(1)(1) or Equation 310.15(B) shall apply. The Class 2-LP and Class 3-LP cables shall comply with the following, as applicable:

(1) Cables with the suffix "-LP" shall be permitted to be installed in bundles, raceways, cable trays, communications raceways, and cable routing assemblies.

(2) Cables with the suffix "-LP" and a marked current limit shall follow the substitution hierarchy of 722.135(E) for the cable type without the suffix "-LP" and without the marked current limit.

(3) System design shall be permitted by qualified persons under engineering supervision.

Informational Note: An example of the marking on a 23 AWG, 4-pair, Class 2 cable rated 75°C (167°F) with an LP current rating of 0.6 amperes per conductor is "CL2-LP(0.6A) 75°C 23 AWG 4-pair". See 722.179(A)(9).

Table 792.204 Ampacities of Each Conductor in Amperes in 4-Pair Class 2 or Class 3 Balanced Twisted-Pair Cables Based on Copper Conductors at an Ambient Temperature of 30°C (86°F) with All Conductors in All Cables Carrying Current, 60°C (140°F), 75°C (167°F), and 90°C (194°F) Rated Cables

-	Number of 4-Pair Cables in a Bundle	-	1–7			8–19			20–37			38–61			62–91			92–192	
	-	Temperature Rating			Temperature Rating			Temperature Rating			Temperature Rating			Temperature Rating			Temperature Rating		
AWG	60°C	75°C	90°C	60°C	75°C	90°C	60°C	75°C	90°C	60°C	75°C	90°C	60°C	75°C	90°C	60°C	75°C	90°C
26	1.00	1.23	1.42	0.71	0.87	1.02	0.55	0.68	0.78	0.46	0.57	0.67	0.45	0.55	0.64	NA	NA	NA
24	1.19	1.46	1.69	0.81	1.01	1.17	0.63	0.78	0.91	0.55	0.67	0.78	0.46	0.56	0.65	0.40	0.48	0.55
23	1.24	1.53	1.78	0.89	1.11	1.28	0.77	0.95	1.10	0.66	0.80	0.93	0.58	0.71	0.82	0.45	0.55	0.63
22	1.50	1.86	2.16	1.04	1.28	1.49	0.77	0.95	1.11	0.66	0.82	0.96	0.62	0.77	0.89	0.53	0.63	0.72

Notes:

1. For bundle sizes over 192 cables, or for conductor sizes smaller than 26 AWG, ampacities shall be permitted to be determined by qualified personnel under engineering supervision.

2. Where only half of the conductors in each cable are carrying current, the values in the table shall be permitted to be increased by a factor of 1.4.

Informational Note No. 1: Elevated cable temperatures can reduce a cable's data transmission performance. For information on practices for 4-pair balanced twisted pair cabling, see TIA-TSB-184-A and 6.4.7, 6.6.3, and Annex G of ANSI/TIA-568-C.2, which provide guidance on adjustments for operating temperatures between 20°C and 60°C.

Informational Note No. 2: The per-contact current rating of connectors can limit the maximum allowable current below the ampacity shown in Table 792.204.

Additional Proposed Changes

File Name	Description	Approved
Table_725.144_as_submitted.jpg	The formatting appears to be messing up between the submission and the version on the following screen. This is a screenshot of what I am attempting to submit.	

Statement of Problem and Substantiation for Public Comment

This a rehash of PI 1145-NFPA 70-2023. The argument against the PI was:

"Removing the range adds a new complexity where a bundle of 7 can be interpreted to also be covered by a bundle of 19, or 37, or 192. The range makes it explicitly clear where a bundle falls with relation to the table. The title is Maximum Number of 4-Pair Cables in a Bundle. There is no mention of minimum size."

I am submitting a public comment because the argument against the acceptance was factually incorrect, and this is an attempt to address the issue of the poor design of the table cited in my previous PI. The design of this table has a flaw; this is one solution, and my other public comment is another. While I realize that this version will make the formatting difficult, this version makes it clear that the title of the table is not "Number of 4-Pair Cables in a Bundle." As the table is currently formatted it is unnecessarily complicated in that it appears that is the title of the table, rather than being tied to only the second row of the table. As such systems installers are frequently at a loss on how to use this table. This change should improve the usability of the table.

Related Public Comments for This Document

Related Comment	Relationship
Public Comment No. 1983-NFPA 70-2024 [Section No. 794.204(B)]	
Public Comment No. 1983-NFPA 70-2024 [Section No. 794.204(B)]	

Related Item

- PI 1145-NFPA 70-2023

Submitter Information Verification

Submitter Full Name: Brandon Nelson
Organization: Minnesota Statewide LEA JATC
Street Address:
City:
State:

Zip:
Submittal Date: Wed Aug 28 14:44:31 EDT 2024
Committee: NEC-P03

Table 792.204 Ampacities of Each Conductor in Amperes in 4-Pair Class 2 or Class 3 Balanced Twisted-Pair Cables Based on Copper Conductors at an Ambient Temperature of 30°C (86°F) with All Conductors in All Cables Carrying Current, 60°C (140°F), 75°C (167°F), and 90°C (194°F) Rated Cables

Number of 4-Pair Cables in a Bundle	1–7			8–19			20–37			38–61			62–91			92–192		
	Temperature Rating			Temperature Rating			Temperature Rating			Temperature Rating			Temperature Rating			Temperature Rating		
AWG	60°C	75°C	90°C	60°C	75°C	90°C	60°C	75°C	90°C	60°C	75°C	90°C	60°C	75°C	90°C	60°C	75°C	90°C
26	1.00	1.23	1.42	0.71	0.87	1.02	0.55	0.68	0.78	0.46	0.57	0.67	0.45	0.55	0.64	NA	NA	NA
24	1.19	1.46	1.69	0.81	1.01	1.17	0.63	0.78	0.91	0.55	0.67	0.78	0.46	0.56	0.65	0.40	0.48	0.55
23	1.24	1.53	1.78	0.89	1.11	1.28	0.77	0.95	1.10	0.66	0.80	0.93	0.58	0.71	0.82	0.45	0.55	0.63
22	1.50	1.86	2.16	1.04	1.28	1.49	0.77	0.95	1.11	0.66	0.82	0.96	0.62	0.77	0.89	0.53	0.63	0.72

Notes:

1. For bundle sizes over 192 cables, or for conductor sizes smaller than 26 AWG, ampacities shall be permitted to be determined by qualified personnel under engineering supervision.

DRAFT

Public Comment No. 1498-NFPA 70-2024 [Part II.]

Part II. ~~Listing and~~ Marking Requirements

Additional Proposed Changes

File Name	Description	Approved
Limited_Energy_Roster-2026_2nd_Draft.pdf	Limited-Energy Task Group Roster-2nd Draft	

Statement of Problem and Substantiation for Public Comment

This public comment is being submitted on behalf of the Limited-Energy Task Group (see attached roster) to delete “Listing and” from the title of Part II as the listing requirements are no longer located in Part II of Article 722.

Related Public Comments for This Document

Related Comment	Relationship
Public Comment No. 924-NFPA 70-2024 [New Section after 722.1]	RC creating new section 722.2 for listing requirements.

Related Item

- FCR-238

Submitter Information Verification

Submitter Full Name: Kyle Krueger
Organization: NECA
Affiliation: NECA
Street Address:
City:
State:
Zip:

Submittal Date: Fri Aug 23 15:40:58 EDT 2024
Committee: NEC-P03

Limited Energy Task Group [2nd Draft]					
No.	First Name	Last Name	Class.	Organization	Other Committees
1	Kyle	Krueger	[I/M]	NECA	NEC-Correlating Comittee CMP 3 NFPA 72-Correlating Committee
2	Ernie	Gallo	[U/T]	NEBScore	
3	Derrick	Atkins	[L]	Minneapolis Electrical JA	NEC-Correlating Committee CMP 5
4	Anthony	Tassone	[R/T]	UL Solutions	CMP 3 CMP 16
5	Chad	Jones	[M]	Cisco	CMP 3
6	Sam	Rokowski	[I/M]	Maddox Inc.	CMP 3
7	George	Bish	[M]	Amazon/Ring Protect Inc	CMP 16
8	Trevor	Bowmer	[U]	Telecom Consulting	NEC Correlating Committee CMP 16
9	Ronald	Tellas	[M]	CCCA	CMP 3 CMP 16
10	Tim	Mikloiche	[E]	IAEI	CMP 3
11	Ryan	Jackosn	[M]	Steel Tube Industry	CMP 3
12	Diana	Lettkeman	[M]	Dish	CMP 16
13	John	Kacperski	[L]	IBEW	CMP 16

Public Comment No. 160-NFPA 70-2024 [Sections Part II., 722.100, 722.102]

Sections Part II., 722.100, 722.102

~~**Part II.** Listing and Marking Requirements~~

~~**722.100** Listing of Limited-Energy and Communications Cables.~~

~~Cables installed in buildings shall be listed in accordance with 722.100(A)(1) through 722.100(A)(16) :~~

~~*Exception No. 1:* *Optical fiber cables that are installed in compliance with 722.168 shall not be required to be listed.*~~

~~*Exception No. 2:* *Cables installed in compliance with 800.48 shall not be required to be listed.*~~

~~**(A)** Listing of Cables.~~

~~Cables installed as wiring methods within buildings shall be listed as resistant to the spread of fire and other criteria in accordance with 722.100(A)(1) through 722.100(A)(16) :~~

~~Informational Note No. 1: See UL 13, *Standard for Power-Limited Circuit Cables* , for applicable requirements for listing of Class 2 and Class 3 cable and power-limited tray cable (PLTC).~~

~~Informational Note No. 2: See UL 1424, *Cables for Power-Limited Fire-Alarm Circuits* , for applicable requirements for listing of power-limited fire alarm cable.~~

~~Informational Note No. 3: See UL 1651, *Optical Fiber Cable* , for applicable requirements for listing of optical fiber cable.~~

~~Informational Note No. 4: See UL 1400-2, *Outline for Fault-Managed Power Systems — Part 2: Requirements for Class 4 Cables* , for applicable requirements for listing of Class 4 cable.~~

~~**(1)** Plenum Cable.~~

~~Plenum cable shall be listed as suitable for use in ducts, plenums, and other space for environmental air and shall be listed as having adequate fire-resistant and low-smoke producing characteristics. Plenum cable types shall be identified in Table 722.102(A) .~~

~~Informational Note: See NFPA 262-2023, *Standard Method of Test for Flame Travel and Smoke of Wires and Cables for Use in Air-Handling Spaces* , for the test method used to determine that a cable is low-smoke producing and fire resistant, exhibiting a maximum peak optical density of 0.50 or less, an average optical density of 0.15 or less, and a maximum flame spread distance of 1.52 m (5 ft) or less.~~

~~**(2)** Riser Cable.~~

~~Riser cable shall be listed as suitable for use in a vertical run in a shaft or from floor to floor and shall be listed as having fire-resistant characteristics capable of preventing the carrying of fire from floor to floor.~~

~~Informational Note: See ANSI/UL 1666-2012, *Test for Flame Propagation Height of Electrical and Optical-Fiber Cable Installed Vertically in Shafts* , for the cable requirements defining fire-resistant characteristics capable of preventing the carrying of fire from floor to floor.~~

~~**(3)** General-Purpose Cable.~~

~~General-purpose cable shall be listed as resistant to the spread of fire and as suitable for general-purpose use, except for use in risers, ducts, plenums, and other space used for environmental air.~~

~~Informational Note: See UL 2556, *Wire and Cable Test Methods* , for defining *resistant to the spread of fire* . One method is to demonstrate that the cables do not spread fire to the top of the tray in the UL Flame Exposure, Vertical Tray Flame Test. The smoke measurements in the test method are not applicable. A method of defining *resistant to the spread of fire* is for the damage (char length) not to exceed 1.5 m (4 ft 11 in.) when performing the FT4 Vertical Flame Test.~~

~~**(4)** Alternative General-Purpose Cable.~~

~~Alternative general-purpose optical fiber cable shall be listed as suitable for general-purpose use, with the exception of risers and plenums, and shall also be resistant to the spread of fire.~~

~~Informational Note: See CSA C22.2 No. 0.3-M-2001, *Test Methods for Electrical Wires and Cables* , for the CSA Vertical Flame Test — cables in cable trays, that can also be used to define *resistant to the spread of fire* when the damage (char length) does not exceed 1.5 m (4 ft 11 in.).~~

~~**(5)** Limited-Use Cable.~~

~~Limited-use cable shall be listed as suitable for use in dwellings and raceways and shall be listed as resistant to flame spread.~~

~~Informational Note: See ANSI/UL 2556, *Standard for Wire and Cable Test Methods* , for one method of determining that cable is resistant to flame spread by testing the cable to the FV-2/VW-1 test.~~

~~**(6)** Type PLTC.~~

~~Type PLTC nonmetallic-sheathed, power-limited tray cable shall be listed as being suitable for cable trays, resistant to the spread of fire, and sunlight- and moisture-resistant. Type PLTC cable used in a wet location shall be listed for use in wet locations and marked "wet" or "wet location."~~

~~Informational Note: See ANSI/UL 1685-2010, *Standard for Safety for Vertical-Tray Fire-Propagation and Smoke-Release Test for Electrical and Optical-Fiber Cables* , for the UL Flame Exposure, Vertical Tray Flame Test that is used to determine resistance to the spread of fire when cables do not spread fire to the top of the tray. The smoke measurements in the test method are not applicable. See CSA C22.2 No. 0.3-M-2001, *Test Methods for Electrical Wires and Cables* , for the CSA Vertical Flame Test — cables in cable trays that can also be used to define *resistant to the spread of fire* when the damage (char length) does not exceed 1.5 m (4 ft 11 in.).~~

(7) Circuit Integrity (CI) Cable, Fire-Resistive Cable System, or Electrical Circuit Protective System.

Cables that are used for survivability of critical circuits under fire conditions shall comply with 722.100(A)(7)(a) , 722.100(A)(7)(b) , or 722.100(A)(7)(c) :

Informational Note: See *NFPA 72* -2025, *National Fire Alarm and Signaling Code* , 12.4.3 and 12.4.4 for additional information on fire alarm CI cable, fire-resistive cable systems, or electrical circuit protective systems used for fire alarm circuits to comply with the survivability requirements to maintain the circuit's electrical function during fire conditions for a defined period of time.

(a) *CI Cables.* CI cables of the types specified in 722.100(A)(1) , 722.100(A)(2) , 722.100(A)(3) , 722.100(A)(4) , and 722.100(A)(6) and used for survivability of critical circuits shall be marked with the additional classification using the suffix "CI." To maintain its listed fire-resistive rating, CI cable shall only be installed in free air in accordance with 722.180(B) . CI cables shall only be permitted to be installed in a raceway where specifically listed and marked as part of a fire-resistive cable system as covered in 722.100(A)(7)(b) .

Informational Note: See UL 2196, *Fire Test for Circuit Integrity of Fire-Resistive Power, Instrumentation, Control and Data Cables* , and UL 1425, *Cables for Non–Power-Limited Fire-Alarm Circuits* , for information on establishing a rating for CI cable. The *UL Guide Information for Nonpower-limited Fire Alarm Circuits (FNHT)* contains information to identify the cable and its installation limitations to maintain the fire-resistive rating.

(b) *Fire-Resistive Cables.* Fire-resistive cables of the types specified in 722.100(A)(1) , 722.100(A)(2) , 722.100(A)(3) , 722.100(A)(4) , 722.100(A)(6) , and 722.100(A)(7)(a) that are part of a fire-resistive cable system shall be identified with the system identifier and hourly rating marked on the protectant or the smallest unit container and installed in accordance with the listing of the system.

Informational Note: See UL 2196, *Fire Test for Circuit Integrity of Fire-Resistive Power, Instrumentation, Control and Data Cables* , for information on establishing a rating for a fire-resistive cable system. The *UL Guide Information for Electrical Circuit Integrity Systems (FHIT)* contains information to identify the system and its installation limitations to maintain a minimum fire-resistive rating.

(c) *Electrical Circuit Protective System.* Protectants for cables of the types specified in 722.100(A)(1) , 722.100(A)(2) , 722.100(A)(3) , 722.100(A)(4) , and 722.100(A)(6) that are part of an electrical circuit protective system shall be identified with the protective system identifier and hourly rating marked on the protectant or the smallest unit container and installed in accordance with the listing of the protective system.

Informational Note: See UL 1724, *Fire Tests for Electrical Circuit Protective Systems* , for information on establishing a rating for an electrical circuit protective system. The *UL Guide Information for Electrical Circuit Integrity Systems (FHIT)* contains information to identify the system and its installation limitations to maintain the fire-resistive rating.

(8) Class 3 Single Conductors.

Class 3 single conductors used as other wiring within buildings shall be listed Type CL3 and shall not be smaller than 18 AWG.

Informational Note: See ANSI/UL 1685-2010, *Standard for Safety for Vertical-Tray Fire-Propagation and Smoke-Release Test for Electrical and Optical-Fiber Cables* , for the UL Flame Exposure, Vertical Tray Flame Test that is used to determine resistance to the spread of fire when cables do not spread fire to the top of the tray. The smoke measurements in the test method are not applicable. See CSA C22.2 No. 0.3-M-2001, *Test Methods for Electrical Wires and Cables* , for the CSA Vertical Flame Test — cables in cable trays that can also be used to define *resistant to the spread of fire* when the damage (char length) does not exceed 1.5 m (4 ft 11 in.).

(9) Limited Power (LP) Cable.

Class 2 and Class 3 LP cables shall be listed as suitable for carrying power and data up to a specified current limit for each conductor without exceeding the temperature rating of the cable. The cables shall be marked with the suffix "-LP (XXA)" where XXA designates the current limit in amperes per conductor.

Informational Note: An example of the marking on 23 AWG, 4-pair, Class 2 cable rated 75°C (167°F) with an LP current rating of 0.6 amperes per conductor is "CL2-LP (0.6A) 75°C 23 AWG 4-pair."

(10) Under-Carpet Cables.

Under-carpet cable shall be listed as suitable for use under carpet, floor covering, modular tiles, and planks.

Informational Note: See UL 444, *Standard for Safety for Communications Cables* , for the compressive loading test used to determine the suitability of cable for under-carpet use.

(11) Wet Locations.

Cable used in a wet location shall be listed for use in wet locations and be marked "wet" or "wet location" or have a moisture-impervious metal sheath.

(12) Field-Assembled Optical Fiber Cables.

Field-assembled optical fiber cable shall comply with 722.100(A)(12)(a) through 722.100(A)(12)(d) :

(1) The specific combination of jacket and optical fibers intended to be installed as a field-assembled optical fiber cable shall be one of the types in 722.100(A)(1) , 722.100(A)(2) , or 722.100(A)(3) and shall be marked in accordance with Table 722.102(A) :

(2) The jacket of a field-assembled optical fiber cable shall have a surface marking indicating the specific optical fibers with which it is identified for use.

(3) The optical fibers shall have a permanent marking, such as a marker tape, indicating the jacket with which they are identified for use.

(4) The jacket without fibers shall meet the listing requirements for communications raceways in 722.110 and 722.111 in accordance with the cable marking.

(13) Cables Containing Optical Fibers.

Composite optical fiber cables shall be listed as electrical cables based on the type of electrical conductors.

(14) Class 2 and Class 3 Cable Voltage and Temperature Ratings.

Class 2 cables shall have a voltage rating of not less than 150 volts. Class 3 cables shall have a voltage rating of not less than 300 volts. Class 2 and Class 3 cables shall have a temperature rating of not less than 60°C (140°F).

~~**(15)** Power-Limited Fire Alarm (PLFA) Cables.~~

~~PFLA cables shall comply with 722.100(A)(15)(a) through 722.100(A)(15)(d) :~~

(1) ~~Conductors for cables, other than coaxial cables, shall be solid or stranded copper. Coaxial cables shall be permitted to use 30 percent conductivity copper-covered steel center conductor wire.~~

(2) ~~The size of conductors in a multiconductor cable shall not be smaller than 26 AWG. Single conductors shall not be smaller than 18 AWG. Conductors of 26 AWG shall be permitted only where spliced with a connector listed as suitable for 26 AWG to 24 AWG or larger conductors that are terminated on equipment or where the 26 AWG conductors are terminated on equipment listed as suitable for 26 AWG conductors.~~

(3) ~~Cables shall have a voltage rating of not less than 300 volts.~~

(4) ~~Cables shall have a temperature rating of not less than 60°C (140°F).~~

~~**(16)** Class 4 Cable Construction.~~

(a) ~~*Sizes.* Conductors of sizes not smaller than 24 AWG shall be permitted to be used.~~

(b) ~~*Insulation.* Insulation on conductors shall be rated not less than 450 volts dc.~~

(c) ~~*Voltage Rating.* Cables shall have a voltage rating of not less than 450 volts dc. Voltage ratings shall not be marked on the cables.~~

(d) ~~*Temperature Rating.* Cables shall have a temperature rating of not less than 60°C (140°F).~~

~~**722.102** Marking of Listed Limited-Energy and Communications Cables.~~

~~**(A)** General.~~

~~Cables installed in buildings shall be marked in accordance with 722.102(A), and they shall be permitted to be marked in accordance with 722.102(B) :~~

~~Cables shall be durably marked on the surface in accordance with the following:~~

(1) ~~The AWG size or circular mil area shall be repeated at intervals not exceeding 610 mm (24 in.).~~

(2) ~~All other markings shall be repeated at intervals not exceeding 1.0 m (40 in.).~~

(3) ~~The proper type designation for the type of cable shall be marked in accordance with Table 722.102(A) :~~

(4) ~~The manufacturer's name, trademark, or other distinctive marking by which the organization responsible for the product can be readily identified shall be marked.~~

(5) ~~The AWG size or circular mil area shall be marked.~~

~~Informational Note No. 1: See Chapter 9, Table 8 for conductor area expressed in SI units for conductor sizes specified in AWG or circular mil area.~~

(6) ~~The temperature rating for a temperature rating exceeding 60°C (140°F) shall be marked.~~

~~Informational Note No. 2: A minimum temperature rating of 60°C (140°F) is assumed for cables not marked with a temperature rating.~~

(7) ~~Voltage ratings shall not be marked on the cables.~~

~~*Exception: Voltage markings shall be permitted where the cable has multiple listings, and a voltage marking is required for one or more of the listings.*~~

~~Informational Note No. 3: Voltage markings on cables could be misinterpreted to suggest that the cables may be suitable for Class 1 electric light and power applications.~~

~~Informational Note No. 4: Cable types are listed in descending order of fire resistance rating.~~

~~Table 722.102(A) Cable Type Markings~~

~~Cable Type Cable Marking Class 4 plenum cable CL4P Class 3 plenum cable CL3P Class 2 plenum cable CL2P Power-limited fire alarm plenum cable FPLP Nonconductive optical fiber plenum cable OFNP Conductive optical fiber plenum cable OFCP Class 4 riser cable CL4R Class 3 riser cable CL3R Class 2 riser cable CL2R Power-limited fire alarm riser cable FPLR Nonconductive optical fiber riser cable OFNR Conductive optical fiber riser cable OFCR Class 4 general-purpose cable CL4 Class 3 general-purpose cable CL3 Class 2 general-purpose cable CL2 Class 4 outdoor-only use cable CL4Z Power-limited fire alarm cable FPL Nonconductive general-purpose optical fiber cable OFN Conductive general-purpose optical fiber cable OFC Alternative nonconductive general-purpose optical fiber cable OFNG Alternative conductive general-purpose optical fiber cable OFCG Class 3 cable — limited use CL3X Class 2 cable — limited use CL2X Under-carpet cable CMUC~~

~~Note: All types of CL2, CL3, CL4, and FPL cables containing optical fibers are provided with the suffix "-OF."~~

~~**(B)** Optional Markings.~~

~~Cables shall be permitted to be surface marked to indicate special characteristics of the cable materials.~~

~~Informational Note No. 1: Examples of these characteristics include, but are not limited to, limited smoke, halogen free, low smoke and halogen free, and sunlight resistant.~~

~~Informational Note No. 2: Some examples of optional markings are ST1 to indicate limited smoke characteristics. See UL 2556, *Wire and Cable Test Methods* , HF to indicate halogen free. See in UL 2885, *Outline of Investigation for Acid Gas, Acidity and Conductivity of Combusted Materials* , and LSHF to indicate halogen free and low-smoke characteristics. See IEC 61034-2, *Measurement of smoke density of cables burning under defined conditions — Part 2: Test procedure and requirements* .~~

Statement of Problem and Substantiation for Public Comment

This PC deletes 722.100 and 722.102. It is a companion comment to PC127 which moves all the listing requirements to new 722.2.

Related Public Comments for This Document

Related Comment	Relationship
Public Comment No. 127-NFPA 70-2024 [New Section after 722.1]	Moves listing requirements to comply with Style Manual

Related Item

- FCR-238

Submitter Information Verification

Submitter Full Name: David Kiddoo
Organization: CCCA
Affiliation: Communications Cable & Connectivity Association
Street Address:
City:
State:
Zip:
Submittal Date: Tue Jul 23 09:23:46 EDT 2024
Committee: NEC-P03

Public Comment No. 327-NFPA 70-2024 [Global Input]

CMP 1 has deleted the definition for "In Sight From", and the requirements that were part of that definition are now located in 110.29. This global Correlating Committee Note directs all CMP's to review occurrences of the phrase "in sight from", "within sight from", and "within sight" and consider whether references to 110.29 or 110.39 should be included.

Additional Proposed Changes

File Name	Description	Approved
CN_26.pdf	NEC_CN26	✓

Statement of Problem and Substantiation for Public Comment

NOTE: The following CC Note No. 26 appeared in the First Draft Report on First Revision No. 9187.

CMP 1 has deleted the definition for "In Sight From", and the requirements that were part of that definition are now located in 110.29. This global Correlating Committee Note directs all CMP's to review occurrences of the phrase "in sight from", "within sight from", and "within sight" and consider whether references to 110.29 or 110.39 should be included.

Related Item

- First Revision No. 9187

Submitter Information Verification

Submitter Full Name: CC Notes
Organization: NEC Correlating Committee
Street Address:
City:
State:
Zip:
Submittal Date: Mon Jul 29 17:05:29 EDT 2024
Committee: NEC-P01

Copyright Assignment

I, CC Notes, hereby irrevocably grant and assign to the National Fire Protection Association (NFPA) all and full rights in copyright in this Public Comment (including both the Proposed Change and the Statement of Problem and Substantiation). I understand and intend that I acquire no rights, including rights as a joint author, in any publication of the NFPA in which this Public Comment in this or another similar or derivative form is used. I hereby warrant that I am the author of this Public Comment and that I have full power and authority to enter into this copyright assignment.

☑ By checking this box I affirm that I am CC Notes, and I agree to be legally bound by the above Copyright Assignment and the terms and conditions contained therein. I understand and intend that, by checking this box, I am creating an electronic signature that will, upon my submission of this form, have the same legal force and effect as a handwritten signature

Correlating Committee Note No. 26-NFPA 70-2024 [Global Input]

Submitter Information Verification

Committee: NEC-AAC

Submittal Date: Tue May 07 14:23:07 EDT 2024

Committee Statement and Meeting Notes

Committee Statement: CMP 1 has deleted the definition for “In Sight From”, and the requirements that were part of that definition are now located in 110.29. This global Correlating Committee Note directs all CMP’s to review occurrences of the phrase “in sight from”, “within sight from”, and “within sight” and consider whether references to 110.29 or 110.39 should be included.

First Revision No. 9187-NFPA 70-2024 [Section No. 225.41]

Ballot Results

✔ **This item has passed ballot**

12 Eligible Voters
1 Not Returned
11 Affirmative All
0 Affirmative with Comments
0 Negative with Comments
0 Abstention

Not Returned

McDaniel, Roger D.

Affirmative All

Ayer, Lawrence S.

Bowmer, Trevor N.

Hickman, Palmer L.

Holub, Richard A.

Jackson, Peter D.

Kendall, David H.

Manche, Alan

Osborne, Robert D.

Porter, Christine T.

Schultheis, Timothy James

Williams, David A.

Public Comment No. 443-NFPA 70-2024 [Global Input]

The Correlating Committee directs all Code-Making Panels to verify cross-references to Article 200 are accurate due to the renumbering of the article.

Additional Proposed Changes

File Name	Description	Approved
CN_84.pdf		✓

Statement of Problem and Substantiation for Public Comment

NOTE: The following CC Note No. 84 appeared in the First Draft Report.

The Correlating Committee directs all Code-Making Panels to verify cross-references to Article 200 are accurate due to the renumbering of the article.

Related Item

• Correlating Committee Note No. 84

Submitter Information Verification

Submitter Full Name: CC Notes
Organization: NEC Correlating Committee
Street Address:
City:
State:
Zip:
Submittal Date: Tue Jul 30 17:35:49 EDT 2024
Committee: NEC-P05

Copyright Assignment

I, CC Notes, hereby irrevocably grant and assign to the National Fire Protection Association (NFPA) all and full rights in copyright in this Public Comment (including both the Proposed Change and the Statement of Problem and Substantiation). I understand and intend that I acquire no rights, including rights as a joint author, in any publication of the NFPA in which this Public Comment in this or another similar or derivative form is used. I hereby warrant that I am the author of this Public Comment and that I have full power and authority to enter into this copyright assignment.

☑ By checking this box I affirm that I am CC Notes, and I agree to be legally bound by the above Copyright Assignment and the terms and conditions contained therein. I understand and intend that, by checking this box, I am creating an electronic signature that will, upon my submission of this form, have the same legal force and effect as a handwritten signature

Correlating Committee Note No. 84-NFPA 70-2024 [Global Input]

Submitter Information Verification

Committee: NEC-AAC
Submittal Date: Wed May 08 08:49:53 EDT 2024

Committee Statement

Committee Statement: The Correlating Committee directs all Code-Making Panels to verify cross-references to Article 200 are accurate due to the renumbering of the article.

Ballot Results

✔ **This item has passed ballot**

12 Eligible Voters
1 Not Returned
11 Affirmative All
0 Affirmative with Comments
0 Negative with Comments
0 Abstention

Not Returned

McDaniel, Roger D.

Affirmative All

Ayer, Lawrence S.
Bowmer, Trevor N.
Hickman, Palmer L.
Holub, Richard A.
Jackson, Peter D.
Kendall, David H.
Manche, Alan
Osborne, Robert D.
Porter, Christine T.
Schultheis, Timothy James
Williams, David A.

Public Comment No. 504
Assigned to CMP-18, Referred to CMPs 1 - 17

Public Comment No. 504-NFPA 70-2024 [Global Input]

The Correlating Committee directs the CMPs to review the revision of the title of Article406 (Wiring Devices) and the new definition for the term "wiring device" in Article 100 forcorrelation of existing terminology using the newly define term in their articles.

Additional Proposed Changes

File Name	Description	Approved
CN_157.pdf		✓

Statement of Problem and Substantiation for Public Comment

NOTE: The following CC Note No. 157 appeared in the First Draft Report on First Revision No. 7965.

The Correlating Committee directs the CMPs to review the revision of the title of Article 406 (Wiring Devices) and the new definition for the term "wiring device" in Article 100 for correlation of existing terminology using the newly define term in their articles.

Related Item

- First Revision No. 7965

Submitter Information Verification

Submitter Full Name: CC Notes
Organization: NEC Correlating Committee
Street Address:
City:
State:
Zip:

Submittal Date: Tue Jul 30 22:29:14 EDT 2024
Committee: NEC-P18

Copyright Assignment

I, CC Notes, hereby irrevocably grant and assign to the National Fire Protection Association (NFPA) all and full rights in copyright in this Public Comment (including both the Proposed Change and the Statement of Problem and Substantiation). I understand and intend that I acquire no rights, including rights as a joint author, in any publication of the NFPA in which this Public Comment in this or another similar or derivative form is used. I hereby warrant that I am the author of this Public Comment and that I have full power and authority to enter into this copyright assignment.

☑ By checking this box I affirm that I am CC Notes, and I agree to be legally bound by the above Copyright Assignment and the terms and conditions contained therein. I understand and intend that, by checking this box, I am creating an electronic signature that will, upon my submission of this form, have the same legal force and effect as a handwritten signature

Correlating Committee Note No. 157-NFPA 70-2024 [Global Input]

Submitter Information Verification

Committee: NEC-AAC

Submittal Date: Thu May 09 08:59:03 EDT 2024

Committee Statement and Meeting Notes

Committee Statement: The Correlating Committee directs the CMPs to review the revision of the title of Article 406 (Wiring Devices) and the new definition for the term "wiring device" in Article 100 for correlation of existing terminology using the newly define term in their articles.

First Revision No. 7965-NFPA 70-2024 [New Definition after Definition: Wireways, Nonmetallic. (No...]

Ballot Results

✔ **This item has passed ballot**

12 Eligible Voters
1 Not Returned
11 Affirmative All
0 Affirmative with Comments
0 Negative with Comments
0 Abstention

Not Returned

McDaniel, Roger D.

Affirmative All

Ayer, Lawrence S.

Bowmer, Trevor N.

Hickman, Palmer L.

Holub, Richard A.

Jackson, Peter D.

Kendall, David H.

Manche, Alan

Osborne, Robert D.

Porter, Christine T.

Schultheis, Timothy James

Williams, David A.

Public Comment No. 527-NFPA 70-2024 [Global Input]

The CMPs are directed to review references to Article 220 in the articles under their purview and make necessary revisions based on Article 220 being relocated to Article120.

Additional Proposed Changes

File Name	Description	Approved
CN_212.pdf		✓

Statement of Problem and Substantiation for Public Comment

NOTE: The following CC Note No. 212 appeared in the First Draft Report.

The CMPs are directed to review references to Article 220 in the articles under their purview and make necessary revisions based on Article 220 being relocated to Article 120.

Related Item

• Correlating Committee Note No. 212

Submitter Information Verification

Submitter Full Name: CC Notes
Organization: NEC Correlating Committee
Street Address:
City:
State:
Zip:
Submittal Date: Tue Jul 30 23:08:41 EDT 2024
Committee: NEC-P02

Copyright Assignment

I, CC Notes, hereby irrevocably grant and assign to the National Fire Protection Association (NFPA) all and full rights in copyright in this Public Comment (including both the Proposed Change and the Statement of Problem and Substantiation). I understand and intend that I acquire no rights, including rights as a joint author, in any publication of the NFPA in which this Public Comment in this or another similar or derivative form is used. I hereby warrant that I am the author of this Public Comment and that I have full power and authority to enter into this copyright assignment.

☑ By checking this box I affirm that I am CC Notes, and I agree to be legally bound by the above Copyright Assignment and the terms and conditions contained therein. I understand and intend that, by checking this box, I am creating an electronic signature that will, upon my submission of this form, have the same legal force and effect as a handwritten signature

Correlating Committee Note No. 212-NFPA 70-2024 [Global Input]

Submitter Information Verification

Committee: NEC-AAC

Submittal Date: Thu May 09 11:53:08 EDT 2024

Committee Statement and Meeting Notes

Committee Statement: The CMPs are directed to review references to Article 220 in the articles under their purview and make necessary revisions based on Article 220 being relocated to Article 120.

Ballot Results

✔ **This item has passed ballot**

12 Eligible Voters
1 Not Returned
11 Affirmative All
0 Affirmative with Comments
0 Negative with Comments
0 Abstention

Not Returned

McDaniel, Roger D.

Affirmative All

Ayer, Lawrence S.

Bowmer, Trevor N.

Hickman, Palmer L.

Holub, Richard A.

Jackson, Peter D.

Kendall, David H.

Manche, Alan

Osborne, Robert D.

Porter, Christine T.

Schultheis, Timothy James

Williams, David A.

Public Comment No. 649-NFPA 70-2024 [Global Input]

Delete the words, "to be installed" everywhere they appear in the First Draft.

Statement of Problem and Substantiation for Public Comment

The term "to be installed" is always redundant. 90.2(C) says, "This code covers the installation and removal of electrical conductors, equipment, and raceways...". Every requirement of the NEC is about installation or removal (and requirements about removal are a very small minority). "Shall be permitted" and "shall not be permitted," as applied to equipment, mean that the subject equipment either is or is not allowed to be installed.
The new First Draft restrictions on reconditioned equipment seem to have overlooked the scope and purpose of the NEC. Adding the superfluous term "to be installed" also does not conform to 3.1.1, 3.1.2, and 3.5.1.1 of the NEC Style Manual.

Related Item

• FR-9197 • FR-9236 • FR-7868 • PI-3713 • FR-8938 • FR-7970 • FR-8831 • FR-8941 • FR-8944 • FR-8947 • FR-7925 • FR-7585 • FR-8136 • FR-8148 • FR-8984 • FR-8293 • FR-8362 • FR-8348 • FR-8360 • FR-7614 • FR-7658 • FR-7734 • FR-7746 • FR-8150 • FR-7717

Submitter Information Verification

Submitter Full Name: William Fiske
Organization: Intertek Testing Services
Street Address:
City:
State:
Zip:
Submittal Date: Fri Aug 02 09:19:44 EDT 2024
Committee: NEC-P01

Copyright Assignment

I, William Fiske, hereby irrevocably grant and assign to the National Fire Protection Association (NFPA) all and full rights in copyright in this Public Comment (including both the Proposed Change and the Statement of Problem and Substantiation). I understand and intend that I acquire no rights, including rights as a joint author, in any publication of the NFPA in which this Public Comment in this or another similar or derivative form is used. I hereby warrant that I am the author of this Public Comment and that I have full power and authority to enter into this copyright assignment.

☑ By checking this box I affirm that I am William Fiske, and I agree to be legally bound by the above Copyright Assignment and the terms and conditions contained therein. I understand and intend that, by checking this box, I am creating an electronic signature that will, upon my submission of this form, have the same legal force and effect as a handwritten signature