Second Revision No. 21-NFPA 54-2025 [Global Input]

See attached ~~word~~ Word document for changes to chapter 5 ~~related to~~ on the NFPA Manual of Style ~~Task Group~~ .

Supplemental Information

File Name	Description	Approved
54-2024_editorial_review_Chapter_5_SD_For_Revision.docx	Prod: See attached Word document on changes for chapter 5. The sections will most likely need some form of renumbering. Additionally sections that are not being revised are not shown.	
54_Global_SR-21_editorial_review_Chapter_5_SD_For_Revision.docx	For prod use	
54_Global_SR-21_editorial_review_Chapter_5_SD_For_Revision_for_ballot.docx	For ballot	

Submitter Information Verification

Committee: NFG-AAA

Submittal Date: Fri Oct 10 10:41:31 EDT 2025

Committee Statement

Committee Statement: The changes are bringing chapter 5 in-line with the Manual of Style.

Response Message: SR-21-NFPA 54-2025

Public Comment No. 26-NFPA 54-2025 [Global Input]

Important Notice: This document is the copyright property of the National Fire Protection Association (NFPA), Copyright © 2025 NFPA, and may not be used for any other purpose or distributed to any other persons or parties.

5.1.2.1

When additional appliances are being connected to a gas piping system, the existing piping shall be checked to determine whether it has the required capacity.

5.1.2.2

If the existing pipe does not have the capacity to supply the additional appliances, one or more of the following modifications shall be made to provide required minimum gas pressures to each appliance:

(1) The existing system is enlarged as required.

(2) Additional gas piping is provided.

(3) The gas pressure is increased within the limitations of the existing piping system and connected appliances.

5.3.1* General Considerations.

Gas piping systems shall be sized and installed such that both of the following are met:

(1) The supply of gas meets the maximum demand.

(2) Gas is supplied to each appliance inlet at not less than the minimum supply pressure required by the appliance.

5.5.1.1 Acceptable Materials.

Materials used for piping systems shall either comply with this chapter or be approved .

5.5.1.2 Used Materials.

Pipe, fittings, valves, or other materials shall not be used again unless they are free of foreign materials and have been approved for the intended service.

5.5.2.2 Steel, Stainless Steel, and Wrought Iron.
5.5.2.2.1
Steel, stainless steel, and wrought-iron pipe shall be at least Schedule 10.

5.5.2.2.2
Steel, stainless steel, and wrought-iron pipe shall comply with the dimensional standards of ANSI/ASME B36.10M, *Welded and Seamless Wrought Steel Pipe,* and one of the following:

(1) ASTM A53/A53M, *Standard Specification for Pipe, Steel, Black and Hot-Dipped, Zinc-Coated, Welded and Seamless*

(2) ASTM A106/A106M, *Standard Specification for Seamless Carbon Steel Pipe for High-Temperature Service*

(3) ASTM A312/A312M, *Standard Specification for Seamless, Welded, and Heavily Cold Worked Austenitic Stainless Steel Pipes*

5.5.2.5 Aluminum Alloy.

5.5.2.5.1
Aluminum alloy pipe shall comply with ASTM B241/B241M, *Standard Specification for Aluminum and Aluminum-Alloy Seamless Pipe and Seamless Extruded Tube,* except as provided in 5.5.2.5.2.

5.5.2.5.2
Alloy 5456, in accordance with ASTM B241, *Standard Specification for Aluminum and Aluminum-Alloy Seamless Pipe and Seamless Extruded Tube,* shall be prohibited.

5.5.2.5.3
Aluminum alloy pipe shall be marked at each end of each length to indicate compliance with 5.5.2.5.1.

Important Notice: This document is the copyright property of the National Fire Protection Association (NFPA), Copyright © 2025 NFPA, and may not be used for any other purpose or distributed to any other persons or parties.

5.5.2.5.4
Aluminum alloy pipe shall be coated to protect against external corrosion where it is in contact with masonry, plaster, or insulation or is subject to repeated wettings by water, detergents, or sewage.

5.5.3.1 Compatibility.

Tubing shall not be used with gases corrosive to the tubing material.

5.5.3.4* Copper and Copper Alloy.

5.5.3.4.1
Copper and copper alloy tubing shall not be used if the gas contains more than an average of 0.3 grains of hydrogen sulfide per 100 scf of gas (0.7 mg/100 L).

5.5.3.4.2
Copper tubing shall comply with standard Type K or Type L of ASTM B88, *Standard Specification for Seamless Copper Water Tube,* or ASTM B280, *Standard Specification for Seamless Copper Tube for Air Conditioning and Refrigeration Field Service*.

5.5.3.5 Aluminum.

5.5.3.5.1
Aluminum alloy tubing shall comply with ASTM B210/B210M, *Standard Specification for Aluminum and Aluminum-Alloy Drawn Seamless Tubes,* or ASTM B241/B241M*, Standard Specification for Aluminum and Aluminum-Alloy Seamless Pipe and Seamless Extruded Tube.*

5.5.3.5.2
Alloy 5456, in accordance with ASTM B241, *Standard Specification for Aluminum and Aluminum-Alloy Seamless Pipe and Seamless Extruded Tube,* shall be prohibited.

5.5.3.5.3
Aluminum alloy tubing shall be coated to protect against external corrosion where it is in contact with masonry, plaster, or insulation or is subject to repeated wettings by water, detergent, or sewage.

5.5.3.5.4
Aluminum alloy tubing shall not be used in exterior locations or underground.

5.5.4.1.1

Polyethylene plastic pipe, tubing, and fittings used to supply fuel gas shall conform to ASTM D2513, *Standard Specification for Polyethylene (PE) Gas Pressure Pipe, Tubing, and Fittings,* and be marked "gas" and "ASTM D2513."

5.5.4.1.3

Polyamide pipe, tubing, and fittings shall be identified in and conform to ASTM F2945, *Standard Specification for Polyamide 11 Gas Pressure Pipe, Tubing, and Fittings*, and be marked "gas" and "ASTM F2945."

5.5.4.2* Regulator Vent Piping.

5.5.4.2.1
Plastic pipe and fittings used to connect regulator vents to remote vent terminations shall be PVC conforming to UL 651, *Schedule 40, 80, Type EB and A Rigid PVC Conduit and Fittings*.

5.5.4.2.2
PVC vent piping shall not be installed indoors.

5.5.4.3 Anodeless Risers.

Anodeless risers shall comply with the following:

(1) Factory-assembled anodeless risers shall comply with the following:.

(a) They shall be recommended by the manufacturer for the gas used.

Important Notice: This document is the copyright property of the National Fire Protection Association (NFPA), Copyright © 2025 NFPA, and may not be used for any other purpose or distributed to any other persons or parties.

(b) They shall be leak tested by the manufacturer in accordance with written procedures.

(2) Service head adapters and field-assembled anodeless risers incorporating service head adapters shall comply with the following:.

(a) They shall be recommended by the manufacturer for the gas used.

(b) They shall be design-certified to meet the requirements of Category I of ASTM D2513, *Standard Specification for Polyethylene (PE) Gas Pressure Pipe, Tubing, and Fittings,* and 49 CFR 192.281(e).

(c) The manufacturer shall provide the user qualified installation instructions as prescribed by 49 CFR 192.283(b).

(3) The use of plastic pipe, tubing, and fittings in undiluted LP-Gas piping systems shall be in accordance with NFPA 58.

5.5.5 Workmanship and Defects.

Gas pipe, tubing, and fittings at the time of installation shall meet all of the following requirements:

(1) Gas pipe, tubing, and fittings shall be clear and free from cutting burrs and visible defects in structure or threading.

(2) Gas pipe, tubing, and fittings shall be cleaned to remove chip, scale, and debris.

(4) Pipe, tubing, and fittings with visible defects shall be replaced.

5.5.6.1 Specifications for Pipe Threads.

Metallic pipe and fitting threads shall be tapered pipe threads that comply with ANSI/ASME B1.20.1, *Pipe Threads, General Purpose, Inch.*

5.5.6.4.3

Thread joint sealing materials shall be nonhardening and resistant to the chemical constituents of the gases to be conducted through the piping.

5.5.7 Metallic Piping Joints and Fittings.

The type of piping joint used shall comply with all of the following:

(1) Be suitable for the pressure and temperature conditions

(2) Be selected considering joint tightness and mechanical strength under the service conditions

(3) Be able to sustain the maximum end forces inclusive of temperature expansion or contraction, vibration, fatigue, internal pressure, or the weight of the pipe and its contents

[5.5.7.1]
5.5.7.1.1

Pipe lighter than Schedule 40 shall be connected using press-connect fittings, flanges, brazing, or welding.

5.5.7.1.2

Where nonferrous pipe is brazed, the brazing materials shall have a melting point in excess of 1000°F (538°C) and contain not more than 0.05 percent phosphorus.

5.5.7.2 Copper Tubing Joints.

Important Notice: This document is the copyright property of the National Fire Protection Association (NFPA), Copyright © 2025 NFPA, and may not be used for any other purpose or distributed to any other persons or parties.

5.5.7.2.1
Copper tubing joints shall be in accordance with any of the following:

(1) Assembled with approved gas tubing fittings

(2) Brazed with a material having a melting point in excess of 1000°F (538°C) and containing not more than 0.05 percent phosphorus

(3) Assembled with press-connect fittings listed to CSA/ANSI LC 4/CSA 6.32, *Press-Connect Metallic Fittings for Use in Fuel Gas Distribution Systems*

5.5.7.3 Stainless Steel Tubing Joints.

5.5.7.3.1
Stainless steel joints shall be in accordance with any of the following:

(1) Welded
(2) Assembled with approved tubing fittings
(3) Brazed with a material having a melting point in excess of 1000°F (538°C)
(4) Assembled with press-connect fittings listed to CSA/ANSI LC 4/CSA 6.32, *Press-Connect Metallic Fittings for Use in Fuel Gas Distribution Systems*

5.5.7.3.2
Brazing alloys and fluxes for use on stainless steel alloys shall be recommended by the brazing alloy or flux manufacturer.

5.5.7.5 Metallic Pipe Fittings.

Metallic fittings shall comply with the following:

(1) Threaded fittings in sizes larger than 4 in. (100 mm) shall not be used.

(2) Fittings used with steel, stainless steel, or wrought-iron pipe shall be steel, stainless steel, copper alloy, malleable iron, or cast iron.

(3) Fittings used with copper or copper alloy pipe shall be copper or copper alloy.

(4) Fittings used with aluminum alloy pipe shall be aluminum alloy.

(5) Cast-iron fittings shall comply with the following:

(a) Flanges shall be permitted.

(b) Bushings shall not be used.

(c) Fittings shall not be used in systems containing flammable gas–air mixtures.

(d) Fittings in sizes 4 in. (100 mm) and larger shall not be used indoors unless approved.

(e) Fittings in sizes 6 in. (150 mm) and larger shall not be used unless approved.

(6) Threads for aluminum alloy fittings shall not form the joint seal.

(7) Zinc-aluminum alloy fittings shall not be used in systems containing flammable gas–air mixtures.

Important Notice: This document is the copyright property of the National Fire Protection Association (NFPA), Copyright © 2025 NFPA, and may not be used for any other purpose or distributed to any other persons or parties.

(8)Fittings such as couplings, proprietary-type joints, saddle tees, gland-type compression fittings, and flared, flareless, or compression-type tubing fittings shall comply with the following:

(a) Be used within the fitting manufacturer's pressure–temperature recommendations

(b) Be used within the service conditions anticipated with respect to vibration, fatigue, thermal expansion, or contraction

(c) Be acceptable to the authority having jurisdiction

(9*)* When pipe fittings are drilled and tapped in the field, the operation shall comply with Section 7.5.

5.5.9.1.2

Steel flanges shall comply with ANSI/ASME B16.5, *Pipe Flanges and Flanged Fittings: NPS ½ through NPS 24, Metric/Inch Standard*, or ANSI/ASME B16.47, *Large Diameter Steel Flanges: NPS 26, through NPS 60, Metric/Inch Standard*.

5.5.9.3* Flange Facings.

Where 150 psi (1034 kPa) steel flanges are bolted to Class 125 cast-iron flanges, the raised face on the steel flange shall be removed.

A.5.5.9.3
Standard facings are permitted for use under this code.

5.5.10 Flange Gaskets.

5.5.10.1*
The material for gaskets shall be capable of withstanding the design temperature and pressure of the piping system and the chemical constituents of the gas being conducted without change to its chemical and physical properties.

A.5.5.10.1
Acceptable materials can include the following:

(1) Metal (plain or corrugated)

(2) Composition

(3) Aluminum "O" rings

(4) Spiral-wound metal gaskets

(5) Rubber-faced phenolic

(6) Elastomeric

[Move text to A.5.5.10.1]5.5.10.2.2

Nonmetallic flange gaskets shall comply with ANSI/ASME B16.21, *Nonmetallic Flat Gaskets for Pipe Flanges*.

5.5.10.3

Full-face flange gaskets shall be used with all nonsteel flanges.

5.8.3.2

Important Notice: This document is the copyright property of the National Fire Protection Association (NFPA), Copyright © 2025 NFPA, and may not be used for any other purpose or distributed to any other persons or parties.

The devices in 5.8.3.1 shall be installed either as an integral part of the service or line pressure regulator or as separate units.

5.8.3.3
Where separate overpressure protection devices are installed, they shall comply with 5.8.4 through 5.8.9.

5.8.6 Setting.

Each pressure-limiting or pressure-relieving device shall be set so that the gas pressure supplied to the connected appliance(s) does not exceed the limits specified in 5.8.2.1 and 5.8.2.2.

5.8.8.1

The discharge stacks, vents, or outlet parts of all pressure-relieving and pressure-limiting devices shall be located so that gas is safely discharged to the outdoors.

5.8.8.2
Discharge stacks or vents shall be designed to prevent the entry of water, insects, or other foreign material that could cause blockage.

5.8.8. 3

The discharge stack or vent line shall be at least the same size as the outlet of the pressure-relieving device.

5.8.9 Size of Fittings, Pipe, and Openings.

The fittings, pipe, and openings located between the system to be protected and the pressure-relieving device shall be sized to prevent reduction of relief capacity.

5.9.2 Protective Devices.

Protective devices shall include, but not be limited to, the following:

(1) Check valves

(2) Three-way valves (of the type that completely closes one side before starting to open the other side)

(3) Reverse flow indicators controlling positive shutoff valves

(4) Normally closed air-actuated positive shutoff pressure regulators

5.11 Shutoff Valves. [Text moving to subs]

5.11.1
Shutoff valves shall be selected in accordance with Table 5.11.1.

Table 5.11.1 Manual Gas Valve Standards

Shutoff Valve Application	Valve Meeting the Following Standards
Appliance shutoff valve up to 1/2 psi	ANSI Z21.15/CSA 9.1 ANSI/ASME B16.44 ANSI/ASME B16.33 marked 125 G ANSI LC 4/CSA 6.32 ANSI/ASME B16.38
Valve up to 1/2 psi	ANSI/ASME B16.44 ANSI/ASME B16.33 marked 125 G ANSI LC 4/CSA 6.32 ANSI/ASME B16.38

Important Notice: This document is the copyright property of the National Fire Protection Association (NFPA), Copyright © 2025 NFPA, and may not be used for any other purpose or distributed to any other persons or parties.

Shutoff Valve Application	Valve Meeting the Following Standards
Valve up to 2 psi	ANSI/ASME B16.44 labeled 2G
	ANSI/ASME B16.33 marked 125 G
	ANSI LC 4/CSA 6.32 with ANSI/ASME B16.44 labeled 2G or labeled 5G
	ANSI LC 4/CSA 6.32 with ANSI/ASME B16.33 marked 125 G ANSI/ASME B16.38
Valve up to 5 psi	ANSI/ASME B16.44 labeled 5G
	ANSI/ASME B16.33
	ANSI LC 4/CSA 6.32 with ANSI/ASME B16.44 marked 5G
	ANSI LC 4/CSA 6.32 with ANSI/ASME B16.33 marked 125 G ANSI/ASME B16.38
Valve up to 125 psi	ANSI/ASME B16.33 marked 125 G
	ANSI LC 4/CSA 6.32 with ANSI/ASME B16.33 marked 125 G ANSI/ASME B16.38

For SI units, 1 psi gauge = 6.895 kPa.

5.11.2
Shutoff valves of size 1 in. (25 mm) National Pipe Thread and smaller shall be listed and labeled.

5.11.3

Shut-off valves used outdoors shall be recommended for outdoor use by the shutoff valve manufacturer.

5.12 Excess Flow Valve(s).

5.12.1

Where installed, automatic excess flow valves shall be listed in accordance with ANSI Z21.93/CSA 6.30, *Excess Flow Valves for Natural Gas and Propane Gas with Pressures Up to 5 psig*.

5.12.2
Where installed, excess flow valves shall be sized and installed in accordance with the manufacturers' instructions.

Second Revision No. 22-NFPA 54-2025 [Global Input]

See attached Word Document for changes to chapter ~~6 from~~ 6 on the Manual of Style~~- Task Group~~ .

Supplemental Information

File Name	Description	Approved
54-2024_editorial_review_Chapter_6_SD_For_Revision.docx	Prod: See attached Word document on changes for chapter 5. The sections will most likely need some form of renumbering. Additionally sections that are not being revised are not shown.	
54_Global_SR-22_editorial_review_Chapter_6_SD_For_Revision.docx	For prod use	
54_Global_SR-22_editorial_review_Chapter_6_SD_For_Revision_for_ballot.docx	For ballot	

Submitter Information Verification

Committee: NFG-AAA
Submittal Date: Fri Oct 10 10:48:01 EDT 2025

Committee Statement

Committee Statement: The changes are to align chapter 6 to the NFPA Manual of Style.
Response Message: SR-22-NFPA 54-2025

Public Comment No. 38-NFPA 54-2025 [Global Input]

Important Notice: This document is the copyright property of the National Fire Protection Association (NFPA), Copyright © 2025 NFPA, and may not be used for any other purpose or distributed to any other persons or parties.

Chapter 6 Pipe Sizing

6.1.4 Hybrid Pressure.

6.1.4.1
The pipe size for each section of higher pressure gas piping in a hybrid pressure system shall be determined using the longest length of piping from the point of delivery to the most remote line pressure regulator.

6.1.4.2
The pipe size from the line pressure regulator to each outlet in a hybrid pressure system shall be determined using the length of piping from the regulator to the most remote outlet served by the regulator.

.

6.2.1

Table 6.2.1(a) through Table 6.2.1(x) shall be used in conjunction with one of the methods described in 6.1.2 through 6.1.4 for piping materials other than noncorrugated stainless steel tubing.

Table 6.2.1(a) Schedule 40 Metallic Pipe

NA: A flow of less than 10 cfh.

Note: All table entries are rounded to three significant digits.

Table 6.2.1(b) Schedule 40 Metallic Pipe

NA: A flow of less than 10 cfh.

Note: All table entries are rounded to three significant digits.

Table 6.2.1(c) Schedule 40 Metallic Pipe

Note: All table entries are rounded to three significant digits.

Table 6.2.1(d) Schedule 40 Metallic Pipe

Note: All table entries are rounded to three significant digits.

Table 6.2.1(e) Schedule 40 Metallic Pipe

Note: All table entries are rounded to three significant digits.

Table 6.2.1(f) Schedule 40 Metallic Pipe

Note: All table entries are rounded to three significant digits.

Table 6.2.1(g) Semirigid Copper Tubing

NA: A flow of less than 10 cfh.

Note: All table entries are rounded to three significant digits.

*Table capacities are based on Type K copper tubing inside diameter (shown), which has the smallest inside diameter of the copper tubing products.

Table 6.2.1(h) Semirigid Copper Tubing

NA: A flow of less than 10 cfh.

Note: All table entries are rounded to three significant digits.

*Table capacities are based on Type K copper tubing inside diameter (shown), which has the smallest inside diameter of the copper tubing products.

Table 6.2.1(i) Semirigid Copper Tubing

NA: A flow of less than 10 cfh.

Note: All table entries are rounded to three significant digits.

Important Notice: This document is the copyright property of the National Fire Protection Association (NFPA), Copyright © 2025 NFPA, and may not be used for any other purpose or distributed to any other persons or parties.

*Table capacities are based on Type K copper tubing inside diameter (shown), which has the smallest inside diameter of the copper tubing products.

Table 6.2.1(j) Semirigid Copper Tubing

Note: All table entries are rounded to three significant digits.

*Table capacities are based on Type K copper tubing inside diameter (shown), which has the smallest inside diameter of the copper tubing products.

Table 6.2.1(k) Semirigid Copper Tubing

Note: All table entries are rounded to three significant digits.

*Table capacities are based on Type K copper tubing inside diameter (shown), which has the smallest inside diameter of the copper tubing products.

(2) All table entries are rounded to three significant digits.

Table 6.2.1(l) Corrugated Stainless Steel Tubing (CSST)

EHD: Equivalent hydraulic diameter. A measure of the relative hydraulic efficiency between different tubing sizes. The greater the value of EHD, the greater the gas capacity of the tubing.

Notes:

(1) Table does not include effect of pressure drop across the line regulator. Where regulator loss exceeds ¾ psi, do not use this table. Consult with regulator manufacturer for pressure drops and capacity factors. Pressure drops across a regulator can vary with flow rate.

(2) CAUTION: Capacities shown in table might exceed maximum capacity for a selected regulator. Consult with regulator or tubing manufacturer for guidance.

(3) Table includes losses for four 90-degree bends and two end fittings. Tubing runs with larger number of bends or fittings need to be increased by an equivalent length of tubing determined by the equation: $L = 1.3n$, where L is additional length (ft) of tubing and n is the number of additional fittings or bends.

(4) All table entries are rounded to three significant digits.

Table 6.2.1(m) Corrugated Stainless Steel Tubing (CSST)

EHD: Equivalent hydraulic diameter. A measure of the relative hydraulic efficiency between different tubing sizes. The greater the value of EHD, the greater the gas capacity of the tubing.

Notes:

(1) Table does not include effect of pressure drop across line regulator. Where regulator loss exceeds 1 psi, do not use this table. Consult with regulator manufacturer for pressure drops and capacity factors. Pressure drop across regulator can vary with the flow rate.

(2) CAUTION: Capacities shown in table might exceed maximum capacity of selected regulator. Consult with tubing manufacturer for guidance.

(3) Table includes losses for four 90-degree bends and two end fittings. Tubing runs with larger numbers of bends or fittings shall be increased by an equivalent length of tubing determined by the equation $L = 1.3n$, where L is additional length (ft) of tubing and n is the number of additional fittings or bends.

(4) All table entries are rounded to three significant digits.

Table 6.2.1(o) Corrugated Stainless Steel Tubing (CSST)

[…]

Notes:

(1) Table does not include effect of pressure drop across the line regulator. Where regulator loss exceeds ½ psi, do not use this table. Consult with regulator manufacturer for pressure drops and capacity factors. Pressure drops across a regulator can vary with flow rate.

(2) CAUTION: Capacities shown in table could exceed maximum capacity for a selected regulator. Consult with regulator or tubing manufacturer for guidance.

Important Notice: This document is the copyright property of the National Fire Protection Association (NFPA), Copyright © 2025 NFPA, and may not be used for any other purpose or distributed to any other persons or parties.

(3) Table includes losses for four 90-degree bends and two end fittings. Tubing runs with larger numbers of bends or fittings need to be increased by an equivalent length of tubing determined by the equation $L = 1.3n$, where L is additional length (ft) of tubing and n is the number of additional fittings or bends.
(4) All table entries are rounded to three significant digits.

Table 6.2.1(p) Corrugated Stainless Steel Tubing (CSST)
[…]
Notes:
(1) Table does not include effect of pressure drop across the line regulator. Where regulator loss exceeds 1 psi, do not use this table. Consult with regulator manufacturer for pressure drops and capacity factors. Pressure drop across a regulator can vary with flow rate.
(2) CAUTION: Capacities shown in table could exceed maximum capacity for a selected regulator. Consult with tubing manufacturer for guidance.
(3) Table includes losses for four 90-degree bends and two end fittings. Tubing runs with larger numbers of bends or fittings need to be increased by an equivalent length of tubing determined by the equation $L = 1.3n$, where L is additional length (ft) of tubing and n is the number of additional fittings or bends.
(4) All table entries are rounded to three significant digits.

Table 6.2.1(q) Polyethylene Plastic Pipe

Note: All table entries are rounded to three significant digits.

Table 6.2.1(r) Polyethylene Plastic Pipe

Note: All table entries are rounded to three significant digits.

Table 6.2.1(s) Polyethylene Plastic Pipe

Note: All table entries are rounded to three significant digits.

Table 6.2.1(t) Polyethylene Plastic Tubing

CTS: Copper tube size.

NA: A flow of less than 10 cfh.

Note: All table entries are rounded to three significant digits.

Table 6.2.1(u) Polyethylene Plastic Tubing

CTS: Copper tube size.

NA: A flow of less than 10 cfh.

Note: All table entries are rounded to three significant digits.

6.2.2

Section 6.4 shall be used in conjunction with one of the methods described in 6.1.2 through 6.1.4 for noncorrugated stainless steel tubing.

6.3.1

Table 6.3.1(a) through Table 6.3.1(m) shall be used in conjunction with one of the methods described in 6.1.2 through 6.1.4 for piping materials other than noncorrugated stainless steel tubing.

Table 6.3.1(a) Schedule 40 Metallic Pipe

Note: All table entries are rounded to three significant digits.

Table 6.3.1(b) Schedule 40 Metallic Pipe

Important Notice: This document is the copyright property of the National Fire Protection Association (NFPA), Copyright © 2025 NFPA, and may not be used for any other purpose or distributed to any other persons or parties.

Note: All table entries are rounded to three significant digits.

Table 6.3.1(c) Schedule 40 Metallic Pipe

Note: All table entries are rounded to three significant digits.

Table 6.3.1(d) Schedule 40 Metallic Pipe

Note: All table entries are rounded to three significant digits.

Table 6.3.1(e) Semirigid Copper Tubing

Note: All table entries are rounded to three significant digits.

*Table capacities are based on Type K copper tubing inside diameter (shown), which has the smallest inside diameter of the copper tubing products.

Table 6.3.1(f) Semirigid Copper Tubing

NA: A flow of less than 10,000 Btu/hr.

Note: All table entries are rounded to three significant digits.

*Table capacities are based on Type K copper tubing inside diameter (shown), which has the smallest inside diameter of the copper tubing products.

Table 6.3.1(g) Semirigid Copper Tubing

Note: All table entries are rounded to three significant digits.

*Table capacities are based on Type K copper tubing inside diameter (shown), which has the smallest inside diameter of the copper tubing products.

Table 6.3.1(h) Corrugated Stainless Steel Tubing (CSST)

EHD: Equivalent hydraulic diameter. A measure of the relative hydraulic efficiency between different tubing sizes. The greater the value of EHD, the greater the gas capacity of the tubing.

Notes:

(1) Table includes losses for four 90-degree bends and two end fittings. Tubing runs with larger numbers of bends or fittings need to be increased by an equivalent length of tubing determined by the equation: $L = 1.3n$, where L is additional length (ft) of tubing and n is the number of additional fittings or bends.

(2) All table entries are rounded to three significant digits.

Table 6.3.1(i) Corrugated Stainless Steel Tubing (CSST)

EHD: Equivalent hydraulic diameter. A measure of the relative hydraulic efficiency between different tubing sizes. The greater the value of EHD, the greater the gas capacity of the tubing.

Notes:

(1) Table does not include effect of pressure drop across the line regulator. Where regulator loss exceeds ½ psi based on 13 in. w.c. outlet pressure, do not use this table. Consult with regulator manufacturer for pressure drops and capacity factors. Pressure drops across a regulator can vary with flow rate.

(2) CAUTION: Capacities shown in table could exceed maximum capacity for a selected regulator. Consult with regulator or tubing manufacturer for guidance.

(3) Table includes losses for four 90-degree bends and two end fittings. Tubing runs with larger number of bends or fittings need to be increased by an equivalent length of tubing determined by the equation $L = 1.3n$, where L is additional length (ft) of tubing and n is the number of additional fittings or bends.

(4) All table entries are rounded to three significant digits.

Table 6.3.1(j) Corrugated Stainless Steel Tubing (CSST)

EHD: Equivalent hydraulic diameter. A measure of the relative hydraulic efficiency between different tubing sizes. The greater the value of EHD, the greater the gas capacity of the tubing.

Notes:

(1) Table does not include effect of pressure drop across the line regulator. Where regulator loss exceeds ½ psi based on 13 in. w.c. outlet pressure, do not use this table. Consult with regulator manufacturer for pressure drops and capacity factors. Pressure drops across a regulator can vary with flow rate.

Important Notice: This document is the copyright property of the National Fire Protection Association (NFPA), Copyright © 2025 NFPA, and may not be used for any other purpose or distributed to any other persons or parties.

(2) CAUTION: Capacities shown in table could exceed maximum capacity for a selected regulator. Consult with regulator or tubing manufacturer for guidance.

(3) Table includes losses for four 90-degree bends and two end fittings. Tubing runs with larger number of bends or fittings need to be increased by an equivalent length of tubing determined by the equation: $L = 1.3n$, where L is additional length (ft) of tubing and n is the number of additional fittings or bends.

(4) All table entries are rounded to three significant digits.

Table 6.3.1(k) Polyethylene Plastic Pipe

Note: All table entries are rounded to three significant digits.

Table 6.3.1(l) Polyethylene Plastic Pipe

Note: All table entries are rounded to three significant digits.

Table 6.3.1(m) Polyethylene Plastic Tubing

CTS: Copper tube size.

Note: All table entries are rounded to three significant digits.

6.3.2

Section 6.4 shall be used in conjunction with one of the methods described in 6.1.2 through 6.1.4 for noncorrugated stainless steel tubing.

6.4 Sizing Equations.

The inside diameter of smooth wall pipe or tubing shall be determined by the sizing equations in 6.4.1 and 6.4.2 using the equivalent pipe length determined by the methods in 6.1.2 through 6.1.4.

6.4.1* Low-Pressure Gas Formula.

For less than 1.5 psi (10.3 kPa), the following equation shall be used:

$$D = \frac{Q^{0.381}}{19.17\left(\frac{\Delta H}{Cr \times L}\right)^{0.206}} \quad \textbf{[6.4.1]}$$

where:

D = inside diameter of pipe (in.)

Q = input rate appliance(s) (cubic feet per hour at 60°F and 30 in. mercury column)

ΔH = pressure drop [in. w.c. (27.7 in. H_2O = 1 psi)]

Cr = viscosity, density, and temperature factors *(see Table 6.4.2 for values)*

L = equivalent length of pipe (ft)

6.4.2* High-Pressure Gas Formula.

For 1.5 psi (10.3 kPa) and above, the following equation shall be used:

$$D = \frac{Q^{0.381}}{18.93\left[\frac{\left(P_1^2 - P_2^2\right) \cdot Y}{Cr \times L}\right]^{0.206}} \quad \textbf{[6.4.2]}$$

where:

D = inside diameter of pipe (in.)

Q = input rate appliance(s) (cubic feet per hour at 60°F and 30 in. mercury column)

Important Notice: This document is the copyright property of the National Fire Protection Association (NFPA), Copyright © 2025 NFPA, and may not be used for any other purpose or distributed to any other persons or parties.

P_1 = upstream pressure [psia (P_1 + 14.7)]

P_2 = downstream pressure [psia (P_2 + 14.7)]

Y = superexpansibility factor *(see Table 6.4.2 for values)*

Cr = viscosity, density, and temperature factors *(see Table 6.4.2 for values)*

L = equivalent length of pipe (ft)

Table 6.4.2 *Cr* and *Y* for Natural Gas and Undiluted Propane at Standard Conditions

Gas	Formula Factors	
	Cr	***Y***
Natural gas	0.6094	0.9992
Undiluted propane	1.2462	0.9910

Second Revision No. 23-NFPA 54-2025 [Global Input]

See attached Word Document for changes to chapter ~~XX from~~ 7 on the Manual of Style~~ Task Group~~ .

Supplemental Information

File Name	Description	Approved
54-2024_editorial_review_Chapter_7_SD_For_Revision.docx	Prod: See attached Word document on changes for chapter 7. The sections will most likely need some form of renumbering. Additionally sections that are not being revised are not shown.	
54_Global_SR-23_editorial_review_Chapter_7_SD_For_Revision.docx	For prod use	
54_Global_SR-23_editorial_review_Chapter_7_SD_For_Revision_for_ballot.docx	For ballot	

Submitter Information Verification

Committee: NFG-AAA
Submittal Date: Fri Oct 10 10:50:11 EDT 2025

Committee Statement

Committee Statement: The changes are to align chapter 7 to the NFPA Manual of Style.
Response Message: SR-23-NFPA 54-2025

Public Comment No. 39-NFPA 54-2025 [Global Input]

Important Notice: This document is the copyright property of the National Fire Protection Association (NFPA), Copyright © 2025 NFPA, and may not be used for any other purpose or distributed to any other persons or parties.

Chapter 7 Gas Piping Installation

7.1.1.1

Underground gas piping shall be installed with clearance from any other underground structure to avoid contact therewith, to allow maintenance, and to protect against damage from proximity to other structures.

7.1.1.2

Underground plastic piping shall be installed with sufficient clearance or be insulated from any source of heat to prevent heat from impairing the serviceability of the pipe.

7.1.2 Protection Against Damage.

7.1.2.1 Piping Protection.
Means shall be provided to prevent excessive stressing of the piping where vehicular traffic is heavy or soil conditions are unstable and settling of piping or foundation walls could occur.

7.1.2.1.1*
Piping shall be buried or covered such that it is protected from physical damage.

A.7.1.2.1.1
Piping should be protected from physical damage where it passes through flower beds, shrub beds, and other cultivated areas where such damage could be expected.

7.1.2. 2 Cover Requirements.

Underground piping systems shall be installed with a minimum of 12 in. (300 mm) of cover.

7.1.2.2.1 The minimum cover shall be increased to 18 in. (460 mm) where external forces can cause damage to the pipe or tubing.
7.1.2.2.2*

Where a minimum of 12 in. (300 mm) of cover cannot be provided, the piping shall be installed in conduit.

7.1.2. 3 Trenches.

The trench shall be graded so that the pipe has a firm continuous bearing on the bottom of the trench.

7.1.2. 4 Backfilling.

Where flooding of the trench is done to consolidate the backfill, care shall be exercised to see that the pipe is not floated from its firm bearing on the trench bottom.

7.1.3* Corrosion Protection of Piping.

Steel pipe and steel tubing installed underground shall be installed in accordance with 7.1.3.1 through 7.1.3.13.

7.1.3.1

Zinc coating shall not be considered corrosion protection for underground gas piping.

7.1.3.2

Underground piping shall comply with one or more of the following unless approved technical justification is provided to demonstrate that protection is unnecessary:

(1) The piping shall be made of corrosion-resistant material suitable for the environment in which it will be installed.

(2) Pipe shall have a factory-applied, electrically insulating coating.

(3) Fittings and joints between sections of coated pipe shall be coated in accordance with the coating manufacturer's instructions.

(4) The piping shall have a cathodic protection system installed and maintained in accordance with 7.1.3.3 or 7.1.3.6.

Important Notice: This document is the copyright property of the National Fire Protection Association (NFPA), Copyright © 2025 NFPA, and may not be used for any other purpose or distributed to any other persons or parties.

7.1.3.3

1. Cathodic protection systems shall be monitored by testing.

.

7.1.3.4
Testing results for cathodic protection systems shall be documented.

7.1.3.5
The documented test results for cathodic protection systems shall demonstrate one of the following:

(1) A pipe-to-soil voltage of −0.85 volts or more negative is produced, with reference to a saturated copper-copper sulfate half cell

(2) A pipe-to-soil voltage of −0.78 volts or more negative is produced, with reference to a saturated KCl calomel half cell

(3) A pipe-to-soil voltage of −0.80 volts or more negative is produced, with reference to a silver-silver chloride half cell

(4) Compliance with a method described in 49 CFR 192, Appendix D

7.1.3. 6

Sacrificial anodes shall be tested in accordance with the following:

(1) Upon installation of the cathodic protection system except as provided in 7.1.3.6.1

(2) 12 to 18 months after the initial test

7.1.3.6.1
Where prohibited by climatic conditions, sacrificial anode testing shall be performed not later than 180 days after the installation of the cathodic protection system.

7.1.3.6.2
Upon successful verification testing in accordance with 7.1.3.6(1) and 7.1.3.6(2), periodic follow-up cathodic protection system testing shall be performed at intervals not to exceed 36 months.

7.1.3. 7

Cathodic protection systems that fail testing shall comply with the following:

(1) The system shall be repaired not more than 180 days after the date of the failed testing.

(2) The system testing schedule shall be restarted as required in 7.1.3.6(1) and 7.1.3.6(2)

(3) The results of the system testing shall comply with 7.1.3.5.

7.1.3. 10

Impressed current cathodic protection systems shall be inspected and tested in accordance with the following schedule:

(1) The impressed current rectifier voltage output shall be checked at intervals not exceeding two months.

(2) The pipe-to-soil voltage shall be tested at least annually.

7.1.3. 11

Documentation of the results of the two most recent tests shall be retained.

7.1.3. 12

Where dissimilar metals are joined underground, an insulating coupling or fitting shall be used.

Important Notice: This document is the copyright property of the National Fire Protection Association (NFPA), Copyright © 2025 NFPA, and may not be used for any other purpose or distributed to any other persons or parties.

7.1.3. 13

Steel risers, other than anodeless risers, connected to plastic piping shall be cathodically protected by means of a welded anode.

7.1.6 Piping Underground Beneath Buildings.

Where gas piping is installed underground beneath buildings, the piping shall be either of the following:

(1) Encased in an approved conduit designed to withstand the imposed loads and installed in accordance with 7.1.6.1 or 7.1.6.2

(2) A piping/encasement system listed for installation beneath buildings

7.1.6.1 Conduit with One End Terminating Outdoors.

7.1.6.1.1
Where a conduit has one end that terminates indoors, the conduit shall extend into an accessible portion of the building.

7.1.6.1.2
At the point where the conduit terminates in the building, the space between the conduit and the gas piping shall be sealed to prevent the entrance of any gas leakage.

7.1.6.1.3
Where the end sealing is of a type that retains the full pressure of the pipe, the conduit shall be designed for the same pressure as the pipe.

7.1.6.1.4
The outdoor end of the conduit shall comply with all of the following:

(1) Extend at least 4 in. (100 mm) outside the building
(2) Be vented outdoors above finished ground level
(3) Be installed to prevent the entrance of water and insects

7.1.6.2 Conduit with Both Ends Terminating Indoors.

7.1.6.2.1
Where a conduit originates and terminates within the same building, the conduit shall originate and terminate in an accessible portion of the building.

7.1.6.2.2
Where the conduit originates and terminates within the same building, the conduit shall not be sealed.

7.1.7 Plastic Piping.
7.1.7.1 Connection of Plastic Piping.

Plastic piping shall be installed outdoors, underground only, except as provided in 7.1.7.1.1 and 7.1.7.1.2.

7.1.7.1.1
Plastic piping shall be permitted to terminate aboveground where an anodeless riser is used.

7.1.7.1.2
Plastic piping shall be permitted to terminate with a wall head adapter aboveground in buildings, including basements, where the plastic piping is inserted in a piping material permitted for use in buildings.

7.1.7.2 Connections Between Metallic and Plastic Piping.

Connections made between metallic and plastic piping shall be made with fittings conforming to one of the following:

(1) ASTM D2513, *Standard Specification for Polyethylene (PE) Gas Pressure Pipe, Tubing, and Fittings*, for Category I transition fittings

Important Notice: This document is the copyright property of the National Fire Protection Association (NFPA), Copyright © 2025 NFPA, and may not be used for any other purpose or distributed to any other persons or parties.

(2) ASTM F1973, *Standard Specification for Factory Assembled Anodeless Risers and Transition Fittings in Polyethylene (PE) and Polyamide 11 (PA11) and Polyamide 12 (PA 12) Fuel Gas Distribution Systems*

(3) ASTM F2509, *Standard Specification for Field-Assembled Anodeless Riser Kits for Use on Outside Diameter Controlled Polyethylene Gas Distribution Pipe and Tubing*

7.1.7.3.2

Where tracer wire is used, either of the following shall apply:

(1) Access shall be provided from aboveground.
(2) One end of the tracer wire or tape shall be brought aboveground at a building wall or riser.

7.1.8 CSST Piping Systems.

CSST piping systems shall be installed in accordance with this code and the manufacturer's installation instructions.

7.2.1

Piping installed aboveground shall comply with all of the following:

(1) Piping shall be supported and located where it will be protected from physical damage.

(2) Where passing through an exterior wall, the piping shall also be protected from corrosion by coating or wrapping with an inert material approved for such applications.

(3) The piping shall be sealed around its circumference at the point of the exterior penetration to prevent the entry of water, insects, and rodents.

(4) Where piping is encased in a protective pipe sleeve, the annular spaces between the gas piping and the sleeve and between the sleeve and the wall opening shall be sealed.

(5) Piping installed outdoors shall be elevated not less than 3½ in. (89 mm) above the ground.

(6) Sealing materials shall be compatible with the piping and sleeve.

7.2.2* Protective Coating.

7.2.2.1
Where piping is in contact with a material or an atmosphere corrosive to the piping system, the piping and fittings shall be coated with a corrosion-resistant material.

7.2.2.2
Any corrosion-resistant coating used on piping or components shall not be considered as adding strength to the system.

7.2.6.1

Piping shall be supported with metal pipe hooks, metal pipe straps, metal bands, metal brackets, metal hangers, or building structural components that are designed for the piping, and located at intervals to prevent or damp out excessive vibration.

7.2.6.2
Piping shall be anchored to prevent strain on connected appliances and equipment.

7.2.6.3
Piping shall not be supported by other piping.

7.2.6.4

Important Notice: This document is the copyright property of the National Fire Protection Association (NFPA), Copyright © 2025 NFPA, and may not be used for any other purpose or distributed to any other persons or parties.

Pipe hangers and supports shall comply with ANSI/MSS SP-58, *Pipe Hangers and Supports — Materials, Design Manufacture, Selection, Application, and Installation.*

7.2.6. 5

Spacings of supports in gas piping installations shall not be greater than shown in Table 7.2.6.5.

Table 7.2.6.5 Support of Piping

Steel Pipe, Nominal Size of Pipe (in.)	Spacing of Supports (ft)	Nominal Size of Tubing Smooth Wall (in. O.D.)	Spacing of Supports (ft)
1/2	6	1/2	4
3/4 or 1	8	5/8 or 3/4	6
1 1/4 or larger (horizontal)	10	7/8 or 1 (horizontal)	8
1 1/4 or larger (vertical)	Every floor level	1 or larger (vertical)	Every floor level

For SI units, 1 ft = 0.305 m.

7.2.6. 6

Spacing of supports of CSST shall comply with the CSST manufacturer's instructions.

7.2.6. 7

Supports, hangers, and anchors shall be installed so they do not interfere with the free expansion and contraction of the piping between anchors.

7.2.6.8
All parts of a supporting system shall be designed and installed so they are not disengaged by movement of the supported piping.

7.2.6.5.1

Gas piping installed on the roof surfaces shall be supported in accordance with Table 7.2.6.5.

7.3.4 Tubing in Partitions.
7.3.4.1
Thissubsection shall not apply to locations where tubing pierces walls, floors, or partitions.

7.3.4.2
Tubing installed vertically or horizontally inside hollow walls or partitions without protection along its entire concealed length shall meet the following requirements:

(1) A steel striker barrier not less than 0.0508 in. (1.3 mm) thick, or equivalent, shall be installed between the tubing and the finished wall and extend at least 4 in. (100 mm) beyond concealed penetrations of plates, firestops, wall studs, and other members where fasteners could penetrate the tubing.

(2) The tubing shall be installed in single runs.

(3) The tubing shall not be rigidly secured.

7.3.5 Piping in Floors in Industrial Occupancies.

7.3.5.1

In industrial occupancies, gas piping in solid floors such as concrete shall be laid in channels in the floor and covered to permit access to the piping with minimum damage to the building.

7.3.5.2
Where piping in floor channels could be exposed to excessive moisture or corrosive substances, the piping shall be protected in an approved manner.

Important Notice: This document is the copyright property of the National Fire Protection Association (NFPA), Copyright © 2025 NFPA, and may not be used for any other purpose or distributed to any other persons or parties.

7.3.6 Other Occupancies.

Gas piping in nonindustrial occupancies shall not be embedded in concrete floor slabs unless in accordance with 7.3.6.1 through 7.3.6.5.

7.3.6.1

The installation of embedded gas piping shall be approved.

7.3.6.2

Embedded gas piping shall be surrounded with a minimum of 1½ in. (38 mm) of concrete.

7.3.6.3

Embedded gas piping shall not be in physical contact with other metallic structures such as reinforcing rods or electrically neutral conductors.

7.3.6.4

All piping, fittings, and risers shall be protected against corrosion in accordance with 7.2.2.

7.3.6.5

Piping shall not be embedded in concrete slabs containing quickset additives or cinder aggregate.

7.3. 7 Shutoff Valves in Tubing Systems.

Shutoff valves in tubing systems in concealed locations shall be rigidly supported independently of the tubing to prevent movement when operated.

7.4.1 Pressure Reduction.
7.4.1.1
Where pressure reduction is required in branch connections for compliance with 5.4.1, such reduction shall take place either inside the chase or immediately adjacent to the outside wall of the chase.

7.4.1.2
Regulator venting and downstream overpressure protection shall comply with 5.7.5 and Section 5.8.

7.4.1.3
The regulator shall be accessible for service and repair and be vented in accordance with one of the following:

(1) Where the fuel gas is lighter than air, either of the following shall apply:

a) Regulators equipped with a vent-limiting means shall be permitted to be vented into the chase.
b) Regulators not equipped with a vent-limiting means shall be permitted to be vented either directly to the outdoors or to a point within the top 1 ft (0.3 m) of the chase.

(2) Where the fuel gas is heavier than air, the regulator vent shall be vented only directly to the outdoors.

7.4.3* Ventilation.

7.4.3.1
A chase shall be ventilated to the outdoors and only at the top.

7.4.3.2
The ventilation opening(s) shall have a minimum free area [in square inches (square meters)] equal to the product of one-half of the maximum pressure in the piping [in pounds per square inch (kilopascals)] times the largest nominal diameter of that piping [in inches (millimeters)], or the cross-sectional area of the chase, whichever is smaller.

7.4.3.3
Where more than one fuel gas piping system is present, the free area for each system shall be calculated and the largest area used.

Important Notice: This document is the copyright property of the National Fire Protection Association (NFPA), Copyright © 2025 NFPA, and may not be used for any other purpose or distributed to any other persons or parties.

7.6.1 Metallic Pipe.

Metallic pipe bends shall comply with all of the following:

(1) Bends shall be made only with bending tools and procedures intended for that purpose.

(2) All bends shall be smooth and free from buckling, cracks, or other evidence of mechanical damage.

(3) The longitudinal weld of the pipe shall be near the neutral axis of the bend.

(4) Pipe shall not be bent through an arc of more than 90 degrees.

(5) The inside radius of a bend shall be not less than 6 times the outside diameter of the pipe.

7.6.2 Plastic Pipe.

Plastic pipe bends shall comply with all of the following:

(1) The pipe shall not be damaged.
(2) The internal diameter of the pipe shall not be effectively reduced.

(3) Joints shall not be located in pipe bends.

(4) The radius of the inner curve of such bends shall not be less than 25 times the inside diameter of the pipe.

(5) Where the piping manufacturer specifies the use of special bending tools or procedures, such tools or procedures shall be used.

7.7.1 Provide Drips Where Necessary.

7.7.1.1
For other than dry gas conditions, a drip shall be provided at any point in the line of pipe where condensate could collect.

7.7.1.2
Where required by the authority having jurisdiction or the gas supplier, a drip shall also be provided at the outlet of the meter.

7.7.1.3
A drip shall be installed to constitute a trap wherein an accumulation of condensate shuts off the flow of gas before it runs back into the meter.

7.7.2 Location of Drips.

7.7.2.1
All drips shall be located such that they are readily accessible to permit cleaning or emptying.

7.7.2.2
A drip shall not be located where the condensate can freeze.

7.8.1.1

The outlet fittings or piping shall be fastened to prevent movement.

7.8.1.6

The provisions of 7.8.1.4 and 7.8.1.5 shall not apply to listed quick-disconnect devices of the flush-mounted type or listed gas convenience outlets.

7.8.2.1

Each outlet, including a valve, shall be closed gastight with a threaded plug or cap immediately after installation and left closed until the appliance or equipment is connected except as permitted in 7.8.2.3 and 7.8.2.4.

7.8.2.2

Important Notice: This document is the copyright property of the National Fire Protection Association (NFPA), Copyright © 2025 NFPA, and may not be used for any other purpose or distributed to any other persons or parties.

When an appliance or equipment is disconnected from an outlet and the outlet is not to be used again immediately, it shall be capped or plugged gastight except as permitted in 7.8.2.3 and 7.8.2.4.

7.8.2.3
Laboratory appliances installed in accordance with 9.6.2(1) shall be permitted.

7.8.2.4
The use of a listed quick-disconnect device with integral shutoff or listed gas convenience outlet shall be permitted.

7.8.2.5

Appliance shutoff valves installed in fireplaces shall be removed and the piping capped gastight where the fireplace is used for solid-fuel burning.

7.9.2 Valves at Regulators.

7.9.2.1
An accessible gas shutoff valve shall be provided upstream of each gas pressure regulator except as provided in 7.9.2.2.

7.9.2.2
Where two gas pressure regulators are installed in series in a single gas line, a manual valve shall not be required at the second regulator.

7.9.3.1 Shutoff Valves for Multiple House Lines.

7.9.3.1.1
In multiple-tenant buildings supplied through a master meter, through one service regulator where a meter is not provided, or where meters or service regulators are not readily accessible from the appliance or equipment location, a readily accessible individual shutoff valve for each apartment or tenant line shall be provided.

7.9.3.1.2
In a common system serving a number of individual buildings, shutoff valves shall be installed at each building.

7.9.3.2 Emergency Shutoff Valves.

7.9.3.2.1
An exterior shutoff valve to permit turning off the gas supply to each building in an emergency shall be provided.

7.9.3.2.2
Emergency shutoff valves shall be identified "Emergency Shutoff Valve" and their locations posted as required by the authority having jurisdiction.

7.9.3.3 Shutoff Valve for Laboratories.

7.9.3.3.1
Each laboratory space containing two or more gas outlets installed on tables, benches, or in hoods in educational, research, commercial, and industrial occupancies shall have a single shutoff valve through which all such gas outlets are supplied.

7.9.3.3.2
The shutoff valve shall be accessible, located within the laboratory or adjacent to the laboratory's egress door, and identified.

7.13.2.3*

The length of the jumper between the connection to the gas piping system and the grounding electrode system shall not exceed 75 ft (22 m).

7.13.2.4
Any additional grounding electrodes installed to comply with 7.13.2.3 shall be bonded to the electrical service grounding electrode system or, where provided, lightning protection grounding electrode system.

7.13.2. 5

Important Notice: This document is the copyright property of the National Fire Protection Association (NFPA), Copyright © 2025 NFPA, and may not be used for any other purpose or distributed to any other persons or parties.

Bonding connections shall be in accordance with *NFPA 70*.

7.13.2. 6

Devices used for the bonding connection shall be listed for the application in accordance with UL 467, *Grounding and Bonding Equipment*.

7.14 Electrical Circuits.

7.14.1
Electrical circuits shall not utilize gas piping or components as conductors, except as provided in 7.14.2.

7.14.2
Low-voltage (50 V or less) control circuits, ignition circuits, and electronic flame detection device circuits shall be permitted to make use of piping or components as a part of an electric circuit.

Second Revision No. 24-NFPA 54-2025 [Global Input]

See attached Word Document for changes to chapter ~~8 from~~ 8 on the Manual of ~~Style Task Group"~~ Style

Supplemental Information

File Name	Description	Approved
54-2024_editorial_review_Chapter_8_SD_For_Revision.docx	Prod: See attached Word document on changes for chapter 8. The sections will most likely need some form of renumbering. Additionally sections that are not being revised are not shown.	
54_Global_SR-24_editorial_review_Chapter_8_SD_For_Revision.docx	For prod use	
54_Global_SR-24_editorial_review_Chapter_8_SD_For_Revision_for_ballot.docx	For ballot	

Submitter Information Verification

Committee: NFG-AAA

Submittal Date: Fri Oct 10 10:52:09 EDT 2025

Committee Statement

Committee Statement: The changes are to align chapter 8 to the NFPA Manual of Style.

Response Message: SR-24-NFPA 54-2025

Public Comment No. 40-NFPA 54-2025 [Global Input]

Important Notice: This document is the copyright property of the National Fire Protection Association (NFPA), Copyright © 2025 NFPA, and may not be used for any other purpose or distributed to any other persons or parties.

8.1.1.9

A valve shall not be subjected to the test pressure unless it can be determined that the valve, including the valve closing mechanism, is designed to withstand the pressure.

8.1.2 Test Medium.

8.1.2.1
The test medium shall be air, nitrogen, carbon dioxide, or an inert gas.

8.1.2.2
Oxygen shall not be used as a test medium.

8.1.3.4

Appliances and equipment that are not to be included in the test shall be either disconnected from the piping or isolated by blanks, blind flanges, or caps.

8.1.3.4.1
Flanged joints at which blinds are inserted to blank off other equipment during the test shall not be required to be tested.

8.1.3. 5

Where the piping system is connected to appliances or equipment designed for operating pressures less than the test pressure, such appliances or equipment shall be isolated from the piping system by disconnecting them and capping the outlet(s).

8.1.3. 6

Where the piping system is connected to appliances or equipment designed for operating pressures equal to or greater than the test pressure, such appliances or equipment shall be isolated from the piping system by closing the individual appliance or equipment shutoff valve(s).

8.1.3. 7

All testing of piping systems shall be performed in a manner that protects the safety of employees and the public during the test.

8.1.4.1
Test pressure shall be measured with a manometer or with a pressure measuring device designed and calibrated to read, record, or indicate a pressure loss due to leakage during the pressure test period.

8.1.4.2
The source of pressure shall be isolated before the pressure tests are made.

8.1.4.3
Mechanical gauges used to measure test pressures shall have a range such that the highest end of the scale is not greater than 5 times the test pressure.

8.1.4. 4

The test pressure to be used shall be no less than 1½ times the proposed maximum working pressure, but not less than 3 psi (20 kPa).

8.1.4.5
Where the test pressure exceeds 125 psi (862 kPa), the test pressure shall not exceed a value that produces a hoop stress in the piping greater than 50 percent of the specified minimum yield strength of the pipe.

8.1.4.6*

Test duration shall be not less than ½ hour for each 500 ft^3 (14 m^3) of pipe volume or fraction thereof.

Important Notice: This document is the copyright property of the National Fire Protection Association (NFPA), Copyright © 2025 NFPA, and may not be used for any other purpose or distributed to any other persons or parties.

8.1.4.7
When testing a system having a volume less than 10 ft^3 (0.28 m^3) or a system in a single-family dwelling, the test duration shall be a minimum of 10 minutes.

8.1.4.8
The duration of the test shall not be required to exceed 24 hours.

8.1.5.1

The piping system shall withstand the test pressure specified without showing any evidence of leakage or other defects.

8.1.5.2
Any reduction of test pressures as indicated by pressure gauges shall be considered indication of a leak unless such reduction can be attributed to some other cause.

8.1.5. 3

Leakage shall be located by means of a listed combustible gas detector, noncorrosive leak detection fluid, or other approved leak detection methods.

8.1.5. 4

Where leakage or other defects are located, the affected portion of the piping system shall be repaired or replaced and retested.

8.2.3* Leak Check.

8.2.3.1
Immediately after the gas is turned on into a new system or into a system that has been initially restored after an interruption of service, the piping system shall be checked for leakage.

8.2.3.2
Where leakage is indicated, the gas supply shall be shut off until the necessary repairs have been made.

Table 8.3.1 Size and Length of Piping

Nominal Piping Size (in.)	Length of Piping (ft)
≥2½ <3	> 50
≥3 <4	> 30
≥4 <6	> 15
≥6 <8	> 10
≥8	Any length

For SI units, 1 in. = 25.4 mm; 1 ft = 0.305 m.

Note: CSST EHD size of 62 is equivalent to 2 in. nominal size pipe or tubing.

8.3.1.1 Removal from Service.

8.3.1.1.1
Where existing gas piping is opened, the section that is opened shall be isolated from the gas supply and the line pressure vented in accordance with 8.3.1.3.

8.3.1.1.2
Where gas piping meeting the criteria of Table 8.3.1 is removed from service, the residual fuel gas in the piping shall be displaced with an inert gas.

8.3.1.2* Placing in Operation.
Where gas piping containing air and meeting the criteria of Table 8.3.1 is placed in operation, the following shall occur:

Important Notice: This document is the copyright property of the National Fire Protection Association (NFPA), Copyright © 2025 NFPA, and may not be used for any other purpose or distributed to any other persons or parties.

(1) The air in the piping shall first be displaced with an inert gas.

(2) The inert gas shall then be displaced with fuel gas in accordance with 8.3.1.3.

8.3.1.3 Outdoor Discharge of Purged Gases.

8.3.1.3.1
The open end of a piping system being pressure vented or purged shall discharge directly to an outdoor location.

8.3.1.3.2
Purging operations shall comply with all of the following requirements:

(1) The point of discharge shall be controlled with a shutoff valve.

(2) The point of discharge shall be located at least 10 ft (3.0 m) from sources of ignition, at least 10 ft (3.0 m) from building openings, and at least 25 ft (7.6 m) from mechanical air intake openings.

(3) During discharge, the open point of discharge shall be continuously attended and monitored with a combustible gas indicator that complies with 8.3.1.4.

(4) Purging operations introducing fuel gas shall be stopped when 90 percent fuel gas by volume is detected within the pipe.

(5) Persons not involved in the purging operations shall be evacuated from all areas within 10 ft (3.0 m) of the point of discharge.

8.3.1.4* Combustible Gas Indicator.

8.3.1.4.1
Combustible gas indicators shall be listed and calibrated in accordance with the manufacturer's instructions.

8.3.1.4.2
Combustible gas indicators shall numerically display a volume scale from 0 percent to 100 percent in 1 percent or smaller increments.

8.3.2.1* Purging Procedure.

The piping system shall be purged in accordance with one or more of the following:

(1) The piping shall be purged with fuel gas that is discharged outdoors.

(2) The piping shall be purged with fuel gas that is discharged indoors or outdoors through an appliance burner that has a continuous source of ignition and is not located in a combustion chamber.

(3) The piping shall be purged with fuel gas that is discharged indoors or outdoors through a burner that has a continuous source of ignition and that is designed for such purpose.

(4) The piping shall be purged with fuel gas that is discharged indoors or outdoors, as follows:

(a) The point of discharge shall be monitored with a listed combustible gas detector in accordance with 8.3.2.2.

(b) The purging shall be stopped when fuel gas is detected.

(5) The piping shall be purged by the gas supplier in accordance with written procedures.

8.3.2.2 Combustible Gas Detector.

8.3.2.2.1

Important Notice: This document is the copyright property of the National Fire Protection Association (NFPA), Copyright © 2025 NFPA, and may not be used for any other purpose or distributed to any other persons or parties.

Combustible gas detectors shall be listed and calibrated or tested in accordance with the manufacturer's instructions.

8.3.2.2.2
Combustible gas detectors shall be capable of indicating the presence of fuel gas.

Second Revision No. 25-NFPA 54-2025 [Global Input]

See attached Word Document for changes to chapter ~~9 from~~ 9 on the Manual of Style ~~Task Group~~ .

Supplemental Information

File Name	Description	Approved
54-2024_editorial_review_Chapter_9_SD_For_Revision.docx	Prod: See attached Word document on changes for chapter 9. The sections will most likely need some form of renumbering. Additionally sections that are not being revised are not shown.	
54_Global_SR-25_editorial_review_Chapter_9_SD_For_Revision.docx	For prod use	
54_Global_SR-25_editorial_review_Chapter_9_SD_For_Revision_for_ballot.docx	For ballot	

Submitter Information Verification

Committee: NFG-AAA
Submittal Date: Fri Oct 10 10:54:05 EDT 2025

Committee Statement

Committee Statement: The changes are to align chapter 9 to the NFPA Manual of Style.
Response Message: SR-25-NFPA 54-2025

Public Comment No. 41-NFPA 54-2025 [Global Input]

Important Notice: This document is the copyright property of the National Fire Protection Association (NFPA), Copyright © 2025 NFPA, and may not be used for any other purpose or distributed to any other persons or parties.

9.1.1.3

An unlisted appliance, equipment, or accessory shall be designed and recommended for the proposed service by the manufacturer.

9.1.2 Added or Converted Appliances.

When additional or replacement appliances or equipment are installed or an appliance is converted to gas from another fuel, the location in which the appliances or equipment are to be operated shall comply with the following:

(1) Air for combustion and ventilation is provided in accordance with Section 9.3..

(2) The installation components and appliances meet the combustible material clearance requirements of 9.2.2.

(3) The venting system is constructed and sized in accordance with Chapter 12.

9.1.3 Type of Gas(es).

9.1.3.1
An appliance shall be connected to the fuel gas for which it was designed.

9.1.3.2
No attempt shall be made to convert an appliance from the gas specified on the rating plate for use with a different gas without consulting the installation instructions, the gas supplier, or the appliance manufacturer for complete instructions.

9.1.3.3
Listed appliances shall not be converted unless permitted by, and in accordance with, the manufacturer's installation instructions.

9.1.5 Use of Air or Oxygen Under Pressure.

9.1.5.1*
Where air or oxygen under pressure is used in connection with the gas supply, means shall be provided to prevent air or oxygen from passing back into the gas piping.

A.9.1.5.1
Means to prevent air or oxygen from entering the gas piping could be back pressure regulators or relief valves.

9.1.5.2
Where oxygen is used, installation shall be comply with NFPA 51.

9.1.6.1*

Where corrosive or flammable process fumes or gases are present, means for their removal shall be provided.

A.9.1.6.1

Corrosive and flammable process fumes and gases include carbon monoxide, hydrogen sulfide, ammonia, chlorine, and halogenated hydrocarbons.

9.1.7 Process Air.

In addition to air needed for combustion in commercial or industrial processes, process air shall be provided as required for cooling of appliances, equipment, or material; for controlling dew point, heating, drying, oxidation, dilution, safety exhaust, odor control, and air for compressors; and for comfort and working conditions for personnel.

9.1.8.1

Important Notice: This document is the copyright property of the National Fire Protection Association (NFPA), Copyright © 2025 NFPA, and may not be used for any other purpose or distributed to any other persons or parties.

Appliances and equipment shall be furnished either with load distributing bases or with supports to prevent damage to either the building structure or the appliance and the equipment.

9.1.8.2*
At the locations selected for installation of appliances and equipment, the dynamic and static load-carrying capacities of the building structure shall be checked to determine whether they can carry the additional loads.

9.1.8.3
The appliances and equipment shall be supported and connected to the piping so as not to exert stress on the connections.

9.1.9 Flammable Vapors.

9.1.9.1
Appliances shall not be installed in areas where the open use, handling, or dispensing of flammable liquids occurs unless the design, operation, or installation reduces the ignition potential of the flammable vapors.

9.1.9.2
Appliances installed in compliance with 9.1.10 through 9.1.12 shall be considered compliant with the 9.1.9.1.

9.1.10 Installation in Residential Garages.

Appliances in residential garages and in adjacent spaces that open to the garage and are not part of the living space of a dwelling unit shall comply with the following:

(1) They shall be installed so that all burners and burner ignition devices are located not less than 18 in. (460 mm) above the floor unless listed as flammable-vapor-ignition resistant.

(2) They shall be located or protected so they are not subject to physical damage by a moving vehicle.

9.1.18 Bleed Lines for Diaphragm-Type Valves.

Bleed lines shall comply with the following requirements:

(1) Diaphragm-type valves shall be equipped to convey bleed gas to the outdoors or into the combustion chamber adjacent to a continuous pilot.

(2) In the case of bleed lines leading outdoors, means shall be employed to prevent water from entering this piping and to prevent blockage of vents by insects and foreign matter.

(3) Bleed lines shall not terminate in the appliance flue or exhaust system.

(4) In the case of bleed lines entering the combustion chamber, the following shall apply:

(a) The bleed line shall be located so the bleed gas is ignited by the pilot and the heat liberated thereby does not adversely affect the normal operation of the safety shutoff system.

(b) The terminus of the bleed line shall be installed in a fixed position relative to the pilot.

(c) For manufactured gas, the need for a flame arrester in the bleed line piping shall be determined.

(5) A bleed line(s) from a diaphragm-type valve and a vent line(s) from an appliance pressure regulator shall not be connected to a common manifold terminating in a combustion chamber.

(6) Bleed lines shall not terminate in positive-pressure-type combustion chambers.

Important Notice: This document is the copyright property of the National Fire Protection Association (NFPA), Copyright © 2025 NFPA, and may not be used for any other purpose or distributed to any other persons or parties.

9.1.20* Installation Instructions.

9.1.20.1
The installer shall conform to the appliance and equipment manufacturers' recommendations in completing an installation.

9.1.20.2
The installer shall leave the manufacturers' installation, operating, and maintenance instructions on the premises.

9.1.22* Existing Appliances.

9.1.22.1
Existing appliance installations shall be inspected to verify compliance with the provisions of Section 9.3 and Chapter 12 where a component of the building envelope is modified by one or more of the following:

(1) The building is modified under a weatherization program.

(2) A building permit is issued for a building addition or exterior building modification.

(3) Three or more window assemblies are replaced.

(4) Three or more storm windows are installed over existing windows.

(5) One or more exterior door and frame assemblies are replaced.

(6) A building air barrier is installed or replaced.

9.1.22.2
Where the inspection in 9.1.22.1 identifies noncompliance with Section 9.3 and Chapter 12, the installation shall be altered as necessary to comply with Section 9.3 and Chapter 12.

9.2.1.1

All appliances shall be located with respect to building construction and other equipment to permit access to the appliance.

9.2.2* Clearance to Combustible Materials.

Appliances and their vent connectors shall be installed with clearances from combustible material, so their operation does not create a hazard to persons or property.

A.9.2.2
Minimum clearances between combustible walls and the back and sides of various conventional types of appliances and their vent connectors are specified in Chapters 10 and 12. *(See NFPA 211.)*

9.3.1.1

Air for combustion, ventilation, and dilution of flue gases for appliances installed in buildings shall be obtained by application of one of the methods covered in 9.3.2 through 9.3.6.

9.3.1.2
Where the requirements of 9.3.2 are not met, outdoor air shall be introduced in accordance with methods covered in 9.3.3 through 9.3.6, except as provided in 9.3.1.3.

9.3.1.3
The provision in 9.3.1.2 shall not apply to direct-vent appliances.

9.3.1. 4

Appliances of other than natural draft design, appliances not designated as Category I vented appliances, and appliances equipped with power burners shall be provided with combustion, ventilation, and dilution air in accordance with the appliance manufacturer's instructions.

9.3.1. 5

Important Notice: This document is the copyright property of the National Fire Protection Association (NFPA), Copyright © 2025 NFPA, and may not be used for any other purpose or distributed to any other persons or parties.

Appliances shall be located so as not to interfere with circulation of combustion, ventilation, and dilution air.

9.3.1. 6

Where used, a draft hood or a barometric draft regulator shall be installed in the same room or enclosure as the appliance served to prevent any difference in pressure between the hood or regulator and the combustion air supply.

9.3.1. 7

Where exhaust fans, clothes dryers, and kitchen ventilation systems interfere with the operation of appliances, make-up air shall be provided.

9.3.2 Indoor Combustion Air.

9.3.2.1 Required Indoor Air Volume.
The required volume of indoor air shall be determined in accordance with the method in 9.3.2.2 or 9.3.2.3, except as provided in 9.3.2.1.1.

9.3.2.1.1
Where the air infiltration rate is known to be less than 0.40 air change per hour (ACH), the method in 9.3.2.3 shall be used.

9.3.2.1.2
The total required volume shall be the sum of the required volume calculated for all appliances located within the space.

9.3.2.1.3
Rooms communicating directly with the space in which the appliances are installed through openings not furnished with doors, and through combustion air openings sized and located in accordance with 9.3.2.4, shall be considered a part of the required volume.

9.3.2.2* Standard Method.

The minimum required volume shall be 50 ft^3/1000 Btu/hr (4.8 m^3/kW).

9.3.2. 4 Indoor Opening Size and Location.

Openings used to connect indoor spaces shall be sized and located in accordance with the following:

(1) *Where combining spaces on the same story the following shall apply:
a) Each opening shall have a minimum free area of 1 $in.^2$/1000 Btu/hr (2200 mm^2/kW) of the total input rating of all appliances in the space but not less than 100 $in.^2$ (0.06 m^2).
b) One permanent opening shall commence within 12 in. (300 mm) of the top of the enclosure.
c) One permanent opening shall commence within 12 in. (300 mm) of the bottom of the enclosure.
d) The minimum dimension of air openings shall not be less than 3 in. (80 mm).

(2) Where combining spaces in different stories, the volumes of spaces in different stories shall be considered communicating spaces where such spaces are connected by one or more permanent openings in doors or floors having a total minimum free area of 2 $in.^2$/1000 Btu/hr (4400 mm^2/kW) of total input rating of all appliances.

9.3.3 Outdoor Combustion Air.

Outdoor combustion air shall be provided through opening(s) to the outdoors, with a minimum dimension not less than 3 in. (80 mm), in accordance with the methods in 9.3.3.1 or 9.3.3.2.

9.3.3.1 Two Permanent Openings Method.

9.3.3.1.1
Two permanent openings, one commencing within 12 in. (300 mm) of the top of the enclosure and one commencing within 12 in. (300 mm) of the bottom of the enclosure, shall be provided.

Important Notice: This document is the copyright property of the National Fire Protection Association (NFPA), Copyright © 2025 NFPA, and may not be used for any other purpose or distributed to any other persons or parties.

9.3.3.1.2
The openings shall communicate directly, or by ducts, with the outdoors or spaces that freely communicate with the outdoors, as follows:

(1) *Where directly communicating with the outdoors or where communicating to the outdoors through vertical ducts, each opening shall have a minimum free area of 1 in.^{2}/4000 Btu/hr (550 mm^2/kW) of total input rating of all appliances in the enclosure.

(2) *Where communicating with the outdoors through horizontal ducts, each opening shall have a minimum free area of 1 in.^{2}/2000 Btu/hr (1100 mm^2/kW) of total input rating of all appliances in the enclosure.

9.3.3.2* One Permanent Opening Method.

9.3.3.2.1
One permanent opening, commencing within 12 in. (300 mm) of the top of the enclosure, shall be provided.

9.3.3.2.2
The appliance shall have clearances of at least 1 in. (25 mm) from the sides and back and 6 in. (150 mm) from the front of the appliance.

9.3.3.2.3
The opening shall either directly communicate with the outdoors or communicate through a vertical or horizontal duct to the outdoors or spaces that freely communicate with the outdoors.

9.3.3.2.4
The minimum free area of the opening in 9.3.3.2.3 shall comply with the following:

(1) Be 1 in.^{2}/3000 Btu/hr (700 mm^2/kW) of the total input rating of all appliances located in the enclosure

(2) Be not less than the sum of the areas of all vent connectors in the space

9.3.4 Combination Indoor and Outdoor Combustion Air.

Use of combination of indoor and outdoor combustion air shall comply with the following:

(1) Indoor openings connecting the interior spaces shall comply with 9.3.2.4.

(2) Outdoor openings shall be located in accordance with 9.3.3.

(a) The ratio of the interior spaces shall be the available volume of all communicating spaces divided by the required volume.

(b) The outdoor size reduction factor shall be 1 minus the ratio of interior spaces.

(c) The minimum size of outdoor opening(s) shall be the full size of outdoor opening(s) calculated in accordance with 9.3.3, multiplied by the reduction factor.

(d) The minimum dimension of air openings shall not be less than 3 in. (80 mm).

9.3.5 Engineered Installations.

Engineered combustion air installations shall provide the required supply of combustion, ventilation, and dilution air determined using engineering methods.

9.3.8 Combustion Air Ducts.

Combustion air ducts shall comply with 9.3.8.1 through 9.3.8.10.

9.3.8.1

Ducts shall be constructed of galvanized steel or a material having equivalent corrosion resistance, strength, and rigidity, except as provided in 9.3.8.2.

9.3.8.2

Important Notice: This document is the copyright property of the National Fire Protection Association (NFPA), Copyright © 2025 NFPA, and may not be used for any other purpose or distributed to any other persons or parties.

Within dwellings units, unobstructed stud and joist spaces shall not be prohibited from conveying combustion air if only one fireblock is removed.

9.3.8. 3

Ducts shall terminate in an unobstructed space, allowing free movement of combustion air to the appliances.

9.3.8. 4

Ducts shall serve a single space.

9.3.8. 5

Ducts shall not serve both upper and lower combustion air openings where both such openings are used.

9.3.8.6
The separation between ducts serving upper and lower combustion air openings shall be maintained to the source of combustion air.

9.3.8. 7

Ducts shall not be screened where terminating in an attic space.

9.3.8. 8

Horizontal upper combustion air ducts shall not slope downward toward the source of combustion air.

9.3.8. 9*

The remaining space surrounding a chimney liner, gas vent, special gas vent, or plastic piping installed within a masonry, metal, or factory-built chimney shall not be used to supply combustion air.

A.9.3.8.9
Direct-vent appliances designed for installation in a solid-fuel-burning fireplace, where installed in accordance with the manufacturer's installation instructions, are permitted.

9.3.8.10

Combustion air intake openings located on the exterior of the building shall have the lowest side of the combustion air intake openings located at least 12 in. (300 mm) vertically from the adjoining finished ground level.

9.4.2.2
Appliances shall be installed on a well-drained surface of the roof.

9.4.2.3
At least 6 ft (1.8 m) of clearance shall be available between any part of the appliance and the edge of a roof or similar hazard, or rigidly fixed rails, guards, parapets, or other building structures at least 42 in. (1.1 m) in height are to be provided on the exposed side.

9.4.2.4

Appliances requiring an external source of electrical power shall be installed in accordance with *NFPA 70*.

9.4.2.5

A suitable platform, walkway, or both shall be provided above the water line where water stands on the roof at the appliance or in the passageways to the appliance, or where the roof design includes a water seal

9.4.2.5.1
The platform(s) or walkway(s) required in 9.4.2.5 shall be located adjacent to the appliance and control panels so that the appliance can be serviced where water stands on the roof.

9.4.3.3

The inside means of access shall be a permanent or foldaway inside stairway or ladder, terminating in an enclosure, scuttle, or trapdoor.

Important Notice: This document is the copyright property of the National Fire Protection Association (NFPA), Copyright © 2025 NFPA, and may not be used for any other purpose or distributed to any other persons or parties.

9.4.3.3.1
Scuttles and trapdoors shall be at least 22 in. × 24 in. (560 mm × 610 mm) in size.

9.4.3.3.2
Scuttles and trapdoors shall open under all conditions, including snow.

9.4.3.3.3
Scuttles and trapdoors shall be constructed to permit access from the roof side unless deliberately locked on the inside.

9.4.3.4
At least 6 ft (1.8 m) of clearance shall be available between the access opening and the edge of the roof or similar hazard, or rigidly fixed rails or guards a minimum of 42 in. (1.1 m) in height are to be provided on the exposed side.

9.4.3.5
Where parapets or other building structures are utilized in lieu of guards or rails, they shall be a minimum of 42 in. (1.1 m) in height.

9.4.3.6

Permanent lighting shall be provided at the roof access.

9.4.3.6.1
The switch for such lighting shall be located inside the building near the access means leading to the roof.

9.5.1.2

The passageway shall be unobstructed.

9.5.1.3
The passageway shall have solid flooring not less than 24 in. (610 mm) wide from the entrance opening to the appliance.

9.5.3 Lighting and Convenience Outlet.

9.5.3.1
A permanent 120 V receptacle outlet and a luminaire shall be installed near the appliance.

9.5.3.2
The switch controlling the luminaire shall be located at the entrance to the passageway.

9.6.1.1 Protection of Connectors.

9.6.1.1.1
Connectors and tubing addressed in 9.6.1(2), 9.6.1(3), 9.6.1(4), 9.6.1(5), and 9.6.1(6) shall be installed to be protected against physical and thermal damage.

9.6.1.1.2
Aluminum alloy tubing and connectors shall be coated to protect against external corrosion where they are in contact with masonry, plaster, or insulation or are subject to repeated wettings by detergents, sewage, or water other than rainwater.

9.6.1.2 Protection at Appliance Openings.

Materials addressed in 9.6.1(2), 9.6.1(3), 9.6.1(4), 9.6.1(5), and 9.6.1(6) shall not be installed through an opening in an appliance housing, cabinet, or casing unless the tubing or connector is protected against damage.

9.6.1.3 Food Service Appliance Connectors.

(1) They shall be installed in accordance with the connector manufacturer's installation instructions.

Important Notice: This document is the copyright property of the National Fire Protection Association (NFPA), Copyright © 2025 NFPA, and may not be used for any other purpose or distributed to any other persons or parties.

(2) They shall be listed in accordance with ANSI Z21.69/CSA 6.16, *Connectors for Moveable Gas Appliances*.

.

9.6.1.5* Suspended Low-Intensity Infrared Tube Heaters.

Suspended low-intensity infrared tube heaters shall be connected to the building piping system with a connector listed for the application in accordance with ANSI Z21.24/CSA 6.10, *Connectors for Gas Appliances*.

9.6.1.5.1

The connector shall be installed in accordance with the tube heater installation instructions.

9.6.1.5.2
The connector shall be in the same room as the appliance.

9.6.1.5.3

Only one connector shall be used per appliance.

9.6.2 Use of Nonmetallic Gas Hose Connectors.

Listed gas hose connectors shall be used in accordance with the manufacturer's installation instructions and as follows:

(1Indoor gas hose connectors shall be used only to connect laboratory, shop, and ironing appliances requiring mobility during operation and installed in accordance with the following:

(a) An appliance shutoff valve shall be installed where the connector is attached to the building piping.

(b) The connector shall be minimum length.

(c) The connector shall not exceed 6 ft (1.8 m).

(d) The connector shall neither be concealed nor extend from one room to another or pass through wall partitions, ceilings, or floors.

(2) Outdoor gas hose connectors used to connect portable outdoor appliances shall be listed in accordance with CSA/ANSI Z21.54/CSA 8.4, *Gas Hose Connectors for Portable Outdoor Gas-Fired Appliances*, and installed in accordance with the following:

(a) An appliance shutoff valve, a listed quick-disconnect device, or a listed gas convenience outlet shall be installed where the connector is attached to the supply piping and such that it prevents the accumulation of water or foreign matter.

(b) The appliance shutoff valve, listed quick-disconnect device, or listed gas convenience outlet connection shall be made only in the outdoor area where the appliance is to be used.

9.6.3* Laboratory Burners.

Injection (Bunsen) burners used in laboratories and educational facilities shall be permitted to be connected to the gas supply by an unlisted hose.

9.6.4.1

Where portable industrial appliances or appliances requiring mobility or subject to vibration are connected to the building gas piping system by a flexible hose, the hose shall be recommended by the hose manufacturer for the application.

9.6.4.2

Where industrial appliances requiring mobility are connected to the rigid piping by swivel joints or couplings, the following shall apply:

Important Notice: This document is the copyright property of the National Fire Protection Association (NFPA), Copyright © 2025 NFPA, and may not be used for any other purpose or distributed to any other persons or parties.

(1) The swivel joints or couplings shall be suitable for the service required.

(2) Only the minimum number of swivel joints or couplings required shall be installed.

9.6.4.3

Where industrial appliances subject to vibration are connected to the building piping system by all-metal flexible connectors, the connectors shall be recommended by the metal flexible connector manufacturer for the service required.

9.6.4.4

Where flexible connections are used, they shall be of the minimum practical length.

9.6.4.5
Flexible connections shall not extend from one room to another or pass through any walls, partitions, ceilings, or floors.

9.6.4.6
Flexible connections shall not be used in any concealed location.

9.6.4.7
Flexible connections shall be protected against physical or thermal damage.

9.6.4.8
Flexible connections shall be provided with gas shutoff valves in readily accessible locations in rigid piping upstream from the flexible connections.

9.6.5 Appliance Shutoff Valves and Connections.

9.6.5.1
Each appliance connected to a piping system shall have an accessible, approved manual shutoff valve with a nondisplaceable valve member, or a listed gas convenience outlet.

9.6.5.2
Appliance shutoff valves and convenience outlets shall serve a single appliance only.

9.6.5.3
Appliance shutoff valves and convenience outlets shall be installed in accordance with 9.6.5.4.

9.6.5. 4

The shutoff valve shall be located within 6 ft (1.8 m) of the appliance it serves except as permitted in 9.6.5.5 through 9.6.5.7.

9.6.5.4.1

Where a connector is used, the valve shall be installed upstream of the connector.

9.6.5.4.2
A union or flanged connection shall be provided downstream from the valve to permit removal of appliance controls.

9.6.5.4.3

Shutoff valves serving decorative appliances in a fireplace shall not be located within the fireplace firebox except where the valve is listed for such use.

9.6.5. 5

Shutoff valves serving appliances installed in vented fireplaces and ventless firebox enclosures shall not be required to be located within 6 ft (1.8 m) of the appliance where such valves are readily accessible and permanently identified.

9.6.5.5.1

Important Notice: This document is the copyright property of the National Fire Protection Association (NFPA), Copyright © 2025 NFPA, and may not be used for any other purpose or distributed to any other persons or parties.

The piping from the shutoff valve to within 6 ft (1.8 m) of the appliance shall be designed, sized, installed, and tested in accordance with Chapters 5, 6, 7, and 8.

9.6.5.6

Where installed at a manifold, the appliance shutoff valve shall be located within 50 ft (15 m) of the appliance served.

9.6.5.6.1
Where installed at a manifold, the appliance shutoff valve shall be readily accessible and permanently identified.

9.6.5.6.2
The piping from the manifold to within 6 ft (1.8 m) of the appliance shall be designed, sized, installed, and tested in accordance with Chapters 5, 6, 7, and 8.

9.6.8.2
The sediment trap shall be either a tee fitting with a capped nipple in the bottom outlet, as illustrated in Figure 9.6.8.2, or another device recognized as a sediment trap.

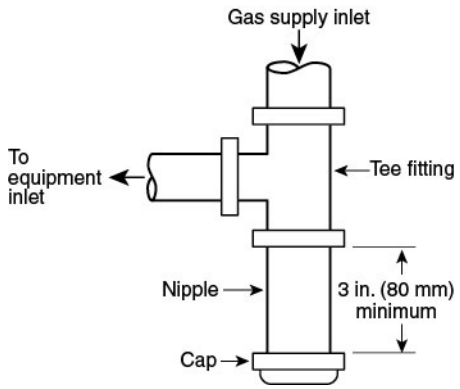

9.8.2 Drafts.

Any hole in the plaster or panel through which the wires pass from the thermostat to the appliance being controlled shall be sealed to prevent drafts from affecting the thermostat.

Second Revision No. 26-NFPA 54-2025 [Global Input]

See attached Word Document for changes to chapter ~~10 from~~ 10 on the NFPA Manual of ~~Style Task Group~~ Style

Supplemental Information

File Name	Description	Approved
54-2024_editorial_review_Chapter_10_SD_For_Revision.docx	Prod: See attached Word document on changes for chapter 10. The sections will most likely need some form of renumbering. Additionally sections that are not being revised are not shown.	
54_Global_SR-26_editorial_review_Chapter_10_SD_For_Revision.docx	For prod use	
54_Global_SR-26_editorial_review_Chapter_10_SD_For_Revision_for_ballot.docx	For ballot	

Submitter Information Verification

Committee: NFG-AAA
Submittal Date: Fri Oct 10 10:56:40 EDT 2025

Committee Statement

Committee Statement: The changes are to align chapter 10 to the NFPA Manual of Style.
Response Message: SR-26-NFPA 54-2025

Public Comment No. 42-NFPA 54-2025 [Global Input]

Important Notice: This document is the copyright property of the National Fire Protection Association (NFPA), Copyright © 2025 NFPA, and may not be used for any other purpose or distributed to any other persons or parties.

Chapter 10 Installation of Specific Appliances

10.1.1* Application.

10.1.1.1
Appliances shall be installed in accordance with the manufacturers' installation instructions and, as elsewhere specified in this chapter, as applicable to the appliance.

10.1.1.2
Unlisted appliances shall be installed as specified in this chapter as applicable to the appliances.

10.1.3 Locations with Airhandlers.

Where a draft-hood–equipped appliance is installed in a space containing a furnace or other air handler, the ducts serving the furnace or air handler shall comply with 10.3.8.5.

10.2.3 Connection of Gas-Engine-Powered Air Conditioners.

Gas engines shall not be rigidly connected to the gas supply piping.

10.2.4 Clearances for Indoor Installation.

The installation of air-conditioning appliances shall comply with the following requirements:

(1) Air-conditioning appliances shall be installed with clearances in accordance with the manufacturer's instructions.

(2) Air-conditioning appliances shall be permitted to be installed with reduced clearances to combustible material, provided that the combustible material or appliance is protected as described in Table 10.2.4 and such reduction is allowed by the manufacturer's installation instructions.

(3) Where the furnace plenum is adjacent to plaster on metal lath or noncombustible material attached to combustible material, the clearance shall be measured to the surface of the plaster or other noncombustible finish where the clearance specified is 2 in. (50 mm) or less.

(4)* Air-conditioning appliances shall have the clearance from supply ducts within 3 ft (0.9 m) of the furnace plenum be not less than that specified from the furnace plenum

A.10.2.4(4)

Clearance beyond 3 ft (0.9 m) is not necessary,

Table 10.2.4 Reduction of Clearances with Specified Forms of Protection

Type of protection applied to and covering all surfaces of combustible material within the distance specified as the required clearance with no protection	Where the required clearance with no protection from appliance, vent connector, or single-wall metal pipe is:									
	36 in.		18 in.		12 in.		9 in.		6 in.	
	Allowable Clearances with Specified Protection (in.)									
	Use Col. 1 for clearances above appliance or horizontal connector. Use Col. 2 for clearances from appliance, vertical connector, and single-wall metal pipe.									
	Above (Col. 1)	Sides and Rear (Col. 2)	Above (Col. 1)	Sides and Rear (Col. 2)	Above (Col. 1)	Sides and Rear (Col. 2)	Above (Col. 1)	Sides and Rear (Col. 2)	Above (Col. 1)	Sides and Rear (Col. 2)
(1) 3½ in. thick masonry wall without ventilated air space	—	24	—	12	—	9	—	6	—	5

Important Notice: This document is the copyright property of the National Fire Protection Association (NFPA), Copyright © 2025 NFPA, and may not be used for any other purpose or distributed to any other persons or parties.

Type of protection applied to and covering all surfaces of combustible material within the distance specified as the required clearance with no protection	Where the required clearance with no protection from appliance, vent connector, or single-wall metal pipe is:									
	36 in.		18 in.		12 in.		9 in.		6 in.	
	Allowable Clearances with Specified Protection (in.)									
	Use Col. 1 for clearances above appliance or horizontal connector. Use Col. 2 for clearances from appliance, vertical connector, and single-wall metal pipe.									
	Above (Col. 1)	Sides and Rear (Col. 2)	Above (Col. 1)	Sides and Rear (Col. 2)	Above (Col. 1)	Sides and Rear (Col. 2)	Above (Col. 1)	Sides and Rear (Col. 2)	Above (Col. 1)	Sides and Rear (Col. 2)
(2) 1/2 in. insulation board over 1 in. glass fiber or mineral wool batts	24	18	12	9	9	6	6	5	4	3
(3) 0.024 in. (nominal 24 gauge) sheet metal over 1 in. glass fiber or mineral wool batts reinforced with wire on rear face with ventilated air space	18	12	9	6	6	4	5	3	3	3
(4) 3 1/2 in. thick masonry wall with ventilated air space	—	12	—	6	—	6	—	6	—	6
(5) 0.024 in. (nominal 24 gauge) sheet metal with ventilated air space	18	12	9	6	6	4	5	3	3	2
(6) 1/2 in. thick insulation board with ventilated air space	18	12	9	6	6	4	5	3	3	3
(7) 0.024 in. (nominal 24 gauge) sheet metal with ventilated air space over 0.024 in. (nominal 24 gauge) sheet metal with ventilated air space	18	12	9	6	6	4	5	3	3	3
(8) 1 in. glass fiber or mineral wool batts sandwiched between two sheets 0.024 in. (nominal 24 gauge) sheet metal with ventilated air space	18	12	9	6	6	4	5	3	3	3

For SI units, 1 in. = 25.4 mm.

Note: See 10.2.4.1 through 10.2.4.13. All clearances and thicknesses are minimums; larger clearances and thicknesses are acceptable.

10.2.4.1
Reduction of clearances from combustible materials shall not interfere with combustion air, draft hood clearance and relief, and accessibility of servicing.

10.2.4.2
All clearances shall be measured from the outer surface of the combustible material to the nearest point on the surface of the appliance, disregarding any intervening protection applied to the combustible material.

10.2.4.3
Spacers and ties shall be of noncombustible material *(see 10.2.4.3.1)*.

10.2.4.3.1
No spacer or tie shall be used directly opposite the appliance or connector.

Important Notice: This document is the copyright property of the National Fire Protection Association (NFPA), Copyright © 2025 NFPA, and may not be used for any other purpose or distributed to any other persons or parties.

10.2.4.4
Where all clearance reduction systems use a ventilated air space air circulation shall be provided as described in Table 10.2.4.

10.2.4.5
At least 1 in. (25 mm) space shall exist between clearance reduction systems and combustible walls and ceilings for reduction systems using a ventilated air space.

10.2.4.6
Where a wall protector is installed on a single flat wall away from corners, it shall have a minimum 1 in. (25 mm) air gap.

(1) The wall protector shall have a minimum 1 in. (25 mm) air gap.

(2) The bottom and top edges, or only the side and top edges, or all edges of the wall protector shall be left open.

10.2.4.7
Mineral wool batts (blanket or board) shall have a minimum density of 8 lb/ft^3 (128 kg/m^3) and a minimum melting point of 1500°F (816°C).

10.2.4.8
Insulation material used as part of a clearance reduction system shall have a thermal conductivity of 1.0 Btu in./ft^2/hr-°F (0.144 W/m-K) or less.

10.2.4.9
At least 1 in. (25 mm) space shall exist between the appliance and the protector.

10.2.4.10
The clearance between the appliance and the combustible surface shall not be reduced below that allowed in Table 10.2.4.

10.2.4.11
Listed single-wall connectors shall be installed in accordance with the manufacturers' installation instructions.

10.2.6 Furnace Plenums and Air Ducts.

Where an air conditioner is installed within an enclosure, the installation shall comply with 10.3.8.5.

10.3.2 Location.

Central heating furnace and low-pressure boiler installations in bedrooms or bathrooms shall comply with one of the following:

(1) Central heating furnaces and low-pressure boilers shall be installed in a closet in accordance with the following:
a) The closet is equipped with a weather-stripped door with no openings and with a self-closing device.
b) All combustion air is obtained from the outdoors in accordance with 9.3.3.

(2) Central heating furnaces and low-pressure boilers shall be the direct-vent type.

10.3.3.4

Front clearance shall allow for servicing the burner and the furnace or boiler.

10.3.3.6

The clearances to central heating furnaces and low-pressure boilers shall not interfere with combustion air, draft hood clearance and relief, and accessibility for servicing.

10.3.3.7*

Important Notice: This document is the copyright property of the National Fire Protection Association (NFPA), Copyright © 2025 NFPA, and may not be used for any other purpose or distributed to any other persons or parties.

Supply air ducts connecting to listed central heating furnaces shall have the same minimum clearance to combustibles as required for the furnace supply plenum for a minimum distance of 3 ft (0.9 m) from the supply plenum.

A.10.3.3.7
Clearance beyond 3 ft (0.9 m) is not required.

10.3.3.8*

Supply air ducts connecting to unlisted central heating furnaces equipped with temperature limit controls with a maximum setting of 250°F (121°C) shall have a minimum clearance to combustibles of 6 in. (150 mm) for a minimum distance of 6 ft (1.8 m) from the furnace supply plenum.

A.10.3.3.8
Clearance beyond 6 ft (1.8 m) is not required.

10.3.4 Installation.

10.3.4.1
A central heating boiler or furnace shall be installed in accordance with the manufacturer's instructions in one of the following manners, except as permitted in 10.3.4.2 and 10.3.4.3 :

(1) On a floor of noncombustible construction with noncombustible flooring and surface finish and with no combustible material against the underside thereof

(2) On fire-resistive slabs or arches having no combustible material against the underside thereof

10.3.4.2
Appliances listed for installation on a combustible floor shall not be required to comply with 10.3.4.1.

10.3.4.3
A central heating boiler or furnace installation on a floor protected in an approved manner shall not be required to comply with 10.3.4.1.

10.3.5 Temperature- or Pressure-Limiting Devices.

10.3.5.1
Steam and hot water boilers, respectively, shall be provided with approved automatic limiting devices for shutting down the burner(s) to prevent boiler steam pressure or boiler water temperature from exceeding the maximum allowable working pressure or temperature.

10.3.5.2
Safety limit controls shall not be used as operating controls.

10.3.6 Low-Water Cutoff.

10.3.6.1
All water boilers and steam boilers shall be provided with an automatic means to shut off the fuel supply to the burner(s) if the boiler water level drops below the lowest safe water line.

10.3.6.2
In lieu of a low-water cutoff, water tube or coil-type boilers that require forced circulation to prevent overheating and failure shall have an approved flow-sensing device arranged to shut down the boiler when the flow rate is less than required to protect the boiler against overheating.

10.3.7* Steam Safety and Pressure-Relief Valves.

10.3.7.1
Steam and hot water boilers shall be equipped, respectively, with listed or approved steam safety or pressure-relief valves of the required discharge capacity in accordance with the manufacturer's instructions and ASME requirements.

10.3.7.2
A shutoff valve shall not be placed between the relief valve and the boiler or on discharge pipes between such valves and the atmosphere.

Important Notice: This document is the copyright property of the National Fire Protection Association (NFPA), Copyright © 2025 NFPA, and may not be used for any other purpose or distributed to any other persons or parties.

10.3.7. 3

Relief valves shall be piped to discharge near the floor.

10.3.7. 4

All discharge piping shall be at least the same size as the relief valve discharge piping.

10.3.7. 5

Discharge piping shall not contain threaded end connection at its termination point.

10.3.8.3*
Where a furnace plenum is not supplied with the furnace, any fabrication and installation instructions provided by the manufacturer shall be followed.

10.3.8.4
The method of connecting supply and return ducts shall facilitate the required circulation of air.

10.3.8. 5

Where a furnace is installed so supply ducts carry air circulated by the furnace to areas outside the space containing the furnace, the return air shall also be handled by a duct(s) sealed to the furnace casing and terminating outside the space containing the furnace.

10.3.8.6
Return air shall not be taken from the mechanical room containing the furnace.

10.3.9 Refrigeration Coils.

The installation of refrigeration coils shall comply with the following requirements:

(1) A refrigeration coil shall not be installed in conjunction with a forced-air furnace where circulation of cooled air is provided by the furnace blower, unless the blower has the required capacity to overcome the external static pressure resistance imposed by the duct system and refrigeration coil at the air flow rate for heating or cooling, whichever is greater.

(2) Furnaces shall not be located upstream from refrigeration coils, unless the refrigeration coil is designed or equipped so as not to develop excessive temperature or pressure.

(3) Refrigeration coils shall be installed in parallel with, or on the downstream side of, central furnaces to avoid condensation in the heating element, unless the furnace has been specifically listed for downstream installation.

(4) With a parallel flow arrangement, the dampers or other means used to control flow of air shall prevent any circulation of cooled air through the furnace.

(5) Means shall be provided for the disposal of condensate and to prevent dripping of condensate on the heating element.

10.3.10.1

Boilers, where used in conjunction with refrigeration systems, shall be installed so that the chilled medium is piped in parallel with the heating boiler with valves to prevent the chilled medium from entering the heating boiler.

10.4.2 Clearance.

10.4.2.1
The installation of Type I clothes dryers shall comply with the following requirements:

(1) Clothes dryers shall be installed with a minimum clearance of 6 in. (150 mm) from adjacent combustible material.

(2) Clothes dryers listed for installation at reduced clearances shall be installed in accordance with the manufacturer's installation instructions.

(3) Clothes dryers installed in closets shall be specifically listed for such installation.

Important Notice: This document is the copyright property of the National Fire Protection Association (NFPA), Copyright © 2025 NFPA, and may not be used for any other purpose or distributed to any other persons or parties.

10.4.2.2

The installation of Type 2 clothes dryers shall comply with the following requirements:

(1) Clothes dryers shall be installed with clearances of not less than those shown on the marking plate and in the manufacturer's instructions.

(2) Clothes dryers designed and marked "For use only in noncombustible locations" shall not be installed elsewhere.

10.4.5.1

A clothes dryer exhaust duct for Type 1 clothes dryers shall not be connected into any vent connector, gas vent, chimney, crawl space, attic, or other similar concealed space.

10.4.5.2

Ducts for exhausting Type 1 clothes dryers shall not be assembled with screws or other fastening means that extend into the duct and that would catch lint and reduce the efficiency of the exhaust system.

10.4.5.3

Exhaust ducts for Type 1 clothes dryers shall be constructed of rigid metallic material.

10.4.5.4

Transition ducts used to connect the Type 1 clothes dryer to the exhaust duct shall be listed and labeled in accordance with UL 2158A, *Clothes Dryer Transition Ducts*, and installed in accordance with the clothes dryer manufacturer's installation instructions.

10.4.6.2

Exhaust ducts for Type 2 clothes dryers shall be constructed of sheet metal or other noncombustible material.

10.4.6.3

Exhaust ducts for Type 2 clothes dryers shall be equivalent in strength and corrosion resistance to ducts made of galvanized sheet steel not less than 0.0195 in. (0.5 mm) thick.

10.4.6. 4

Type 2 clothes dryers shall be equipped or installed with lint-controlling means.

10.4.6. 5

Where ducts pass through walls, floors, or partitions, the space around the duct shall be sealed with noncombustible material.

10.4.6. 6

Multiple installations of Type 2 clothes dryers shall be installed to prevent adverse operation due to back pressures that might be created in the exhaust systems.

10.6.3 Installation.

10.6.3.1

A decorative appliance for installation in a vented fireplace shall be installed only in a vented fireplace having a working chimney flue and constructed of noncombustible materials.

10.6.3.2

A decorative appliance for installation in a vented fireplace shall not be thermostatically controlled.

10.6.3. 3

A decorative appliance for installation in a vented fireplace shall be installed in accordance with the manufacturer's installation instructions.

10.6.3. 4

Important Notice: This document is the copyright property of the National Fire Protection Association (NFPA), Copyright © 2025 NFPA, and may not be used for any other purpose or distributed to any other persons or parties.

A decorative appliance for installation in a vented fireplace installed in a manufactured home shall be listed for installation in manufactured homes.

10.7.2* Prohibited Installations.

Vented gas fireplaces, other than direct-vent-type, shall not be installed in bathrooms or bedrooms unless the bedroom or bathroom has the required volume in accordance with 9.3.2.

10.7.3 Installation.

The installation of vented gas fireplaces shall comply with the following requirements:

(1) Vented gas fireplaces shall be installed in accordance with the manufacturer's installation instructions.
(2) Where installed in or attached to combustible material, vented gas fireplaces shall be listed for such installation.

(3) Panels, grilles, and access doors that are required to be removed for normal servicing operations shall not be attached to buildings.

(4) Direct-vent gas fireplaces shall be installed with vents air intake terminals outdoors and in accordance with the manufacturer’s instructions.

10.8.1 Application.

Direct gas-fired heating and forced ventilation appliances for commercial and industrial applications shall be listed in accordance with the following standards as applicable:

(1) ANSI Z83.4/CSA 3.7, *Non-Recirculating Direct Gas-Fired Heating and Forced Ventilation Appliances for Commercial and Industrial Application*

(2) ANSI Z83.18, *Recirculating Direct Gas-Fired Heating and Forced Ventilation Appliances for Commercial and Industrial Application*

10.8.2.2

Nonrecirculating direct gas-fired heating and forced ventilation appliances shall not recirculate room air.

10.8.5 Air Supply.

The air supply to direct gas-fired heating and forced ventilation appliances shall be in accordance with 10.8.5.1 through 10.8.5.4.

10.8.5.2

Ventilation air to the recirculating direct gas-fired heating and forced ventilation appliance shall be ducted directly from outdoors.

10.8.5.3
Air in excess of the minimum ventilation air specified on the heater's rating plate shall be taken from the building, ducted directly from outdoors, or a combination of both.

10.8.5. 4

Where outdoor air dampers or closing louvers are used, they shall be verified to be in the open position prior to main burner operation.

10.8.6 Atmospheric Vents or Gas Reliefs or Bleeds.

10.8.6.1
Direct gas-fired heating and forced ventilation appliances with valve train components equipped with atmospheric vents, gas reliefs, or bleeds shall comply with the following:

(1) They shall have their vent lines, gas reliefs, or bleeds lead to a safe point outdoors.

Important Notice: This document is the copyright property of the National Fire Protection Association (NFPA), Copyright © 2025 NFPA, and may not be used for any other purpose or distributed to any other persons or parties.

(2) They shall be designed to prevent water from entering.

(3) They shall be designed to prevent blockage from insects and foreign matter.

10.8.6.2
An atmospheric vent line shall not be required to be provided on a valve train component equipped with a listed vent limiter.

10.8.7 Relief Openings.

The design of the installation shall include provisions to permit the direct gas-fired heating and forced ventilation appliances to operate at their rated airflow without overpressurizing the space served by the heater by considering the structure's designed infiltration rate, designed relief openings, or an interlocked powered exhaust system, or a combination of these methods.

10.8.7.2

Louver or counterbalanced gravity damper relief openings shall be permitted.

10.8.7.3
Where motorized dampers or closable louvers are used, they shall be proved to be in their open position prior to main burner operation.

10.9.2 Clearances.

10.9.2.1
Duct furnaces shall be installed with clearances of at least 6 in. (150 mm) between adjacent walls, ceilings, and floors of combustible material, and the furnace draft hood.

10.9.2.2
Duct furnace clearances shall comply with the following:

(1) Duct furnaces listed for installation at lesser clearances shall be installed in accordance with the manufacturer's installation instructions.

(2) The clearance shall not interfere with combustion air and accessibility.

10.9.5 Location of Draft Hood and Controls.

10.9.5.1
The controls, combustion air inlet, and draft hoods for duct furnaces shall be located outside the ducts.

10.9.5.2
The draft hood shall be located in the same enclosure from which combustion air is taken.

10.9.6 Circulating Air.

10.9.6.1
Where a duct furnace is installed so that supply ducts carry air circulated by the furnace to areas outside the space containing the furnace, the return air shall also be handled by a duct(s) sealed to the furnace casing and terminating outside the space containing the furnace.

10.9.6.2
The duct furnace shall be installed on the positive-pressure side of the circulating air blower.

10.9.7.1

A duct furnace shall not be installed in conjunction with a refrigeration coil where circulation of cooled air is provided by the blower, except as provided by 10.9.7.2.

10.9.7.2
A duct furnace shall be permitted to be installed in conjunction with a refrigeration coil where the blower has the required capacity to overcome the external static resistance imposed by the duct system, the furnace, and the cooling coil and the air throughput necessary for heating or cooling, whichever is greater.

10.9.7. 3

Important Notice: This document is the copyright property of the National Fire Protection Association (NFPA), Copyright © 2025 NFPA, and may not be used for any other purpose or distributed to any other persons or parties.

Duct furnaces used in conjunction with cooling appliances shall comply with the following:

(1) Duct furnaces shall be installed in parallel with or on the upstream side of cooling coils to avoid condensation within heating elements.

(2) With a parallel flow arrangement, dampers or other means used to control the flow of air shall prevent any circulation of cooled air through the unit.

10.9.7.4
Where a duct furnace has been listed for downstream installation, 10.9.7.3(2) and 10.9.7.3(2) shall not apply.

10.9.7.6*

Where a duct furnace is installed downstream of an evaporative cooler or air washer, the heat exchanger shall be constructed of corrosion-resistant materials.

10.9.7.7
Air washers operating with chilled water that deliver air below the dew point of the ambient air at the duct furnace shall be considered as refrigeration systems.

10.10.5 Placement.

The following shall apply to furnaces that serve one story:

(1) Floor furnaces shall not be installed in the floor of any doorway, stairway landing, aisle, or passageway of any enclosure, public or private, or in an exitway from any such room or space.

(2) The register of a floor furnace with a horizontal warm air outlet shall not be placed closer than 6 in. (150 mm) from the nearest wall.

(3) A distance of at least 18 in. (460 mm) from two adjoining sides of the floor furnace register to walls shall be provided with the remaining sides being at least 6 in. (150 mm) from a wall.

(4) Wall register models shall not be placed closer than 6 in. (150 mm) to a corner.

(5) The furnace shall be placed so that a door, drapery, or similar object cannot be nearer than 12 in. (300 mm) to any portion of the register of the furnace.

10.10.8 Clearance.

10.10.8.1
The lowest portion of the floor furnace shall have at least a 6 in. (150 mm) clearance from the ground level.

10.10.8.2
A reduced clearance to a minimum of 2 in. (50 mm) shall be permitted, provided the lower 6 in. (150 mm) portion of the floor furnace is sealed by the manufacturer to prevent entrance of water.

10.10.8.3
Where the clearances in 10.10.8.1 and 10.10.8.2 are not present, the ground below and to the sides shall be excavated to form a “basin-like” pit under the furnace so that the required clearance is provided beneath the lowest portion of the furnace.

10.10.8.3.1
A 12 in. (300 mm) clearance shall be provided on all sides except the control side.

10.10.8.3.2
The control side shall have an 18 in. (460 mm) clearance.

10.10.10 Seepage Pan.

Important Notice: This document is the copyright property of the National Fire Protection Association (NFPA), Copyright © 2025 NFPA, and may not be used for any other purpose or distributed to any other persons or parties.

10.10.10.1
Where the excavation exceeds 12 in. (300 mm) in depth or water seepage is likely to collect, a watertight copper pan, concrete pit, or other corrosion-resistant material shall be used, unless drainage is provided or the appliance is sealed by the manufacturer to meet this condition.

10.10.10.2
A copper pan shall be made of not less than 16 oz/ft^2 (4.9 kg/m^2) sheet copper.

10.10.10.2.1
The pan shall be anchored in place to prevent floating.

10.10.10.2.2
The walls of the pan shall extend at least 4 in. (100 mm) above the ground level.

10.10.10.2.3
The walls of the pan shall have at least 18 in. (460 mm) of horizontal clearance on the control side and at least 6 in. (150 mm) of horizontal clearance on all other sides.

10.10.12 Upper Floor Installations.

Floor furnaces meeting the following requirements shall be permitted to be installed in an upper floor:

(1) The furnace assembly shall project below into a utility room, closet, garage, or similar nonhabitable space.

(2) The floor furnace shall be enclosed completely with means for air intake to comply with Section 9.3, with access for servicing, with minimum furnace clearances of 6 in. (150 mm) to all sides and bottom, and with the enclosure constructed of Portland cement plaster, metal lath, or other noncombustible material.

10.10.13 First Floor Installation.

10.10.13.1
Floor furnaces installed in the first or ground floors of buildings shall not be required to be enclosed except as required by 10.10.13.2.

10.10.13.2
Where the basements of buildings have been converted to apartments or sleeping quarters, the following shall apply:

(1) Floor furnaces shall be enclosed as specified in 10.10.12.

(2) Enclosures shall project into nonhabitable spaces.

10.11.3.2

Floor-mounted food service appliances that are not listed for installation on a combustible floor shall complywith one of the following:

(1) The appliance shall be installed in accordance with 10.11.4.
(2) Where the appliance is set on legs that provide not less than 18 in. (460 mm) open space under the base of the appliance or where it has no burners and no portion of

Important Notice: This document is the copyright property of the National Fire Protection Association (NFPA), Copyright © 2025 NFPA, and may not be used for any other purpose or distributed to any other persons or parties.

any oven or broiler within 18 in. (460 mm) of the floor, it shall be permitted to be installed on a combustible floor without special floor protection if at least one sheet metal baffle is between the burner and the floor.

(3) Where the appliance is set on legs that provide not less than 8 in. (200 mm) open space under the base of the appliance, it shall be permitted to be installed on combustible floors in accordance with the following:

a) The floor under the appliance shall be protected with not less than 3/8 in. (9.5 mm) insulating millboard covered with sheet metal not less than 0.0195 in. (0.5 mm) thick.

b) The floor protection shall extend not less than 6 in. (150 mm) beyond the appliance on all sides.

(4) Where the appliance is set on legs that provide not less than 4 in. (100 mm) under the base of the appliance, the following shall apply:

(a) The floor under the appliance shall be protected with hollow masonry not less than 4 in. (100 mm) in thickness covered with sheet metal not less than 0.0195 in. (0.5 mm) thick.

(b) Masonry courses as described in 10.11.3.2(3)(a) shall be laid with ends unsealed and joints matched in such a way as to provide for free circulation of air through the masonry.

(4) Where the appliance does not have legs at least 4 in. (100 mm) high, it shall be permitted to be installed on combustible floors in accordance with the folllwing:

(a) The floor under the appliance shall be protected by two courses of 4 in. (100 mm) hollow masonry covered with steel plate not less than 3/16 in. (4.8 mm) in thickness.

(b) Masonry courses shall be laid at right angles and with ends unsealed and joints matched such that free circulation of air is provided through the masonry.

10.11.4.2

The construction described in 10.11.4.1 shall, in all cases, extend not less than 12 in. (300 mm) beyond the appliance on all sides.

10.11.5 Combustible Material Adjacent to Cooking Top.

10.11.5.1
Food service ranges shall be installed to provide clearance to combustible material of not less than 18 in. (460 mm) horizontally for a distance up to 2 ft (0.6 m) above the surface of the cooking top where the combustible material is not completely shielded by high shelving, a warming closet, or other system.

10.11.5.2
Reduced combustible material clearances shall be permitted where protected in accordance with Table 10.2.4.

10.11.6 Use with Casters.

Floor-mounted appliances with casters shall be listed for such construction and installed in accordance with the manufacturer's installation instructions for limiting the movement of the appliance to prevent strain on the connection.

10.11.8* Ventilation.

Means shall be provided to ventilate the space in which a food service appliance is installed to permit complete combustion of the gas.

10.13.3 Clearances.
10.13.3.1
Floor-mounted household cooking appliances, where installed on combustible floors, shall be set on their own bases or legs.

10.13.3.2
Floor-mounted household cooking appliances shall not interfere with combustion air, accessibility for operation, and servicing.

Important Notice: This document is the copyright property of the National Fire Protection Association (NFPA), Copyright © 2025 NFPA, and may not be used for any other purpose or distributed to any other persons or parties.

10.13.3.3* Vertical Clearance Above Cooking Top.

10.13.3.3.1
Household cooking appliances shall have a vertical clearance above the cooking top of not less than 30 in. (760 mm) to combustible material or metal cabinets.

10.13.3.3.2
A minimum clearance of 24 in. (610 mm) shall be permitted when one of the following applies:

(1) The underside of the combustible material or metal cabinet above the cooking top is protected with not less than 1/4 in. (6 mm) insulating millboard covered with sheet metal not less than 0.0122 in. (0.3 mm) thick.

(2) A metal ventilating hood of sheet metal not less than 0.0122 in. (0.3 mm) thick is installed above the cooking top with a clearance of not less than 1/4 in. (6 mm) between the hood and the underside of the combustible material or metal cabinet, and the hood is at least as wide as the appliance and is centered over the appliance.

(3) A cooking appliance or microwave oven is installed over a cooking appliance and conforms to the terms of the upper appliance's manufacturer's installation instructions.

10.14.2.1 Enclosed-Type.

Clearance for enclosed-type illuminating appliances shall comply with the following:

(1) Unlisted enclosed illuminating appliances installed outdoors shall be installed with clearances in any direction from combustible material of not less than 12 in. (300 mm).

(2) Unlisted enclosed illuminating appliances installed indoors shall be installed with clearances in any direction from combustible material of not less than 18 in. (460 mm).

10.14.2.2 Open-Flame-Type.

Clearance for open-flame-type illuminating appliances shall comply with the following:

(1) Unlisted open-flame-type illuminating appliances installed outdoors shall comply with the following:

(a) They shall have clearances in accordance with the following:

i. Clearance from combustible material shall not be less than that specified in Table 10.14.2.2.

ii. The distance from ground level to the base of the burner shall be a minimum of 7 ft (2.1 m) where installed within 2 ft (0.6 m) of walkways.

iii. Lesser clearances shall be permitted where acceptable to the authority having jurisdiction.

(b) They shall be equipped with a limiting orifice or other limiting device that maintains a flame height consistent with the clearance from combustible material as given in Table 10.14.2.2.

(2) Appliances designed for flame heights in excess of 30 in. (760 mm) shall comply with the following:

(a) They shall be approved.

(b) They shall be equipped with a safety shutoff device or automatic ignition.

(3) Clearances to combustible material from unlisted open-flame-type illuminating appliances shall be approved.

10.14.4 Installation on Posts.

Important Notice: This document is the copyright property of the National Fire Protection Association (NFPA), Copyright © 2025 NFPA, and may not be used for any other purpose or distributed to any other persons or parties.

10.14.4.1
Illuminating appliances designed for installation on a post shall be attached to a post in accordance with the manufacturer's instructions.

10.14.4.2
The strength and rigidity of posts greater than 3 ft (0.9 m) in height shall be at least equivalent to that of a 2½ in. (64 mm) diameter post constructed of 0.064 in. (1.6 mm) thick steel or a 1 in. NPS (25 DN) Schedule 40 steel pipe.

10.14.4.3
Posts 3 ft (0.9 m) or less in height shall not be smaller than a ¾ in. NPS (20 DN) Schedule 40 steel pipe.

10.14.4.4
Drain openings shall be provided near the base of posts where water collecting inside the posts is possible.

10.16.2 Support.

10.16.2.1
Suspended-type infrared heaters shall be fixed in position independent of gas and electric supply lines.

10.16.2.2
Hangers and brackets for infrared heaters shall be constructed of noncombustible material.

10.16.2.3
Infrared heaters subject to vibration shall be provided with vibration-isolating hangers.

10.16.3 Clearance.

The installation of infrared heaters shall meet the following clearance requirements:

(1) Listed infrared heaters shall be installed with clearances from combustible material in accordance with the manufacturer's installation instructions.

(2) Unlisted infrared heaters shall be installed with clearances from combustible material in a manner acceptable to the authority having jurisdiction.

(3) In locations used for the storage of combustible materials, signs shall be posted to specify the maximum permissible stacking height to maintain required clearances from the infrared heater to the combustibles.

10.16.5 Installation in Commercial Garages and Aircraft Hangars.

Overhead heaters installed in garages for more than three motor vehicles or in aircraft hangars shall be listed and installed in accordance with 9.1.11 and 9.1.12.

10.17.2.4

Domestic open-top broiler units incorporating an integral exhaust system and listed for use without a ventilating hood shall not be required to be provided with a ventilating hood if installed in accordance with 10.13.3.3.2(1).

10.18 Outdoor Cooking Appliances.

Outdoor cooking appliances shall be listed in accordance with ANSI Z83.11/CSA 1.8, *Gas Food Service Equipment*; ANSI Z21.58/CSA 1.6, *Outdoor Cooking Gas Appliances*; or ANSI Z21.89/CSA 1.18, *Outdoor Cooking Specialty Gas Appliances,* and installed in accordance with the manufacturer's installation instructions.

10.19.4* Temperature- or Pressure-Limiting Devices.

Where a pool heater is provided with overtemperature protection only and is installed with any device in the discharge line of the heater that can restrict the flow of water from the heater to the pool, a pressure-relief valve shall be installed either in the heater or between the heater and the restrictive device.

A.10.19.4

Important Notice: This document is the copyright property of the National Fire Protection Association (NFPA), Copyright © 2025 NFPA, and may not be used for any other purpose or distributed to any other persons or parties.

Examples of restrictive devices include check valves, shutoff valves, therapeutic pool valving, and flow nozzles.

10.20.2 Clearance.

10.20.2.1
Refrigerators shall be installed with clearances for ventilation at the top and back in accordance with the manufacturers' instructions.

10.20.2.2
Where manufacturers' instructions are not available, a clearance of at least 2 in. (50 mm) between the back of the refrigerator and the wall and at least 12 in. (300 mm) above the top shall be provided.

10.21.2* Prohibited Installations.

Unvented room heaters shall not be installed in bathrooms or bedrooms, except as provided in 10.21.2.1 and 10.21.2.2.

10.21.2.1
Where approved, one listed wall-mounted, unvented room heater equipped with an oxygen depletion safety shutoff system shall be permitted to be installed in a bathroom if the input rating does not exceed 6000 Btu/hr (1760 W/hr) and combustion and ventilation air is provided as specified in 10.1.2.

10.21.2.2
Where approved, one listed wall-mounted unvented room heater equipped with an oxygen depletion safety shutoff system shall be permitted to be installed in a bedroom if the input rating does not exceed 10,000 Btu/hr (2930 W/hr) and combustion and ventilation air is provided as specified in 10.1.2.

10.21.4 Wall-Mounted Room Heaters.

Wall-mounted room heaters shall not be installed in, or attached to, walls of combustible material unless listed for such installation.

10.22 Stationary Gas Engines.

10.22.1
The installation of gas engines shall conform to NFPA 37.

10.22. 2

Stationary gas engines shall not be rigidly connected to the gas supply piping.

10.23.1 Clearance.

A listed gas-fired toilet shall be installed in accordance with the manufacturer's installation instructions and with the required clearance for use, cleanout, and servicing.

10.23.3 Installation.

Vents or vent connectors that are capable of being contacted during use of the room in which the toilet is installed shall be protected or shielded to prevent such contact.

10.24.3 Clearance for Suspended-Type Unit Heaters.

Suspended-type unit heaters shall meet the following requirements:

(1) Unit heaters shall be installed with clearances from combustible material of not less than 18 in. (460 mm) at the sides, 12 in. (300 mm) at the bottom, and 6 in. (150 mm) above the top where the unit heater has an internal draft hood, or 1 in. (25 mm) above the top of the sloping side of a vertical draft hood.
(2) Unit heaters listed for reduced clearances shall be installed in accordance with the manufacturer's installation instructions.

(3) Clearances for servicing shall comply with the manufacturers' installation instructions.

Important Notice: This document is the copyright property of the National Fire Protection Association (NFPA), Copyright © 2025 NFPA, and may not be used for any other purpose or distributed to any other persons or parties.

10.25.2.1
Wall furnaces shall be installed in accordance with the manufacturer's installation instructions.

10.25.2.2
Wall furnaces installed in or attached to combustible material shall be listed for such installation.

10.25.2. 3 Type B-W Gas Vent Systems for Wall Furnaces.

10.25.2.3.1

Vented wall furnaces connected to a Type B-W gas vent system listed only for a single story shall be installed only in single-story buildings or the top story of multistory buildings.

10.25.2.3.2
Vented wall furnaces connected to a Type B-W gas vent system listed for installation in multistory buildings shall be permitted to be installed in single-story or multistory buildings.

10.25.2.3.3
Type B-W gas vents shall be attached directly to a solid header plate that serves as a firestop at that point and the solid header is permitted to be an integral part of the vented wall furnace, as illustrated in Figure 10.25.2.3.3.

Figure 10.25.2.3.3 Installation of Type B-W Gas Vents for Vented Wall Furnaces.

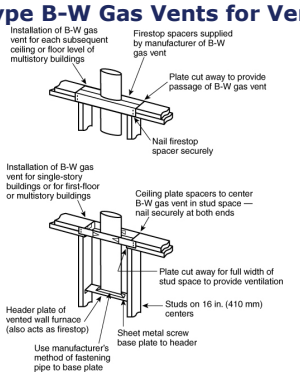

10.25.2.3.4
The stud space in which the vented wall furnace is installed shall be ventilated at the first ceiling level by installation of the ceiling plate spacers furnished with the gas vent.

10.25.2.3.5
Firestop spacers shall be installed at each subsequent ceiling or floor level penetrated by the vent.

10.25.2.4

Direct-vent wall furnaces shall be installed with the combustion air intake terminal outdoors.

10.25.2.5

Panels, grilles, and access doors that are required to be removed for normal servicing operations shall not be attached to the building. *(For additional information on the venting of wall furnaces, see Chapter 12.)*

10.25.3 Location.

10.25.3.1
The location of wall furnaces shall not cause a hazard to walls, floors, curtains, furniture, or doors.

10.25.3.2

Important Notice: This document is the copyright property of the National Fire Protection Association (NFPA), Copyright © 2025 NFPA, and may not be used for any other purpose or distributed to any other persons or parties.

Wall furnaces installed between bathrooms and adjoining rooms shall not circulate air from bathrooms to other parts of the building.

10.26.2 Installation in Bedrooms and Bathrooms.

Water heater installations in bedrooms and bathrooms shall comply with one of the following:

(1) The water heater shall be installed in a closet in accordance with the following:
a) The closet shall be equipped with a weather-stripped door with no openings and with a self-closing device.
b) All combustion air shall be obtained from the outdoors in accordance with 9.3.3.

(2) The water heater shall be the direct-vent type.

10.26.3 Clearance.

10.26.3.1
The clearances shall not interfere with combustion air, draft hood clearance and relief, and accessibility for servicing.

10.26.3.2
Listed water heaters shall be installed in accordance with the manufacturer's installation instructions.

10.26.4 Pressure-Relief Devices.

10.26.4.1
A water heater installation shall be provided with overpressure protection by means of a device listed in accordance with ANSI Z21.22/CSA 4.4, *Relief Valves for Hot Water Supply Systems*, and installed in accordance with the manufacturer’s installation instructions.

10.26.4.2
The pressure setting of the device shall exceed the water service pressure and not exceed the maximum pressure rating of the water heater.

10.26.5 Temperature-Limiting Devices.

The installation of water heaters and hot water storage vessels shall be provided with overtemperature protection by means of a listed device installed in accordance with the manufacturer’s installation instructions.

10.26.6 Temperature, Pressure, and Vacuum Relief Devices.

10.26.6.1
Temperature-, pressure-, and vacuum-relief devices, or combinations thereof and automatic gas-shutoff devices shall be installed in accordance with the manufacturer's installation instructions.

10.26.6.2
A shutoff valve shall not be placed between the relief valve and the water heater or on discharge pipes between such valves and the atmosphere.

10.26.6.3
The hourly Btu discharge capacity or the rated steam relief capacity of the device shall not be less than the input rating of the water heater.

10.26.7 Automatic Instantaneous Type: Cold Water Supply.

The water supply to an automatic instantaneous water heater that is equipped with a water flow–actuated control shall provide the required pressure to operate the control when water is drawn from the highest faucet served by the heater.

10.27 Compressed Natural Gas (CNG) Vehicular Fuel Systems.

10.27.1
The installation of compressed natural gas (CNG) fueling (dispensing) systems shall comply with NFPA 52.

10.27.2

Important Notice: This document is the copyright property of the National Fire Protection Association (NFPA), Copyright © 2025 NFPA, and may not be used for any other purpose or distributed to any other persons or parties.

Residential CNG fueling appliances shall be listed in accordance with ANSI/CSA NGV 5.1, *Residential Fueling Appliances (RFA)*, and installed in accordance with the appliance manufacturer's installation instructions.

10.27.3
Nonresidential CNG fueling appliances shall be listed in accordance with ANSI/CSA NGV 5.2, *Vehicle Fueling Appliances (VFA)*, and installed in accordance with the appliance manufacturer's installation instructions.

10.28 Appliances for Installation in Manufactured Housing.

10.28.1
Appliances installed in manufactured housing after the initial sale shall either be listed for installation in manufactured housing or be approved.

10.28.2
Appliances shall be installed in accordance with the requirements of this code and the manufacturers' installation instructions.

10.28.3
Appliances installed in the living space of manufactured housing shall comply Section 9.3.

10.29 Fuel Cell Power Plants.

10.29.1
Fuel cell power plants with a power output of less than 50 kW shall be listed in accordance with ANSI/CSA FC 1, *Fuel Cell Technologies — Part 3-100: Stationary Fuel Cell Power Systems — Safety*, and installed in accordance with the manufacturer's instructions.

10.29.2
Fuel cell power plants with a power output of greater than 50 kW shall be installed in accordance with NFPA 853.

10.30 Outdoor Open-Flame Decorative Appliances.

Permanently fixed in place, outdoor open-flame decorative appliances shall be installed in accordance with 10.30.1 through 10.30.2.

10.30.1 Application.

10.30.1.1
Outdoor open-flame decorative appliances shall be listed in accordance with ANSI Z21.97/CSA 2.41, *Outdoor Decorative Gas Appliances.*

10.30.1.2
Outdoor open-flame decorative appliances shall be installed in accordance with the manufacturer's installation instructions.

10.31 Outdoor Infrared Heaters.

10.31.1
Outdoor infrared heaters for residential and commercial applications shall be listed in accordance with ANSI Z83.26/CSA 2.27, *Gas-Fired Outdoor Infrared Patio Heaters.*

10.31.2
Outdoor infrared heaters for residential and commercial applications shall be installed in accordance with the manufacturer's installation instructions.

Second Revision No. 27-NFPA 54-2025 [Global Input]

See attached Word Document for changes to chapter ~~11 from~~ 11 on the NFPA Manual of Style ~~Task Group~~

Supplemental Information

File Name	Description	Approved
54-2024_editorial_review_Chapter_11_SD_For_Revision.docx	Prod: See attached Word document on changes for chapter 11. The sections will most likely need some form of renumbering. Additionally sections that are not being revised are not shown.	
54_Global_SR-27_editorial_review_Chapter_11_SD_For_Revision.docx	For prod use	
54_Global_SR-27_editorial_review_Chapter_11_SD_For_Revision_for_ballot.docx	For ballot	

Submitter Information Verification

Committee: NFG-AAA
Submittal Date: Fri Oct 10 10:58:30 EDT 2025

Committee Statement

Committee Statement: The changes are to align chapter 11 to the NFPA Manual of Style.
Response Message: SR-27-NFPA 54-2025

Public Comment No. 43-NFPA 54-2025 [Global Input]

Important Notice: This document is the copyright property of the National Fire Protection Association (NFPA), Copyright © 2025 NFPA, and may not be used for any other purpose or distributed to any other persons or parties.

Chapter 11 Procedures to Be Followed to Place Appliance in Operation

11.1.1* Adjusting Input.

11.1.1.1*
The input rate of the burner shall be adjusted in accordance with the appliance manufacturer's instructions.

A.11.1.1.1
The input rate can be adjusted by changing the size of a fixed orifice, changing the adjustment of an adjustable orifice, or readjusting the appliance’s gas pressure regulator outlet pressure (where a regulator is provided in the appliance).

[Text moving to newly created 11.1.1.1]11.1.1.2 [Move to 11.1.1.1.1]

The input rate shall be determined by one of the following:

(1) Checking burner input by using a gas meter

(2) Checking burner input by using manifold pressure and orifice size

11.1.1.2 [Text moved from 11.1.1]
Firing at a rate in excess of the nameplate rating shall be prohibited.

11.1.1.3

Overfiring shall be prohibited.

11.1.2 High Altitude.

11.1.2.1
Gas input ratings of appliances shall be used for elevations up to 2000 ft (600 m).

11.1.2.2
The input ratings of appliances operating at elevations above 2000 ft (600 m) shall be reduced in accordance with one of the following methods:

(1) At the rate of 4 percent for each 1000 ft (300 m) above sea level

(2) As permitted by the authority having jurisdiction

(3) In accordance with the manufacturer's installation instructions

11.2* Primary Air Adjustment.

11.2.1
The primary air for injection -type (Bunsen) burners shall be adjusted for flame characteristics in accordance with the appliance manufacturer’s instructions.

11.2.2
After setting the primary air, the adjustment means shall be secured in position.

11.3 Safety Shutoff Devices.

11.3.1
Where a safety shutoff device is provided, it shall be checked for operation within the parameters provided by the manufacturer and adjusted in accordance with the appliance manufacturer’s instructions.

11.3.2
Where a safety shutoff device does not turn off the gas supply in the event of pilot outage or other ignition malfunction, it shall be serviced or replaced with a new device.

11.4 Automatic Ignition.

11.4.1

Important Notice: This document is the copyright property of the National Fire Protection Association (NFPA), Copyright © 2025 NFPA, and may not be used for any other purpose or distributed to any other persons or parties.

Appliances supplied with means for automatic ignition shall be checked for operation within the parameters provided by the manufacturer.

11.4.2
Any adjustments to the automatic ignition shall comply with the manufacturer's installation instructions.

11.5 Protective Devices.

11.5.1*
Where required by the manufacturer's installation instructions, all protective devices furnished with the appliance shall be checked for operation within the parameters provided by the manufacturer.

A.11.5.1
Examples of protective devices include limit controls, fan controls to blower, temperature and pressure relief valves, low-water cutoff devices, and manual operating features.

11.5.2
Any adjustments made to protective devices furnished with the appliance shall comply with the manufacturer's installation instructions.

11.6* Checking the Draft.

Draft-hood-equipped appliances shall be checked to verify that there is no draft hood spillage after 5 minutes of main burner operation under the following conditions:

(1) The building or structure envelope is complete and intact.

(2) All combustion air systems and openings are in place.

(3) All air-exhausting appliances, power-vented appliances, and exhaust fans are operating.

(4) All air-moving equipment used for heating, cooling, or ventilation is operating.

(5) The draft hood spillage test is conducted only after all of the conditions in 11.6(1) through 11.6(4) are established.

11.7 Operating Instructions.

11.7.1
Operating instructions shall be furnished.

11.7.2
Operating instructions shall be left in a readily accessible location for use by the consumer.

Second Revision No. 28-NFPA 54-2025 [Global Input]

See attached Word Document for changes to chapter ~~12 from~~ 12 on the NFPA Manual of Style ~~Task Group~~

Supplemental Information

File Name	Description	Approved
54-2024_editorial_review_Chapter_12_SD_For_Revision.docx	Prod: See attached Word document on changes for chapter 12. The sections will most likely need some form of renumbering. Additionally sections that are not being revised are not shown.	
54_Global_SR-28_editorial_review_Chapter_12_SD_For_Revision.docx	For prod use	
54_Global_SR-28_editorial_review_Chapter_12_SD_For_Revision_for_ballot.docx	For ballot	

Submitter Information Verification

Committee: NFG-AAA
Submittal Date: Fri Oct 10 11:01:31 EDT 2025

Committee Statement

Committee Statement: The changes are to align chapter 12 to the NFPA Manual of Style
Response Message: SR-28-NFPA 54-2025

Public Comment No. 44-NFPA 54-2025 [Global Input]

Important Notice: This document is the copyright property of the National Fire Protection Association (NFPA), Copyright © 2025 NFPA, and may not be used for any other purpose or distributed to any other persons or parties.

12.3.2 Appliances Not Required to Be Vented.

The following appliances shall not be required to be vented:

(1) Listed ranges

(2) Built-in cooking units listed and marked for optional venting

(3) Listed hot plates

(4) Listed Type 1 clothes dryers exhausted in accordance with Section 10.4

(5) A single listed booster-type (automatic instantaneous) water heater in a commercial kitchen having a mechanical exhaust system and complying the following:

(a) Heater is designed and used solely for the sanitizing rinse requirements of a dishwashing machine.
(b) Heater is installed with the draft hood, if required, in place and unaltered not less than 36 in. (910 mm) vertically and 6 in. (150 mm) horizontally from any surface other than the appliance.

(6) Listed refrigerators

(7) Counter appliances

(8) Room heaters listed for unvented use

(9) Direct gas–fired make-up air heaters

(10) Other appliances listed for unvented use and not provided with flue collars

(11) Specialized appliances of limited input such as laboratory burners or gas lights

12.3.2.3

Where the calculation in 12.3.2.2 includes the volume of an adjacent room or space, the room or space in which the appliances are installed shall be directly connected to the adjacent room or space by a doorway, archway, or other opening of comparable size that cannot be closed.

12.3.5.2

Through-the-wall vent terminations for listed direct-vent appliances shall be in accordance with 12.9.1.

12.4.3.5

Where a mechanical draft system is employed, provision shall be made to prevent the flow of gas to the main burners when the draft system is not performing so as to satisfy the operating requirements of the appliance.

12.4.4 Ventilating Hoods and Exhaust Systems.

Where automatically operated appliances other than food service appliances are vented through a ventilating hood or exhaust system equipped with a damper or with a power means of exhaust, provisions shall be made to allow the flow of gas to the main burners as follows *(See also, A.12.3.3.)*

(1) When the damper is open to a position to vent the appliance
(2) When the power means of exhaust is in operation

12.4.5.2

Important Notice: This document is the copyright property of the National Fire Protection Association (NFPA), Copyright © 2025 NFPA, and may not be used for any other purpose or distributed to any other persons or parties.

Where a venting system passes through an above-ceiling air space or other non-ducted portion of an air-handling system, it shall conform to one of the following requirements:

(1) The venting system shall be a listed special gas vent, other system serving a Category III or Category IV appliance, or other positive-pressure vent, with joints sealed in accordance with the appliance or vent manufacturer's instructions.

(2) The vent system shall be installed such that no fittings or joints between sections are installed in the above-ceiling space.

(3) The venting system shall be installed in a conduit or enclosure with joints between the interior of the enclosure and the ceiling space sealed.

12.5.2 Plastic Piping.

12.5.2.1
Where plastic piping is used to vent an appliance, both of the following shall apply:

(1) The appliance shall be listed for use with such venting materials.
(2) The appliance manufacturer's installation instructions shall identify the specific plastic piping material.

12.5.2.2

The plastic pipe venting materials shall be labeled in accordance with the product standards specified by the appliance manufacturer or shall be listed and labeled in accordance with UL 1738, *Venting Systems for Gas-Burning Appliances, Categories II, III, and IV*.

12.6.1.1
Factory-built chimneys shall be listed in accordance with UL 103, *Factory-Built Chimneys for Residential Type and Building Heating Appliances;* UL 959, *Medium Heat Appliance Factory-Built Chimneys*; or UL 2561, *1400 Degree Fahrenheit Factory-Built Chimneys*.

12.6.1.2
Factory-built chimneys used to vent appliances that operate at positive vent pressure shall be listed for such application.

12.6.1. 3

Metal chimneys shall be built and installed in accordance with NFPA 211.

12.6.1.4* Masonry Chimneys.

12.6.1.4.1
Masonry chimneys shall be built and installed in accordance with NFPA 211.

12.6.1.4.2
Masonry chimneys shall be lined with one of the following:

(1) Approved clay flue lining

(2) A chimney lining system listed and labeled in accordance with UL 1777, *Chimney Liners*

(3) Other approved material that resists corrosion, erosion, softening, or cracking from vent gases at temperatures up to 1800°F (982°C)

12.6.1.4.3
Masonry chimney flues lined with a chimney lining system specifically listed for use with listed appliances with draft hoods, Category I appliances, and other appliances listed for use with Type B vents shall be permitted.

12.6.1.4.3.1
The liner shall be installed in accordance with the liner manufacturer’s installation instructions.

Important Notice: This document is the copyright property of the National Fire Protection Association (NFPA), Copyright © 2025 NFPA, and may not be used for any other purpose or distributed to any other persons or parties.

12.6.1.4.3.2
A permanent identifying label shall be attached at the point where the connection is to be made to the liner.

12.6.1.4.3.3
The label shall read "This chimney liner is for appliances that burn gas only. Do not connect to solid or liquid fuel–burning appliances or incinerators."

12.6.3.1

The effective area of a chimney venting system serving listed appliances with draft hoods, Category I appliances, and other appliances listed for use with Type B vents shall comply with 12.6.3.2 through 12.6.3.4, the methods listed in Chapter 13, or other engineering methods.

12.6.3.2

The effective areas of the vent connector and chimney flue of a venting system serving a single appliance with a draft hood shall be not less than the area of the appliance flue collar or draft hood outlet or greater than seven times the draft hood outlet area.

12.6.3.3
The effective area of the chimney flue of a venting system serving two appliances with draft hoods shall be not less than the area of the larger draft hood outlet plus 50 percent of the area of the smaller draft hood outlet or greater than seven times the smaller draft hood outlet area.

12.6.3.4
Chimney venting systems using mechanical draft shall be sized in accordance with engineering methods.

12.6.4.1

Before replacing an existing appliance or connecting a vent connector to a chimney, the chimney passageway shall be examined to ascertain that it is clear and free of obstructions.

12.6.4.2
The chimney passageway shall be cleaned if previously used for venting solid- or liquid-fuel-burning appliances or fireplaces.

12.6.4. 3

Chimneys shall be lined in accordance with NFPA 211.

12.6.4. 4

Cleanouts shall be examined.

12.6.4.5
Where cleanouts do not remain closed and gastight when not in use, they shall be repaired or replaced.

12.6.4. 6

When inspection reveals that an existing chimney is not safe for the intended application, it shall be repaired, rebuilt, lined, relined, or replaced with a vent or chimney to conform to NFPA 211.

12.6.4.7
Vents and chimneys shall be compatible withthe appliances to be connected.

12.6.5.2

Where one chimney serves gas appliances and liquid-fuel-burning appliances, the appliances shall be either connected through separate openings or connected through a single opening where joined by a fitting located as close as practical to the chimney.

12.6.5.3
Where two or more openings are provided into one chimney flue, they shall be at different levels.

12.6.5.4

Important Notice: This document is the copyright property of the National Fire Protection Association (NFPA), Copyright © 2025 NFPA, and may not be used for any other purpose or distributed to any other persons or parties.

Where the gas appliance is automatically controlled, it shall be equipped with a safety shutoff device.

12.6.5.5*

A listed combination gas- and solid-fuel-burning appliance connected to a single chimney flue shall be equipped with a manual reset device to shut off gas to the main burner in the event of sustained backdraft or flue gas spillage.

12.6.5.6
The chimney flue shall be sized to vent the appliance.

12.6.5. 7

A single chimney flue serving a listed combination gas- and oil-burning appliance shall be sized in accordance with the appliance manufacturer's instructions.

12.6.6 Support of Chimneys.

12.6.6.1
All portions of chimneys shall be supported for the design and weight of the materials employed.

12.6.6.2
Listed factory-built chimneys shall be supported and spaced in accordance with the manufacturer's installation instructions.

12.6.7 Cleanouts.

12.6.7.1
Where a chimney that formerly carried flue products from liquid- or solid-fuel-burning appliances is used with an appliance using fuel gas, an accessible cleanout shall be provided.

12.6.7.2
The cleanout shall have a tight-fitting cover.

12.6.7.3
The cleanout shall be installed so its upper edge is at least 6 in. (150 mm) below the lower edge of the lowest chimney inlet opening.

12.6.8.1

The remaining space surrounding a chimney liner, gas vent, special gas vent, or plastic piping installed within a masonry chimney shall not be used to vent another appliance, except as provided in 12.6.8.2.

12.6.8.2
The insertion of another liner or vent within the chimney shall be permitted as provided in this code and the liner or vent manufacturer’s instructions.

12.6.8. 3

The remaining space surrounding a chimney liner, gas vent, special gas vent, or plastic piping installed within a masonry, metal, or factory-built chimney flue shall not be used to supply combustion air.

12.6.8.4
Direct-vent appliances designed for installation in a solid-fuel-burning fireplace shall be permitted where installed in accordance with the manufacturer’s installation instructions.

12.6.9 Insulation Shield.

12.6.9.1
Where a factory-built chimney passes through insulated assemblies, an insulation shield constructed of steel having a minimum thickness of 0.0187 in. (0.4712 mm) (nominal 26 gage) shall be installed to provide clearance between the chimney and the insulation material.

12.6.9.2
The clearance shall not be less than the clearance to combustibles specified by the chimney manufacturer's installation instructions.

Important Notice: This document is the copyright property of the National Fire Protection Association (NFPA), Copyright © 2025 NFPA, and may not be used for any other purpose or distributed to any other persons or parties.

12.6.9.3
Where chimneys pass through attic space, both of the following shall apply:

(1) The shield shall terminate not less than 2 in. (51 mm) above the insulation materials.
(2) The shield shall be secured in place to prevent displacement.

12.7.1 Materials.

12.7.1.1
Type B and Type BW gas vents shall be listed in accordance with UL 441, *Gas Vents*.

12.7.1.2
Vents for listed combination gas- and oil-burning appliances shall be listed in accordance with UL 641, *Type L Low-Temperature Venting Systems*.

12.7.2 Installation.

The installation of gas vents shall meet the following requirements:

(1) Gas vents shall be installed in accordance with the manufacturer's installation instructions.

(2) A Type B-W gas vent shall have a listed capacity not less than that of the listed vented wall furnace to which it is connected.

(3) Gas vents installed within masonry chimneys shall comply with the following:

(a) The vents shall be installed in accordance with the manufacturer's installation instructions.
(b) The vents shall be identified with a permanent label, installed at the point where the vent enters the chimney, containing the following language: "This gas vent is for appliances that burn gas. Do not connect to solid- or liquid-fuel-burning appliances or incinerators."

(4) Screws, rivets, and other fasteners shall not penetrate the inner wall of double-wall gas vents, except at the transition from the appliance draft hood outlet, flue collar, or single-wall metal connector to a double-wall vent.

12.7.3 Gas Vent Termination.

The termination of gas vents shall comply with the following requirements:

(1) A gas vent shall terminate in accordance with one of the following:

(a) For vents that are 12 in. (300 mm) or less in size and located not less than 8 ft (2.4 m) from a vertical wall or similar obstruction above the roof in accordance with Figure 12.7.3 and Table 12.7.3.

(b) For vents that are over 12 in. (300 mm) in size or are located less than 8 ft (2.4 m) from a vertical wall or similar obstruction not less than 2 ft (0.6 m) above the highest point where they pass through the roof and not less than 2 ft (0.6 m) above any portion of a building within 10 ft (3.0 m) horizontally.

(c) For industrial appliances as provided in 12.3.4

(d) For direct- vent systems as provided in 12.3.5

(e) For appliances with integral vents as provided in 12.3.6

(f) For mechanical draft systems as provided in 12.4.3

(g) For ventilating hoods and exhaust systems as provided in 12.4.4

Important Notice: This document is the copyright property of the National Fire Protection Association (NFPA), Copyright © 2025 NFPA, and may not be used for any other purpose or distributed to any other persons or parties.

(2) A Type B or a Type L gas vent shall terminate at least 5 ft (1.5 m) in vertical height above the highest connected appliance draft hood or flue collar.

(3) A Type B-W gas vent shall terminate at least 12 ft (3.7 m) in vertical height above the bottom of the wall furnace.

(4) A gas vent extending through an exterior wall shall not terminate adjacent to the wall or below eaves or parapets, except as provided in 12.3.5 and 12.4.3.

(5) Decorative shrouds shall not be installed at the termination of gas vents except where such shrouds are listed for use with the specific gas venting system and are installed in accordance with the manufacturer's installation instructions.

(6) All gas vents shall extend through the roof flashing, roof jack, or roof thimble and terminate with a listed cap or listed roof assembly.

(7) A gas vent shall terminate at least 3 ft (0.9 m) above a forced air inlet located within 10 ft (3.0 m).

12.7.4.1* Category I Appliances.

12.7.4.1.1
The sizing of natural draft venting systems serving one or more listed appliances equipped with a draft hood or appliances listed for use with a Type B gas vent, installed in a single story of a building, shall comply with 12.7.4.1.1 through 12.7.4.1.4, the methods listed in Chapter 13, or other engineering methods.

12.7.4.1.2
Vents serving fan-assisted combustion system appliances, or combinations of fan-assisted combustion system and draft-hood-equipped appliances, shall be sized in accordance with Chapter 13 or other engineering methods.

12.7.4.1.3
For sizing an individual gas vent for a single, draft-hood-equipped appliance, the effective area of the vent connector and the gas vent shall be not less than the area of the appliance draft hood outlet or greater than seven times the draft hood outlet area.

12.7.4.1.4
For sizing a gas vent connected to two appliances with draft hoods, the effective area of the vent shall be not less than the area of the larger draft hood outlet plus 50 percent of the area of the smaller draft hood outlet or greater than seven times the smaller draft hood outlet area.

12.7.4.2 Vent Offsets.

12.7.4.2.1
Type B and Type L vents sized in accordance with 12.7.4.1(3) or 12.7.4.1(4) shall extend in a generally vertical direction with offsets not exceeding 45 degrees except as permitted by 12.7.4.2.1.1.

12.7.4.2.1.1
A vent system having not more than one 60-degree offset shall be permitted.

12.7.4.2.2
Any angle greater than 45 degrees from the vertical shall be considered horizontal.

12.7.4.2.3
The total horizontal distance of a vent plus the horizontal vent connector serving draft-hood-equipped appliances shall not be greater than 75 percent of the vertical height of the vent.

12.7.4.3 Category II, Category III, and Category IV Appliances.

Important Notice: This document is the copyright property of the National Fire Protection Association (NFPA), Copyright © 2025 NFPA, and may not be used for any other purpose or distributed to any other persons or parties.

12.7.4.3.1
The sizing of gas vents for Category II, Category III, and Category IV appliances shall comply with the appliance manufacturers' instructions.

12.7.4.3.2
The sizing of plastic pipe specified by the appliance manufacturer as a venting material for Category II, Category III, and Category IV appliances shall be in accordance with the appliance manufacturers' instructions.

12.7.5.1
Where a common vent is installed in a multistory installation to vent Category I appliances located on more than one floor level, the venting system shall be designed and installed in accordance with engineering methods.

12.7.5.2
Crawl spaces, basements, and attics shall be considered as floor levels.

12.7.5.3*

All appliances connected to the common vent shall be located in rooms separated from occupiable space.

12.7.5.4
Each room separated from occupiable space shall have provisions for the required supply of combustion, ventilation, and dilution air that is not supplied from the occupiable space.

12.7.5. 5

The size of the connectors and common segments of multistory venting systems for appliances listed for use with a Type B double-wall gas vent shall comply with Table 13.2(a if all of the following apply:

(1) The available total height (*H*) for each segment of a multistory venting system is the vertical distance between the level of the highest draft hood outlet or flue collar on that floor and the centerline of the next highest interconnection tee.

(2) The size of the connector for a segment is determined from the appliance's gas input rate and available connector rise and is not smaller than the draft hood outlet or flue collar size.

(3) The size of the common vertical vent segment, and of the interconnection tee at the base of that segment, is based on the total appliance's gas input rate entering that segment and its available total height.

12.7.7 Marking.

In localities where the authority having jurisication has determined that solid and liquid fuels are used extensively, gas vents shall be permanently identified by a label as follows:

(1) The label shall be attached to the wall or ceiling at a point where the vent connector enters the gas vent.
(2) The label shall read: "This gas vent is for appliances that burn gas. Do not connect to solid- or liquid-fuel-burning appliances or incinerators."

12.8.4.2
Single-wall metal pipe shall be used only for runs directly from the space in which the appliance is located through the roof or exterior wall to the outer air.

12.8.4.3
A pipe passing through a roof shall extend without interruption through the roof flashing, roof jacket, or roof thimble.

12.8.4. 4

Single-wall metal pipe shall neither originate in any unoccupied attic or concealed space nor pass through any attic, inside wall, concealed space, or floor.

Important Notice: This document is the copyright property of the National Fire Protection Association (NFPA), Copyright © 2025 NFPA, and may not be used for any other purpose or distributed to any other persons or parties.

12.8.4. 5
Minimum clearances from single-wall metal pipe to combustible material shall be in accordance with Table 12.8.4.5. **Table 12.8.4.5 Clearances for Connectors**

Appliance	Minimum Distance from Combustible Material			
	Listed Type B Gas Vent Material	Listed Type L Vent Material	Single-Wall Metal Pipe	Factory-Built Chimney Sections
Listed appliance with draft hoods and appliance listed for use with Type B gas vents	As listed	As listed	6 in.	As listed
Residential boilers and furnaces with listed gas conversion burner and with draft hood	6 in.	6 in.	9 in.	As listed
Residential appliances listed for use with Type L vents	Not permitted	As listed	9 in.	As listed
Listed gas-fired toilets	Not permitted	As listed	As listed	As listed
Unlisted residential appliances with draft hood	Not permitted	6 in.	9 in.	As listed
Residential and low-heat appliances other than those above	Not permitted	9 in.	18 in.	As listed
Medium-heat appliance	Not permitted	Not permitted	36 in.	As listed

For SI units, 1 in. = 25.4 mm.

Note: See 12.8.4.6.

12.8.4.6
The clearances specified in Table 12.8.4.5 shall apply unless the installation instructions of a listed appliance or connector specify different clearances.

12.8.4.7
Reduced clearances from single-wall metal pipe to combustible material shall be as specified for vent connectors in Table 10.2.4.

12.8.4. 8

Where a single-wall metal pipe passes through a roof constructed of combustible material, a noncombustible, non-ventilating thimble shall be used at the point of passage.

12.8.4.8.1
The thimble shall extend at least 18 in. (460 mm) above and 6 in. (150 mm) below the roof with the annular space open at the bottom and closed only at the top.

12.8.4.8.2
The thimble shall be sized in accordance with 12.8.4.9.

12.8.4. 9

Single-wall metal pipe shall not pass through a combustible exterior wall unless guarded at the point of passage by a ventilated metal thimble not smaller than the following:

(1) For listed appliances with draft hoods and appliances listed for use with Type B gas vents one of the following shall apply:

(a) The thimble shall be a minimum of 4 in. (100 mm) larger in diameter than the metal pipe.

Important Notice: This document is the copyright property of the National Fire Protection Association (NFPA), Copyright © 2025 NFPA, and may not be used for any other purpose or distributed to any other persons or parties.

(b) Where there is a run of not less than 6 ft (1.8 m) of metal pipe in the opening between the draft hood outlet and the thimble, the thimble shall be a minimum of 2 in. (50 mm) larger in diameter than the metal pipe.

(2)
(3) For listed appliances with draft hoods and appliances listed for use with Type B gas vents, and where there is a run of not less than 6 ft (1.8 m) of metal pipe in the opening between the draft hood outlet and the thimble, the thimble shall be a minimum of 2 in. (50 mm) larger in diameter than the metal pipe.

(3) For unlisted appliances having draft hoods, the thimble shall be a minimum of 6 in. (150 mm) larger in diameter than the metal pipe.

(4) For residential and low-heat appliances, the thimble shall be a minimum of 12 in. (300 mm) larger in diameter than the metal pipe.

12.8.4.10
Where a thimble is not installed, the following shall apply:

(1) All combustible material in the wall shall be removed from the metal pipe to provide the specified clearance from such metal pipe to combustible material.

(2) Any material used to close up the resulting opening shall be noncombustible.

12.8.5 Size of Single-Wall Metal Pipe.
Single-wall metal piping shall comply with the following requirements:

(1) *A venting system of a single-wall metal pipe shall be sized in accordance with one of the following methods and the appliance manufacturer's instructions:

(a) For a draft-hood-equipped appliance, with the methods listed in Chapter 13

(b) For a venting system for a single appliance with a draft hood, as follows:

i. The areas of the connector and the pipe each shall not be less than the area of the appliance flue collar or draft hood outlet, whichever is smaller.
ii. The vent area shall not be greater than seven times the draft hood outlet area.

(c) Approved engineering methods

(2) Where a single-wall metal pipe is used and has a shape other than round, the following shall apply:

i. The pipe shall have an equivalent effective area equal to the effective area of the round pipe for which it is substituted.
ii. The minimum internal dimension of the pipe shall be 2 in. (50 mm).

(3) The vent cap or a roof assembly shall have a venting capacity not less than that of the pipe to which it is attached.

12.9.1
The clearance for through-the-wall direct-vent and non-direct-vent terminals shall comply with Table 12.9.1 and Figure 12.9.1, except as provided in 12.9.2.

12.9.2
The clearances in Table 12.9.1 shall not apply to the combustion air intake of a direct-vent appliance.

12.9. 3

Important Notice: This document is the copyright property of the National Fire Protection Association (NFPA), Copyright © 2025 NFPA, and may not be used for any other purpose or distributed to any other persons or parties.

Where vents, including those for direct-vent appliances or combustion air intake pipes, penetrate outside walls of buildings, the annular spaces around such penetrations shall be permanently sealed using approved materials to prevent entry of combustion products into the building.

12.9. 4
Except as permitted by 12.9.4.1, vent systems for Category IV appliances that terminate through an outside wall of a building and discharge flue gases perpendicular to the adjacent wall shall be located not less than 10 ft (3 m) horizontally from an operable opening in an adjacent building.

12.9.4.1
The requirement in 12.9.4 shall not apply to vent terminals that are 2 ft (0.6 m) or more above or 25 ft (7.6 m) or more below operable openings.

12.11.2.1
A vent connector shall be made of noncombustible, corrosion-resistant material capable of withstanding the vent gas temperature produced by the appliance and designed to withstand anticipated physical damage.

12.11.2.2
Where the vent connector used for an appliance having a draft hood or a Category I appliance is located in, or passes through, an unconditioned area, attic, or crawl space, that portion of the vent connector shall be listed Type B, Type L, or listed vent material having equivalent insulation qualities, except as permitted by 12.11.2.2.1.

12.11.2.3
Single-wall metal pipe located within the exterior walls of the building and located in an unconditioned area other than an attic or a crawl space having a local 99 percent winter design temperature of 5°F (−15°C) or higher shall be permitted.

12.11.2. 4
Vent connectors for residential-type appliances shall comply with the following:

(1) Vent connectors for listed appliances having draft hoods, for appliances having draft hoods and equipped with listed conversion burners, and for Category I appliances that are not installed in attics, crawl spaces, or other unconditioned areas shall be one of the following:

(a) Type B or Type L vent material

(b) Galvanized sheet steel not less than 0.018 in. (0.46 mm) thick

(c) Aluminum (1100 or 3003 alloy or equivalent) sheet not less than 0.027 in. (0.69 mm) thick

(d) Stainless steel sheet not less than 0.012 in. (0.31 mm) thick

(e) Smooth interior wall metal pipe having resistance to heat and corrosion equal to or greater than that of 12.11.2.4(1)(b), 12.11.2.4(1)(c), or 12.11.2.4(1)(d)

(f) A listed vent connector

(2) Vent connectors, except listed insulated vent connectors installed in accordance with the manufacturer's installation instructions, shall not be covered with insulation.

(3)

12.11.2. 5 Low-Heat Appliances.

12.11.2.5.1

A vent connector for a nonresidential low-heat appliance shall be a factory-built chimney section or steel pipe having resistance to heat and corrosion equivalent to that for galvanized pipe as specified in Table 12.11.2.5.

Table 12.11.2.5 Minimum Thickness for Galvanized Steel Vent Connectors for Low-Heat Appliances

Important Notice: This document is the copyright property of the National Fire Protection Association (NFPA), Copyright © 2025 NFPA, and may not be used for any other purpose or distributed to any other persons or parties.

Diameter of Connector (in.)	Minimum Thickness (in.)
Less than 6	0.019
6 to less than 10	0.023
10 to 12 inclusive	0.029
14 to 16 inclusive	0.034
Over 16	0.056

For SI units, 1 in. = 25.4 mm, 1 in.^{2} = 645 mm^2.

12.11.2.5.2
Factory-built chimney sections shall be joined together in accordance with the chimney manufacturer's instructions.

12.11.2. 7 Medium-Heat Appliances.

12.11.2.7.1

1. Vent connectors for medium-heat appliances shall be constructed of factory-built, medium-heat chimney sections or steel of a thickness not less than that specified in Table 12.11.2.7.

Table 12.11.2.7 Minimum Thickness for Steel Vent Connectors for Medium-Heat Appliances

Vent Connector Size		Minimum Thickness (in.)
Diameter (in.)	Area (in.^{2})	
Up to 14	Up to 154	0.053
Over 14 to 16	154 to 201	0.067
Over 16 to 18	201 to 254	0.093
Over 18	Larger than 254	0.123

For SI units, 1 in. = 25.4 mm, 1 in.^{2} = 645 mm^2.

12.11.2.7.2
Vent connectors for medium-heat appliances shall comply with the following:

(1) A steel vent connector for an appliance with a vent gas temperature in excess of 1000°F (538°C) measured at the entrance to the connector shall be lined with medium-duty fire brick or equivalent, as follows:

(a) For a vent connector having a diameter or greatest cross-sectional dimension of 18 in. (460 mm) or less, the lining shall be at least 2⁄2 in. (64 mm) thick.
(b) For a vent connector having a diameter or greatest cross-sectional dimension greater than 18 in. (460 mm), the lining shall be at least 4⁄2 in. (110 mm) thick laid on the 4⁄2 in. (110 mm) bed.
(3) Where factory-built chimney sections are installed, they shall be joined together in accordance with the chimney manufacturer's instructions.

12.11.3.2
Where a single appliance having more than one draft hood outlet or flue collar is installed, the manifold shall be constructed according to the appliance manufacturer's instructions.

12.11.3.2.1
Where there are no instructions, the manifold shall be designed and constructed in accordance with engineering methods.

12.11.3.2.2
As an alternative method, the effective area of the manifold shall be in accordance with the following:

Important Notice: This document is the copyright property of the National Fire Protection Association (NFPA), Copyright © 2025 NFPA, and may not be used for any other purpose or distributed to any other persons or parties.

(1) The effective area shall be equal to the combined area of the flue collars or draft hood outlets.
(2) The vent connectors shall have a minimum 1 ft (0.3 m) rise.

12.11.3. 5
Where two or more appliances are connected to a common vent or chimney, each vent connector shall be sized in accordance with Chapter 13 or engineering methods.

12.11.3. 6
As an alternative method applicable only where all of the appliances are draft hood–equipped, each vent connector shall have an effective area not less than the area of the draft hood outlet of the appliance to which it is connected.

12.11.3. 7
Where two or more appliances are vented through a common vent connector or vent manifold, the common vent connector or vent manifold shall be located at the highest level consistent with available headroom and clearance to combustible material and sized in accordance with Chapter 13 or engineering methods.

12.11.3. 8
As an alternative method applicable only where there are two draft hood–equipped appliances, the effective area of the common vent connector or vent manifold and all junction fittings shall be not less than the area of the larger vent connector plus 50 percent of the area of the smaller flue collar outlet.

12.11.3. 9
Where the size of a vent connector is increased to overcome installation limitations and obtain connector capacity equal to the appliance input, the size increase shall be made at the appliance draft hood outlet.

12.11.5 Clearance.

12.11.5.1
Minimum clearances from vent connectors to combustible material shall be in accordance with Table 12.8.4.5, except as provided in 12.11.5.2.

12.11.5.2
The clearance between a vent connector and combustible material shall be permitted to be reduced where the combustible material is protected as specified for vent connectors in Table 10.2.4.

12.11.8 Slope.

12.11.8.1
Vent connectors shall be installed without any dips or sags.

12.11.8.2
Vent connectors, other than those attached to a mechanical draft system installed in accordance with appliance and the draft system manufacturers' instructions, shall slope upward toward the vent or chimney at least 1/4 in./ft (20 mm/m), except for vent connectors attached to a mechanical draft system installed in accordance with appliance and the draft system manufacturers' instructions.

12.11.9.2
The maximum horizontal length of a Type B double-wall connector shall be 100 percent of the height of the chimney or vent, except for engineered systems.

12.11.9.3
The maximum length of an individual connector for a chimney or vent system serving multiple appliances, from the appliance outlet to the junction with the common vent or another connector, shall be 100 percent of the height of the chimney or vent.

12.11.11.2
Where a thimble or slip joint is used to facilitate removal of the connector, the connector shall be firmly attached to, or inserted into, the thimble or slip joint to prevent the connector from falling out.

12.11.14.1

Important Notice: This document is the copyright property of the National Fire Protection Association (NFPA), Copyright © 2025 NFPA, and may not be used for any other purpose or distributed to any other persons or parties.

Single-wall metal pipe connectors shall not pass through any wall, floor, or ceiling except as permitted by 12.8.4.2 and 12.8.4.9.

12.13.1 Appliances Requiring Draft Hoods.

12.13.1.1
Vented appliances shall be installed with draft hoods, except as provided in 12.13.1.2.

12.13.1.2
The following vented appliances shall be permitted to be installed without draft hoods:

(1) Dual oven-type combination ranges
(2) Direct-vent appliances
(3) Fan-assisted combustion system appliances
(4) Appliances requiring chimney draft for operation
(5) Single-firebox boilers equipped with conversion burners with inputs greater than 400,000 Btu/hr (117 kW)
(6) Appliances equipped with blast, power, or pressure burners that are not listed for use with draft hoods
(7) Appliances designed for forced venting

12.13.2.1
If a draft hood is not supplied by the appliance manufacturer where one is required, a draft hood shall be installed in accordance with the following:

(1) It shall be listed or approved
(2) In the absence of other instructions, it shall be the same size as the appliance flue collar

12.13.2.2
Where a draft hood is required with a conversion burner, it shall be listed or approved type.

12.13.3 Draft Control Devices.

12.13.3.1
Where a draft control device is part of the appliance or is supplied by the appliance manufacturer, it shall be installed in accordance with the manufacturer's instructions.

12.13.3.2
In the absence of manufacturer's instructions, the device shall be attached to the flue collar of the appliance or as near to the appliance as practical.

12.13.6 Positioning.

12.13.6.1
Draft hoods and draft regulators shall be installed in the position for which they were designed with reference to the horizontal and vertical planes.

12.13.6.2
Draft hoods and draft regulators shall be located so that the relief opening is not obstructed by any part of the appliance or adjacent construction.

12.13.6.3
The appliance and its draft hood shall be located so that the relief opening is accessible for checking vent operation.

Important Notice: This document is the copyright property of the National Fire Protection Association (NFPA), Copyright © 2025 NFPA, and may not be used for any other purpose or distributed to any other persons or parties.

12.13.7 Clearance.

12.13.7.1
A draft hood shall be located so that its relief opening is not less than 6 in. (150 mm) from any surface except that of the appliance it serves and the venting system to which the draft hood is connected.

12.13.7.2
Where a greater or lesser clearance is indicated on the appliance label, the clearance shall not be less than that specified on the label.

12.13.7.3
The clearances in 12.13.7 shall not be reduced.

12.14.1
A manually operated damper shall not be placed in any appliance vent connector.

12.14.2
Fixed baffles and balancing baffles shall not be classified as manually operated dampers.

12.14.3*
Balancing baffles shall be mechanically locked in the desired position before placing the appliance in service.

12.14. 4
Balancing baffles shall be listed in accordance with UL 378, *Draft Equipment*.

12.16 Obstructions.

12.16.1
Devices that retard the flow of vent gases shall not be installed in a vent connector, chimney, or vent.

12.16.2
The following shall not be considered as obstructions:

(1) Draft regulators and safety controls specifically listed for installation in venting systems and installed in accordance with the manufacturer's installation instructions

(2) Approved draft regulators and safety controls designed and installed in accordance with engineering methods

(3) Listed heat reclaimers and automatically operated vent dampers installed in accordance with the manufacturers' installation instructions

(4) Vent dampers serving listed appliances installed in accordance with 13.1.1 or 13.2.1 or engineering methods

(5) Approved economizers, heat reclaimers, and recuperators installed in venting systems of appliances not required to be equipped with draft hoods if the following applies:
(a) The appliance manufacturer's instructions cover the installation of such a device in the venting system
(b) Performance in accordance with Section 12.1 and 12.4.1 is obtained

Second Revision No. 29-NFPA 54-2025 [Global Input]

See attached Word Document for changes to chapter ~~13 from~~ 13 on the Manual of Style~~- Task Group~~ /

Supplemental Information

File Name	Description	Approved
54-2024_editorial_review_Chapter_13_SD_For_Revision.docx	Prod: See attached Word document on changes for chapter 13. The sections will most likely need some form of renumbering. Additionally sections that are not being revised are not shown	
54_Global_SR-29_editorial_review_Chapter_13_SD_For_Revision.docx	For prod use	
54_Global_SR-29_editorial_review_Chapter_13_SD_For_Revision_for_ballot.docx	For ballot	

Submitter Information Verification

Committee: NFG-AAA
Submittal Date: Fri Oct 10 11:03:43 EDT 2025

Committee Statement

Committee Statement: The changes are to align chapter 13 to the NFPA Manual of Style.
Response Message: SR-29-NFPA 54-2025

Public Comment No. 45-NFPA 54-2025 [Global Input]

Important Notice: This document is the copyright property of the National Fire Protection Association (NFPA), Copyright © 2025 NFPA, and may not be used for any other purpose or distributed to any other persons or parties.

Chapter 13 Sizing of Category I Venting Systems

13.1 Additional Requirements to Single Appliance Vent.

This section shall apply where Table 13.1(a) through Table 13.1(f) are used to size single appliance venting systems.

13.1.1 Obstructions and Vent Dampers.

13.1.1.1
Table 13.1(a) through Table 13.1(f) shall not be used where obstructions are installed in the venting system.

13.1.1.2
The installation of vents serving listed appliances with vent dampers shall either comply the appliance manufacturer's instructions or comply with the following:

(1) The maximum capacity of the vent system shall be determined using the "NAT Max" column.

(2) The minimum capacity shall be determined as though the appliance were a fan-assisted appliance, using the "FAN Min" column to determine the minimum capacity of the vent system.

(3) Where the corresponding "Fan Min" is "NA," both of the following shall apply:

a) The vent configuration shall not be permitted.
b) An alternative venting configuration shall be utilized.

13.1.2 Vent Downsizing.

13.1.2.1
Where the vent size determined using Table 13.1(a) through Table 13.1(f)is smaller than the appliance draft hood outlet or flue collar, the use of the smaller size shall be permittedif the installation complies with all of the following:

(1) The total vent height (*H*) is at least 10 ft (3 m).

(2) Vents for appliance draft hood outlets or flue collars 12 in. (300 mm) in diameter or smaller are not reduced more than one table size.

(3) Vents for appliance draft hood outlets or flue collars larger than 12 in. (300 mm) in diameter are not reduced more than two table sizes.

(4) The maximum capacity listed in the tables for a fan-assisted appliance is reduced by 10 percent (0.90 × maximum table capacity).

(5) The draft hood outlet is greater than 4 in. (100 mm) in diameter. *(See 13.1.2.3.)*

13.1.2.2
A 3 in. (80 mm) diameter vent shall not be connected to a 4 in. (100 mm) diameter draft hood outlet.

13.1.2.3
The provision in 13.1.2.1(5) shall not apply to fan-assisted appliances.

13.1.3 Elbows.

13.1.3.1*
Single-appliance venting configurations with zero lateral lengths in Table 13.1(a), Table 13.1(b), and Table 13.1(e) shall not have elbows in the venting system.

A.13.1.3.1

Important Notice: This document is the copyright property of the National Fire Protection Association (NFPA), Copyright © 2025 NFPA, and may not be used for any other purpose or distributed to any other persons or parties.

Single-appliance venting with lateral lengths include two 90-degree elbows.

13.1.3.2
For each additional elbow up to and including 45 degrees, the maximum capacity listed in Table 13.1(a) through Table 13.1(f)s shall be reduced by 5 percent.

13.1.3.3
For each additional elbow greater than 45 degrees up to and including 90 degrees, the maximum capacity listed in Table 13.1(a) through Table 13.1(f)shall be reduced by 10 percent.

13.1.3.4
Where multiple offsets occur in a vent, the total lateral length of all offsets combined shall not exceed that specified in Table 13.1(a) through Table 13.1(e).

13.1.4 Zero Lateral.

Zero lateral (L) shall apply only to a straight vertical vent attached to a top outlet draft hood or flue collar.

13.1.5.1

Sea level input ratings shall be used when determining maximum capacity for high-altitude installation.

13.1.5.2
Actual input (derated for altitude) shall be used for determining minimum capacity for high-altitude installation.

13.1.6 Two-Stage/Modulating Appliances.

For appliances with more than one input rate, both of the following shall apply:

(1) The minimum vent capacity (FAN Min) determined using Table 13.1(a) through Table 13.1(f)shall be less than the lowest appliance input rating.
(2) The maximum vent capacity (FAN Max/NAT Max) determined using Table 13.1(a) through Table 13.1(f)shall be greater than the highest appliance input rating.

13.1.7* Corrugated Chimney Liners.

13.1.7.1*
Listed corrugated metallic chimney liner systems in masonry chimneys shall be sized using Table 13.1(a) or Table 13.1(b) for Type B vents, with the maximum capacity reduced by 20 percent (0.80 × maximum capacity) and the minimum capacity as shown in Table 13.1(a) or Table 13.1(b).

A.13.1.7.1
The 20 percent reduction for corrugated metallic chimney liner systems includes an allowance for one long radius 90-degree turn at the bottom of the liner.

13.1.7.2
Corrugated metallic liner systems installed with bends or offsets shall have their maximum capacity further reduced in accordance with 13.1.3.

13.1.9 Vertical Vent Upsizing/7 × Rule.

13.1.9.1
Where the vertical vent has a larger diameter than the vent connector, both of the following shall apply:

(1) The vertical vent diameter shall be used to determine the minimum vent capacity.
(2) The connector diameter shall be used to determine the maximum vent capacity.

Important Notice: This document is the copyright property of the National Fire Protection Association (NFPA), Copyright © 2025 NFPA, and may not be used for any other purpose or distributed to any other persons or parties.

13.1.9.2
The flow area of the vertical vent shall not exceed seven times the flow area of the listed appliance categorized vent area, flue collar area, or draft hood outlet area unless designed in accordance with engineering methods.

13.1.11 Chimneys and Vent Locations.

1.

13.1.11.1
Table 13.1(a) through Table 13.1(e) shall be used only for chimneys and vents not exposed to the outdoors below the roof line.

13.1.11.2
A Type B vent or listed chimney lining system passing through an unused masonry chimney flue shall not be considered exposed to the outdoors.

13.1.11.3
Where vents extend outdoors above the roof more than 5 ft (1.5 m) higher than required by Table 12.7.3, and where vents terminate in accordance with 12.7.3(1)(b), one of the following shall apply:

(1) The outdoor portion of the vent shall be enclosed as required by thissubsection for vents not considered exposed to the outdoors.
(2) The venting system shall be engineered.

13.1.1.4
A Type B vent passing through an unventilated enclosure or chase insulated to a value of not less than R8 shall not be considered exposed to the outdoors.

13.1.11.5
Table 13.1(c), in combination with Table 13.1(f), shall be used for clay-tile-lined exterior masonry chimneys if all of the following are met:

(1) The vent connector is Type B double wall.

(2) The vent connector length is limited to 18 in./in. (18 mm/mm) of vent connector diameter.

(3) The appliance is equipped with a draft hood.

(4) The input rating is less than the maximum capacity given in Table 13.1(c).

(5) For a water heater, the outdoor design temperature is not less than 5°F (−15°C).

(6) For a space-heating appliance, the input rating is greater than the minimum capacity given by Table 13.1(f).

13.1.17 Sizing Vents Not Covered by Tables.

Where a vent height is lower than 6 ft (1.8 m) or higher than shown in Table 13.1(a) through Table 13.1(f), an engineering method shall be used to calculate the vent capacity.

13.2 Additional Requirements to Multiple-Appliance Vent.

This section shall apply where Table 13.2(a) through Table 13.2(i) are used to size multiple appliance venting systems.

13.2.1 Obstructions and Vent Dampers.

13.2.1.1
Table 13.2(a) through Table 13.2(i) shall not be used where obstructions are installed in the venting system.

13.2.1.2

Important Notice: This document is the copyright property of the National Fire Protection Association (NFPA), Copyright © 2025 NFPA, and may not be used for any other purpose or distributed to any other persons or parties.

The installation of vents serving listed appliances with vent dampers shall either comply with the appliance manufacturer's instructions, or comply with the following:

(1) The maximum capacity of the vent connector shall be determined using the NAT Max column of Table 13.2(a) through Table 13.2(i).

(2) The maximum capacity of the vertical vent or chimney shall be determined using the FAN+NAT column of Table 13.2(a) through Table 13.2(i) when the second appliance is a fan-assisted appliance, or the NAT+NAT column of Table 13.2(a) through Table 13.2(i) when the second appliance is equipped with a draft hood.

(3) The minimum capacity shall be determined as if the appliance were a fan-assisted appliance, as follows:

(a) The minimum capacity of the vent connector shall be determined using the FAN Min column of Table 13.2(a) through Table 13.2(i).

(b) The FAN+FAN column of Table 13.2(a) through Table 13.2(i) shall be used when the second appliance is a fan-assisted appliance.

(c) The FAN+NAT column of Table 13.2(a) through Table 13.2(i) shall be used when the second appliance is equipped with a draft hood, to determine whether the vertical vent or chimney configuration is not applicable (NA).

(d) Where the vent configuration is NA, both of the following shall apply:

i. The vent configuration shall not be permitted.
ii. An alternative venting configuration shall be utilized.

13.2.3 Vent Connector Exceeding Maximum Length.

13.2.3.1
The vent connector shall be routed to the vent utilizing the shortest possible route.

13.2.3.2
Connectors with longer horizontal lengths than those listed in Table 13.2.2 shall be permitted under the following conditions:

(1) *The maximum capacity (FAN Max or NAT Max) of the vent connector shall be reduced 10 percent for each additional multiple of the length listed in Table 13.2.2.

(2) For a connector serving a fan-assisted appliance, the minimum capacity (FAN Min) of the connector shall be determined by referring to the applicable table in Table 13.1(a) through Table 13.1(f).

(3) For Type B double-wall connectors, Table 13.1(a) shall be used.

(4) For single-wall connectors, Table 13.1(b) shall be used.

(5) The height (*H*) and lateral (*L*) shall be measured according to the procedures for a single appliance vent, as if the other appliances were not present.

A.13.2.3.2(1)
For example, the maximum length listed for a 4 in. (100 mm) connector is 6 ft (1.8 m). With a connector length greater than 6 ft (1.8 m) but not exceeding 12 ft (3.7 m), the maximum capacity would be reduced by 10 percent (0.90 × maximum vent connector capacity). With a connector length greater than 12 ft (3.7 m) but not exceeding 18 ft (5.5 m), the maximum capacity would be reduced by 20 percent (0.80 × maximum vent capacity).

13.2.4 Vent Connector Manifolds.

13.2.4.1
Where the vent connectors are combined prior to entering the vertical portion of the common vent to form a common vent manifold, the size of the common vent manifold and the common vent shall be

Important Notice: This document is the copyright property of the National Fire Protection Association (NFPA), Copyright © 2025 NFPA, and may not be used for any other purpose or distributed to any other persons or parties.

determined by applying a 10 percent reduction (0.90 × maximum common vent capacity) to the common vent capacity part of the common vent tables.

13.2.4.2
The length of the common vent manifold (*LM*) shall not exceed 18 in./in. (18 mm/mm) of common vent diameter (*D*).

13.2.5 Vent Offsets.

13.2.5.1
Where the common vertical vent is offset, both of the following shall apply:

(1) The maximum capacity of the common vent shall be reduced in accordance with 13.2.6.
(2) The horizontal length of the common vent offset shall not exceed 18 in./in. (18 mm/mm) of common vent diameter (*D*).

13.2.5.2
Where multiple offsets occur in a common vent, the total horizontal length of all offsets combined shall not exceed 18 in./in. (18 mm/mm) of the common vent diameter.

13.2.6 Elbows in Vents.

13.2.6.1
For each elbow up to and including 45 degrees in the common vent, the maximum common vent capacity listed in Table 13.2(a) through Table 13.2(i) shall be reduced by 5 percent.

13.2.6.2
For each elbow greater than 45 degrees up to and including 90 degrees, the maximum common vent capacity listed in Table 13.2(a) through Table 13.2(i) shall be reduced by 10 percent.

13.2.7 Elbows in Connectors.

13.2.7.1
The vent connector capacities listed in the common vent sizing tables include allowance for two 90-degree elbows and for each additional elbow up to and including 45 degrees, the maximum vent connector capacity listed in Table 13.2(a) through Table 13.2(j)shall be reduced by 5 percent.

13.2.7.2
For each elbow greater than 45 degrees up to and including 90 degrees, the maximum vent connector capacity listed in Table 13.2(a) through Table 13.2(i)shall be reduced by 10 percent.

13.2.10 Tee and Wye Sizing.

13.2.10.1
At the point where tee or wye fittings connect to a common gas vent, the opening size of the fitting shall be equal to the size of the common vent.

13.2.10.2
Tee and wye fittings shall not be prohibited from having reduced-size openings at the point of connection to appliance gas vent connectors.

13.2.11 High-Altitude Installations.

13.2.11.1
Sea level input ratings shall be used when determining maximum capacity for high-altitude installation.

13.2.11.2
Actual input (derated for altitude) shall be used for determining minimum capacity for high-altitude installation.

13.2.17 Multistory Vent Offsets and Capacity.

13.2.17.1

Important Notice: This document is the copyright property of the National Fire Protection Association (NFPA), Copyright © 2025 NFPA, and may not be used for any other purpose or distributed to any other persons or parties.

Offsets in multistory common vent systems shall be limited to a single offset in each system.

13.2.17.2
Systems with an offset shall comply with all of the following:

(1) The offset angle shall not exceed 45 degrees from vertical.

(2) The horizontal length of the offset shall not exceed 18 in./in. (18 mm/mm) of common vent diameter of the segment in which the offset is located.

(3) For the segment of the common vertical vent containing the offset, the common vent capacity listed in the common venting tables shall be reduced by 20 percent (0.80 × maximum common vent capacity).

(4) A multistory common vent shall not be reduced in size above the offset.

13.2.19.1

The minimum vent connector capacity (FAN Min) of appliances with more than one input rate shall be determined using Table 13.2(a) through Table 13.2(i).

13.2.19.2
The minimum vent connector capacity (FAN Min) of appliances shall be less than the lowest appliance input rating.

13.2.19. 3

The maximum vent connector capacity (FAN Max or NAT Max) shall be both of the following:

(1) Determined using Table 13.2(a) through Table 13.2(i)
(2) Greater than the highest appliance input rating

13.2.20* Corrugated Chimney Liners.

13.2.20.1*
Listed corrugated metallic chimney liner systems in masonry chimneys shall be sized by using Table 13.2(a) or Table 13.2(b) for Type B vents, with the maximum capacity reduced by 20 percent (0.80 × maximum capacity) and the minimum capacity as shown in Table 13.2(a) or Table 13.2(b).

A.13.2.20.1
The 20 percent reduction for corrugated metallic chimney liner systems includes an allowance for one long radius 90-degree turn at the bottom of the liner.

13.2.20.2
Corrugated metallic liner systems installed with bends or offsets shall have their maximum capacity further reduced in accordance with 13.2.5 and 13.2.6.

13.2.21 Connections to Chimney Liners.

13.2.21.1
Where double-wall connectors are required, tee and wye fittings used to connect to the common vent chimney liner shall be listed double-wall fittings.

13.2.21.2
Connections between chimney liners and listed double-wall fittings shall be made with listed adapter fittings designed for such purpose.

13.2.22 Chimneys and Vent Locations.

13.2.22.1
Table 13.2(a) through Table 13.2(e) shall be used only for chimneys and vents not exposed to the outdoors below the roof line.

13.2.22.2

Important Notice: This document is the copyright property of the National Fire Protection Association (NFPA), Copyright © 2025 NFPA, and may not be used for any other purpose or distributed to any other persons or parties.

A Type B vent or listed chimney lining system passing through an unused masonry chimney flue shall not be considered exposed to the outdoors.

13.2.22.3
A Type B vent passing through an unventilated enclosure or chase insulated to a value of not less than R8 shall not be considered exposed to the outdoors.

13.2.22.4
Where vents extend outdoors above the roof more than 5 ft (1.5 m) higher than required by Table 12.7.3, and where vents terminate in accordance with 12.7.3(1)(b), one of the following shall apply:

(1) The outdoor portion of the vent shall be enclosed as required by thissubsection for vents not considered exposed to the outdoors.
(2) The venting system shall be engineered.

13.2.22.5
Table 13.2(f), Table 13.2(g), Table 13.2(h), and Table 13.2(i) shall be used for clay-tile-lined exterior masonry chimneys, provided all the following conditions are met:

(1) The vent connector is Type B double wall.

(2) At least one appliance is equipped with a draft hood.

(3) The combined appliance input rating is less than the maximum capacity given by Table 13.2(f) (for NAT+NAT) or Table 13.2(h) (for FAN+NAT).

(4) The input rating of each space-heating appliance is greater than the minimum input rating given by Table 13.2(g) (for NAT+NAT) or Table 13.2(i) (for FAN+NAT).

(5) The vent connector sizing complies with Table 13.2(c).

13.2.23 Draft Hood Conversion Accessories.

Draft hood conversion accessories for use with masonry chimney venting listed Category I fan-assisted appliances shall be listed and installed in accordance with the listed accessory manufacturer's installation instructions.

13.2.24 Vent Connector Sizing.

13.2.24.1
Vent connectors shall not be increased more than two sizes greater than the listed appliance categorized vent diameter, flue collar diameter, or draft hood outlet diameter.

13.2.24.2
Vent connectors for draft hood–equipped appliances shall not be smaller than the draft hood outlet diameter.

12.2.24.3
Where a vent connector size(s) determined from Table 13.2(a) through Table 13.2(i)for a fan-assisted appliance(s) is smaller than the flue collar diameter, the use of the smaller size(s) shall be permitted, provided that the installation complies with all of the following conditions:

(1) The vent connector(s) for a fan-assisted appliance flue collar(s) 12 in. (300 mm) in diameter or smaller is not reduced by more than one table size, and a connector(s) larger than 12 in. (300 mm) in diameter is not reduced more than two table.

(2) The fan-assisted appliance(s) is common vented with a draft hood–equipped appliance(s).

(3) The vent connector(s) has a smooth interior wall.

A.13.2.24.3(1)

Important Notice: This document is the copyright property of the National Fire Protection Association (NFPA), Copyright © 2025 NFPA, and may not be used for any other purpose or distributed to any other persons or parties.

An example of a one-size reduction is 12 in. to 10 in. (300 mm to 250 mm). An example of a two-size reduction is 24 in. to 20 in. (610 mm to 510 mm).

13.2.25 Multiple Vent and Connector Sizes.

13.2.25.1
All combinations of pipe sizes, single-wall metal pipe, and double-wall metal pipe shall be allowed within any connector run(s) or within the common vent, if all of the applicable tables in Table 13.2(a) through Table 13.2(j) permit all of the desired sizes and types of pipe as if they were used for the entire length of the subject connector or vent.

13.2.25.2
Where single-wall and Type B double-wall metal pipes are used for vent connectors within the same venting system, the common vent shall be sized using Table 13.2(b) or Table 13.2(d) as applicable.

13.2.27 Interpolation.

Interpolation shall be permitted in calculating capacities for vent dimensions that fall between entries in Table 13.2(a) through Table 13.2(i).

13.2.28 Extrapolation.

Extrapolation beyond the entries in Table 13.2(a) through Table 13.2(i) shall not be permitted.

13.2.29 Sizing Vents Not Covered by Tables.

For vent heights lower than 6 ft (1.8 m) and higher than shown in Table 13.2(a) through Table 13.2(i), engineering methods shall be used to calculate vent capacities.

13.2.30 Height Entries.

Where the actual height of a vent falls between entries in the height column of the applicable table in Table 13.2(a) through Table 13.2(i), either of the following shall be used:

(1) Interpolation

(2) The lower appliance input rating shown in entries in Table 13.2(a) through Table 13.2(i), for FAN Max and NAT Max column values; and the higher appliance input rating for the FAN Min column values

Second Revision No. 30-NFPA 54-2025 [Detail]

Change 3/4 psi to 1/2 psi in note (1) of Table 6.2.1(o)

Submitter Information Verification

Committee: NFG-AAA
Submittal Date: Tue Oct 21 08:40:11 EDT 2025

Committee Statement

Committee Statement: The change is to correlate the regulator pressure drop with its corresponding propane table (6.3.1(i)) regulator pressure drop as the operating conditions are the same in terms of sizing.

Response Message: SR-30-NFPA 54-2025

Public Comment No. 7-NFPA 54-2025 [Global Input]

Second Revision No. 31-NFPA 54-2025 [Detail]

Change 1/2 psi to 1 psi in note (1) of Table 6.3.1(j).

Submitter Information Verification

Committee: NFG-AAA
Submittal Date: Tue Oct 21 08:44:50 EDT 2025

Committee Statement

Committee Statement: The change is to correlate the regulator pressure drop with its corresponding natural gas table (6.2.1(p)) regulator pressure drop as the operating conditions are the same in terms of sizing.

Response Message: SR-31-NFPA 54-2025

Public Comment No. 6-NFPA 54-2025 [Global Input]

Second Revision No. 32-NFPA 54-2025 [Detail]

5.5.8 Plastic Piping Joints and Fittings.

[Sections below are moving to new 7.6.4 titled Installation of Plastic Piping and Tubing Joints and Fittings]

Plastic pipe, tubing, and fittings shall be joined in accordance with the manufacturers' instructions.

[Move to under 5.5.8] The joint shall be designed and installed so that the longitudinal pullout resistance of the joint will be at least equal to the tensile strength of the plastic piping material.

[Move to 7.6.4.2] Heat fusion joints shall be made in accordance with qualified procedures that have been established and proven by test to produce gastight joints at least as strong as the pipe or tubing being joined.[Move to 7.6.4.3] Heat fusion joints shall be made with the joining method recommended by the pipe manufacturer.[Move to 5.5.8.1] Polyethylene heat fusion fittings shall be marked "ASTM D2513." [Move to 5.5.8.2] Polyamide heat fusion fittings shall be marked "ASTM F2945."

[Move to 7.6.4.4]Where compression-type mechanical joints are used, the gasket material in the fitting shall be compatible with the plastic piping and with the gas distributed by the system. [Move to 7.6.4.5] Where compression-type stiffeners are used, an internal tubular rigid stiffener shall be used in conjunction with the fitting as follows.

(1) The stiffener shall be flush with the end of the pipe or tubing and extend at least to the outside end of the compression fitting when installed.

(2) The stiffener shall be free of rough or sharp edges and not be a force fit in the plastic.

(3) Split tubular stiffeners shall not be used.

[Move to 7.6.4.6] Plastic piping joints and fittings for use in LP-Gas piping systems shall be in accordance with NFPA 58.

Supplemental Information

File Name	Description	Approved
5.5.8_Move_SR.docx	Prod: See Word Document for moving and markup	
54_Detail_SR-32_5.5.8_moves_current.docx	For prod use only	
54_Detail_SR-32_5.5.8_moves_map.docx	For prod use	

Submitter Information Verification

Committee: NFG-AAA
Submittal Date: Tue Oct 21 08:48:52 EDT 2025

Committee Statement

Committee Statement: Not all the requirements in current 5.5.8 are design requirements and the pieces that are installation related are moving to chapter 7 on installation.

Response Message: SR-32-NFPA 54-2025

Public Comment No. 5-NFPA 54-2025 [New Section after 7.5.2]

Public Comment No. 2-NFPA 54-2025 [New Section after 7.6.1]

Public Comment No. 4-NFPA 54-2025 [Section No. 5.5.8]

Second Revision No. 6-NFPA 54-2025 [Detail]

A.4.6

The distribution of hydrogen admixtures in natural gas in building systems does not change the safety or operability of fuel gas systems where reasonable limits on hydrogen percentages (by volume), such as 20 percent, are used. Pipe system components and sizing methods currently in the code can be used to size hydrogen admixtures up to 20 percent hydrogen by volume with the different natural gas sources already used in developing the sizing methods and based upon current technical justification of admixture compatibility.

Adding hydrogen to a fuel gas affects appliance function, specifically combustion behavior. The primary safety concern of increasing hydrogen percentages is burner "flashback," where burner flame front retreats into the burner itself (regression), leading to burner failure, failure of the burner system, and potential release of unburned gas in the building. Regression of flame fronts into burners occurs when hydrogen concentrations are increased and gas mixture flame speeds increase proportionally, exceeding the flow rate of the mixed fuel gas/air mixture to the flame within the combustion chamber. Hydrogen's burning velocity is approximately six times faster than that of methane. A 20 percent maximum threshold for hydrogen admixtures with natural gas represents a reasonable limit to minimize the potential of flashback behavior and associated safety risks of burner failure. This admixture maximum threshold is consistent with compatibility of piping system limit of 20 percent hydrogen.

Appliances that are certified for use with natural gas enriched with more than 5 percent hydrogen should include an indication of the permissible fuel type.

Submitter Information Verification

Committee: NFG-AAA

Submittal Date: Tue Oct 07 10:56:26 EDT 2025

Committee Statement

Committee Statement: Nationally recognized testing labs such as UL offer certification of new appliances for use with concentrations of hydrogen over 5% and have some form of labeling to indicate this.

Response Message: SR-6-NFPA 54-2025

Second Revision No. 17-NFPA 54-2025 [Section No. 1.1.1.2]

1.1.1.2

This code shall not apply to the following items:

(1) Portable LP-Gas appliances and equipment of all types that are not connected to a fixed fuel piping system

(2) Installation of appliances such as brooders, dehydrators, dryers, and irrigation equipment used for agricultural purposes

(3) Raw material (feedstock) applications except for piping to special atmosphere generators

(4) Oxygen- fuel- gas cutting and welding systems

(5) Industrial gas applications under the scope of NFPA 51 or NFPA 55

(6) Petroleum refineries, pipeline compressor or pumping stations, loading terminals, compounding plants, refinery tank farms, and natural gas processing plants

(7) Large integrated chemical plants or portions of such plants where flammable or combustible liquids or gases are produced by ~~chemical reactions~~ or used in chemical reactions

(8) LP-Gas installations at utility gas plants

(9)* Liquefied natural gas (LNG) systems

(10) Fuel gas piping in electric utility power plants

(11) LP-Gas equipment for vaporization, gas mixing, and gas manufacturing

(12) LP-Gas piping for buildings under construction or renovations that is not to become part of the permanent building piping system — that is, temporary fixed piping for building heat

(13) Installation of LP-Gas systems for railroad switch heating

(14) Installation of LP-Gas and compressed natural gas (CNG) systems on vehicles

(15) Gas piping, meters, gas pressure regulators, and other appurtenances used by the gas supplier in distribution of gas, other than undiluted LP-Gas

(16) Fuel gas systems on recreational vehicles manufactured in accordance with NFPA 1192

(17) Fuel gas systems under the scope of NFPA 2

(18) Construction of appliances

(19) Selection, design, application, installation, location, performance, operation, inspection, testing, and maintenance of fuel gas detection and warning equipment in buildings and structures

A.1.1.1.2(19)

NFPA 715 is the standard for fuel gas detection and warning equipment in buildings and structures. Requiring the installation of fuel gas detection is outside the scope of this code and is under the scope of the relevant building, fire, and life safety codes. The enforcement of fuel gas detection requirements is more applicable to the enforcers of those codes than the enforcers of the fuel gas code. Fuel gas detection installation is similar to smoke or carbon monoxide detection installation.

Submitter Information Verification

Committee: NFG-AAA

Submittal Date: Wed Oct 08 15:31:03 EDT 2025

Committee Statement

Committee Statement: NFPA 715 is the standard for fuel gas detection and warning equipment in buildings and structures. Requiring the installation of fuel gas detection is outside the scope of this Code and is under the scope of the relevant building, fire, and life safety codes. The enforcement of fuel gas detection requirements is more applicable to the enforcers of those codes rather than the enforcers of the fuel gas code. Fuel gas detection installation is similar to smoke or carbon monoxide detection installation.

The technical committee is aware of the efforts of the Building and Life Safety Code Committees (NFPA 101 and NFPA 5000) and is supportive of their efforts to develop requirements related to fuel gas detection per occupancy type.

The intent of exempting the scope of NFPA 715 from NFPA 54 is to acknowledge the request for fuel gas detection requirements and provide further explanation on the topic.

Response Message: SR-17-NFPA 54-2025

Public Comment No. 47-NFPA 54-2025 [Global Input]

Second Revision No. 15-NFPA 54-2025 [Section No. 1.4]

1.4 Equivalency.

Nothing in this code shall prevent the use of systems, methods, or devices of equivalent or superior quality, strength, fire resistance, effectiveness, durability, and safety over those prescribed by this code.

~~**1.4.1**~~

~~The provisions of this code shall not be intended to prevent the use of any material, appliance, equipment, method of construction, or installation procedure, provided that any such alternative is in accordance with the following:~~

~~It is equivalent or superior to that prescribed in this code in terms of quality, strength, fire resistance, durability, and safety as applicable~~

~~It meets the intent of this code~~

~~It is approved for the intended purpose by the AHJ~~

1.4.1

Technical documentation ~~satisfactory to the AHJ~~ shall be submitted to the authority having jurisdiction to demonstrate equivalency.

1.4.2

The system, method, or device shall be approved for the intended purpose by the authority having jurisdiction.

Supplemental Information

File Name	Description	Approved
54_SR-15_1.4.docx		

Submitter Information Verification

Committee: NFG-AAA

Submittal Date: Wed Oct 08 13:12:28 EDT 2025

Committee Statement

Committee Statement: The text of the boilerplate is moving back towards the language recommended in the Manual of Style in order to maintain consistency between the language found in other NFPA Codes and Standards.

Response Message: SR-15-NFPA 54-2025

Public Comment No. 54-NFPA 54-2025 [Section No. 1.4.1]

Public Comment No. 52-NFPA 54-2025 [Section No. 1.4.1]

Public Comment No. 53-NFPA 54-2025 [Section No. 1.4.2]

Public Comment No. 55-NFPA 54-2025 [Section No. 1.4.2]

Second Revision No. 1-NFPA 54-2025 [Section No. 2.3]

2.3 Other Publications.

2.3.1 ASME Publications.

American Society of Mechanical Engineers, Two Park Avenue, New York, NY 10016-5990~~, (800) 843-2763~~ . www.asme.org

ANSI/ASME B1.20.1, *Pipe Threads, General Purpose, Inch*, 2013, reaffirmed ~~(R~~ 2018~~)~~ .

ANSI/ASME B16.1, *Gray Iron Pipe Flanges and Flanged Fittings: Classes 25, 125, and 250,* 2020.

ANSI/ASME B16.5, *Pipe Flanges and Flanged Fittings: NPS ½ through NPS 24, Metric/Inch Standard*, ~~2020~~ 2025 .

ANSI/ASME B16.20, *Metallic Gaskets for Pipe Flanges~~: Ring-Joint, Spiral-Wound and Jacketed~~* , 2023.

ANSI/ASME B16.21, *Nonmetallic Flat Gaskets for Pipe Flanges*, 2021.

ANSI/ASME B16.24, *Cast Copper Alloy Pipe Flanges, ~~and~~ Flanged Fittings, and Valves : Classes 150, 300, 600, 900, 1500, and 2500*, 2021.

ANSI/ASME B16.33, *Manually Operated Metallic Gas Valves for Use in Gas Piping Systems up to 175 psi (Sizes NPS 1/2 through NPS 2)*, 2024.

ANSI/ASME B16.38, *Large Metallic Valves for Gas Distribution* , 2023.

ANSI/ASME B16.42, *Ductile Iron Pipe Flanges and Flanged Fittings: Classes 150 and 300*, 2021.

ANSI/ASME B16.44, *Manually Operated Metallic Gas Valves for Use in ~~Above Ground~~ Aboveground Piping Systems up to 5 psi*, 2023.

ANSI/ASME B16.47, *Large Diameter Steel Flanges: NPS 26 through NPS 60, Metric/Inch Standard*, ~~2020~~ 2025 .

ANSI/ASME B36.10M, *Welded and Seamless Wrought Steel Pipe,* 2018.

2.3.2 ASTM Publications.

ASTM International, 100 Barr Harbor Drive, P.O. Box C700, West Conshohocken, PA 19428-2959~~, (610) 832-9585~~ . www.astm.org

ASTM A53/A53M , *Standard Specification for Pipe, Steel, Black and Hot-Dipped, Zinc-Coated, Welded and Seamless,* 2024.

ASTM A106/A106M , *Standard Specification for Seamless Carbon Steel Pipe for High-Temperature Service,* 2019a.

ASTM A254/A254M , *Standard Specification for Copper-Brazed Steel Tubing,* 2012, reaffirmed 2019.

ASTM A268/A268M , *Standard Specification for Seamless and Welded Ferritic and Martensitic Stainless Steel Tubing for General Service*, 2024.

ASTM A269/A269M , *Standard Specification for Seamless and Welded Austenitic Stainless Steel Tubing for General Service*, 2024.

ASTM A312/A312M , *Standard Specification for Seamless, Welded, and Heavily Cold Worked Austenitic Stainless Steel Pipes*, ~~2024a~~ 2025 .

ASTM B88, *Standard Specification for Seamless Copper Water Tube,* 2022.

ASTM B210/B210M , *Standard Specification for Aluminum and Aluminum-Alloy Drawn Seamless Tubes,* 2019a.

ASTM B241/B241M , *Standard Specification for Aluminum and Aluminum-Alloy Seamless Pipe and Seamless Extruded Tube,* 2022.

ASTM B280, *Standard Specification for Seamless Copper Tube for Air Conditioning and Refrigeration Field Service,* 2023.

ASTM D2513, *Standard Specification for Polyethylene (PE) Gas Pressure Pipe, Tubing, and Fittings,*~~2020~~ 2025 .

ASTM E136, *Standard Test Method for* ~~*Behavior*~~ *Assessing Combustibility of Materials* ~~*in*~~ *Using a Vertical Tube Furnace at 750°C*, 2024c.

ASTM E2652, *Standard Test Method for* ~~*Behavior*~~ *Assessing Combustibility of Materials* ~~*in*~~ *Using a Tube Furnace with a Cone-shaped Airflow Stabilizer, at 750°C*, 2022.

ASTM F1924, *Standard Specification for Plastic Mechanical Fittings for Use on Outside Diameter Controlled Polyethylene Gas Distribution Pipe and Tubing* , 2025.

ASTM F1973, *Standard Specification for Factory Assembled Anodeless Risers and Transition Fittings in Polyethylene (PE) and Polyamide 11 (PA11) and Polyamide 12 (PA12) Fuel Gas Distribution Systems,*~~2021~~ 2025 .

ASTM F2509, *Standard Specification for Field-Assembled Anodeless Riser Kits for Use on Outside Diameter Controlled Polyethylene and Polyamide-11 (PA11) Gas Distribution Pipe and Tubing,* 2024.

ASTM F2945, *Standard Specification for Polyamide 11 Gas Pressure Pipe, Tubing, and Fittings,* 2018, reaffirmed 2023.

2.3.3 CSA Group Publications.

CSA Group, 178 Rexdale Boulevard, Toronto, ON M9W 1R3, Canada~~, (216) 524-4990~~ . www.csagroup.org

CSA/ANSI FC 1~~:21~~ /CSA 22.2 No ~~O~~ . 62282-3-100~~:21~~ , *Fuel Cell Technologies — Part 3-100: Stationary Fuel Cell Power Systems — Safety (Adopted IEC 62282-3-100:2019, second edition, 2019-0 2, with Canadian and U.S. deviations)*, 2021.

ANSI/CSA NGV 5.1, *Residential Fueling Appliances (RFA)* , 2023.

ANSI/CSA NGV 5.2, *Vehicle Fueling Appliances (VFA)*, ~~2017, reaffirmed 2021~~ 2023 .

CSA/ANSI LC 1/CSA 6.26, *Fuel Gas Piping Systems Using Corrugated Stainless Steel Tubing,*~~2019~~ 2023 .

CSA/ANSI LC 4/CSA 6.32, *Press-Connect Metallic Fittings for Use in Fuel Gas Distribution Systems,* 2022.

CSA/ANSI Z21.1/CSA 1.1, *Household Cooking Gas Appliances*, 2024.

ANSI Z21.5.1/CSA 7.1, *Gas Clothes Dryers, Volume I, Type 1 Clothes Dryers*, ~~2022~~ 2017, reaffirmed 2022 .

ANSI Z21.5.2/CSA 7.2, *Gas Clothes Dryers, Volume II, Type 2 Clothes Dryers*, 2016, reaffirmed 2021.

ANSI Z21.8, *Installation of Domestic Gas Conversion Burners,* 1994, reaffirmed 2017.

CSA/ANSI Z21.10.1/CSA 4.1, *Gas Water Heaters, Volume I, Storage Water Heaters with Input Ratings of 75,000 Btu per Hour or Less*, 2019, reaffirmed 2024 .

CSA/ANSI Z21.10.3/CSA 4.3, *Gas-Fired Water Heaters, Volume III, Storage Water Heaters with Input Ratings Above 75,000 Btu per Hour, Circulating and Instantaneous* , 2019.

CSA/ANSI Z21.11.2, *Gas-Fired Room Heaters, Volume II, Unvented Room Heaters,* 2019.

CSA/ANSI Z21.13/CSA 4.9, *Gas-Fired Low-Pressure Steam and Hot Water Boilers*, 2022.

ANSI Z21.15/CSA 9.1, *Manually* ~~*operated gas valves*~~ *Operated Gas Valves for* ~~*appliances*~~ *Appliances , ~~appliance connector valves~~ Appliance Connector Valves and ~~hose end valves~~ Hose-End Valves* , 2021.

CSA/ANSI Z21.18/CSA 6.3, *Gas Appliance Pressure Regulators*, 2019.

CSA/ANSI Z21.19/CSA 1.4, *Refrigerators Using Gas Fuel*, 2019, reaffirmed 2024 .

ANSI Z21.22/CSA 4.4, *Relief Valves for Hot Water Supply Systems*, 2015, reaffirmed 2020.

CSA/ANSI Z21.24/CSA 6.10, *Connectors for Gas Appliances,* 2022.

ANSI Z21.40.1/CSA 2.91, *Gas-Fired, Heat Activated Air Conditioning and Heat Pump Appliances*, 1996, reaffirmed 2022.

ANSI Z21.40.2/CSA 2.92, *Gas-Fired, Work Activated Air-Conditioning and Heat Pump Appliances (Internal Combustion)*, 1996, reaffirmed 2022.

ANSI Z21.41/CSA 6.9, *Quick-Disconnect Devices for Use with Gas Fuel Appliances,* 2023.

CSA/ANSI Z21.47/CSA 2.3, *Gas-Fired Central Furnaces*, 2021.

ANSI Z21.50/CSA 2.22, *Vented Decorative Gas Appliances*, 2019.

CSA/ANSI Z21.54/CSA 8.4, *Gas Hose Connectors for Portable Outdoor Gas-Fired Appliances,* 2019, reaffirmed 2024 .

CSA/ANSI Z21.56/CSA 4.7, *Gas-Fired Pool Heaters*, 2019.

ANSI Z21.58/CSA 1.6, *Outdoor Cooking Gas Appliances*, 2022.

ANSI Z21.60/CSA 2.26, *Decorative Gas Appliances for Installation in Solid-Fuel Burning Fireplaces*, 2017, reaffirmed 2021.

ANSI Z21.69/CSA 6.16, *Connectors for* ~~*Movable*~~ *Moveable Gas Appliances,* 2015, reaffirmed 2020.

ANSI Z21.75/CSA 6.27, *Connectors for Outdoor Gas Appliances and Manufactured Homes,* 2016, reaffirmed 2021.

ANSI Z21.80/CSA 6.22, *Line Pressure Regulators*, 2019, reaffirmed 2024 .

ANSI Z21.86/CSA 2.32, *Vented Gas-Fired Space Heating Appliances*, 2016, reaffirmed 2021.

CSA/ANSI Z21.88/CSA 2.33, *Vented Gas Fireplace Heaters*, 2019.

ANSI Z21.89/CSA 1.18, *Outdoor Cooking Specialty Gas Appliances*, 2023.

ANSI Z21.90/CSA 6.24, *Gas Convenience Outlets and Optional Enclosures,* 2019, reaffirmed 2024 .

ANSI Z21.93/CSA 6.30, *Excess Flow Valves for Natural Gas and* ~~*LP-Gas*~~ *Propane Gas with Pressures Up to 5 psig,* 2017, reaffirmed 2022.

ANSI Z21.97/CSA 2.41, *Outdoor Decorative Gas Appliances*, 2017.

ANSI Z83.4/CSA 3.7, *Non-Recirculating Direct Gas-Fired Heating and Forced Ventilation Appliances for Commercial and Industrial Application,* 2017, reaffirmed 2022.

ANSI Z83.8/CSA 2.6, *Gas Unit Heaters, Gas Packaged Heaters, Gas Utility Heaters, and Gas-Fired Duct Furnaces*, 2016, reaffirmed 2021.

ANSI Z83.11/CSA 1.8, *Gas Food Service Equipment*, 2016, reaffirmed 2021 .

ANSI Z83.18, *Recirculating Direct Gas-Fired Heating and Forced Ventilation Appliances for Commercial and Industrial Applications ,* 2017, reaffirmed 2021.

ANSI Z83.19/CSA 2.35, *Gas-Fired High-Intensity Infrared Heaters*, 2017, reaffirmed ~~2021~~ 2022 .

ANSI Z83.20/CSA 2.34, *Gas-Fired Tubular and Low-Intensity Infrared Heaters*, 2016, reaffirmed 2021.

ANSI Z83.26/CSA 2.~~27~~ 37 , *Gas-Fired Outdoor Infrared Patio Heaters*, 2020.

2.3.4 MSS Publications.

Manufacturers Standardization Society ~~(MSS)~~ of the Valve and Fittings Industry, 127 Park Street, NE, Vienna, VA 22180-4602~~, (703) 281-6613~~ . www.msshq.org

ANSI/MSS SP-58, *Pipe Hangers and Supports — Materials, Design, Manufacture, Selection, Application, and Installation,*~~2018~~ 2025 .

2.3.5 UL Publications.

Underwriters Laboratories Inc., 333 Pfingsten Road, Northbrook, IL 60062-2096.

UL 103, *Factory-Built Chimneys for Residential Type and Building Heating Appliances*, 2010, revised 2021.

UL 353, *Limit Controls*, 1994, revised 2011.

UL 378, *Draft Equipment*, 2006, revised 2013.

UL 441, *Gas Vents*, 2016, revised 2024.

UL 467, *Grounding and Bonding Equipment*, 2022.

UL 641, *Type L Low-Temperature Venting Systems*, 2010, revised ~~2018~~ 2022 .

UL 651, *Schedule 40, ~~and~~ 80, Type EB and A Rigid PVC Conduit and Fittings,* 2011, revised 2022.

UL 959, *Medium Heat Appliance Factory-Built Chimneys*, 2010, revised 2024.

UL 1738, *Venting Systems for Gas- Burning Appliances, Categories II, III, and IV*, 2023.

UL 1777, *Chimney Liners*, 2015, revised 2024.

UL 2158A, *Clothes Dryer Transition Ducts*, 2013, revised 2023.

UL 2561, *1400 Degree Fahrenheit Factory-Built Chimneys*, 2016, revised 2022.

UL 2989, *Outline of Investigation for Tracer Wire*, ~~2022~~ 2024 .

UL 60730-2-6, *Automatic Electrical Controls — ~~for Household and Similar Use;~~ Part 2-6 : Particular Requirements for Automatic Electrical Pressure Sensing Controls Including Mechanical Requirements*, 2016, revised ~~2021~~ 2024 .

2.3.6 US Government Publications.

US Government Publishing Office, 732 North Capitol Street, NW, Washington, DC 20401-0001. www.gpo.gov

Title 49, Code of Federal Regulations, Part 192, “Transportation of Natural and Other Gas by Pipeline: Minimum Federal Safety Standards.”

2.3.7 Other Publications.

Merriam-Webster’s Collegiate Dictionary, 11th edition, Merriam-Webster, Inc., Springfield, MA, 2020.

Submitter Information Verification

Committee: NFG-AAA

Submittal Date: Fri Sep 26 13:23:08 EDT 2025

Committee Statement

Committee Statement: Referenced standards are being updated to their latest edition year.

Response Message: SR-1-NFPA 54-2025

Second Revision No. 4-NFPA 54-2025 [Section No. 2.4]

2.4 References for Extracts in Mandatory Sections.

NFPA 31, *Standard for the Installation of Oil-Burning Equipment,* 2024 edition.

NFPA 70®, National Electrical Code®, 2023 edition.

NFPA 88A, *Standard for Parking Structures,* 2023 edition.

NFPA 90A, *Standard for the Installation of Air-Conditioning and Ventilating Systems,* 2024 edition.

NFPA 101®, *Life Safety Code®,* ~~2021~~ 2024 edition.

NFPA 5000®, Building Construction and Safety Code®, ~~2021~~ 2024 edition.

Submitter Information Verification

Committee: NFG-AAA
Submittal Date: Tue Sep 30 11:31:26 EDT 2025

Committee Statement

Committee Statement: Extracted standards are being updated to the latest reference year
Response Message: SR-4-NFPA 54-2025

Second Revision No. 14-NFPA 54-2025 [Section No. 3.3.80]

3.3.80* Qualified Agency.

Any individual, firm, corporation, or company that either in person or through a representative is engaged in and ~~that is~~ responsible for: (1) the design, installation, testing, removal, or replacement of gas piping or (2) the connection, installation, testing, repair, or servicing of appliances and equipment; experienced in such work; familiar with all precautions required; and compliant with all the requirements of the authority having jurisdiction.

A.3.3.80 Qualified Agency.

Removal relates only to piping that is in service. Removal of gas piping that has been properly purged from service does not require a qualified agency.

Submitter Information Verification

Committee: NFG-AAA

Submittal Date: Wed Oct 08 11:18:04 EDT 2025

Committee Statement

Committee Statement: The annex material is clarifying that removal of piping that is properly purged in accordance with this code does not require a qualified agency as defined by this code. There was some interpretation that the purged piping had to be removed immediately post purging under the supervision of the qualified agency, and once it has been purged there can be other things done to that pipe.

Response Message: SR-14-NFPA 54-2025

Public Comment No. 35-NFPA 54-2025 [Section No. 3.3.80]

Second Revision No. 18-NFPA 54-2025 [Section No. 3.3.91.6]

3.3.91.6 Piping System.

All pipe, tubing, valves, and fittings from the point of delivery up to and including the ~~outlets of the~~ appliance shutoff valve(s) .

Submitter Information Verification

Committee: NFG-AAA

Submittal Date: Wed Oct 08 16:39:09 EDT 2025

Committee Statement

Committee Statement: Removal of the term outlet removes the specificity as it relates to leak and pressure tests and it removes the positioning of the valve as it relates to those tests. Some AHJs were requiring the valves be opened to leak or pressure test the systems and this was not the intent.

Response Message: SR-18-NFPA 54-2025

Public Comment No. 8-NFPA 54-2025 [Section No. 3.3.91.6]

Second Revision No. 7-NFPA 54-2025 [Section No. 5.13.2]

5.13.2 Special Local Conditions.

Where local conditions include earthquakes , tornados , unstable ground, or flood hazards, ~~special consideration shall be given to~~ increased strength and flexibility of piping supports and connections shall be considered .

Submitter Information Verification

Committee: NFG-AAA

Submittal Date: Tue Oct 07 14:26:36 EDT 2025

Committee Statement

Committee Statement: Special does not add any additional value to the sentence as consideration covers the concept.

Response Message: SR-7-NFPA 54-2025

Second Revision No. 8-NFPA 54-2025 [Section No. 7.8.1.3]

7.8.1.3

Outlets shall be located ~~far enough from floors, walls, patios, slabs, and ceilings to permit~~ with enough clearance to allow the use of wrenches without straining, bending, or damaging the piping.

Submitter Information Verification

Committee: NFG-AAA

Submittal Date: Tue Oct 07 15:51:45 EDT 2025

Committee Statement

Committee Statement: The list is not all inclusive of the surfaces that could impede wrench usage and the intent is for there to be enough room to use wrenches on the piping without bending, straining, or damaging the piping.

Response Message: SR-8-NFPA 54-2025

Public Comment No. 22-NFPA 54-2025 [Section No. 7.8.1.3]

Second Revision No. 9-NFPA 54-2025 [Section No. 8.1.1.1]

8.1.1.1

Prior to acceptance and initial operation ~~or after repairs~~ , all piping installations shall be visually inspected and pressure tested to determine that the materials, design, fabrication, and installation practices comply with the requirements of this code.

Submitter Information Verification

Committee: NFG-AAA

Submittal Date: Tue Oct 07 16:02:11 EDT 2025

Committee Statement

Committee Statement: After repairs is redundant with the requirements in 8.1.1.3 and 8.1.14 which already cover repairs.

Response Message: SR-9-NFPA 54-2025

Public Comment No. 34-NFPA 54-2025 [Section No. 8.1.1.1]

Second Revision No. 10-NFPA 54-2025 [Section No. 8.2.3]

8.2.3* Leak Check.

~~Immediately after the gas is turned on into a new system or into a system that has been initially restored after an interruption of service, the piping system shall be checked for leakage. Where leakage is indicated, the gas supply shall be shut off until the necessary repairs have been made.~~

A.8.2.3

See Annex C for a suggested method. The performance of a leak check is only required on the section of the piping system that is being placed in service. If portions of the piping system have been removed from service and segregated by an isolation valve, it is not expected for out of service piping sections to be leak checked. Leak checking is only required for in service piping when service is restored following an interruption.

8.2.3.1

Immediately after the gas is turned on into a new system or into a system that has been initially restored after an interruption of service, the piping system shall be checked for leakage.

8.2.3.2

Where leakage is indicated, the gas supply shall be shut off until the necessary repairs have been made.

Submitter Information Verification

Committee: NFG-AAA

Submittal Date: Tue Oct 07 16:23:14 EDT 2025

Committee Statement

Committee Statement: The annex text provides further information on how leak checks are typically conducted in the field post repairs.

Response Message: SR-10-NFPA 54-2025

Public Comment No. 36-NFPA 54-2025 [Section No. 8.2.3]

Second Revision No. 12-NFPA 54-2025 [Sections 12.5.2, 12.5.3]

12.5.2 Plastic Piping.

~~Where plastic piping is used to vent an appliance, the appliance shall be listed for use with such venting materials and the appliance manufacturer's installation instructions shall identify the specific plastic piping material. The plastic pipe venting materials shall be labeled in accordance with the product standards specified by the appliance manufacturer or shall be listed and labeled in accordance with UL 1738, *Venting Systems for Gas-Burning Appliances, Categories II, III, and IV* .~~

12.5.2.1

Where plastic piping is used to vent an appliance, both of the following shall apply:

(1) The appliance shall be listed for use with ~~such venting materials~~ plastic piping material.

(2) The appliance manufacturer's installation instructions shall identify the specific plastic piping material.

12.5.2.2

~~The plastic~~ Plastic pipe venting materials shall be ~~labeled in accordance with the product standards specified by the appliance manufacturer or shall be~~ listed and labeled in accordance with UL 1738, *Venting Systems for Gas-Burning Appliances, Categories II, III, and IV*.

~~**12.5.3** Plastic Vent Joints.~~

~~Plastic pipe and fittings used to vent appliances shall be installed in accordance with the appliance manufacturer's installation instructions. Plastic pipe venting materials listed and labeled in accordance with UL 1738, *Venting Systems for Gas-Burning Appliances, Categories II, III, and IV* , shall be installed in accordance with the vent manufacturer's installation instructions. Where primer is required, it shall be of a contrasting color.~~

Submitter Information Verification

Committee: NFG-AAA

Submittal Date: Wed Oct 08 10:18:54 EDT 2025

Committee Statement

Committee Statement: Materials that conform to UL 1738 are listed as a system (piping and fittings), while other drain, waste, and vent materials can be mismatched which affects their tolerances related to proper vent performance. UL 1738 materials are specifically designed for the purposes of venting products of combustion. Drain, waste, and vent materials currently utilized for the purposes of venting have the opportunity to meet UL 1738 or equivalent.

To maintain the listing, the system needs to be installed in accordance with the venting manufacturer's installation instructions, which are submitted as part of the listing criteria and requiring their installation to UL 1738 is redundant.

Response Message: SR-12-NFPA 54-2025

Public Comment No. 29-NFPA 54-2025 [Sections 12.5.2, 12.5.3]

Public Comment No. 1-NFPA 54-2025 [Section No. 12.5.2]

Public Comment No. 17-NFPA 54-2025 [Sections 12.5.2, 12.5.3]

Public Comment No. 25-NFPA 54-2025 [Sections 12.5.2, 12.5.3]

Public Comment No. 30-NFPA 54-2025 [Sections 12.5.2, 12.5.3]

Public Comment No. 33-NFPA 54-2025 [Section No. 12.5.2]

Public Comment No. 49-NFPA 54-2025 [Section No. 12.5.2]

Public Comment No. 50-NFPA 54-2025 [Sections 12.5.2, 12.5.3]

Public Comment No. 51-NFPA 54-2025 [Sections 12.5.2, 12.5.3]

Public Comment No. 32-NFPA 54-2025 [Section No. 12.5.3]

Second Revision No. 13-NFPA 54-2025 [Section No. 12.11.6]

12.11.6 Joints.

Joints between sections of connector piping and connections to flue collars or draft hood outlets shall be fastened in accordance with one of the following methods:

(1) Sheet metal screws or rivets

(2) Vent connectors of listed vent material assembled and connected to flue collars or draft hood outlets in accordance with the manufacturers' instructions

(3) Other approved means

Submitter Information Verification

Committee: NFG-AAA

Submittal Date: Wed Oct 08 10:56:39 EDT 2025

Committee Statement

Committee Statement: Rivets are an acceptable means of fastening connectors, piping, and connections to flue collars or draft hood, and are an equivalent means to screws. They provide a means of interference fastening rather than friction fitting. The annex material was not added as the section with the changes is clear as to the intent to fasten all of the connectors, piping, and connections to flue collars or draft hood mechanically. Additionally banding and strapping are already considered in items (2) and (3).

Response Message: SR-13-NFPA 54-2025

Public Comment No. 46-NFPA 54-2025 [Section No. 12.11.6]

Second Revision No. 5-NFPA 54-2025 [Section No. A.4.6]

Detail SR-6

A.4.6

The distribution of hydrogen admixtures in natural gas in building systems does not change the safety or operability of fuel gas systems where reasonable limits on hydrogen percentages (by volume), such as 20 percent, are used. Pipe system components and sizing methods currently in the code can be used to size hydrogen admixtures up to 20 percent hydrogen by volume with the different natural gas sources already used in developing the sizing methods and based upon current technical justification of admixture compatibility.

Adding hydrogen to a fuel gas affects appliance function, specifically combustion behavior. The primary safety concern of increasing hydrogen percentages is burner "flashback," where burner flame front retreats into the burner itself (regression)~~, leading to~~and causes burner failure, ~~failure of the~~ burner system failure, and potential release of unburned gas in the building. Regression of flame fronts into burners occurs when hydrogen concentrations are increased and gas mixture flame speeds increase proportionally, exceeding the flow rate of the mixed fuel gas–air mixture to the flame within the combustion chamber. Hydrogen's burning velocity is approximately six times faster than that of methane. A 20 percent maximum threshold for hydrogen admixtures with natural gas represents a reasonable limit to minimize the potential of flashback behavior and associated safety risks of burner failure. This admixture maximum threshold is consistent with compatibility of piping system limit of 20 percent hydrogen.

Separate fuel gas systems independently supplied by pure hydrogen or higher admixture levels should be designed, installed, and operated in accordance with NFPA 2 until further guidance is provided within this code.

Appliances that are certified for use with natural gas enriched with more than 5 percent hydrogen should include an indication of the permissible fuel type.

Submitter Information Verification

Committee: NFG-AAA

Submittal Date: Tue Oct 07 10:49:47 EDT 2025

Committee Statement

Committee Statement: Systems using pure hydrogen or at hydrogen admixtures higher than those defined in this code should be designed, installed, and operated in accordance with NFPA 2 as they are outside the scope of this code and NFPA 2 is the recommended code for those systems.

Response Message: SR-5-NFPA 54-2025

Public Comment No. 15-NFPA 54-2025 [Section No. A.4.6]

Public Comment No. 23-NFPA 54-2025 [Global Input]

Second Revision No. 16-NFPA 54-2025 [Section No. D.2]

D.2

Where accumulation of gas inside a building is detected by odor or by activation of a combustible gas detector or system ~~designed and installed in accordance with~~ ~~NFPA 715~~ , the procedures in Section D.1 should be followed.

Submitter Information Verification

Committee: NFG-AAA

Submittal Date: Wed Oct 08 13:51:35 EDT 2025

Committee Statement

Committee Statement: The reference to an NFPA 715 for fuel gas detector is inappropriate in this annex on emergency procedures for gas leaks as NFPA 715 is on the installation of fuel gas detection not on fuel gas detection used by emergency responders.

Response Message: SR-16-NFPA 54-2025

Second Revision No. 33-NFPA 54-2025 [Sections H.1, H.2]

H.2 New Installation, Known Air Infiltration Rate Method.

Determine if the indoor volume is sufficient to supply combustion air for the following replacement installation example.

Example Installation 2: A 100,000 Btu/hr ~~fan-assisted~~ furnace and a 40,000 Btu/hr draft- hood- equipped water heater are being installed in a new single-family house. It was determined (either by use of the ASHRAE calculation method or blower door test) that the house has 0.65 air changes per hour (ACH). The furnace and water heater are being installed in a 20 ft × 35 ft basement with an 8 ft ceiling height.

Solution

(1) *Determine the required volume:* Because two types of appliances are located in the space — a ~~fan-assisted~~ furnace and a draft- hood- equipped water heater — the required volume must be determined for each appliance and then combined to determine the total required volume:

(a) ~~*Fan-assisted furnace*~~ *Furnace :* For structures for which the air infiltration rate is known, the method shown in 9.3.2.3 permits the use of Equation 9.3.2.~~2b~~ 3 to determine the required volume for a fan-assisted appliance. Paragraph 9.3.2.3.1 ~~9.3.2.3(3)~~ limits the use of the equation to air change rates equal to or less than 0.60 ACH. While the house was determined to have a 0.65 ACH, 0.60 ACH is used to calculate the required volume. Using Equation 9.3.2.~~2b~~ 3 , the required volume for a 100,000 Btu/hr fan-assisted furnace is calculated as follows:

$$\cancel{= \frac{15\ \text{ft}^3}{0.60}\left(\frac{100{,}000\ \text{Btu/hr}}{1000\ \text{Btu/hr}}\right) = 2500\ \text{ft}^3} \quad \text{DELETED} \qquad = \frac{21\ \text{ft}^3}{0.60}\left(\frac{100{,}000\ \text{Btu/hr}}{1000\ \text{Btu/hr}}\right) = 3500\ \text{ft}^3 \qquad \textbf{[H.2a]}$$

~~Paragraph 9.3.2.3 specifies a lower required volume limitation for fan-assisted appliances at no smaller than 25 ft³ per 1000 Btu/hr. From Table A.9.3.2.2(b), the lower limit is 2500 ft³ .~~

~~Because the calculated required volume of 2308 ft³ falls below the lower required volume limit, the lower limit of 2500 ft³ must be used as the minimum required volume.~~

(b) *Draft- hood- - equipped water heater:* For structures for which the air infiltration rate is known, the method shown in 9.3.2.3 permits the use of Equation 9.3.2.~~2a~~ 3 to determine the required volume for a draft- hood- equipped appliance. Paragraph 9.3.2.3.1 ~~9.3.2.3(3)~~ limits the use of the equation to air change rates equal to or less than 0.60 ACH. While the house was determined to have a 0.65 ACH, 0.60 ACH is used to calculate the required volume. Using Equation 9.3.2.~~2a~~ 3 , the required volume for the 40,000 Btu/hr water heater is calculated as follows:

$$= \frac{21\ \text{ft}^3}{0.60}\left(\frac{40{,}000\ \text{Btu/hr}}{1000\ \text{Btu/hr}}\right) = 1400\ \text{ft}^3 \qquad \textbf{[H.2b]}$$

~~Paragraph 9.3.2.3 specifies a lower required volume limitation for appliances other than fan-assisted at no smaller than 35 ft³ per 1000 Btu/hr. From Table A.9.3.2.3(a) , the lower limit is 1400 ft³ .~~

~~Because the calculated required volume of 1292 ft³ falls below the lower required volume limit, the lower limit of 1400 ft³ must be used as the minimum required volume.~~

(c) *Total required volume:* Subsection 9.3.2 states that the total required volume of indoor air is the sum of the required volumes for all appliances located in the space:

Total Required = ~~2~~ 3 500 ft^3+ 1400 ft^3 = ~~3~~ 4 900 ft^3

(2) *Determine available volume:* The available volume is determined as follows:

$$(20\ \text{ft} \times 35\ \text{ft}) \times 8\ \text{ft} = 5600\ \text{ft}^3 \qquad \textbf{[H.2c]}$$

Conclusion: The installation can use indoor air because the available volume of 5600 ft^3 exceeds the total required volume of ~~3~~ 4 900 ft^3. No outdoor air openings are required.

H.3 New Installation, Known Air Infiltration Rate Method.

Determine if the indoor volume is sufficient to supply combustion air for the following replacement installation example.

Example Installation 3: A 100,000 Btu/hr ~~fan-assisted~~ furnace and a 40,000 Btu/hr draft- hood- equipped water heater are being installed in a new single-family house. It was determined (either by use of the ASHRAE calculation method or blower door test) that the house has 0.30 air changes per hour (ACH). The furnace and water heater are being installed in a 20 ft × 35 ft basement with an 8 ft ceiling height.

Solution

(1) *Determine the required volume:* Because two types of appliances are located in the space — a ~~fan-assisted~~ furnace and a draft- hood- equipped water heater — the required volume must be determined for each appliance and then combined to determine the total required volume:

(a) ~~*Fan-assisted furnace*~~ *Furnace :* For structures for which the air infiltration rate is known, the method shown in 9.3.2.3 permits the use of Equation 9.3.2.~~2b~~ 3 to determine the required volume for a fan-assisted appliance. Paragraph ~~9.3.2.3 (3)~~ 9.3.2.3.1 limits the use of the equation to air change rates equal to or less than 0.60 ACH. Because 0.30 ACH is less than 0.60 ACH, 0.30 ACH can be used to calculate the required volume. Using Equation 9.3.2.~~2b~~ 3 , the required volume for a 100,000 Btu/hr fan-assisted furnace is calculated as follows:

$$= \frac{15\ \text{ft}^3}{0.30}\left(\frac{100{,}000\ \text{Btu/hr}}{1000\ \text{Btu/hr}}\right) = 5000\ \text{ft}^3$$

DELETED

$$= \frac{21\ \text{ft}^3}{0.30}\left(\frac{100{,}000\ \text{Btu/hr}}{1000\ \text{Btu/hr}}\right) = 7000\ \text{ft}^3 \qquad \textbf{[H.3a]}$$

~~Paragraph 9.3.2.3 specifies a lower required volume limitation for fan-assisted appliances at no smaller than 25 ft~~ ^{3} ~~per 1000 Btu/hr. From Table A.9.3.2.2(b), the lower limit is 2500 ft~~ ^{3} ~~.~~

~~Because the calculated required volume of 5000 ft~~ ^{3} ~~is above the lower required volume limit, use this amount as the minimum required volume.~~

(b) *Draft- hood~~–~~ - equipped water heater:* For structures for which the air infiltration rate is known, the method shown in 9.3.2.3 permits the use of Equation 9.3.2.~~2a~~ 3 to determine the required volume for a draft- hood- equipped appliance. Paragraph ~~9.3.2.3(3)~~ 9.3.2.3.1 limits the use of the equation to air change rates equal to or less than 0.60 ACH. Because 0.30 ACH is less than 0.60 ACH, 0.30 ACH is used to calculate the required volume. Using Equation 9.3.2.~~2a~~ 3 , the required volume for the 40,000 Btu/hr water heater is calculated as follows:

$$= \frac{21\ \text{ft}^3}{0.30}\left(\frac{40{,}000\ \text{Btu/hr}}{1000\ \text{Btu/hr}}\right) = 2800\ \text{ft}^3 \qquad \textbf{[H.3b]}$$

~~Paragraph 9.3.2.3 specifies a lower required volume limitation for appliances other than fan-assisted at no smaller than 35 ft~~ ^{3} ~~per 1000 Btu/hr. From Table A.9.3.2.3(a) , the lower limit is 1400 ft~~ ^{3} ~~.~~

~~Because the calculated required volume of 2800 ft~~ ^{3} ~~is above the lower required volume limit, use this amount as the minimum required volume.~~

(c) *Total required volume:* Subsection 9.3.2 states that the total required volume to use indoor air is the sum of the required volumes for all appliances located in the space:

Total Required = ~~5~~ 7 000 ft^3 + 2800 ft^3 = ~~7~~ 9 800 ft^3

(2) *Determine available volume:* The available volume is determined as follows:

$$(20\ \text{ft} \times 35\ \text{ft}) \times 8\ \text{ft} = 5600\ \text{ft}^3 \qquad \textbf{[H.3c]}$$

Conclusion: The installation cannot use indoor air alone, because the available volume of 5600 ft^3 is less than the total required volume of ~~7~~ 9 800 ft^3. Outdoor air openings can be sized in accordance with all air from the outdoors or by use of the combination of indoor/outdoor air method.

Supplemental Information

File Name	Description	Approved
54-2024_Annex_H.docx		

Submitter Information Verification

Committee: NFG-AAA

Submittal Date: Tue Dec 23 11:01:02 EST 2025

Committee Statement

Committee Statement: This revision was developed by NFPA staff for editorial purposes, in accrodance with 4.4.9.6.2 and 4.4.9.6.3 of the Regulations Governing the Development of NFPA Standards (www.nfpa.org/regs).

The examples for calculation of the KAIR method are changing as the requirements have changed and there is no longer a difference between fan assisted appliances and non-fan assisted appliances.

Response Message: SR-33-NFPA 54-2025

Second Revision No. 2-NFPA 54-2025 [Section No. K.1.2]

K.1.2 Other Publications.

K.1.2.1 ~~NACE~~ AMPP Publications.

~~NACE International~~ Association for Materials Protection and Performance , 15835 Park Ten Place, Houston, TX 77084-4906. www.nace.org

NACE SP0169, *Control of External Corrosion on Underground or Submerged Metallic Piping Systems*, 2024.

K.1.2.2 API Publications.

American Petroleum Institute, 200 Massachusetts Avenue NW, Suite 1100, Washington, DC 20001-5571.

API STD 1104, *Welding of Pipelines and Related Facilities,* 2021.

K.1.2.3 ASHRAE Publications.

ASHRAE, 180 Technology Parkway, Peachtree Corners, GA 30092. www.ashrae.org

ASHRAE 62.2, *Ventilation and Acceptable Indoor Air Quality in Residential Buildings*, 2022.

ASHRAE Handbook — Fundamentals, ~~2021~~ 2025 .

ASHRAE Handbook — HVAC Systems and Equipment, 2024.

K.1.2.4 ASME Publications.

American Society of Mechanical Engineers, Two Park Avenue, New York, NY 10016-5990~~, (800) 843-2763~~ . www.asme.org

ASME PCC-1, ~~*Guidelines for*~~ *Pressure Boundary Bolted Flanged Joint* ~~*Connections*~~ *Assembly* , 2022.

Boiler and Pressure Vessel Code, Section IX and Section IV, ~~2023~~ 2025 .

K.1.2.5 ASTM Publications.

ASTM International, 100 Barr Harbor Drive, P.O. Box C700, West Conshohocken, PA 19428-2959~~, (610) 833-9585~~ . www.astm.org

ASTM D2385, *Test Method for Hydrogen Sulfide and Mercaptan Sulfur in Natural Gas (Cadmium Sulfate - Iodometric Titration Method)*, 1981, reaffirmed 1990 (withdrawn 1995).

ASTM D2420, *Test Method* ~~*of*~~ *for Hydrogen Sulfide in Liquefied Petroleum (LP) Gases (Lead Acetate Method)*, ~~2013, reaffirmed 2018~~ 2023 .

K.1.2.6 AWS Publications.

American Welding Society, 8669 NW 36 Street, #130, Miami, FL 33166-6672~~, (800) 443-9353~~ . www.aws.org

AWS B2.1/B2.1M, *Specification for Welding Procedure and Performance Qualification*, ~~2014~~ 2021 .

AWS B2.2/B2.2M, *Specification for Brazing Procedure and Performance Qualification*, 2016.

K.1.2.7 CSA Group Publications.

CSA Group, 178 Rexdale Boulevard, Toronto, ON M9W 1R3, Canada~~, (216) 524-4990~~ . www.csagroup.org

CSA/ ANSI Z21.13/CSA 4.9, *Gas-Fired Low- Pressure Steam and Hot Water Boilers*, ~~2017(R~~ 2022~~)~~ .

CSA/ANSI Z21.50/CSA 2.22, *Vented Decorative Gas Appliances*, ~~2022~~ 2019, reaffirmed 2024 .

ANSI Z21.60/CSA 2.26, *Decorative Gas Appliances for Installation in Solid-Fuel Burning Fireplaces*, 2017, reaffirmed ~~(R~~ 2021~~)~~ .

K.1.2.8 UL Publications.

Underwriters Laboratories Inc., 333 Pfingsten Road, Northbrook, IL 60062-2096.

UL 651, *Schedule 40, ~~and~~ 80, Type EB and A Rigid PVC Conduit and Fittings*, 2011, revised 2022.

UL 795, *Commercial-Industrial* ~~*Gas Heating Equipment*~~ *Gas-Fired Package Boilers* , 2024.

K.1.2.9 US Government Publications.

US Government Publishing Office, 732 North Capitol Street, NW, Washington, DC 20401-0001. www.gpo.gov

Responding to Residential Carbon Monoxide Incidents~~,~~ : Guidelines for Fire and Other Emergency Response Personnel, US Consumer Product Safety Commission, July 23, 2002.

K.1.2.10 Other Publications.

Air Conditioning Contractors of America Manual J, Residential Load Calculations, 2016.

Piping Handbook, 2000, New York: McGraw-Hill Book Company.

Project Number 21323, *Validation of Installation Methods for CSST Gas Piping to Mitigate Indirect Lightning Related Damage*, Gas Technology Institute, 2015.

Submitter Information Verification

Committee: NFG-AAA

Submittal Date: Fri Sep 26 15:26:44 EDT 2025

Committee Statement

Committee Statement: Referenced standards are being updated to the latest edition year.

Response Message: SR-2-NFPA 54-2025

Second Revision No. 3-NFPA 54-2025 [Section No. K.2]

K.2 Informational References.

The following documents or portions thereof are listed here as informational resources only. They are not a part of the requirements of this document.

K.2.1 NFPA Publications.

National Fire Protection Association, 1 Batterymarch Park, Quincy, MA 02169-7471.

NFPA 30, *Flammable and Combustible Liquids Code*, ~~2021~~ 2024 edition.

NFPA 59, *Utility LP-Gas Plant Code*, ~~2021~~ 2024 edition.

~~NFPA 61 , *Standard for the Prevention of Fires and Dust Explosions in Agricultural and Food Processing Facilities* , 2020 edition.~~

NFPA 86, *Standard for Ovens and Furnaces*, ~~2024~~ 2023 edition.

NFPA 501A, *Standard for Fire and Life Safety Criteria for Manufactured Home Installations, Sites, and Communities*, ~~2021~~ 2025 edition.

NFPA 660 , *Standard for Combustible Dusts and Particulate Solids* , 2025 edition.

K.2.2 CSA Group Publications.

CSA Group, 178 Rexdale Boulevard, Toronto, ON M9W 1R3, Canada~~, (216) 524-4990~~ . www.csagroup.org

CSA/ ANSI~~/AGA~~ NGV 3.1~~/CSA 12.3~~ , *Fuel System Components for Compressed Natural Gas Powered Vehicles*, 2020.

~~AGA/~~ CSA/ANSI NGV 1, *Compressed Natural Gas Vehicle (NGV) Fueling Connection Devices*, ~~2017(R2021)~~ 2022 .

CSA/ANSI NGV 2, *Compressed Natural Gas Vehicle Fuel Containers*, 2023.

ANSI/LC 2, *Direct Gas-Fired Circulating Heaters for Agricultural Animal Confinement Buildings*, 1996, reaffirmed 2020.

ANSI/LC 2A, *Direct Gas-Fired Circulating Heaters for Agricultural Animal Confinement Buildings*, 1998, reaffirmed 2020.

ANSI Z21.12, *Draft Hoods*, 1990, reaffirmed 2020.

ANSI Z21.17/CSA 2.7, *Domestic Gas Conversion Burners*, 1998, reaffirmed 2019.

CSA/ANSI Z21.20/CSA C22.2 No. 60730-2- 5, *Automatic Electrical Controls — Part 2-5: Particular Requirements for Automatic Electrical Burner Control Systems*, ~~2014, reaffirmed~~ 2022.

CSA/ANSI Z21.21/CSA 6.5, *Automatic Gas Valves for Gas Appliances*, 2023.

CSA/ANSI Z21.23/CSA 6.6, *Gas Appliance Thermostats*, 2022.

ANSI Z21.35/CSA 6.8, *Pilot Gas Filters*, 2005, reaffirmed ~~2020~~ 2024 .

ANSI Z21.40.4/CSA 2.94, *Performance Testing and Rating of Gas-Fired~~,~~ Air-Conditioning and Heat Pump Appliances*, 2023.

ANSI Z21.42/CSA 2.15 , *Gas-Fired Domestic Illuminating Appliances*, 2024.

ANSI Z21.57, *Recreational Vehicle Cooking Gas Appliances*, 2010, reaffirmed 2021.

ANSI Z21.58/CSA 1.6, *Outdoor Cooking Gas Appliances*, 2022.

ANSI Z21.61, *Gas-Fired Toilets*, 1993, reaffirmed 2013.

ANSI Z21.66/CSA 6.14, *Automatic ~~Vent~~ Damper Devices for Use with Gas-Fired Appliances*, 2023.

ANSI Z21.71, *Automatic Intermittent Pilot Ignition Systems for Field Installation~~s~~* , 1993, reaffirmed 2021.

ANSI Z21.77/CSA 6.23, *Manually Operated Piezo-Electric Spark Gas Ignition Systems and Components*, 2005, reaffirmed ~~2020~~ 2024 .

ANSI Z21.78/CSA 6.20, *Combination Gas Controls for Gas Appliances*, 2010, reaffirmed 2020.

ANSI Z21.84, *Manually Lighted, Natural Gas, Decorative Gas Appliances for Installation in Solid-Fuel Burning Appliances*, 2017, reaffirmed 2021.

ANSI Z21.87/CSA 4.6, *Automatic Gas Shutoff Devices for Hot Water Supply Systems*, 2007, reaffirmed 2021.

ANSI Z21.88/CSA 2.33, *Vented Gas Fireplace Heaters*, 2019.

CSA/ANSI Z21.91, *Ventless Firebox Enclosures for Gas-Fired Unvented Gas Log Type Room Heaters*, 2020.

CSA/ANSI Z83.21/CSA C22.2 No.168, *Commercial Dishwashers*, 2020, reaffirmed 2025 .

K.2.3 MSS Publications.

Manufacturers Standardization Society of the Valve and Fittings Industry, 127 Park Street, NE, Vienna, VA 22180-4602. www.msshq.org

MSS SP-6, *Standard Finishes for Contact Faces of Pipe Flanges and Connecting-End Flanges of Valves and Fittings*, 2021.

K.2.4 US Government Publications.

US Government Publishing Office, 732 North Capitol Street, NW, Washington, DC 20401-0001. www.gpo.gov

Title 24, Code of Federal Regulations, Part 3280, “Manufactured Home Construction and Safety Standard.”

Submitter Information Verification

Committee: NFG-AAA

Submittal Date: Fri Sep 26 16:10:30 EDT 2025

Committee Statement

Committee Statement: Reference standards are being updated to the latest edition year.

Response Message: SR-3-NFPA 54-2025