Report of the Committee on

Fire Tests

William E. Fitch, *Chair*
Omega Point Laboratories Inc., TX [RT]

Jesse J. Beitel, Hughes Associates, Inc., MD [SE]
April L. Berkol, Starwood Hotels & Resorts Worldwide, Inc., NY [U]
Rep. American Hotel & Lodging Association
Robert G. Bill, Jr., FM Global, MA [I]
John A. Blair, The Dupont Company, DE [M]
Rep. Society of the Plastics Industry Inc.
Gordon H. Damant, Inter-City Testing & Consulting Corp. of California, CA [SE]
Thomas W. Fritz, Armstrong World Industries, Inc., PA [M]
Pravinray D. Gandhi, Underwriters Laboratories Inc., IL [RT]
James R. Griffith, Southwest Research Institute, TX [RT]
Gordon E. Hartzell, Hartzell Consulting, Inc., TX [SE]
Marcelo M. Hirschler, GBH International, CA [SE]
Alfred J. Hogan, Reedy Creek Improvement District, FL [E]
Rep. International Fire Marshals Association
William E. Koffel, Koffel Associates, Inc., MD [SE]
James R. Lawson, National Institute of Standards & Technology, MD [RT]
Rodney A. McPhee, Canadian Wood Council, Canada [M]
Frederick W. Mowrer, University of Maryland, MD [SE]
David T. Sheppard, US Department of Justice, MD [RT]
Rep. American Forest & Paper Association
Kuma Sumathipala, American Forest & Paper Association, DC [M]
T. Hugh Talley, Hugh Talley Company, TN [M]
Rep. Upholstered Furniture Action Council
Rick Thornberry, The Code Consortium, Inc., CA [SE]
Robert A. Wessel, Gypsum Association, DC [M]
Robert J. Wills, American Iron and Steel Institute, AL [M]
Peter J. Willse, GE Global Asset Protection Services, CT [I]

Alternates

Robert M. Berhinig, Underwriters Laboratories Inc., IL [RT]
(Alt. to Pravinray D. Gandhi)
Delbert F. Boring, Jr., American Iron and Steel Institute, OH [M]
(Alt. to Robert J. Wills)
Richard J. Davis, FM Global, MA [I]
(Alt. to Robert G. Bill)
Sam W. Francis, American Forest & Paper Association, PA [M]
(Alt. to Kuma Sumathipala)
Richard G. Gann, US National Institute of Standards & Technology, MD [RT]
(Alt. to James R. Lawson)
Paul A. Hough, Armstrong World Industries, Inc., PA [M]
(Alt. to Thomas W. Fritz)
James K. Lathrop, Koffel Associates, Inc., CT [SE]
(Alt. to William E. Koffel)
James A. Milke, University of Maryland, MD [SE]
(Alt. to Frederick W. Mowrer)
Arthur J. Parker, Hughes Associates, Inc., MD [SE]
(Alt. to Jesse J. Beitel)
Ronald A. Schulz, GE Global Asset Protection Services, MI [I]
(Alt. to Peter J. Willse)
Ineke Van Zeeland, Canadian Wood Council, Canada [M]
(Alt. to Rodney A. McPhee)
Joe Ziolkowski, American Furniture Manufacturers Association, NC [M]
(Alt. to T. Hugh Talley)

Nonvoting

Tod L. Jilg, Hoechst Celanese Corporation, NC [M]
Rep. American Fiber Manufacturers Association
Rohit Khanna, US Consumer Product Safety Commission, MD [C]
Robert H. Barker, American Fiber Manufacturers Association, VA [M}
(Voting Alt. to Nonvoting Principle)

Staff Liaison: **Milosh T. Puchovsky**

Committee Scope: This Committee shall have primary responsibility for documents on fire testing procedures, for reviewing existing fire test standards and recommending appropriate action to NFPA, for recommending the application of and advising on the interpretation of acceptable test standards for fire problems of concern to NFPA technical committees and members, and for acting in a liaison capacity between NFPA and the committees of other organizations writing fire test standards. This Committee does not cover fire tests that are used to evaluate extinguishing agents, devices, or systems.

This list represents the membership at the time the Committee was balloted on the text of this edition. Since that time, changes in the membership may have occurred. A key to classifications is found at the front of this book.

The Technical Committee on **Fire Tests** is presenting five Reports for adoption, as follows:

Report I: The Technical Committee proposes for adoption, a complete revision to NFPA 251, **Standard Methods of Tests of Fire Endurance of Building Construction and Materials,** 1999 edition. NFPA 251 is published in Volume 7 of the 2003 National Fire Codes and in separate pamphlet form.

NFPA 251 has been submitted to letter ballot of the **Technical Committee on Fire Tests,** which consists of 23 voting members. The results of the balloting, after circulation of any negative votes, can be found in the report.

Report II: The Technical Committee proposes for adoption, a complete revision to NFPA 253, **Standard Methods of Test for Critical Radiant Flux of Floor Covering Systems Using a Radiant Heat Energy Source**, 2000 edition. NFPA 253 is published in Volume 7 of the 2003 National Fire Codes and in separate pamphlet form.

NFPA 253 has been submitted to letter ballot of the **Technical Committee on Fire Tests**, which consists of 23 voting members. The results of the balloting, after circulation of any negative votes, can be found in the report.

Report III: The Technical Committee proposes for adoption, a complete revision to NFPA 255, **Standard Method of Test of Surface Burning Characteristics of Building Materials**, 2000 edition. NFPA 255 is published in Volume 7 of the 2003 National Fire Codes and in separate pamphlet form.

NFPA 255 has been submitted to letter ballot of the **Technical Committee on Fire Tests**, which consists of 23 voting members. The results of the balloting, after circulation of any negative votes, can be found in the report.

Report IV: The Technical Committee proposes for adoption, a complete revision to NFPA 285, **Standard Method of Test for the Evaluation of Flammability Characteristics of Exterior Non-Load-Bearing Wall Assemblies Containing Combustible Components Using the Intermediate-Scale, Multistory Test Apparatus**, 1998 edition. NFPA 285 is published in Volume 7 of the 2003 National Fire Codes and in separate pamphlet form.

NFPA 285 has been submitted to letter ballot of the **Technical Committee on Fire Tests**, which consists of 23 voting members. The results of the balloting, after circulation of any negative votes, can be found in the report.

Report V: The Technical Committee proposes for adoption, a complete revision to NFPA 286, **Standard Methods of Fire Tests for Evaluating Contribution of Wall and Ceiling Interior Finish to Room Fire Growth**, 2000 edition. NFPA 286 is published in Volume 7 of the 2003 National Fire Codes and in separate pamphlet form.

NFPA 286 has been submitted to letter ballot of the **Technical Committee on Fire Tests**, which consists of 23 voting members. The results of the balloting, after circulation of any negative votes, can be found in the report.

Note: To assist in review and comment, a draft of NFPA 255 is available and downloadable from the NFPA website at www.nfpa.org. It is also in CD ROM and print versions available from NFPA upon request by calling Customer Service at 1-800-344-3555.

255-1 Log# 13 FIZ-AAA **Final Action: Reject**
(Entire Document)

Submitter : Karin Rountree, Roseanne Gullo , Ampco Safety Tools
Recommendation: Anywhere ignition sources are a concern please require the following: Non-Sparking Tools are required where hazardous, combustible or flammable gases, liquids, dusts or residues are present.
Substantiation: Ordinary hand tools are usually made of steel and if struck, scraped, or dropped, can cause sparks which can be disastrous in an explosive environment. Non-Sparking Tools eliminate this hazard, however, standards regarding their application are incomplete, inconsistent and in some cases inaccurate.
We feel prevention is one of the most effective means of ensuring safety. If we can prevent an accident and save someone's life and business, if we can implement standards and codes to educate and inform before an accident happens, then we should make the necessary standards and codes to solve the problem.
The standards and recommended practices developed by NFPA are designed to improve overall safety and protection of property and personnel. Implementing a Non-Sparking Tools requirement wherever an ignition source is a concern would reduce the risk of fire and explosion where hazardous conditions are present.
Non-Sparking tools are recommended by Safety Engineers and Insurance Companies and meet OSHA and EPA requirements where hazardous, combustible or flammable gases, liquids, dusts and residues are present. Non-Sparking Tools should be used when storing, processing, handling hazardous materials as well as maintenance and repair operations within hazardous environments. All it takes is just one spark to cause an explosion.
Committee Meeting Action: Reject
Committee Statement: The submitter's recommendation is not applicable to NFPA 255.
Number Eligible to Vote: 23
Ballot Results: Affirmative: 20
Ballot Not Returned: 3 GRIFFITH, WESSEL, WILLS

255-2 Log# CP1 FIZ-AAA **Final Action: Accept**
(Entire Document (MOS))

Submitter : Technical Committee on Fire Tests
Recommendation: Completely revise entire document to comply with the NFPA Manual of Style as follows:
1. Revise Chapter 1 to contain administrative text only as follows:
(show revised text here or indicate where revised text can be found)
2. Revise Chapter 2 to contain only referenced publications cited in the mandatory portions of the document.
3. Revise Chapter 3 to contain only definitions.
4. Appendices are to be restructured and renamed as "Annexes."
5. All mandatory sections of the document must be evaluated for usability, adoptability, and enforceability language. Generate necessary committee proposals as shown (or indicate where shown).
6. Reword exceptions as requirements.
7. Single sentences per requirement as shown (or indicate where shown).
A pre-print of NFPA 255 is included at the end of this report. Additionally, proposals with affirmative actions were incorporated into this complete revision of the document with technical changes indicated in legislative text with the corresponding proposal number noted.
Substantiation: Editorial restructuring, to conform with the 2000 edition of the NFPA Manual of Style.
Committee Meeting Action: Accept
Number Eligible to Vote: 23
Ballot Results: Affirmative: 20
Ballot Not Returned: 3 GRIFFITH, WESSEL, WILLS
Comment on Affirmative
HIRSCHLER: The MOS changes made to the standard are, in general, excellent. However, there are some issues that the committee should reconsider:
(1) the decision to state that pipe insulation materials are outside of the scope of the standard, since pipe insulation materials have been tested with the Steiner tunnel test for many years, and the requirement to do so is still in NFPA 90A and in the Uniform Plumbing Code. Pipe insulation materials have always been considered to be building products.
(2) the decision not to continue stating that this test method does not address fire resistance, as stated in A.1.2.3 of the current edition, which reds: "A.1.3.2 See NFPA 251, Standard Methods of Tests of Fire Endurance of Building construction and Materials, for procedures for determining the performance, under fire exposure conditions, of building constructions and materials where incorporated in a test structure and subject to a standard exposing fire of controlled extent and severity." Fire resistance (the preferred term to "fire endurance") is often confused with better fire performance.
(3) the decision not to highlight the limitations in the scope.

255-3 Log# 5 FIZ-AAA **Final Action: Reject**
(1.1)

Submitter : Marcelo M. Hirschler , GBH International
Recommendation: Revise text to read as follows:
1.1 Scope.
1.1.1 This standard describes a method of testing the comparative surface burning characteristics of building materials with regard to flame spread and smoke developed.
1.1.2 This test method is applicable to any type of building material that by its own structural quality or the manner in which it is applied, is capable of supporting itself in position or is supported in the test furnace to ~~a~~ the thickness ~~comparable to its~~ recommended for use.
1.1.3 This test method is not applicable to any material that is not capable of supporting itself in position or of being supported in the test furnace.
1.1.4 This test method is not applicable to any material that generates flaming drips during the test.
1.1.5* This test method shall not be used to evaluate the fire resistance or materials or assemblies.
1.1.6 This test method shall not be used to provide information about the combustibility of materials.
1.1.7* This test method has other limitations based on the mounting methods.
A.1.1.5 See NFPA 251, Standard Methods of Tests of Fire Endurance of Building Construction and Materials, for procedures for determining fire resistance. NFPA 251 can assess the performance, under fire exposure conditions, of building constructions and materials where incorporated in a test structure and subject to a standard exposing fire of controlled extent and severity.
A.1.1.7
(1) Composite assemblies or panels that use metal or mineral facings and combustible interior cores, and that remain essentially impermeable to flame throughout the test, might not be completely evaluated for surface burning behavior by this test method, since the interior cores are not fully challenged.
(2) Some materials require support to remain in place during the test, such as loose-fill insulation supported by a metal screen. The supporting screen tends to produce low flame-spread indexes relative to those obtained for materials that are not so supported. Conversely, materials that are supported on rods, such as batt insulation, can produce higher flame spread indices if retained on the ceiling rather than allowed to burn on the floor.
(3) Some materials, such as composites, can delaminate during the test. Delamination can cause two possible responses: The material can expose two or more surfaces to the flame, increasing the flame spread index, or the material can sag or one end can drop into the fire chamber, impeding further flame spread and decreasing the flame spread index.
(4) Some materials, such as cellular plastics and thermoplastic and thermosetting materials, are difficult to evaluate. Thermoplastic and thermosetting materials that are not mechanically fastened often fall to the floor of the tunnel and usually produce relatively low flame spread index values. If supported on wire screen, rods, or other supports, these materials can become completely engulfed in flame, thereby creating a questionable comparison between the surface flame spread of nominal 1-in. (25.4-mm) thick red oak and the burning rate of these materials. Where the entire specimen is consumed, as opposed to the surface burning of red oak, much more oxygen is used and higher smoke developed indexes are usually obtained for these materials.
(5) The materials described in this section, (i.e., those that drip, melt, delaminate, draw away from the fire, or need artificial support) present unique problems and necessitate careful interpretation of the test results. Some of these materials that are assigned a low flame spread index based on this test method can exhibit an increasing propensity for generating flashover conditions during room fire tests with increasing area of material exposure and increasing intensity of fire exposure. The result, therefore, is probably not indicative of their performance if evaluated under realistic full-scale test procedures. Alternative means of testing should be used to fully evaluate some of these materials.
(6) The flame spread index of some materials varies depending on environmental conditions. The prescribed limits on the temperature and relative humidity for specimen conditioning and tunnel air supply [both 73.4°F ± 5°F (23°C ± 2.8°C), 50 % relative humidity ± 5 % relative humidity] were selected to minimize these effects.
Substantiation: This change applies MOS corrections and also includes issues of the lack of applicability of the test method, such as the evaluation of fire resistance (implied in the present edition) and the evaluation of combustibility (discussed in Appendix D of the present edition). It also adds the issue of non applicability of the test method to materials that cause flaming drips, which is an important concept, for improved fire safety. Finally, it brings some critical limitations from Appendix D further up front to the Annex for information on the scope.
Committee Meeting Action: Reject
Committee Statement: No technical substantiation was provided regarding the effects of flaming drips as presented by the submitter. Additionally, the committee believes that the language proposed by the submitter does not

provide any useful information and is confusing.
Number Eligible to Vote: 23
Ballot Results: Affirmative: 19 Negative: 1
Ballot Not Returned: 3 GRIFFITH, WESSEL, WILLS
Explanation of Negative:
HIRSCHLER: This proposal should have been accepted. The following changes are important to help the user of the test method and to highlight potential problems:
(1) To continue stating that this test method does not address fire resistance, as stated in A.1.2.3 of the current edition, which reads: "A.1.2.3 See NFPA 251, Standard Methods of Tests of Fire Endurance of Building Construction and Materials, for procedures for determining the performance, under fire exposure conditions, of building constructions and materials where incorporated in a test structure and subject to a standard exposing fire of controlled extent and severity." Fire resistance (the preferred term to "fire endurance" is often confused with better fire performance.
(2) To highlight the limitations in the scope.
(3) To make clear that this test method is not applicable to those materials that are not capable of supporting themselves in position or of being supported in the test furnace. If a material is not capable of supporting itself or of being supported, the test results are going to be misleading.
(4) To make clear the test method not applicable to any material that generates flaming drips during the test. The generation of flaming drips is a critical issue.

255-4 Log# 6 FIZ-AAA **Final Action: Accept in Principle**
(1.2)

Submitter : Marcelo M. Hirschler , GBH International
Recommendation: Revise text to read as follows:
1.2 Purpose.
1.2.1 The purpose of the test is to determine the comparative surface burning characteristics of the material under test by evaluating the flame spread over its surface and the resulting optical density of smoke, when exposed to a test fire, thus establishing a basis on which surface burning characteristics of different materials can be compared without specific consideration of all end-use parameters that might affect the surface burning characteristics.
1.2.2 In this test method, flame spread and optical density of smoke information is recorded and used to assess a flame spread index and a smoke developed index. ~~The smoke density, as well as the flame spread rate, is recorded in this test.~~ However, there is not necessarily a relationship between these ~~measurements~~ two sets of values .
Substantiation: This change applies MOS corrections and also corrects the language.
Committee Meeting Action: Accept in Principle
Accept the submitters proposed revisions with the following exceptions.
Do not add the phrase "optical density of" in two places.
Committee Statement: This is an editorial correction as the test method does address optical density of smoke.
Number Eligible to Vote: 23
Ballot Results: Affirmative: 19 Negative: 1
Ballot Not Returned: 3 GRIFFITH, WESSEL, WILLS
Explanation of Negative:
GANN: While I support the general sense of the Committee's rejection, the phrase "smoke optical density" should replace "smoke density" in all locations in order to remove ambiguity. The latter term could refer to a mass density.
Comment on Affirmative
HIRSCHLER: Referring to "optical density of smoke" is clearer than just talking about "smoke".

255-5 Log# 7 FIZ-AAA **Final Action: Accept**
(1.3 and 1.4)

Submitter : Marcelo M. Hirschler , GBH International
Recommendation: Revise text to read as follows:
1.3 Application.
~~1.2.3*~~ 1.3.1 It is the intent of this method of test to register performance during the period of exposure, not to determine suitability for use after the test exposure.
~~A.1.2.3 See NFPA 251, Standard Methods of Tests of Fire Endurance of Building Construction and Materials, for procedures for determining the performance, under fire exposure conditions, of building constructions and materials where incorporated in a test structure and subject to a standard exposing fire of controlled extent and severity.~~
~~1.2.4~~ 1.3.2 This method does not establish ratings of standards of performance for specific uses, because these ratings depend on service requirements.
1.4 Units ~~1.2.5~~ The values stated in U.S. customary units are to be regarded as the standard.
Substantiation: This change applies MOS corrections and eliminates an annex section which should go into the purpose section.
Committee Meeting Action: Accept
Number Eligible to Vote: 23
Ballot Results: Affirmative: 20
Ballot Not Returned: 3 GRIFFITH, WESSEL, WILLS

255-6 Log# 12 FIZ-AAA **Final Action: Accept**
(2.1.4, 2.3)

Submitter : Marcelo M. Hirschler , GBH International
Recommendation: Revise text to read as follows:
2.1.4* .... *(no change in present text)* The entire lid assembly shall be protected with flat sections of high-density [nominal 110 lb/ft 3 (1762 kg/m 3)] 1/4-in. (6.3-mm) ~~inorganic-reinforced~~ reinforced cement board (complying with ASTM C 1186 and passing ASTM E 136) , maintained in an unwarped and uncracked condition through continued replacement. This protective board shall be permitted to be either secured or not secured to the furnace lid. When in place, the top shall be sealed completely against the leakage of air into the fire test chamber during the test.
~~A.2.1.4 The following is being provided for informational purposes only and has not been independently verified, certified, or endorsed by NFPA or any of its technical committees. For inorganic-reinforced cement board, Manville Building Materials Corporation Flexboard II and Tunnel Building Products sterling board are suitable materials for this purpose.~~
2.3.1 A 1/4-in. (6.3-mm) ~~inorganic-reinforced~~ reinforced cement board shall be placed on the ledge of the furnace chamber, and the removable lid of the test chamber then shall be placed in position.
2.3.2 With the 1/4-in. (6.3-mm) ~~inorganic-reinforced~~ reinforced cement board in position on top of the ledge of the furnace chamber and with the removable lid in place, a draft shall be established to produce a 0.15-in. (3.8-mm) water column reading on the draft manometer, with the fire end shutter open 3 in. ± 1/16 in. (76 mm ± 1.6 mm), by manually setting the damper in relationship to the fan performance. The fire end shutter then shall be closed and sealed without changing the damper position. The manometer reading shall increase to at least 0.375 in. (9.53 mm), indicating that no excessive air leakage exists.
2.3.7 The test chamber shall be preheated with the 1/4-in. (6.3-mm) ~~inorganic-reinforced~~ reinforced cement board and the removable lid in place and with the fuel supply adjusted to the required flow. The preheating shall be continued until the temperature indicated by the floor thermocouple at 231/4 ft (7.09 m) reaches 150°F ± 5°F (66°C ± 2.8°C). During the preheat test, the temperatures indicated by the thermocouple at the vent end of the test chamber shall be recorded at intervals not longer than 15 seconds, and these readings shall be compared to the preheat temperature shown in the temperature-time curve in Figure 2.3.7. The preheating is for the purpose of establishing the conditions that exist following successive tests that indicate the control of the heat input into the test chamber. If appreciable variation from the temperature shown in the representative preheat curve is observed, suitable adjustments in the fuel supply shall be permitted based on red oak calibration tests.
2.3.11 Following the calibration tests for red oak, a similar test or tests shall be conducted on samples of 1/4-in. (6.3-mm) ~~inorganic-reinforced~~ reinforced cement board (complying with ASTM C 1186 and passing ASTM E 136) . The results shall be considered as representing a ~~classification~~ flame spread index and a smoke developed index of zero (0). The temperature readings shall be plotted separately on suitable coordinate paper, as shown in Figure 2.3.11, a representative curve for temperature-time development for inorganic-reinforced reinforced cement board.
Figure 2-3.11 Temperature-time curve for ~~inorganic-reinforced~~ reinforced cement board. (Figure was not submitted).
Substantiation: This just recognizes the fact that inorganic reinforced cement board no longer exists and a different reinforced cement board is used.
Committee Meeting Action: Accept
Number Eligible to Vote: 23
Ballot Results: Affirmative: 17 Negative: 3
Ballot Not Returned: 3 GRIFFITH, WESSEL, WILLS
Explanation of Negative:
FRITZ: I agree with Mr. Gandhi's comments.
GANDHI: UL is voting negative on this proposal as it disagrees with the specification of the type of cement board to be used. There is no technical substantiation provided by the submitter as to the reason for specifying one type of cement board. UL uses a cement board with a nominal density of 90 lb/ft3, and complies with ASTM C1288 and ASTM E136 and have found this specification to provide repeatable results. UL is working with the Tunnel Operators Group in ASTM E-5 to develop a specification of the cement board that should be used for testing.
SUMATHIPALA: I concur with Mr. Gandhi's comments.

255-7 Log# 4 FIZ-AAA **Final Action: Reject**
(2.2 and 2.2.3 (New))

Submitter : Marcelo M. Hirschler , GBH International
Recommendation: Add new text as follows:
2.2 Test Specimens.
2.2.1 The test specimen shall be at least 2 in. (51 mm) wider [nominally 201/4 in. ± 3/4 in. (514 mm ± 19 mm)] than the interior width of the tunnel and a total of 24 ft ± 1/2 in. (7.32 m ± 12.7 mm) in length. The specimen shall be permitted to be one, continuous, unbroken length or to consist of sections joined end to end. A 14 in. ± 1/8 in. (356 mm ± 3.1 mm) length of uncoated

16-gauge (0.053-in. to 0.060-in.) steel sheet shall be placed on the specimen mounting ledge in front of and under the specimen in the upstream end of the tunnel. The specimen shall be truly representative of the material for which test results are desired. Properties adequate for identification of the materials or ingredients, or both, from which the test specimen is made shall be recorded.
2.2.2 The test specimen shall be conditioned to a constant weight at a temperature of 73.4°F ± 5°F (23°C ± 2.8°C) and at a relative humidity of 50 percent ± 5 percent.
2.2.3 Test specimens that are not self supporting shall not be tested with the use of supporting wire screens unless documentation is available indicating that such a method of test will not produce an artificially low vale of flame spread index (see A.1.1.7). Otherwise, alternative means of testing shall be used to evaluate such materials.
Substantiation: Tests on chicken wire (poultry netting) if non self supporting materials tends to produce very low flame spread index results, in a misleading fashion.
Committee Meeting Action: Reject
Committee Statement: The Committee notes that the text as proposed is unclear and unenforceable, and that insufficient technical substation was provided. The Committee further notes that it is not their intent to limit the test method only to self-supporting test specimens, but that any product that is self-supporting should not be tested with supporting mechanisms in place.
Number Eligible to Vote: 23
Ballot Results: Affirmative: 19 Negative: 1
Ballot Not Returned: 3 GRIFFITH, WESSEL, WILLS
Explanation of Negative:
HIRSCHLER: The use of "chicken wire" (or poultry netting or wire screens) has been shown to cause artificially low flame spread index values and should be discouraged.

255-8 Log# 3 FIZ-AAA **Final Action: Accept**
(2.3.9 and 2.3.10 (New))

Submitter : Marcelo M. Hirschler , GBH International
Recommendation: Revise text to read as follows:
2.3.9 With the test equipment adjusted and conditioned as described in 2-3.2 through 2-3.8, a test or series of tests shall be made using nominal 25/32-in. (19.8-mm) select grade red oak flooring as a specimen that has been conditioned to 6 percent to 8 percent moisture content as determined by the procedure described in 2.3.10. ~~221°F (105°C) oven dry method described in ASTM D 2016, Tests for Moisture Content of Wood~~ . Observations shall be made at maximum distance intervals of 2 ft (0.61 m) and maximum time intervals of 30 seconds, and the time at which the flame reaches the end of the specimen that is 191/2 ft (5.94 m) from the end of the ignition fire shall be recorded. The end of the ignition fire shall be considered to be 4 1/2 ft (1.37 m) from the burners. The flame shall reach the end point in 51/2 minutes ± 15 seconds. The temperatures measured by the thermocouple near the vent end shall be recorded at least every 15 seconds. The photoelectric cell output shall be recorded immediately prior to the test and at least every 15 seconds during the test. The flame shall be permitted to be considered as having reached the end point when the vent end thermocouple registers a temperature of 980°F (527°C).
2.3.10 Using either a conductance or dielectric type meter (calibrated per ASTM D 4444, Standard Test Methods for Use and Calibration of Hand-Held Moisture Meters), monitor the moisture content of the select grade read oak flooring until the desired level is reached. Subject the trimmed sections only to the secondary oven-drying method (Method B) in ASTM D 4442, Standard Test Methods for Direct Moisture Content Measurement of Wood and Wood-Base Materials, for the final determination of moisture content.
Renumber 2.3.10 and 2.3.11 as 2.3.11 and 2.3.12. Also, delete ASTM D 2016 from the list of ASTM referenced standards and add ASTM D 4442 and ASTM D 4444.
Substantiation: ASTM D 2016 is an obsolete standard and has been replaced in all uses of the Steiner tunnel test (especially in ASTM E 84) by the procedure outlined above. NFPA 255 needs to be updated.
Committee Meeting Action: Accept
Number Eligible to Vote: 23
Ballot Results: Affirmative: 18 Negative: 2
Ballot Not Returned: 3 GRIFFITH, WESSEL, WILLS
Explanation of Negative:
FRITZ: I agree with Mr. Sumathipala's comments and revision.
SUMATHIPALA: I agree with the proposal but am voting negative to attempt to make two revisions:
a) Proposed text for 2.3.10 has a typo. Change "read oak" to "red oak".
b) Dielectric type moisture meters are commonly used to measure wood moisture content. The meter readings are, however, species-specific. Moisture meters are commonly factory-set for Douglas Fir or Southern Pine species and not Red Oak. A species-specific multiplier, provided by the meter manufacturer, would be needed to correct the meter reading.
Revise as follows:
2.3.10 Using either a conductance or dielectric type meter (calibrated per ASTM D 4444, Standard Test Methods for Use and Calibration of Hand-Held Moisture Meters), monitor the moisture content of the select grade ~~read~~ red oak flooring until the desired level is reached. Use the appropriate correction factor, if any, to convert the meter reading to be applicable to red oak. Subject the trimmed sections only to the secondary oven-drying method (Method B) in ASTM D 4442, Standard Test Methods for Direct Moisture Content Measurement of Wood and Wood-Base Materials, for the final determination of moisture content.

255-9 Log# 2 FIZ-AAA **Final Action: Accept in Principle**
(3.xx Flame Spread Index, Smoke Developed Index (New))

Submitter : Marcelo M. Hirschler , GBH International
Recommendation: Add the following new definitions:
3.xx Flame Spread Index. A comparative measure, expressed as a dimensionless number, derived from visual measurements of the spread of flame vs. time for a material tested in accordance with NFPA 255 or with ASTM E 84.
3.xx Smoke Developed Index. A comparative measure, expressed as a dimensionless number, derived from measurements of smoke obscuration vs. time for a material tested in accordance with NFPA 255 or with ASTM E 84
Also, after inserting the new definitions, renumber all other definitions.
Also, add a reference to ASTM E 84 to the list of referenced publications.
Substantiation: It is important to have definitions for flame spread index and smoke developed index in the code, as these terms are used extensively. The definitions proposed are based on the definitions in ASTM E 176, Standard Terminology of Fire Standards, developed by ASTM Committee E05 on Fire Standards. The exact definitions in ASTM E 176 are as follows:
flame spread index, n - a comparative measure expressed as a dimensionless number, derived from visual measurements of the spread of flame vs. time in test method E84.
Discussion: Classifications have been developed using these values. This index is different from that derived in Test Methods E162 or D3675 .
smoke developed index, n - a comparative measure expressed as a dimensionless number, derived from measurements of smoke obscuration vs. time in test method E84.
Discussion: Classifications have been developed using these values.
Committee Meeting Action: Accept in Principle
Accept the submitter's proposed new definitions with the following modifications:
3.xx Flame Spread Index. A comparative measure, ~~expressed as a dimensionless number,~~ derived from visual measurements of the spread of flame vs. time for a material tested in accordance with NFPA 255 ~~or with ASTM E 84.~~
3.xx Smoke Developed Index. A comparative measure, ~~expressed as a dimensionless number,~~ derived from measurements of smoke obscuration vs. time for a material tested in accordance with NFPA 255 ~~or with ASTM E 84~~
Committee Statement: The committee notes that the comparative measure is relative to red oak flooring and is not necessarily a dimensionless number. The committee does not believe that a reference to ASTM E 84 is necessary because NFPA 255 and ASTM E84 are not identical.
Number Eligible to Vote: 23
Ballot Results: Affirmative: 18 Negative: 2
Ballot Not Returned: 3 GRIFFITH, WESSEL, WILLS
Explanation of Negative:
GANN: As presented in 3.3.4, the two Indexes are dimensionless.
HIRSCHLER: The elimination of the phrase "expressed as a dimensionless number" is a mistake, because it is important to highlight that the flame spread index and the smoke developed index are quantities that are not in engineering units. This concept has been adopted by other organizations, including ASTM E5 (in both the terminology standard, ASTM E 176) and the Steiner tunnel test standard (ASTM E84) and by the International Code council (in its codes).

255-10 Log# 10 FIZ-AAA **Final Action: Reject**
(3.xx Self Supporting Specimen (New))

Submitter : Marcelo M. Hirschler , GBH International
Recommendation: Add a new definition to read as follows:
3.xx Self-supporting Specimen. A specimen that remains in place by its own structural characteristics both before and during the fire test.
Substantiation: This definition is needed because the concept is used in the standard. The definition comes from ASTM E 2231.
Committee Meeting Action: Reject
Committee Statement: The proposed term is not used in the standard.
Number Eligible to Vote: 23
Ballot Results: Affirmative: 19 Negative: 1
Ballot Not Returned: 3 GRIFFITH, WESSEL, WILLS
Explanation of Negative:
HIRSCHLER: The scope of the standard says that the test specimen must be capable of supporting itself in position, but that concept is not defined in the standard. Moreover, it is important to highlight the fact that this test method is not applicable to those materials that are not capable of supporting themselves in position or of being supported in the test furnace. If a material is not capable of supporting itself or of being supported, the test results are going to be misleading.

255-11 Log# 11 FIZ-AAA **Final Action: Accept**
(3.1)

Submitter : Marcelo M. Hirschler , GBH International
Recommendation: Revise text to read as follows:
3.1 Test Procedure.
3.1.1 With the furnace draft operating, the test specimen shall be placed on the test chamber ledges that have been completely covered with nominal 1/8 in. (3.1 mm) thick 1 1/2 in. (38.1 mm) wide woven fiberglass tape. The specimen shall be positioned as quickly as is practicable. The removable lid shall be placed in position over the specimen.
3.1.2 The completely mounted specimen shall remain in position in the chamber with the furnace draft operating for 120 seconds ± 15 seconds prior to the application of the test flame.
3.1.3 The burner gas shall be ignited. The distance and time of maximum flame front travel shall be observed and recorded with the room darkened. The test shall continue for 10 minutes , unless all the following conditions occur, in which case the test shall be permitted to be terminated prior to 10 minutes: (1) the specimen is completely consumed in the fire area, (2) no further progressive burning is evident and (3) the photoelectric cell reading has returned to the baseline .
~~Exception: The test shall be permitted to be terminated prior to 10 minutes, provided the specimen is completely consumed in the fire area and no further progressive burning is evident and the photoelectric cell reading has returned to the baseline.~~
3.1.4 The photoelectric cell output shall be recorded immediately prior to the test and at least every 15 seconds during the test.
3.1.5 The gas pressure, the pressure differential across the orifice plate, and the volume of gas used for each test shall be recorded.
3.1.6 When the test is completed, the gas supply shall be shut off, observations shall be made regarding smoldering or ~~smoldering and~~ other conditions within the test duct ~~shall be observed~~ , and the specimen shall be removed for further examination.
3.1.7 The flame-spread distance, temperature, and change in photoelectric cell readings shall be plotted separately on the same type of coordinate paper used in 2.3.10 in order to determine the flame spread index and smoke developed index values as development classifications outlined in Section 3.3. The flame-spread observations shall be recorded at maximum distance intervals of 2 ft (0.61 m) or maximum time intervals of 30 seconds. In addition, the peak and its time of occurrence shall be recorded. Flame spread shall be determined as the observed distance less 41/2 ft (1.37 m).
3.2 Analysis of Products of Combustion. Although not required as a part of this method, products of combustion shall be permitted to be drawn from the test duct for chemical analysis or during the test.
3.3 ~~Classification~~ Flame spread index and smoke developed index . The ~~flame-spread~~ flame spread index (FSI) shall be determined as specified in 3.3.1 through 3.3.4.
3.3.1 The total area, AT, under the flame-spread distance-time curve shall be determined by ignoring any flame front recession. For example, in Figure 3.3.1, the flame spread shown is 10 ft (3.05 m) in 21/2 minutes and then recedes. The area is calculated as though the flame had spread to 10 ft (3.05 m) in 2 1/2 minutes and then remained at 10 ft (3.05 m) for the remainder of the test or until the flame front again passed 10 ft (3.05 m) as indicated by the broken line in Figure 3.3.1. The area, AT, used for calculating the ~~flame-spread classification~~ flame spread index values is the sum of areas A1 and A2 as shown.
Figure 3.3.1 Example of distance-time curve with flame front recession. (Figure was not submitted)
3.3.2 If the total area, AT, is less than or equal to 97.5 min-ft (29.7 min-m), the ~~flame-spread~~ flame spread index equals 0.515 times the total area (FSI = 0.515 AT).
3.3.3 If the total area, AT, is greater than 97.5 min-ft (29.7 min-m), the ~~flame-spread~~ flame spread index equals 4900 divided by the difference between 195 and the total area, AT [FSI = 4900/(195 - AT)].
3.3.4 Smoke developed index. The test results for smoke shall be plotted using the coordinates in Figures 2.3.10(a), (b), and (c). The area under the curve shall be divided by the area under the curve for red oak and multiplied by 100 to establish a numerical smoke developed index by which the performance of the material can be compared with that of reinforced cement board, complying with ASTM C 1186 and passing ASTM E 136 ~~inorganic-reinforced cement board~~ and select grade red oak flooring, which have been arbitrarily established as 0 and 100, respectively. Allowance shall be permitted to be made for accumulation of soot and dust on the photoelectric cell during the test by establishing a revised baseline. The revised baseline shall be a straight line drawn from the zero (0) point (point on baseline where incipient light attenuation occurs) to the point established after the sample has been removed.
3.4 Report. The report shall include all of the following:
(1) A description of the material being tested
(2) Test results as calculated in Section 3.3 and the following also shall apply:
a. The individual ~~flame-spread~~ flame spread index data values shall be rounded to the nearest multiple of 5 points.
b. The individual smoke ~~development~~ developed index data values shall be rounded to the nearest multiple of 5 points.
(3) Details of the method used in placing the specimen in the test chamber
(4) Observations of the burning characteristics of the specimen during test exposure such as, but not limited to, delamination, sagging, shrinkage, and fallout.
Also add ASTM C 1186 and ASTM E 136 to the list of referenced standards.
Substantiation: These corrections are mostly terminology issues, but also incorporates the concept that inorganic reinforced cement board has now been replaced by a cement board that is not inorganic, but meets ASTM C 1186 (a spec) and ASTM E 136 (non combustibility test).
Committee Meeting Action: Accept
Number Eligible to Vote: 23
Ballot Results: Affirmative: 17 Negative: 3
Ballot Not Returned: 3 GRIFFITH, WESSEL, WILLS
Explanation of Negative:
FRITZ: I disagree with the Committee Action on this item. Section 3.1.3 states three conditions which must exit for terminating the test before the 10 minute period. However, the most important criterion is missing. The test should be terminated only if the specimen has burned the full length of the tunnel. This is the only definitive indication that the specimen will not obtain an increased flame spread index, even if it were to reignite. The concept of "no further progressive burning is evident" implies that the specimen has stopped less than the full length of the tunnel. However, how is one to be sure the flame front has not simply paused, and potentially will reignite and continue burning? This proposal should be rejected, or ultimately revised to require that the specimen has burned the full length of the tunnel before early termination is to be considered.
GANDHI: See My Explanation of Negative on 255-6 (Log #12).
SUMATHIPALA: I concur with Mr. Fritz and Mr. Gandhi.

255-12 Log# CP2 FIZ-AAA **Final Action: Accept**
(3.1.3 Exception)

Submitter : Technical Committee on Fire Tests
Recommendation: Delete the exception to section 3-1.3 in its entirety. Note that section 3-1.3 is proposed to be renumbered as 5.1.3.
Substantiation: The Committee believes that the exception is not necessary. If the sample is consumed prior to 10 minutes, meaningful test results cannot be obtained.
Committee Meeting Action: Accept
Number Eligible to Vote: 23
Ballot Results: Affirmative: 17 Negative: 3
Ballot Not Returned: 3 GRIFFITH, WESSEL, WILLS
Explanation of Negative:
GANDHI: The Committee Action and Substantiation is inconsistent with the action on 255-11 (Log #11) where the exception was moved to 3.1.3.
MCPHEE: I concur with Mr. Gandhi and Mr. Beitel.
SUMATHIPALA: I concur with Mr. Gandhi and Mr. Beitel.
Comment on Affirmative
BEITEL: In 255-11 (Log #11) this text is still included. Thus, if 255-12 (Log #CP2) is accepted, it does away with the language. If this is the case, 255-11 (Log #11) should have been modified.

255-13 Log# CP3 FIZ-AAA **Final Action: Accept**
(3.4)

Submitter : Technical Committee on Fire Tests
Recommendation: Add a new items (2) and (3) to section 3.4 which has been renumbered as section 5.4 to read as indicated below and renumber existing sections accordingly.
"(2) Information on the thickness of the test specimen and information provided by the test sponsor on the composition of the test specimen to identify its materials or ingredients or both.
(3) Information on whether the material was tested as a continuous or sectioned specimen."
Substantiation: The Committee believes that the new information needs to be included in the test report as it is pertinent to interpreting the test results.
Committee Meeting Action: Accept
Number Eligible to Vote: 23
Ballot Results: Affirmative: 20
Ballot Not Returned: 3 GRIFFITH, WESSEL, WILLS

255-14 Log# CP4 FIZ-AAA **Final Action: Accept**
(3.4(2))

Submitter : Technical Committee on Fire Tests
Recommendation: Add the following text to existing section 3.4(2)(b) which has been renumbered as 5.4(4)(b) to read as indicated below.:
"(b) Individual smoke development index value rounded to the nearest multiple of 5. For smoke developed index values of 200 or more, the reported value shall be rounded to the nearest multiple of 50. "
Substantiation: This is a current accepted practice by the testing laboratories that the Committee believes should be specified in the test method.
Committee Meeting Action: Accept

Number Eligible to Vote: 23
Ballot Results: Affirmative: 20
Ballot Not Returned: 3 GRIFFITH, WESSEL, WILLS
Comment on Affirmative
GANN: The Committee should revisit the current rounding to the nearest 5 points. I suspect that the accuracy, the repeatability, and reproducibility do not support this fineness.

255-15 Log# CP5 FIZ-AAA **Final Action: Accept**
(3.4(4))

Submitter : Technical Committee on Fire Tests
Recommendation: Add the following text to existing section 3.4(4) which has been renumbered as 5.4(6) to read as indicated below.:
"(6) Observations of the burning characteristics of the specimen during test exposure such as, but not limited, delamination, sagging, shrinkage, fallout and the presence of flaming droplets. "
Substantiation: The Committee believes that the new information needs to be included in the test report as it is pertinent to interpreting the test results.
Committee Meeting Action: Accept
Number Eligible to Vote: 23
Ballot Results: Affirmative: 17 Negative: 3
Ballot Not Returned: 3 GRIFFITH, WESSEL, WILLS
Explanation of Negative:
BEITEL: While I agree with the intent of the proposed change, other flaming items besides "droplets" occur many times. Items such as large, flaming particles, debris, etc., have been seen to fall from the sample. This needs to be revised since it appears to only address thermoplastic materials and not other materials which exhibit the same phenomena.
FRITZ: I agree with Mr. Beitel's comments.
SUMATHIPALA: I concur with Mr. Beitel.

255-16 Log# CP6 FIZ-AAA **Final Action: Accept**
(3.4(7) (New))

Submitter : Technical Committee on Fire Tests
Recommendation: Add a new section to 3.4 which has been renumbered as 5.4(7) to read as indicated below:
"(7) If the light transmission measurement reaches 0%, the time periods during which the measurement remains at 0% shall be reported"
Substantiation: The Committee believes that the new information needs to be included in the test report as it is pertinent to interpreting the test results. Without this information, invalid readings and interpretations are very likely to occur.
Committee Meeting Action: Accept
Number Eligible to Vote: 23
Ballot Results: Affirmative: 20
Ballot Not Returned: 3 GRIFFITH, WESSEL, WILLS

255-17 Log# 1 FIZ-AAA **Final Action: Reject**
(Appendix B)

Note: Since the ballot on this Proposal did not confirm the Committee Action, the Committee is soliciting public comment for review when the proposal is reconsidered by the Committee as a Public Comment.
Submitter : Marcelo M. Hirschler , GBH International
Recommendation: Revise text to read as follows:
~~Appendix B Guide to Mounting Methods~~
~~This appendix is not a part of the requirements of this NFPA document but is included for informational purposes only.~~
~~B-1 Introduction.~~
~~B-1.1 This guide has been compiled as an aid in selecting a method for mounting various building materials in the fire test chamber. These mountings are recommended for test method uniformity and convenience; they are not meant to imply restriction in the specific details of field installation.~~
~~B-1.2 For some building materials, it is possible that none of the methods described are applicable. In such cases, other means of support might need to be devised.~~
~~B-1.3 These recommended mounting methods are grouped according to building materials to be tested that are identified broadly by either the usage or the form of the material.~~
~~B-1.4 Wherever inorganic-reinforced cement board is specified as a backing in subsequent paragraphs, the material should be nominal 1/4 in. (6.3 mm) thick, high density [110 lb/ft3 ± 5 lb/ft3 (1762 kg/m³ ± 80 kg/m³)], and uncoated. Where metal rods are specified as supports, 1/4-in. (6.3-mm) metal rods spanning the width of the tunnel should be used. Rods should be placed approximately 2 in. (51 mm) from each end of each panel, and additional rods should be placed approximately at 2-ft (0.61-m) intervals, starting with the first rod at the fire end of each panel.~~
~~B-2 Acoustical and Other Similar Panel Products of Less Than 20 in. (508 mm).~~
~~B-2.1 For acoustical materials and other similar panel products with a maximum dimension of less than 20 in. (508 mm), metal splines or wood furring strips and metal fasteners should be used.~~
~~B-2.2 Steel tee splines for mounting kerfed-acoustical tile should be nominal ½ in. (12.7 mm) web 3/4 in. (19 mm) flange, formed No. 24 MS gauge sheet metal.~~
~~B-2.3 Wood furring frames for mounting acoustical materials and other similar panel products of less than 20 in. (508 mm) should be nominal 1 in. 2 in. (25.4 mm 51 mm) wood furring joined with corrugated metal fasteners. Two frames should be used, as shown in Figure B-2.3.~~
~~Figure B-2.3 Wood frame for acoustical materials and other similar panel products of less than 20 in. (508 mm).~~
~~B-3 Adhesives. To determine the surface burning characteristics of adhesives, they are to be mixed as specified in the manufacturer's instructions and applied to inorganic-reinforced cement board in the thickness or at the coverage rate recommended by the manufacturer. The adhesive application should be cured prior to testing.~~
~~B-4 Batt- or Blanket-Type Insulating Materials. Batt or blanket materials that do not have sufficient rigidity or strength to support themselves should be supported by metal rods inserted through the material and positioned so that the bottom of the rod is approximately 1/4 in. (6.3 mm) from the surface to be exposed to the flame. It is recommended that batt or blanket materials less than 1 in. (25.4 mm) thick not be mounted for testing in this manner.~~
~~B-5 Coating Materials, Cementitious Mixtures, and Sprayed Fibers.~~
~~B-5.1 Coating materials, cementitious mixtures, and sprayed fibers are to be mixed and applied to the substrate as specified in the manufacturer's instructions at the thickness, coverage rate, or density recommended by the manufacturer.~~
~~B-5.2 Materials intended for application to wood surfaces should be applied to a substrate made of nominal 25/32-in. (19.8-mm) tongue and groove red oak flooring or to other materials for which the surface burning characteristic is to be measured. The pieces are placed side by side and secured with four nailing strips spaced approximately 31/2 ft (1.07 m) apart to hold the pieces together (see Figure B-5.2). Two decks placed end to end are to be used.~~
~~Figure B-5.2 Wood deck for coating material.~~
~~B-5.3 Materials intended for application to particular combustible surfaces, but not wood, should be applied to the specific surfaces for which they are intended.~~
~~B-5.4 Materials intended for field application to noncombustible surfaces only should be applied to 1/4-in. (6.3-mm) inorganic-reinforced cement board.~~
~~B-6 Loose Fill Insulation. Loose fill insulation should be placed on galvanized steel screening with openings of approximately 3/64 in. (1.2 mm) supported on a test frame 20 in. (508 mm) wide 2 in. (51 mm) deep, made from steel angles of 2 in. 3 in. 3/16 in. (51 mm 76 mm 4.8 mm). Three frames are needed (see Figure B-6). The insulation should be packed to the density specified by the manufacturer.~~
~~Figure B-6 Steel frame for loose fill materials.~~
~~B-7 Plastics.~~
~~B-7.1 The term plastics includes foams, reinforced panels, laminates, grids, and transparent or translucent sheets.~~
~~B-7.2 Where any plastic remains in position in the tunnel during a fire test, no additional support is necessary. Thermoplastic materials and other plastics that do not remain in place should be supported by 1/4-in. (6.3-mm) round metal rods or 3/16 in. (4.8 mm) thick 2 in. (51 mm) wide steel bars, or 2-in. (51-mm) galvanized hexagonal wire mesh supported with metal bars or rods spanning the width of the tunnel.~~
~~B-8 Thin Membranes. Single-layer membranes of thin laminates consisting of a limited number of similar or dissimilar layers can be supported on poultry netting placed on metal rods as provided in Section B-4. Netting should be 20-gauge (51-mm) hexagonal galvanized steel poultry netting conforming to ASTM A 390, Standard Specification for Zinc-Coated (Galvanized) Steel Poultry Fence Fabric (Hexagonal and Straight Line). The specimen should be tested while bonded to a substrate representative of a field installation.~~
~~B-9 Wall Coverings.~~
~~B-9.1 Whenever an adhesive is used to attach a wall covering, adhesives specified by the manufacturer should be used in the test in a manner consistent with field practice.~~
~~B-9.2 Wall coverings intended for application directly to a noncombustible wall surface should be mounted to 1/4-in. (6.3-mm) inorganic-reinforced cement board unless tested in accordance with B-9.3 or B-9.4.~~
~~B-9.3 Wall coverings intended for application over gypsum board should be tested over 5/8-in. (15.9-mm) type X gypsum wall board complying with ASTM C 36, Standard Specification for Gypsum Wallboard. There is no need to mount the gypsum wallboard on studs.~~
~~B-9.4 Wall coverings intended for application over any other substrate should be tested over that substrate.~~
~~B-9.5 Wall coverings not intended to be adhered directly to a wall surface, but suspended or otherwise supported by framing or a track system, should be mounted for test in a manner that is representative of their installation.~~
~~B-10 Bonding. Where the surface burning characteristics of the material itself are required, specimens should be mounted on inorganic-reinforced cement board with Sairmix No. 7 high-temperature bonding mortar or the equivalent. If the specimen cannot be adhered using Sairmix No. 7, Kentile No. 9 epoxy has been found to be a suitable alternative. The application should be determined by a 3/32-in. (2.4-mm) notched trowel held at an 80 degree to 90 degree angle using a random pattern. The adhesive should be applied only to the specimen~~

~~back. The specimen then should be placed on the smooth side of the inorganic-reinforced cement board and rolled using a 100-lb (54.4-kg) roller [nominal 5-in. (127-mm) long sections placed end to end for a total length of 15 in. (381 mm)]. The prepared samples can be dead-stacked overnight but should be transferred to separate storage racks until tested. Each sample should be vacuumed prior to testing.~~

~~NOTE 1: Sairmix No. 7 high-temperature bonding mortar is manufactured by A.P. Green Refractories, Green Boulevard, Mexico, MO 65265.~~

~~NOTE 2: Kentile No. 9 epoxy is manufactured by Kentile Floors, Inc., Brooklyn, NY 11215.~~

Chapter 6 - Mounting Methods

6.1 Introduction.

6.1.1 This chapter has been compiled as an aid in selecting a method for mounting various building materials in the fire test chamber. These mounting methods are required for some materials for test method uniformity and convenience.

6.1.2 For some building materials, it is possible that none of the methods described are applicable. In such cases, other means of support might need to be devised.

6.1.3 These mounting methods are grouped according to building materials to be tested that are identified broadly by either the usage or the form of the material.

6.1.4 Wherever reinforced cement board is specified as a backing in subsequent paragraphs, the material shall be nominal 1/4 in. (6.3 mm) thick, complying with ASTM C 1186 and passing ASTM E 136, and uncoated. Where metal rods are specified as supports, 1/4-in. (6.3-mm) metal rods spanning the width of the tunnel shall be used. Rods shall be placed approximately 2 in. (51 mm) from each end of each panel, and additional rods shall be placed approximately at 2-ft (0.61-m) intervals, starting with the first rod at the fire end of each panel.

6.2 Acoustical and Other Similar Panel Products of Less Than 20 in. (508 mm).

6.2.1 For acoustical materials and other similar panel products with a maximum dimension of less than 20 in. (508 mm), use metal splines or wood furring strips and metal fasteners.

6.2.2 Steel tee splines for mounting kerfed-acoustical tile shall be nominal 1/2 in. (12.7 mm) web 3/4 in. (19 mm) flange, formed No. 24 MS gauge sheet metal.

6.2.3 Wood furring frames for mounting acoustical materials and other similar panel products of less than 20 in. (508 mm) shall be nominal 1 in. 2 in. (25.4 mm 51 mm) wood furring joined with corrugated metal fasteners. Two frames shall be used, as shown in Figure B-2.3.

Figure 6.2.3 Wood frame for acoustical materials and other similar panel products of less than 20 in. (508 mm). *Use present figure B2.3*

6.3 Adhesives. To determine the surface burning characteristics of adhesives, they are to be mixed as specified in the manufacturer's instructions and applied to inorganic-reinforced cement board in the thickness or at the coverage rate recommended by the manufacturer. The adhesive application shall be cured prior to testing.

6.4 Batt- or Blanket-Type Insulating Materials. Batt or blanket materials that do not have sufficient rigidity or strength to support themselves shall be supported by metal rods inserted through the material and positioned so that the bottom of the rod is approximately 1/4 in. (6.3 mm) from the surface to be exposed to the flame. This mounting method is not suitable for batt or blanket materials less than 1 in. (25.4 mm) thick.

6.5 Coating Materials, Cementitious Mixtures, and Sprayed Fibers.

6.5.1 Coating materials, cementitious mixtures, and sprayed fibers are to be mixed and applied to the substrate as specified in the manufacturer's instructions at the thickness, coverage rate, or density recommended by the manufacturer.

6.5.2 Materials intended for application to wood surfaces shall be applied to a substrate made of nominal 25/32-in. (19.8-mm) tongue and groove red oak flooring or to other materials for which the surface burning characteristic is to be measured. The pieces are placed side by side and secured with four nailing strips spaced approximately 31/2 ft (1.07 m) apart to hold the pieces together (see Figure B-5.2). Two decks placed end to end are to be used.

Figure 6.5.2 Wood deck for coating material. *Use existing Figure B5.2*

6.5.3 Materials intended for application to particular combustible surfaces, but not wood, shall be applied to the specific surfaces for which they are intended.

6.5.4 Materials intended for field application to noncombustible surfaces only shall be applied to 1/4-in. (6.3-mm) inorganic-reinforced cement board.

6.6 Loose Fill Insulation. Loose fill insulation shall be tested in one of two ways, as described in B-6.1 or B-6.2:

6.6.1 The specimen shall be placed on galvanized steel screening with openings of approximately 3/64 in. (1.2 mm) supported on a test frame 20 in. (508 mm) wide 2 in. (51 mm) deep, made from steel angles of 2 in. 3 in. 3/16 in. (51 mm 76 mm 4.8 mm). Three frames are needed (see Figure B-6).

6.6.2 The specimen shall be tested in accordance with ULC S1012.2.

6.6.3 The insulation shall should be packed to the density specified by the manufacturer.

Figure B-6 Steel frame for loose fill materials.

6.7 Pipe and Duct Insulation Materials or Systems.

6.7.1 Pipe and duct insulation materials or systems shall be tested in accordance with ASTM E 2231, Standard Practice for Specimen Preparation and Mounting of Pipe and Duct Insulation Materials to Assess Surface Burning Characteristics.

6.8 Thin Membranes. Single-layer membranes of thin laminates consisting of a limited number of similar or dissimilar layers shall be permitted to be supported on poultry netting placed on metal rods as provided in Section B-4. Netting shall be 20-gauge (51-mm) hexagonal galvanized steel poultry netting conforming to ASTM A 390, Standard Specification for Zinc-Coated (Galvanized) Steel Poultry Fence Fabric (Hexagonal and Straight Line). The specimen shall be tested while bonded to a substrate representative of a field installation. Testing shall only be conducted on poultry netting if no other mounting method is appropriate.

6.9 Vinyl and Paper Wall Coverings.

6.9.1 Whenever a vinyl or paper wall covering system uses an adhesive to attach a wall covering material, the adhesive specified by the manufacturer shall be used for construction of the test specimen in a manner consistent with field practice.

6.9.2 If the vinyl or paper wall covering system is a factory-produced wall panel, the adhesive shall be the same one used in the manufacture of the factory-produced wall panel.

6.9.3 Vinyl or paper wall coverings intended to be applied directly to a noncombustible wall surface. The specimens shall consist of the wall covering mounted on a 1/4 in. (6.3 mm) reinforced cement board, complying with ASTM C 1186 and passing ASTM E 136. Mount the specimens on the ledges of the test furnace without using additional means of support.

6.9.4 Vinyl or paper wall coverings intended to be applied over gypsum board. The specimens shall consist of the wall covering mounted on a 5/8 in. (15.9 mm) type X gypsum wall board, complying with ASTM C 36. The gypsum wallboard shall not be required to be mounted on studs. Mount the specimens on the ledges of the test furnace without using additional means of support.

6.9.5 Whenever a vinyl or paper wall covering has been tested using the test specimen described in B-9.4 (over gypsum wallboard), it shall not be required to be additionally tested mounted on a reinforced cement board.

6.9.6 Vinyl or paper wall coverings intended to be applied over substrates other than wood, gypsum board or non combustible surfaces. The specimens representing wall coverings intended for application over any substrate (except for wood, gypsum board or a non combustible surface) shall consist of the wall covering mounted on that substrate. Mount the specimens on the ledges of the test furnace without using an additional means of support.

6.9.7 Vinyl or paper wall coverings intended to be applied over a wood substrate. The specimens representing wall coverings intended for application over a wood substrate shall consist of the wall covering mounted on untreated plywood of the same thickness as the wood substrate used in field practice. Mount the specimens on the ledges of the test furnace without using an additional means of support.

6.9.8 Vinyl or paper wall coverings not intended to be adhered directly to a wall surface, but suspended or otherwise supported by framing or a track system. The specimens shall consist of the wall covering mounted for test in a manner that is representative of its installation. When this is not practical, for example because the material is not able to be made into a self-supporting test specimen, support the test specimen on poultry netting placed on steel rods. The netting shall be 20-gage, 2 in. (51 mm) hexagonal galvanized steel poultry netting conforming to ASTM A 390. The netting shall span the width of the tunnel furnace. The steel rods, 0.25 in. (6.3 mm) in diameter by 20 - 24 in. (510 - 610 mm) in length shall span the width of the tunnel furnace and shall be placed at approximately 2 ft (0.6 m) intervals starting with the fire end of the panel, approximately 2 in. (51 mm) from the end of the test specimen. Testing shall only be conducted on poultry netting if no other mounting method is appropriate.

6.10 Plastics.

6.10.1 The term plastics includes foams, reinforced panels, laminates, grids, and transparent or translucent sheets. The plastic materials included in this section are those that do not qualify under any of the previous sections.

6.10.2 Where any plastic remains in position in the tunnel during a fire test, no additional support is necessary. Thermoplastic materials and other plastics that do not remain in place shall be supported by 1/4-in. (6.3-mm) round metal rods or 3/16 in. (4.8 mm) thick 2 in. (51 mm) wide steel bars, or 2-in. (51-mm) galvanized hexagonal wire mesh supported with metal bars or rods spanning the width of the tunnel.

6.11 Bonding. Where the surface burning characteristics of the material itself are required, specimens shall ~~should~~ be mounted on inorganic-reinforced cement board with a high-temperature bonding mortar or the equivalent. The application shall be determined by a 3/32-in. (2.4-mm) notched trowel held at an 80 degree to 90 degree angle using a random pattern. The adhesive shall be applied only to the specimen back. The specimen then shall be placed on the smooth side of the inorganic-reinforced cement board and rolled using a 100-lb (54.4-kg) roller [nominal 5-in. (127-mm) long sections placed end to end for a total length of 15 in. (381 mm)]. The prepared samples shall be permitted to be dead-stacked overnight but shall be transferred to separate storage racks until tested. Each sample shall be vacuumed prior to testing. This method of testing produces results suitable exclusively for research purposes.

NOTE 1: Sairmix No. 7 high-temperature bonding mortar, manufactured by A.P. Green Refractories, Green Boulevard, Mexico, MO 65265 , and Kentile No. 9 epoxy , manufactured by Kentile Floors, Inc., Brooklyn, NY 11215, have been shown to be suitable adhesives .

Also, add ASTM A 390, ASTM C 36, ASTM C 1186, ASTM E 136 and ASTM E 2231 to the list of referenced ASTM standards in the new Chapter 2.

Substantiation: The mounting methods for the Steiner tunnel need to be

standardized. If they are not each lab will conduct its own way of running tests, with results that are not comparable to one another. Since Appendices (now called annexes) are normally not mandatory this proposal makes the mounting methods a new chapter, at the end of the standard (following Chapter 1, Administration; Chapter 2 References, Chapter 3, Definitions, Chapter 4, Test Equipment and Specimens and Chapter 5, Conduct of Test).
ASTM E 2231 has already been issued as a standard practice for mounting some types of materials (pipe and duct insulation materials and systems). All other mounting methods need to be made mandatory too.
The use of poultry netting has been shown to give misleading results and should only be used as a last resort.
Note: Supporting material is available for review at NFPA Headquarters.
Committee Meeting Action: Accept in Principle
Accept the submitter's proposed revisions with the following exception:
Revise the submitter's proposed section 6.7 and 6.7.1 to read:
"6.7 ~~Pipe and~~ Duct Insulation Materials or Systems.
6.7.1 ~~Pipe and~~ duct insulation materials or systems shall be tested in accordance with ASTM E 2231, Standard Practice for Specimen Preparation and mounting of Pipe and Duct Insulation materials to Assess Surface Burning Characteristics."
Committee Statement: The committee is of the opinion that pipe insulation materials are not within the scope of NFPA 255. Also see Committee Action and Statement to Proposal 225-18 (Log #14).
Number Eligible to Vote: 23
Ballot Results: Affirmative: 12 Negative: 8
Ballot Not Returned: 3 GRIFFITH, WESSEL, WILLS
Explanation of Negative:
BEITEL: I do not believe that it is appropriate to include the entire "Mounting Methods" appendix into the body of the standard. There are several reasons for this:
1) The proposed language is not in mandatory format (as an example Section 6.1.2)
2) Section 6.2.3, What type of wood, etc.
3) Section 6.6 allows two methods, need to specify only one
4) Section 6.11, in some cases, materials are bonded that cannot be rolled without damaging the material. These are just several examples of the problem of incorporating this Appendix information into the Standard. As a specific Standard Practice or Guides are developed, they can be referenced but by moving the existing Appendix into the Standard, we eliminate the capability of the labs and the test sponsors to use methods that may be required for their materials.
FRITZ: I disagree with the Committee Action on this item. The decision states that pipe insulation does not fit the Scope of NFPA 255. However, the Scope says the test method applies to building materials. There is an attempt here to twist the term building materials into building construction materials, which is not the terminology used in the Scope of NFPA 255. If we are to accept that only construction materials (as in NFPA 220) used for structural applications in building are to be tested in the tunnel, then most materials now being tested should be excluded. To say that pipe insulation is not included in the scope of 255, but duct insulation is, makes no sense at all. In many cases, pipe and duct insulations are the exact same material, but in a different geometry. Larger size pipes are insulated with sheet material, which can be exactly the same as that used for duct insulation.
There is no definition of building material in either NFPA 255 or NFPA 220, so how can we say certain materials do not fit the Scope of NFPA 255?
GANDHI: The Committee Statement is inconsistent with the requirements contained in NFPA 5000. Chapter 10 of NFPA 5000 describes the requirements for interior finish materials. Clearly these materials are not building construction materials. Other examples of building products that are tested in accordance with NFPA 255 are insulation materials (batts & blankets) that are also not considered as building construction materials based upon the Committee's statement.
UL tests many products under the UL companion Standard to NFPA 255 (UL 723) and feel that the test apparatus is suitable to measure the flame propagation and smoke developed characteristics for a wide variety of building products including pipe insulation, interior finish materials and wire & cable. In our opinion, pipe insulation is a building material, and within the scope of NFPA 255. The results from the NFPA 255 test are required in model codes for pipe insulation and UL has been providing certification for pipe insulations for many years. The Fire Test Committee is adopting a very narrow interpretation of building materials to only include materials of building construction. It is our opinion that pipe insulation, like other building materials, is essential component of the building and therefore should be considered as building material.
KOFFEL: This negative ballot is related to the action taken of Proposal 255-18 (Log #1). The Technical Committee has chosen to be more selective with respect to the use of NFPA 255. Votes taken on this item as well as others were based upon the existence of another test that could be used in lieu of NFPA 255. However, the Committee was inconsistent in their actions. For example, there are other tests available for interior finish materials on walls and ceilings. NFPA 255 has been historically used to evaluate pipe insulation and now the Committee is saying that it is not within the standard. If the Committee believes that other test methods should be used where an alternative to NFPA 255 exists, it should consistently limit the scope of NFPA 255 to only those products that cannot be tested by an alternative method.
MCPHEE: I am voting negative on incorporation of this new information. Use of the substrate of red oak flooring has not been substantiated, especially in light of the fact that the surface flammability of wood products vary.
SUMATHIPALA: The proposed Chapter 6 has many flaws and errors. I've noted a few below.
a) Proposed clause 6.5.2 states:
"Materials intended for application to wood surfaces shall be applied to a substrate made of nominal 25/32 in. tongue and grove read oak flooring..."
According to the National Oak Flooring Manufacturers Association (www.nofma.org) "nominal 25/32 in. flooring" is not a commercially available product. Besides, tongue and grove wood floorings are typically not intended to be a substrate for other finish materials. Tongue and grove oak floorings are intended to be used as a finished product.
Flame spread ratings of wood products vary from a low of 45 to a high of 200. To mandate the use of red oak, with a flame spread rating of 100, as a suitable substrate for materials intended to be applied over any and all wood surfaces is plain wrong.
b) Proposed clause 6.5.2, in reference to testing loose fill insulation, states:
"the specimen shall be tested in accordance with ULC 1012.2."
The committee has not seen this test standard or results of material tested according to this standard. Furthermore, ULC standards catalog does not list a standard with the designation ULC 1012.2 nor a standard with a title containing "loose fill" and "surface burning".
c) Proposed clause 6.7 mandates the use of ASTM E 2231 for assessing duct insulation. E2231 is a newly-developed standard that only came into being in 2002. As such, this Committee or the ASTM E05.22 has not had an opportunity to receive any feedback from users about its applicability, or the lack thereof, to assess all duct insulation systems. It is therefore premature to mandate application of E2231 without this feedback.
d) Proposed Clauses 6.9.3 through 6.9.5 appear to create a hierarchy of materials not recognized by the building codes. Presence of such text could jeopardize the use of NFPA by the Codes.
TALLEY: I agree with Mr. Sumathipala's and Mr. Blair's reasoning.
THORNBERRY: I have concerns about incorporating the suggested mounting methods currently contained in Appendix B within the body of NFPA 255, thus codifying them and making them mandatory. The manner in which this has been done in this proposal is not consistent with the Manual of Style for providing mandatory requirements in NFPA standards.
There is no need to include a Section 6.1 Introduction. Section 6.1.1 sounds like commentary rather than requirements since it indicates it has been complied as an aid in selecting a method for mounting various building materials. It goes on to further state that these mounting methods are required for some materials which begs the question about other materials. Section 6.1.2 again appears to be commentary referring to some building materials not being possible to fit within any of the mounting methods described in this new chapter. It goes on to say that in those cases other means of support might need to be devised. What kind of uniformity is achieved with this type of statement?
Section 6.3 indicates that the mounting methods are grouped according to building materials identified broadly by their usage or the form of their material. So now by codifying this within the standard, we are going to be causing arguments between the test sponsor and the lab regarding how the material is to be mounted to comply with the mandatory requirements of this document. How is an authority having jurisdiction to interpret how this test method is to be applied so that he can understand the results from the test method for use when products are proposed for incorporation in building construction in his jurisdiction? Also, I am concerned about including Section 6.7 which has at least been modified to eliminate pipe insulation materials or systems but still addresses duct insulation materials or systems. Personally, I do not consider duct insulation materials or systems to be classified as building materials for which this standard is applicable as specified in the Scope statement in Section 1.1. If someone wishes to test those types of materials using this test method, so be it, but that doesn't mean that the NFPA Fire Tests Technical Committee should condone the practice by incorporating mounting methods for doing such testing.
Comment on Affirmative
HIRSCHLER: Pipe insulation materials are not outside of the scope of the standard, since pipe insulation materials have been tested with the Steiner tunnel test for many years, and the requirement to do so is still in NFPA 90A and in the Uniform Plumbing Code. Pipe insulation materials have always been considered to be building products.

255-18 Log# 14 FIZ-AAA **Final Action: Reject**
(B.11 (New))

Note: Since the ballot on this Proposal did not confirm the Committee Action, the Committee is soliciting public comment for review when the proposal is reconsidered by the Committee as a Public Comment.
Submitter : T. David Mills , Bechtel Savannah River, Inc.
Recommendation: Add new paragraph B-11 to read:
Electrical wires, electrical cables and optical fiber cables should be placed on galvanized steel screening with openings of approximately 3/64 in. (1.2 mm) supported on a test frame 20 in. (508 mm) wide x 2 in. (51 mm) deep, made from steel angles of 2 in. x 3 in. x 3/16 in. (51 mm x 76 mm x 4.8 mm). Three

frames are needed (see Figure B-6). Wires and cables should be placed side by side to cover the width of the test chamber.

Substantiation: Since NFPA 255 has been indicated as a preferred test methods by NFPA 90A for cables in air handling spaces, it is only appropriate to have a specific mounting/support mechanism that addresses cables. The addition of the new paragraph will provide guidance to the testing agencies that will result in a repeatable consistent test for cables. Without this new paragraph, there is no assurance that cable testing results will be consistent from one testing lab to another testing lab.

Committee Meeting Action: Reject

Committee Statement: The committee believes that the application of NFPA 255 to determine the surface burning (flame spread and smoke density) characteristics of electrical wires, electrical cables and optical fiber cables is not appropriate. NFPA 255 is applicable to building materials or more appropriately materials of building construction. The committee does not consider electrical wires, electrical cables and optical fiber cables as materials of building construction. This opinion is consistent with a Standards Council decision (D#02-07) in which guidance was provided indicating that materials of building construction do not include electrical wire and cable, optical fiber cables, pneumatic tubing, fire sprinkler piping, optical fiber and communication raceways, etc. The committee notes that NFPA 262, Standard Method of Test for Flame Travel and Smoke of Wires and Cables for Use in Air-Handling Spaces was specifically developed for electrical wires and cables and optical fiber cables, and as such should be the test method used when evaluating such products. The committee makes reference to the Fire Protection Research Foundation Technical Report entitled the International NFPA 262 Fire Test Harmonization Project - A Horizontal Integrated Fire Test which lead to revisions to NFPA 262. This resulted in increased specificity and consistency in test apparatus design and construction, in data retrieval and in the protocols for conducting tests leading to an appropriate level of precision for testing wires and cables using NFPA 262.

Number Eligible to Vote: 23

Ballot Results: Affirmative: 7 Negative: 10 Abstain: 3

Ballot Not Returned: 3 GRIFFITH, WESSEL, WILLS

Explanation of Negative:

BEITEL: I am voting negative because the Committee Action needs further discussion at the next meeting. The issue as I see it, is what materials can or should be tested by NFPA 255? If the Committee wants to limit specific materials, it can but then the scope/purpose/application sections need to reflect this. In other Committee Action 255-17 (Log #1) the Committee stated that pipe insulation is not within the scope of NFPA 255. Following this logic, if the Committee wishes to say that wire & cable is not within the scope of 255, it is appropriate but these decisions and restrictions must be in the text of the standard so it is clear to users of the standard what the Committee's intent is. However, NFPA 255 is applied to many different types of materials and products. By limiting its applicability, then some materials or products may have no way to evaluate their performance. If the Committee wishes to use this standard for many different types of materials, then maybe the title should be changed such that the word "building" is removed or another way to is define "building materials" for use in this standard. These issues need to be discussed further.

BLAIR: The use of NFPA 255 (Steiner Tunnel) is appropriate for determining surface burning (flame spread and smoke density) of electrical wire and cable. The Fire Test Committee did not have the latest up to date information at their last meeting. The 25 ft tunnel has been used in the USA for over 30 years for classifying wire and cable. UL, ULC, etc., have used the tunnel with the mounting system as defined for plastics in Appendix to NFPA 255 (ASTM E84). UL used a different end point criteria (<5 ft flame and <0.5 optical density) and called the standard UL 910. The FTC adopted UL 910 as NFPA 262. An extensive study was subsequently done by the FPRF/FTC to determine precision. Since then all parties involved (UL, NEC, NFPA 90A, test laboratories, IEC) have shifted to using NFPA 255. This is the same test, same equipment, same technique and, therefore, should be same precision. UL has withdrawn UL 910.

The shift to NFPA 255 was due to:

a) the problem of trying to use the 910 criteria (<5 ft, 0.5 OD) for safety decisions. No one (UL, codes, AHJ's, NEC, 90A) could relate to whether optical density represented a fire hazard.

The FPRF subsequently conducted an extensive study to determine the applicability of NFPA 255 for wire and cable. The FRPF study demonstrated the effectiveness of NFPA 255 for wire and cable. The shift to NFPA 255 provides for a reasonable criteria of flame spread (i.e., <25) and smoke developed index (i.e., <50) that can and is being used for safety decisions and can be compared to other building products. Marcello is modifying ASTM E-84 to address mounting of wire and cable. The FTC should have voted to accept Log 14 and Log 15 in principle and used the present mounting system used by UL, ULC, ETL, etc. The Standards Council never determined that NFPA 255 was inappropriate for wire and cable. The substantiation given is inappropriate. NFPA Staff should have prevailed. Voters for Proposal 255-18 and 255-19 do not have a choice. If you vote against the proposal because the proposed mounting is inappropriate - the conclusion listed in the commentary is you are voting that NFPA 255 is inappropriate.

DAMANT: I vote negative on this ballot because after review of all the comments that have been received from other members of the committee I am of the opinion that these appear to be extremely controversial proposals. Therefore I feel that much more discussion on these ballot items is needed at a subsequent Fire Test Committee meeting before any decision is made to go forward with the substantial changes proposed.

GANDHI:

The Committee Statement is inconsistent with the requirements contained in NFPA 5000. Chapter 10 of NFPA 5000 describes the requirements for interior finish materials. Clearly these materials are not building construction materials. Other examples of building products that are tested in accordance with NFPA 255 are insulation materials (batts & blankets) that are also not considered as building construction materials based upon the Committee's statement.

UL tests many products under the UL companion Standard to NFPA 255 (UL 723) and feel that the test apparatus is suitable to measure the flame propagation and smoke developed characteristics for a wide variety of building products including pipe insulation, interior finish materials and wire & cable.

The Standards Council has never stated that NFPA 255 could not be used for testing wire and cable. In it's decision D#02-07 on July 19, 2002, they said that NFPA 90A and all other committees should refrain from using the term "Limited Combustible" for wire and cable but rather to specify a test method and the appropriate limits. This is exactly what NFPA 90A did at their last meeting, conform to the Standards Council Decision.

In our opinion, wire and cable is an essential component of the building environment and this is a building material, and within the scope of NFPA 255.

The Fire Test Committee is adopting a very narrow interpretation of building materials to only include materials of building construction. It is our opinion that wire and cable, as with other building materials are essential components of the building and therefore should be considered as building materials.

It would have been beneficial for the committee to allow a vote on UL's proposal for mounting cables in the NFPA 255 test. A lot of research went into the FPRF Research to demonstrate that NFPA 255 can be used for testing wire and cable. In fact, UL and ETL have been providing this listing using NFPA 255 for almost 2 years. The vote on UL's proposal would have added clarity around wire and cable mounting using the NFPA 255 standard.

UL believes that the correct committee action should have been "Accept in Principle". UL disagrees with the mounting method proposed by the submitter, but feels the method should be described in the Standard. The UL proposal presented at the Fire Test Committee meeting is provided herein.

Proposed Revision to NFPA 255 Mounting Methods

B-1.4 Wherever inorganic-reinforced cement board is specified as a backing in subsequent paragraphs, the material should be nominal 1/4 in. (6.3 mm) thick, high density [110 lb/ft^3 ± 5 lb/ft^3 (1762 kg/m^3 ± 80 kg/m^3)], and uncoated. Where metal rods are specified as supports, 1.4 in. (6.3 mm) diameter metal rods spanning the width of the tunnel should be used. Rods should be placed approximately 2 in. ± 0.5 in. (51 mm ± 12 mm) from each end of each panel, and additional rods should be placed approximately at 2 ft ± 2 in. (610 mm ± 50 mm) intervals, starting with the first rod at the fire end of each panel. Where poultry netting is specified as support in conjunction with metal rods, the netting should be 20-gauge (51-mm ± 3 mm) hexagonal galvanized steel poultry netting conforming to ASTM A390, Standard Specification for Zinc-Coated (Galvanized) Steel Poultry Fence Fabric (Hexagonal and Straight Line).

B-8 Thin Membranes. Single-layer membranes of thin laminates consisting of a limited number of similar or dissimilar layers can be supported on poultry netting placed on metal rods as provided in paragraph B-1.4 ~~in Section B.4. Netting should be 20-gauge (51-mm) hexagonal galvanized steel poultry netting conforming to ASTM A390, Standard Specification for Zinc-Coated (Galvanized) Steel Poultry Fence Fabric (Hexagonal and Straight Line).~~ For specimens intended for field application to substrates, the specimen should be tested while bonded to a substrate representative of a field installation.

B-11 Wires and Cables. Wire and cable specimens should consist of 24 ft ± 6 in. (732 mm ± 152 mm) lengths of cables installed in a single layer supported by galvanized hexagonal wire mesh and metal rods, spaced approximately at 1-ft ± 2 in. (305 mm ± 5 mm) intervals. The number of cable specimens should equal 20 in. (508 mm) divided by the cable diameter, in. (mm) as determined using a diameter tape or equivalent. The result of the division shall be rounded off to the nearest lower whole number of specimens. The specimens shall be laid across the support rods in parallel, adjacent, straight rows as uniformly as possible such that any space between adjacent specimens is kept to a minimum and 1 in. ± 0.25 in. (25 mm ± 6 mm) of the overall specimen width rests on the support ledge on both sides.

Substantiation:

The description of the poultry netting is removed from Section D-8 and added to introductory paragraph B-1.4 to avoid duplication in multiple sections.

A new Section B-11 is added for Wire and Cable. This method has been successfully used by Underwriters Laboratories Inc., for the past few years to certify wire and cable in accordance with Limited Combustible requirements of NFPA. There are a currently nine wire and cable manufacturers who are certified by UL for Limited Combustibility.

GANN: I should precede my negative by saying that the various tunnel methods are typically being used for applications for which the apparatus is technically inappropriate.

That said, there has now been extensive technical work by the FPRF to establish a reasonable basis for using this apparatus to test arrays of cable. Apparently 90A now cites NFPA 255 for this application. These are the two criteria for establishing the relevance of a test method, and the Fire Test Committee should abide by that.

HARTZELL: NFPA 255 has been used for many years for the testing and

listing of electrical wire and cable, with a relatively recent FPRF study having demonstrated the effectiveness of this standard. I see no technical reason to suddenly say that wire and cable are outside the scope of NFPA 255.
The Standards Council decision referenced (D #02-07) appears to me to deal with an issue of "limited combustible" materials. It does not say that NFPA 255 is inappropriate for wire and cable. These two issues, although related, are different.
The issue of the appropriateness of NFPA 255 for wire and cable came up at the Ft. Lauderdale meeting under the seemingly innocuous agenda item of the MOS report on NFPA 255. The meeting was rather poorly attended by voting members, particularly those with a stake in the decision. If the appropriateness of NFPA 255 for wire and cable is to be addressed, it should be an agenda item so that ample opportunity might be given for informed discussion among concerned parties.
HOGAN: 255 test is appropriate for wire and cable and has been for approximately 30 years.
MCPHEE: There hasn't been suitable discussion or technical information presented to justify not continuing the use of NFPA 255 to evaluate electrical wire and cable, which is currently the case. This should be withdrawn and studied further.
SHEPPARD: I think that using NFPA 255 for cables has merit. The NFPA 255 and NFPA 262 test methods are essentially identical and only the mounting methods and calculation methods differ. Both calculation methods are comparison methods and neither provides fundamental material property information that can be used in hazard calculations.
Since, both standards use essentially the same equipment and test method, the same calculations should be conducted on the data so that relative comparisons are possible.
I think that the committee should accept in principal the proposed change from 255-18 (Log #14) and 255-19 (Log #15) and the committee should review the changes to assure that they are consistent with the harmonized NFPA 262.
SUMATHIPALA: NFPA 255 is currently used to evaluate electrical wire and cable. The substantiation to reject this proposal and hence prevent the use of NFPA 255 to assess electrical wire and cable lacks technical merit.
Explanation of Abstention:
FRITZ: I am abstaining from voting on this item. However, I strongly oppose the assumption that the committee believes wire and cable are outside the Scope of NFPA 255 because they are not materials of building construction, as the term is applied in NFPA 220. The Scope of NFPA 255 uses the term building materials. Since this term is not defined, how can we say what is in the Scope and what is not?
Furthermore, there is an attempt to relate the NFPA 255 test to the Standards Council decision D 02-07. Classification in the tunnel test do not determine if a material is noncombustible or limited combustible, so how can that decision apply to tunnel test results?
HIRSCHLER: I am a special expert on this Technical Committee and this proposal has the potential to affect a client interest.
KOFFEL: In accordance with Standards Council policy I will abstain from balloting on this item. However, Standards Administration has indicated that the regulations do permit me to provide a ballot comment. Despite that fact that the Committee knew that NFPA 255 has been used for years to test wire and cable and despite the fact that the Committee was advised that an existing Fire Protection Research Foundation Report supported the use of NFPA 255 to evaluate wire and cable, the Committee voted to restrict the application of NFPA 255. It should be noted that several Committee members voted without even having read the Fire Protection Research Foundation Report.
There were two reasons given for restricting the use of NFPA 255. The first reason was an overall concern with the test method and therefore a desire to restrict the use of NFPA 255 when an alternative test method is available. However, this was not done consistently throughout the standard. Somewhat related to the first reason, the second argument focused on the fact that NFPA 262 is specifically designed to test wire and cable. Misinformation was provided during the meeting indicating that NFPA 262 was to be used for wire and cable and that NFPA 255 was not used or reference by other codes and standards for wire and cable.
The fact is that the NFPA Technical Committee responsible for NFPA 92A has recently voted to restrict the use of wire and cable tested to NFPA 262. The NFPA 262 test procedure was developed because at the time wire and cable could not meet the requirements for limited combustible materials which requires testing per NFPA 255. The NFPA 262 test procedure is based upon a limited quantity of cable. The reason NFPA 90A has supported restricting the use of wire and cable tested to NFPA 262 is that the quantity of cable in plenums today is far greater than that which was anticipated when NFPA 262 was developed.
The Committee has also referred to a Standards Council decision regarding the use of the term "limited combustible" as a basis for their action. There are other materials for which NFPA 255 is being used which would not be consistent with the Committee's interpretation of what constitutes a "building material."
If the Committee has a concern with the use of NFPA 255, it should consistently restrict the use of NFPA 255 where another test method exists. Knowing that NFPA 255 has been used for years to evaluate wire and cable and knowing the intent of the Technical Committee responsible for NFPA 92A, the Committee should not restrict the use of NFPA 255 until a suitable alternative test procedure for large quantities of wire and cable has been developed.

255-19 Log# 15 FIZ-AAA **Final Action: Reject**
(B..11 (New))

Note: Note: Since the ballot on this Proposal did not confirm the Committee Action, the Committee is soliciting public comment for review when the proposal is reconsidered by the Committee as a Public Comment.
Submitter : T. David Mills , Bechtel Savannah River, Inc.
Recommendation: Add new paragraph B-11 to read:
Electrical wires, electrical cables and optical fiber cables should be placed on galvanized steel cable tray as shown in Figure B-11. Wires and cables should be placed side by side to cover the width of the test chamber.

See Figure B-11 on the next page

Substantiation: Since NFPA 255 has been indicated as a preferred test methods by NFPA 90A for cables in air handling spaces, it is only appropriate to have a specific mounting/support mechanism that addresses cables. The addition of the new paragraph will provide guidance to the testing agencies that will result in a repeatable consistent test for cables. Without this new paragraph, there is no assurance that cable testing results will be consistent from one testing lab to another testing lab. The new Figure B-11 should provide enough detail to fabricate the tray and support for the lip to rest on the chamber ledge.
Committee Meeting Action: Reject
Committee Statement: See Committee Action and Statement for Proposal 255-18 (Log #14).
Number Eligible to Vote: 23
Ballot Results: Affirmative: 7 Negative: 10 Abstain: 3
Ballot Not Returned: 3 GRIFFITH, WESSEL, WILLS
Explanation of Negative:
BEITEL: See my Explanation on 255-18 (Log #14).
BLAIR: See my Explanation of Negative on 255-18 (Log #14).
DAMANT: See my Explanation of Negative on 255-18 (Log #14).
GANDHI: See my Explanation of Negative on 255-18 (Log #14).
GANN: See my Explanation of Negative on 255-18 (Log #14).
HARTZELL: See my Explanation of Negative on 255-18 (Log #14).
HOGAN: See my Explanation of Negative on 255-18 (Log #14).
MCPHEE: See my Explanation of Negative on 255-18 (Log #14).
SHEPPARD: See my Explanation of Negative on 255-18 (Log #14).
SUMATHIPALA: See my Explanation of Negative on 255-18 (Log #14).
Explanation of Abstention:
FRITZ: See my reason for abstaining on 255-18 (Log #14). I also disagree that rejection of NFPA 255-18 (Log #14) and 255-19 (Log #15) empowers the chair to communicate an opinion to the NFPA Air Conditioning Committee. Any letter from the Fire Test Committee should be voted on and approved by the entire Fire Test Committee. At the time this communication was discussed, very few of the members remained at the meeting. It is not reflected anywhere in this ballot. How are the members to know that a decision to reject an item is also authorization to communicate an opinion of a few of the members to another NFPA committee?
HIRSCHLER: See my reason for abstaining on Proposal 255-18 (Log #14).
KOFFEL: See my Explanation of Abstention on 255-18 (Log #14).

255-20 Log# 8 FIZ-AAA **Final Action: Accept in Principle in Part**
(D.7)

Submitter : Marcelo M. Hirschler , GBH International
Recommendation: Revise text to read as follows:
D.7 Uses and Limitations.
D.7.1 The orientation of the specimen in this method is in a horizontal ceiling position. This orientation places some limitations on the type of material that can be realistically mounted during testing. Prior to 1960, the tunnel was used primarily for the investigation of the surface burning characteristics of homogeneous compositions of ceiling and wall finishes, such as acoustical tiles, wall coverings, coatings, and various types of decorative panel, with all materials able to remain in the ceiling position throughout the test.
D.7.2 Through adaptation (see ~~Appendix B~~ Chapter 6), the procedure was expanded to include the evaluation of composites and assemblies. Chapter 6 describes the mounting methods to be used for the following types of products: acoustical and similar panel products of less than 20 in. (508 mm); adhesives; batt and blanket-type insulating materials; coating materials, cementitious mixtures, and sprayed fibers; loose fill insulation; pipe and duct insulation materials and systems; thin membranes, vinyl and paper wall covering materials and plastics. Special mounting methods should be used for other materials, suitable as a reasonable representation of the field use of the material. ~~Appendix B contains mounting recommendations for a number of individual categories of product classification, including acoustical and similar panel products; composite building units; adhesive; batt and blanket insulation; fire retardant and general-purpose coatings; loose-fill thermal insulations; treated and untreated plywoods; lumber and wood composition boards; foamed, molded, reinforced, and laminated plastics; and sheet-type wall coverings.~~

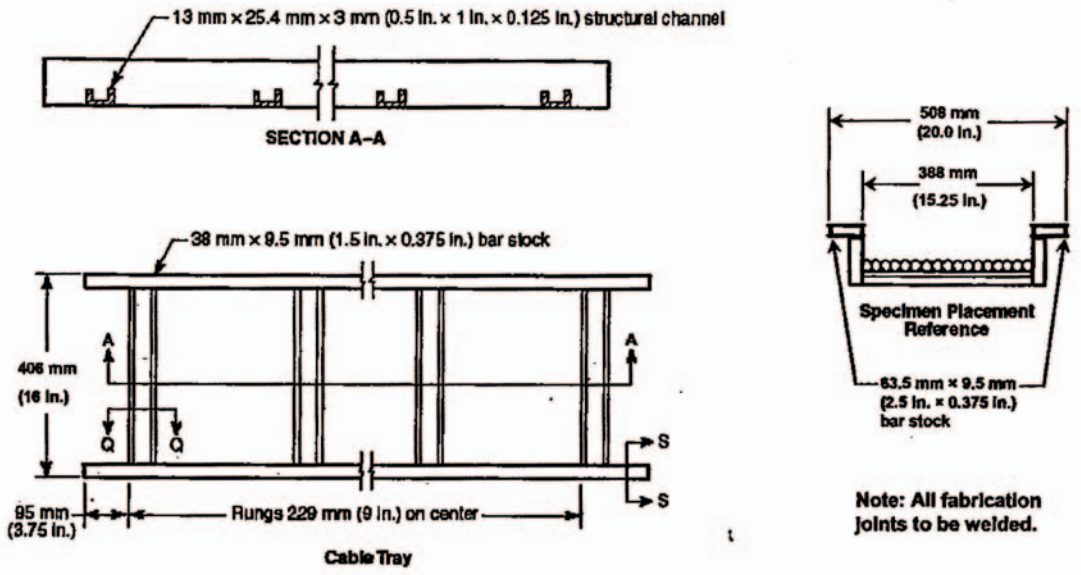

Figure B-11 Details of Ladder Cable Tray and Supports. Tolerances are ± 1.5 mm (± 0.125 in.)

D.7.3 The difficulty of defining materials that contribute little or no fuel to a fire has in the past led to the use of ASTM E 84/NFPA 255 to provide information about the combustibility of materials. ASTM Committee E-5 and the NFPA Technical Committee on Fire Tests do not and have not ever recommended that the results of these tests alone be used to describe material combustibility.

D.7.4 Composite assemblies or panels that use metal or mineral facings and combustible interior cores, and that remain essentially impermeable to flame throughout the test, might not be completely evaluated for surface burning behavior by this method, since the interior cores are not fully challenged.

D.7.5 ~~Some materials require support to remain in place during the test, such as loose-fill insulation supported by a metal screen. The supporting screen tends to produce low flame-spread indexes relative to those obtained for materials that are not so supported. Conversely, materials that are supported on rods, such as batt insulation, can produce higher FSIs if retained on the ceiling rather than allowed to burn on the floor.~~

~~D.7.6 Some materials, such as composites, can delaminate during the test. Delamination can cause two possible responses: The material can expose two or more surfaces to the flame, increasing the FSI, or the material can sag or one end can drop into the fire chamber, impeding further flame spread.~~

~~D.7.7 Some materials, such as cellular plastics and thermoplastic and thermosetting materials, can be difficult to evaluate. Thermoplastic and thermosetting materials that are not mechanically fastened often fall to the floor of the tunnel and usually produce relatively low FSI. If supported on wire screen, rods, or other supports, these materials can become completely engulfed in flame, thereby creating a questionable comparison between the surface flame spread of nominal 1-in. (25.4-mm) thick red oak and the burning rate of these materials. Where the entire specimen is consumed, as opposed to the surface burning of red oak, much more oxygen is used and higher smoke developed indexes are usually obtained for these materials.~~

~~D.7.8 The materials described in this section, (i.e., those that drip, melt, delaminate, draw away from the fire, or need artificial support) present unique problems and necessitate careful interpretation of the test results. Some of these materials that are assigned a low FSI based on this test method can exhibit an increasing propensity for generating flameover conditions during room fire tests with increasing area of material exposure and increasing intensity of fire exposure. The result, therefore, might not be indicative of their performance if evaluated under large-scale test procedures. Alternative means of testing might be necessary to fully evaluate some of these materials.~~

~~D.7.9~~ To provide needed technical data, flammability evaluations of cellular plastics for building construction using the Steiner Tunnel began with the testing and classification of a flame-retardant formulation of polystyrene foam board in 1960, with subsequent evaluation of polyurethane-type boards incorporating flame-retardant resin systems (first generation) beginning in 1964, polymerically and chemically modified ~~flame-retardant~~ flame retarded polyurethane-type formulations (second generation) in 1965, polyisocyanurate-type foams initiated in 1968, and, most recently, urea-formaldehyde-type, cavity-fill foams. Spray-applied and poured-in-place cellular foam systems were first subjected to the test in 1968 and 1972, respectively.

~~D.7.10~~ D.7.6 From 1960 through 1973, over 2000 tunnel tests have been conducted on ~~flame-retardant~~ flame retarded and general-purpose polystyrene, polyurethane, polyisocyanurate and urea-formaldehyde cellular plastics, in board-stock, spray-applied or poured-in-place forms, yielding flame-spread flame spread index values ranging from less than 5 to over 2000. (Reference 7)

~~D.7.11~~ D.7.7 ~~The flame-spread index of some materials varies depending on environmental conditions. The prescribed limits on the temperature and relative humidity for specimen conditioning and tunnel air supply [both 73.4°F ± 5°F (23°C ± 2.8°C), 50 percent rh ± 5 percent rh] were selected to minimize these effects.~~ Information on some critical limitations for other materials are found in the scope and in section A.1.1.7.

Substantiation: This proposal simply makes a few language corrections and coordinates with the new chapter 6 and the new section A.1.1.7.

Committee Meeting Action: Accept in Principle in Part

1. Accept the submitter's proposed revision to section D.7.2 so that the revised section reads as follows:

"D.7.2 Through adaptation (see Chapter 6), the procedure was expanded to include the evaluation of composites and assemblies. Chapter 6 describes the mounting methods to be used for the following types of products: acoustical and similar panel products of less than 20 in. (508 mm); adhesives; batt and blanket-type insulating materials; coating materials, cementitious mixtures, and sprayed fibers; loose fill insulation; ~~pipe and~~ duct insulation materials and systems; thin membranes, vinyl and paper wall covering materials and plastics. Special mounting methods should be used for other materials, suitable as a reasonable representation of the field use of the material.

2. Do not accept the submitter's proposed changes to sections D.7.5, D.7.6, D.7.7, D.7.8, D.7.11.

3. Accept the submitter's proposed changes to section D.7.9.

4. Accept the submitter's proposed changed to section D.7.10 which calls for replacing "flame retardant" with "flame retarded", but do not accept the submitter's proposed change to add the phrase "flame spread index".

Committee Statement: 1. The Committee does not believe that pipe insulation falls within the scope of NFPA 255. Also, see Committee Action and Statement for Proposal 255-18 (Log #14)

2. The submitter's proposed deletion of sections D.7.5, D.7.6, D.7.7, D.7.8, D.7.11 as the information from these sections was proposed to be moved to annex A by proposal 255-3 (Log #5). However, proposal 255-3 (Log #5) was not accepted by the Committee and the Committee believes that sections D.7.5, D.7.6, D.7.7, D.7.8, D.7.11 should be retained.

3. Editorial.

4. Editorial.

Number Eligible to Vote: 23

Ballot Results: Affirmative: 14 Negative: 6

Ballot Not Returned: 3 GRIFFITH, WESSEL, WILLS

Explanation of Negative:

BEITEL: This proposal addresses in Appendix D, the move of the mounting methods appendix into the standard. See my Explanation of Negative on 255-17 (Log #1). Also, it appears that the final section of the Committee Meeting Action is incomplete. Appears that a part of 4 is missing and anything after that.

GANDHI: See My Explanation of Negative on 255-17 (Log #1).

KOFFEL: See my Explanation of Negative on 255-17 (Log #1).

MCPHEE: I concur with Mr. Beitel and Mr. Thornberry.

SUMATHIPALA: I concur with Mr. Beitel and Mr. Thornberry.

THORNBERRY: I must vote negative on this proposal since I have voted negative on 255-17 (Log #1) as noted above. If this proposal is rejected, then the status quo is maintained in Annex D which references Annex B which contains the mounting methods proposed to be relocated from Annex D to new Chapter 6 by 255-17 (Log #1).

Comment on Affirmative

HIRSCHLER: See my comment on Proposal 255-17 (Log #1).

255-21 Log# 9 FIZ-AAA **Final Action: Accept in Principle in Part (D.8)**

Submitter : Marcelo M. Hirschler , GBH International

Recommendation: Revise text to read as follows:

D.8 Correlation with Other Fire Conditions. Several studies have examined the relationship of the ~~FSI~~ flame spread index test results on materials to the performance of the same materials in large-scale fire growth experiments and in other laboratory test methods. Some comparisons with large-scale experiments are provided in the notes to this appendix. Comparisons also have been made between the ASTM E 84/NFPA 255 test and other tests, including ; ASTM E 162, Standard Test Method for Surface Flammability of Materials Using a Radiant Heat Energy Source and some discontinued tests. ~~, ASTM E 286, Test Method for Surface Flammability of Building Materials Using an 8-ft (2.44-m) Tunnel Furnace, the 2-ft tunnel test, the "corner test," and other tests.~~ In general, results from this test method do not always correlate with those of large-scale fire growth experiments, but it has been shown that the test is a suitable indicator of low tendencies in flame spread and smoke development for materials that are self-supporting or that can be adequately represented by test samples.

Substantiation: ASTM E 286 has been discontinued and no equipment of that kind exists, as has the 2 ft tunnel test (which never became a standard and for which no test equipment exists now). The added wording would provide more useful guidance than does the existing wording, which gives the misleading impression that the test method correlates with a number of other test methods.

Committee Meeting Action: Accept in Principle in Part

Accept the submitter's proposed text with the following modifications.

"D.8 Correlation with Other Fire Conditions. Several studies have examined the relationship of the flame spread index test results on materials to the performance of the same materials in large-scale fire growth experiments and in other laboratory test methods. Some comparisons with large-scale experiments are provided in the notes to this appendix. Comparisons also have been made between the NFPA 255 / ASTM E 84 / UL 273 test and other tests, including ; ASTM E 162, Standard Test Method for Surface Flammability of Materials Using a Radiant Heat Energy Source and some discontinued tests. ~~In general, results from this test method do not always correlate with those of large-scale fire growth experiments, but it has been shown that the test is a suitable indicator of low tendencies in flame spread and smoke development for materials that are self-supporting or that can be adequately represented by test samples.~~

Committee Statement: Reference to UL 273 was added for completeness. Insufficient technical substantiation was provided supporting the last sentence proposed by the submitter.

Number Eligible to Vote: 23

Ballot Results: Affirmative: 20

Ballot Not Returned: 3 GRIFFITH, WESSEL, WILLS

Comment on Affirmative

HIRSCHLER: The Technical Committee should not have eliminated the added sentence "In general, results from this test method do not always correlate with those of large-scale fire growth experiments, but it has been shown that the test is a suitable indicator of low tendencies in flame spread and smoke development for materials that are self-supporting or that can be adequately represented by test samples." This sentence points out that the results of the test method very often do not correlate with those of large scale fire growth experiments (such as room-corner tests, e.g. NFPA 265 or NFPA 286), and this has been demonstrated in many research papers. The problem of testing non

self-supporting materials and of testing very thin specimens has been shown in many papers, including work by (Belles and Williamson Belles, D. W., Fisher, F.L. and Williamson, R. B., "How well does the ASTM E84 predict fire performance of textile wallcoverings?" Fire J., 82(1), pp. 24-30, 74 (1998)). The references included in the notes are all ancient work and should be updated.

NFPA 255

Standard Method of Test of

Surface Burning Characteristics of Building Materials

2005 Edition

IMPORTANT NOTE: This NFPA document is made available for use subject to important notices and legal disclaimers. These notices and disclaimers appear in all publications containing this document and may be found under the heading "Important Notices and Disclaimers Concerning NFPA Documents." They can also be obtained on request from NFPA or viewed at www.nfpa.org/ disclaimers.

NOTICE: An asterisk (*) following the number or letter designating a paragraph indicates that explanatory material on the paragraph can be found in Annex A.

Information on referenced publications can be found in Chapter 2 and Annex D.

Chapter 1 Administration

1.1 Scope. This method of testing surface burning characteristics of building materials is applicable to any type of building material that, by its own structural quality or the manner in which it is applied, is capable of supporting itself in position or is supported in the test furnace to a thickness comparable to its recommended use.

1.2 Purpose.

1.2.1 The purpose of the test is to determine the comparative surface burning characteristics of the material under test by evaluating the flame spread over its surface and the resulting smoke when exposed to a test fire, thus establishing a basis on which surface burning characteristics of different materials can be compared without specific consideration of all end-use parameters that could affect the surface burning characteristics. **(ROP 255-4)**

1.2.2* In this test method, flame spread and smoke information is recorded and used to assess a flame spread index and a smoke developed index. **(ROP 255-4)**

1.3 Application.

1.3.1 It is the intent of this method of test to register performance during the period of exposure, not to determine suitability for use after the test exposure.

1.3.2 This method does not establish ratings of standards of performance for specific uses, because these ratings depend on service requirements.

1.4 Units. The values stated in U.S. customary units are to be regarded as the standard. **(ROP 255-5)**

Chapter 2 Referenced Publications

2.1 General. The documents or portions thereof listed in this chapter are referenced within this standard and shall be considered part of the requirements of this document.

2.2 NFPA Publications. (Reserved)

2.3 Other Publications.

2.3.1 ASTM Publications. American Society for Testing and Materials, 100 Barr Harbor Drive, West Conshohocken, PA 19428-2959.

ASTM A 390, *Standard Specification for Zinc-Coated (Galvanized) Steel Poultry Fence Fabric (Hexagonal and Straight Line)*, 2001.

ASTM C36/C36M, *Standard Specification for Gypsum Wallboard*, 2003.

ASTM C 1186, *Standard Specification for Flat Non-Asbestos Fiber-Cement Sheets*, 2002.

ASTM D 4442, *Standard Test Methods for Direct Moisture Content Measurement of Wood and Wood-Base Materials*, 2003.

ASTM D 4444, *Standard Test Methods for Use and Calibration of Hand-Held Moisture Meters*, 2003.

ASTM E 136, *Standard Test Method for Behavior of Materials in a Vertical Tube Furnace at 750°C*, 1999.

ASTM E 2231, *Standard Practice for Specimen Preparation and Mounting of Pipe and Duct Insulation Mateials to Assess Surface Burning Characteristics*, 2002.

2.3.2 ULC Publication. Underwriters' Laboratories of Canada, 7 Underwriters Road, Toronto, Ontario M1R 3B4, Canada.

ULC S10 2.2, *Standard Method of Test for Surface Burning Characteristics of Flooring, Floor Covering and Miscellaneous Materials and Assemblies*, 2003.

Chapter 3 Definitions

3.1 General. The definitions contained in this chapter shall apply to the terms used in this standard. Where terms are not included, common usage of the terms shall apply.

3.2 NFPA Official Definitions.

3.2.1 Shall. Indicates a mandatory requirement.

3.2.2 Should. Indicates a recommendation or that which is advised but not required.

3.2.3 Standard. A document, the main text of which contains only mandatory provisions using the word "shall" to indicate requirements and which is in a form generally suitable for mandatory reference by another standard or code or for adoption into law. Nonmandatory provisions shall be located in an appendix or annex, footnote, or fine-print note and are not to be considered a part of the requirements of a standard.

3.3 General Definitions.

3.3.1 Flame Spread Index. A comparative measure derived from visual measurements of the spread of flame versus time for a material tested in accordance with NFPA 255. **(ROP 255-9)**

3.3.2 Smoke Developed Index. A comparative measure derived from measurements of smoke obscuration versus time for a material tested in accordance with NFPA 255. **(ROP 255-9)**

Chapter 4 Test Equipment and Specimens

4.1 Fire Test Chamber.

4.1.1* The fire test chamber, as shown in Figure 4.1.1(a) and Figure 4.1.1(b), shall consist of the following:

(1) Horizontal duct having an inside width of $17\frac{3}{4}$ in. ± $\frac{1}{4}$ in. (451 mm ± 6.3 mm), measured at the ledge location alongside walls, and $17\frac{5}{8}$ in. ± $\frac{3}{8}$ in. (448 mm ± 9.5 mm) at all other points

(2) Depth of 12 in. ± $\frac{1}{2}$ in. (305 mm ± 12.7 mm), measured from the bottom of the test chamber to the ledge of the inner walls on which the specimen is supported, including the $\frac{1}{8}$ in. (3.1 mm) thickness of woven fiberglass gasketing tape

(3) Length of 25 ft (7.62 m)

FIGURE 4.1.1(a) Fire Test Chamber. [Existing Figure 2.1.1(a), 2000 ed., (no change)]

FIGURE 4.1.1(b) Side View of Fire Test Chamber. [Existing Figure 2.1.1(b), 2000 ed., (no change)]

4.1.1.1 The sides and base of the duct shall be lined with insulating masonry, consisting of A. P. Green G-26 refractory fire brick or equivalent, as illustrated by Figure 4.1.1(b).

4.1.1.2 One side of the duct shall be provided with double-pane observation windows with the inside pane flush mounted as illustrated in Figure 4.1.1(b).

4.1.1.3 Exposed inside glass shall be $2\frac{3}{4}$ in. ± $\frac{3}{8}$ in. × 11 in. + 1in./–2 in. (70 mm ± 9.5 mm × 279 mm +25.4 mm/–51 mm).

4.1.1.4 The centerline of the exposed area of the inside glass shall be in the upper half of the furnace wall, with the upper edge not less than 2.5 in. (61.9 mm) below the furnace ledge.

4.1.1.5 The window shall be located so that not less than 12 in. (305 mm) of the specimen width can be observed.

4.1.1.6 Multiple windows shall be located along the tunnel so that the entire length of the test sample is able to be observed from outside the fire chamber.

4.1.1.7 The windows shall be pressuretight as described in 4.3.2.

4.1.2* The ledges of the tunnel shall meet the following criteria:

(1) They shall be fabricated of structural materials capable of withstanding the abuse of continuous testing.

(2) They shall be level with respect to the length and width of the chamber and each other.

(3) They shall be maintained in a state of repair at all times that is commensurate with the frequency, volume, and degree of testing.

4.1.3* Baffles shall be provided by positioning six A. P. Green G-26 refractory fire bricks or equivalent [long dimension vertical, $4\frac{1}{2}$ in. (114 mm) dimension along the wall] along the side walls of the chamber as follows:

(1) Distances of 7 ft, 12 ft, and 20 ft ± 6 in. (2.1 m, 3.7 m, and 6.1 m ± 0.02 m) on the window side

(2) Distances of $4\frac{1}{2}$ ft, $9\frac{1}{2}$ ft, and 16 ft ± 6 in. (1.4 m, 2.9 m, and 4.9 m ± 0.02 m) on the opposite side

4.1.4* Tunnel Lid. The top lid shall consist of a removable noncombustible (metal and mineral composite) structure, insulated with nominal 2 in. (51 mm) thick mineral composition material as shown in Figure 4.1.1(b), and shall be of a size necessary to cover the fire test chamber and the test samples completely.

4.1.4.1 The lid shall be maintained in an unwarped and flat condition.

4.1.4.2 The mineral composition material shall have physical characteristics comparable to the following:

(1) Maximum effective temperature of 1200°F (649°C)

(2) Bulk density (ρ) of 21 lb/ft^3 (336 kg/m^3)

(3) Thermal conductivity (k) ranging from 0.50 Btu·in./hr·ft$^{2,\circ}$F to 0.71 Btu·in./hr·ft$^{2,\circ}$F (0.87 W/m·K to 1.23 W/m·K)

DRAFT

(4)* Thermal inertia (kρC) ranging from

$$1 \text{ to } 4 \ \frac{(\text{Btu}^2 \bullet \text{in.})}{\text{ft}^5 \bullet \text{h} \bullet \text{F}^2}\left(1\times10^4 \text{to } 4\times10^4 \ \frac{\text{W}^2 \bullet \text{S}}{\text{m}^4 \bullet \text{K}^2}\right)$$

4.1.4.3 The entire lid assembly shall be protected with flat sections of high-density [nominal 110 lb/ft^3 (1762 kg/m^3)] $^1/_4$ in. (6.3 mm) reinforced cement board, complying with ASTM C 1186 and passing ASTM E 136, maintained in an unwarped and uncracked condition through continued replacement. **(ROP 255-6)**

4.1.4.3.1 The protective board shall be permitted to be either secured or not secured to the furnace lid.

4.1.4.3.2 When in place, the top lid shall be sealed completely against the leakage of air into the fire test chamber during the test.

4.1.5 One end of the test chamber, designated as the fire end, shall be provided with two gas burners delivering flames upward against the surface of the test sample.

4.1.5.1 The burners shall be spaced 12 in. (305 mm) from the fire end of the test chamber and 7 in. ± $^1/_2$ in. (178 mm ± 12.7 mm) below the undersurface of the test sample.

4.1.5.2 The air intake shutter shall be located 54 in. ± 5 in. (1372 mm ± 127 mm) upstream of the burner, as measured from the burner centerline to the outside surface of the shutter.

4.1.5.3 Gas to the burners shall be provided through a single inlet pipe, distributed to each port burner through a tee section.

4.1.5.4 The outlet shall be a $^3/_4$ in. (19 mm) elbow.

4.1.5.5 The plane of the port shall be parallel to the furnace floor so that the gas is directed up toward the specimen.

4.1.5.6 Each port shall be positioned with its centerline 4 in. ± $^1/_2$ in. (102.0 mm ± 12.7 mm) from each side of the centerline of the furnace so that the flame is evenly distributed over the width of the exposed specimen surface *[see Figure 4.1.1(b)]*.

4.1.5.7 The controls used to ensure a constant flow of gas to the burners during the period of use shall consist of the following:

(1) Pressure regulator
(2) Gas meter calibrated to read in increments of not more than 0.1 ft^3 (2.8 L)
(3) Manometer to indicate gas pressure in inches of water
(4) Quick-acting gas shutoff valve
(5) Gas metering valve
(6) Orifice plate in combination with a water manometer to assist in maintaining uniform gasflow conditions

4.1.5.8 An air intake fitted with a vertically sliding shutter extending the entire width of the test chamber shall be provided at the fire end.

4.1.5.9 The sliding shutter shall be positioned to provide an air inlet port 3 in. ± $^1/_{16}$ in. (76 mm ± 1.6 mm) high, measured from the floor level of the test chamber, at the air intake point.

4.1.6 The other end of the test chamber, designated as the vent end, shall be fitted with a gradual rectangular-to-round transition piece of not less than 20 in. (508 mm) in length and having a cross-sectional area of 200 in.^{2} (129,000 mm^2) at any point.

4.1.6.1 The transition piece shall, in turn, be fitted to a flue pipe 16 in. (406 mm) in diameter.

4.1.6.2 The movement of air shall be achieved by an induced draft system having a total draft capacity of at least 0.15 in. (3.8 mm) water column under the following conditions:

(1) The sample shall be in place.
(2) The shutter at the fire end shall be open to the normal 3 in. ± $^1/_{16}$ in. (76 mm ± 1.6 mm).
(3) The damper shall be in the fully open position.

4.1.6.3 A draft gauge to indicate static pressure shall be inserted through the top at the midwidth of the tunnel, 1 in. ± $^1/_2$ in. (25.4 mm ± 12.7 mm) below the ceiling, and 15 in. ± $^1/_2$ in. (381 mm ± 12.7 mm) downstream from the inlet shutter.

4.1.7* A photometric system consisting of a light source and photocell shall be mounted on a horizontal section of the 16 in. (406 mm) diameter vent pipe *(see 4.1.6.1)* at a point where it is preceded by a straight run of pipe [at least 12 diameters or 16 ft (4.88 m) and not more than 30 diameters or 40 ft (12.2 m)] from the vent end of the chamber, and with the light beam directed upward along the vertical axis of the vent pipe.

4.1.7.1 The vent pipe shall be insulated with at least 2 in. (51 mm) of high-temperature mineral composition material from the vent end of the chamber to the photometer location.

4.1.7.2 A photoelectric cell with an output that is directly proportional to the amount of light received shall be mounted over the light source and connected to a recording device having a minimum operating chart width of 5 in. (127 mm), with an accuracy within ±1 percent of full scale for the purpose of indicating changes in the attenuation of incident light caused by the passing smoke, particulate, and other effluent.

4.1.7.3 The distance between the light source lens and the photocell lens shall be 36 in. ± 4 in. (914 mm ± 102 mm).

4.1.7.4 The cylindrical light beam shall pass through 3 in. (76 mm) diameter openings at the top and bottom of the 16 in. (406 mm) diameter openings at the top and bottom of the 16 in. (406 mm) diameter duct with the resultant light beam centered on the photocell.

4.1.8 The linearity of the photometer system shall be verified periodically by interrupting the light beam with calibrated neutral density filters.

4.1.8.1 The density filters shall cover the full range of the recording instrument.

4.1.8.2 Transmittance values measured by the photometer, using neutral density filters, shall be within ±3 percent of the calibrated value for each filter.

4.1.9 An automatically controlled damper provided with a manual override shall be installed in the vent pipe downstream of the smoke-indicating attachment to regulate the draft pressure.

4.1.10 Other manual, automatic, or combination manual and automatic draft regulation devices shall be permitted to be incorporated to maintain fan characterization and airflow control throughout test periods.

4.1.11 An 18 AWG (1.02 mm) thermocouple with $^3/_8$ in. ± $^1/_8$ in. (9.5 mm ± 3.1 mm) of the junction exposed in the air shall be inserted through the floor of the test chamber so that the tip is 1 in. ± $^1/_{32}$ in. (25.4 mm ± 0.8 mm) below the top surface of the woven fiberglass gasketing tape and 23 ft ± $^1/_2$ in. (7.0 m ± 12.7 mm) from the centerline of the burner ports at the center of the burner width.

4.1.12 An 18 AWG (1.02 mm) thermocouple embedded $^1/_8$ in. (3.1 mm) below the floor surface of the test chamber shall be mounted in refractory or portland cement, carefully dried to avoid cracking, at distances of 13 ft ± $^1/_2$ in. (3.96 m ± 12.7 mm) and 23$^1/_4$ ft ± $^1/_2$ in. (7.09 m ± 12.7 mm) from the centerline of the burner ports.

4.1.13 The room in which the test chamber is located shall have provision for a free inflow of air during the test to maintain the room at atmospheric pressure during the entire test run.

4.2 Test Specimens.

4.2.1 The test specimen shall be at least 2 in. (51 mm) wider [nominally 20$^1/_4$ in. ± $^3/_4$ in. (514 mm ± 19 mm)] than the interior width of the tunnel and a total of 24 ft ± $^1/_2$ in. (7.32 m ± 12.7 mm) in length.

4.2.1.1 The specimen shall be permitted to be one, continuous, unbroken length or to consist of sections joined end to end.

4.2.1.2 A 14 in. ± $^1/_8$ in. (356 mm ± 3.1 mm) length of uncoated 16 gauge (0.053 in. to 0.060 in.) steel sheet shall be placed on the specimen mounting ledge in front of and under the specimen in the upstream end of the tunnel.

4.2.1.3 The specimen shall be representative of the material for which test results are desired.

4.2.2 The test specimen shall be conditioned to a constant weight at a temperature of 73.4°F ± 5°F (23°C ± 2.8°C) and at a relative humidity of 50 percent ± 5 percent.

4.3 Calibration of Test Equipment.

4.3.1 A $^1/_4$ in. (6.3 mm) reinforced cement board shall be placed on the ledge of the furnace chamber, and the removable lid of the test chamber then shall be placed in position. **(ROP 255-6)**

4.3.2 With the $^1/_4$ in. (6.3 mm) reinforced cement board in position on top of the ledge of the furnace chamber, and with the removable lid in place, a draft shall be established to produce a 0.15 in. (3.8 mm) water column reading on the draft manometer, with the fire end shutter open 3 in. ± $^1/_{16}$ in. (76 mm ± 1.6 mm), by manually setting the damper in relationship to the fan performance. **(ROP 255-6)**

4.3.2.1 Once a draft has been established as indicated in 4.3.2, the fire end shutter shall be closed and sealed without changing the damper position.

4.3.2.2* The manometer water column reading shall be verified to have increased to at least 0.375 in. (9.53 mm) prior to continuing with the test.

4.3.3 In addition to the test specified in 4.3.2, a supplemental leakage test shall be conducted periodically by sealing the fire shutter and exhaust duct beyond the differential manometer tube and placing a smoke bomb in the chamber.

4.3.3.1 The smoke bomb shall be ignited and the chamber pressurized to 0.375 in. ± 0.135 in. (9.53 mm ± 3.43 mm) water column.

4.3.3.2 All points of leakage observed in the form of escaping smoke particles shall be sealed.

4.3.3.3 A draft reading within the range of 0.055 in. to 0.085 in. (1.40 mm to 2.16 mm) water column shall be established.

4.3.3.4 The draft gauge reading required in 4.3.3.3 shall be maintained throughout the test by the automatically controlled damper.

4.3.4* Supplemental Leakage Test. The air velocity shall be recorded at seven points located 23 ft (7.0 m) from the centerline of the burner ports and 6 in. ± $^1/_4$ in. (152 mm ± 6.3 mm) below the plane of the specimen mounting ledge.

DRAFT

4.3.4.1 The seven points specified in 4.3.4 shall be determined by dividing the width of the tunnel into seven equal sections and recording the velocity at the geometric center of each section.

4.3.4.2 During the measurement of velocity, the bricks as specified in 4.1.3 and the exposed thermocouple located at 23 ft (7.0 m) shall be removed and 24 in. (610 mm) long straightening vanes shall be placed 16 ft to 18 ft (4.88 m to 5.49 m) from the burner.

4.3.4.3 The straightening vanes shall divide the furnace cross section into nine uniform sections.

4.3.4.4 The velocity shall be determined with the furnace air temperature at 73.4°F ± 5°F (23°C ± 2.8°C) using a velocity transducer.

4.3.4.5 It shall be verified that the velocity, determined as the arithmetic average of the seven readings, is 240 ft/min ± 5 ft/min (73.2 m/min ± 1.5 m/min) prior to continuing with the test.

4.3.5 The air supply shall be maintained at 73.4°F ± 5°F (23°C ± 2.8°C) and the relative humidity at 50 percent ± 5 percent.

4.3.6 The fire test chamber shall be supplied with natural (municipal) or methane (bottled) gas fuel of uniform quality with a heating value of nominally 1000 Btu/ft^3 (37.3 mJ/m^3).

4.3.6.1 The gas supply shall be adjusted initially at approximately 5000 Btu/min (5.3 mJ/min).

4.3.6.2 The gas pressure, the pressure differential across the orifice plate, and the volume of gas used in each test shall be recorded.

4.3.6.3 Unless otherwise corrected for, where bottled methane is used, a length of coiled copper tubing shall be inserted into the gas line between the supply and metering connection to compensate for possible errors in the indicated flow due to reductions in gas temperature associated with the pressure drop and expansion across the regulator.

4.3.6.4 With the draft and gas supply adjusted as indicated in 4.3.3 and 4.3.6.1, the test flame shall extend downstream to a distance of 4$^1/_2$ ft (1.37 m) over the specimen surface with negligible upstream coverage.

4.3.7 Preheating. The test chamber shall be preheated with the $^1/_4$ in. (6.3 mm) reinforced cement board *(see 4.3.1)* and the removable lid in place and with the fuel supply adjusted to the required flow. **(ROP 255-6)**

4.3.7.1 The preheating shall be continued until the temperature indicated by the floor thermocouple at 23$^1/_4$ ft (7.09 m) reaches 150°F ± 5°F (66°C ± 2.8°C).

4.3.7.2* During the preheat test, the temperatures indicated by the thermocouple at the vent end of the test chamber shall be recorded at intervals not longer than 15 seconds, and these readings shall be compared to the preheat temperature shown in the temperature–time curve in Figure 4.3.7.2.

FIGURE 4.3.7.2 Temperature–Time Chart for Preheat Temperature. [Existing Figure 2.3.7, 2000 ed., (no change)]

4.3.7.3 If appreciable variation from the temperature shown in the representative preheat curve is observed, it shall be necessary to conduct new red oak calibration tests and adjust the fuel supply.

4.3.8 The next specimen shall not be placed into position for testing until the floor thermocouple at 13 ft (3.96 m) indicates a temperature of 105°F ± 5°F (40.5°C ± 2.8°C).

4.3.9 With the test equipment adjusted and conditioned as described in 4.3.2 through 4.3.8, a test or series of tests shall be made using nominal $^{25}/_{32}$ in. (19.8 mm) select grade red oak flooring as a specimen that has been conditioned to 6 percent to 8 percent moisture content as determined by the procedure described in 2.3.10. **(ROP 255-8)**

4.3.9.1 Observations shall be made at maximum distance intervals of 2 ft (0.61 m) and maximum time intervals of 30 seconds, and the time at which the flame reaches the end of the specimen that is 19$^1/_2$ ft (5.94 m) from the end of the ignition fire shall be recorded.

4.3.9.2 The end of the ignition fire shall be considered to be 4$^1/_2$ ft (1.37 m) from the burners.

4.3.9.3 The flame shall reach the end point in 5$^1/_2$ minutes ± 15 seconds.

4.3.9.4 The temperatures measured by the thermocouple near the vent end shall be recorded at least every 15 seconds.

4.3.9.5 The photoelectric cell output shall be recorded immediately prior to the test and at least every 15 seconds during the test.

4.3.9.6 The flame shall be permitted to be considered as having reached the end point when the vent end thermocouple registers a temperature of 980°F (527°C).

4.3.10 Conditioning of Red Oak.

4.3.10.1 Using either a conductance or dielectric type meter calibrated per ASTM D 4444, *Standard Test Methods for Use and Calibration of Hand-Held Moisture Meters*, the moisture content of the select grade red oak flooring shall be monitored until the desired level is reached. **(ROP 255-8)**

4.3.10.2 Only the trimmed sections shall be subjected to the secondary oven-drying method (Method B) in ASTM D 4442, *Standard Test Methods for Direct Moisture Content Measurement of Wood and Wood-Base Materials*, for the final determination of moisture content. **(ROP 255-8)**

4.3.11 Calibration of Red Oak. (ROP 255-8)

4.3.11.1 The flame spread distance, temperature, and change in photoelectric cell readings shall be plotted separately as shown in Figure 4.3.11.1(a), Figure 4.3.11.1(b), and Figure 4.3.11.1(c), which reflect representative curves for red oak temperature–time, absorption–time smoke density, and distance–time flame spread, respectively.

FIGURE 4.3.11.1(a) Temperature–Time Curve for Red Oak. [Existing Figure 2.3.10(a), 2000 ed., (no change)]

FIGURE 4.3.11.1(b) Absorption–Time Curve for Smoke Density of Red Oak. [Existing Figure 2.3.10(b), 2000 ed., (no change)]

FIGURE 4.3.11.1(c) Distance–Time Curve for Flame Spread of Red Oak. [Existing Figure 2.3.10(c), 2000 ed., (no change)]

4.3.11.2 Flame spread shall be determined from the observed distance less 4$^1/_2$ ft (1.37 m).

4.3.11.3 The results shall represent a flame spread index and smoke developed index of 100 using the calculation method in Section 5.3.

4.3.12 Calibration of Cement Board. (ROP 255-8) Following the calibration tests for red oak, a similar test or series of tests shall be conducted on samples of $^1/_4$ in. (6.3 mm) reinforced cement board complying with ASTM C 1186 and passing ASTM E 136. **(ROP 255-6)**

4.3.12.1 The results of the test(s) specified in 4.3.12 shall represent a flame spread index and a smoke developed index of zero (0) using the calculation method in Section 5.3. **(ROP 255-6)**

4.3.12.2 The temperature readings shall be plotted separately, as shown in Figure 4.3.12.2, which reflects a representative curve for temperature–time development for reinforced cement board. **(ROP 255-6)**

FIGURE 4.3.12.2 Temperature–Time Curve for Reinforced Cement Board. (ROP 255-6) [Existing Figure 2.3.11, 2000 ed., (no change)]

Chapter 5 Conduct of Tests

5.1 Test Procedure.

5.1.1 With the furnace draft operating, the test specimen shall be placed on the test chamber ledges that have been completely covered with nominal $^1/_8$ in. (3.1 mm) thick × 1$^1/_2$ in. (38.1 mm) wide woven fiberglass tape.

5.1.1.1 The specimen shall be positioned as quickly as is practicable.

5.1.1.2 The removable lid shall be placed in position over the specimen.

5.1.2 The completely mounted specimen shall remain in position in the chamber with the furnace draft operating for 120 seconds ± 15 seconds prior to the application of the test flame.

5.1.3 The burner gas shall be ignited.

5.1.3.1 The distance and time of maximum flame front travel shall be observed and recorded with the room darkened.

5.1.3.2 The test shall continue for 10 minutes unless all the following conditions occur, in which case the test shall be permitted to be terminated prior to 10 minutes:

(1) The specimen is completely consumed in the fire area.
(2) No further progressive burning is evident.
(3) The photoelectric cell reading has returned to the baseline. **(ROP 255-11)**

(ROP 255-12)

5.1.4 The photoelectric cell output shall be recorded immediately prior to the test and at least every 15 seconds during the test.

5.1.5 The gas pressure, the pressure differential across the orifice plate, and the volume of gas used for each test shall be recorded.

5.1.6 When the test is completed, the gas supply shall be shut off, observations shall be made regarding smoldering or other conditions within the test duct, and the specimen shall be removed for further examination. **(ROP 255-11)**

5.1.7 The flame spread distance, temperature, and change in photoelectric cell readings shall be plotted separately on the same type of coordinate paper used in 4.3.11 in order to determine the flame spread index and smoke developed index values as development classifications outlined in Section 5.3. **(ROP 255-11)**

5.1.7.1 The flame spread observations specified in 5.1.7 shall be recorded at maximum distance intervals of 2 ft (0.61 m) or maximum time intervals of 30 seconds.

5.1.7.2 In addition to the requirements of 5.1.7.1, the peak and its time of occurrence shall be recorded.

5.1.7.3 Flame spread shall be determined from the observed distance less 4$^1/_2$ ft (1.37 m).

DRAFT

5.2 Analysis of Products of Combustion. Although not required as a part of this method, products of combustion shall be permitted to be drawn from the test duct for chemical analysis during the test.

5.3 Flame Spread Index and Smoke Developed Index. The flame spread index shall be determined as specified in 5.3.1 through 5.3.4. **(ROP 255-11)**

5.3.1* The total area, A_T, under the flame spread distance–time curve shall be determined by ignoring any flame front recession.

5.3.2 If the total area, A_T, is less than or equal to 97.5 min-ft (29.7 min-m), the flame spread index (*FSI*) equals 0.515 times the total area ($FSI = 0.515\ A_T$). **(ROP 255-11)**

5.3.3 If the total area, A_T, is greater than 97.5 min-ft (29.7 min-m), the flame spread index equals 4900 divided by the difference between 195 and the total area, A_T [$FSI = 4900/(195 - A_T)$]. **(ROP 255-11)**

5.3.4 Smoke Developed Index. The test results for smoke shall be plotted using the coordinates in Figure 4.3.11.1(a), Figure 4.3.11.1(b), and Figure 4.3.11.1(c). **(ROP 255-11)**

5.3.4.1 The area under the curve shall be divided by the area under the curve for red oak and multiplied by 100 to establish a numerical smoke developed index by which the performance of the material can be compared with that of reinforced cement board, complying with ASTM C 1186 and passing ASTM E 136, and select grade red oak flooring, which have been arbitrarily established as 0 and 100, respectively. **(ROP 255-11)**

5.3.4.2 Allowance shall be permitted to be made for accumulation of soot and dust on the photoelectric cell during the test by establishing a revised baseline.

5.3.4.3 The revised baseline shall be a straight line drawn from the zero (0) point (point on baseline where incipient light attenuation occurs) to the point established after the sample has been removed.

5.4 Report. The report shall include all of the following information:

(1) Description of the material being tested

(2) Information on the thickness of the test specimen and information provided by the test sponsor on the composition of the test specimen to identify its materials or ingredients or both **(ROP 255-13)**

(3) Information on whether the material was tested as a continuous or sectioned specimen **(ROP 255-13)**

(4) Test results as calculated in Section 5.3 and reported as follows:

(a) Individual flame spread index value rounded to the nearest multiple of 5 **(ROP 255-11)**

(b) Individual smoke developed index value rounded to the nearest multiple of 5, and for smoke developed index values of 200 or more, the reported value shall be rounded to the nearest multiple of 50 **(ROP 255-14)**

(5) Details of specimen preparation and the mounting method used in the test chamber

(6) Observations of the burning characteristics of the specimen during test exposure such as, but not limited to, delamination, sagging, shrinkage, fallout, and the presence of flaming droplets **(ROP 255-15)**

(7) Time periods during which the measurement remains at 0 percent if the light transmission measurement reaches 0 percent **(ROP 255-16)**

Chapter 6 Mounting Methods (ROP 255-17)

6.1 General.

6.1.1* These mounting methods shall be required for some materials for test method uniformity and convenience.

6.1.2* If none of the mounting methods described are applicable for some building materials, other means of support shall need to be devised.

6.1.3 Wherever reinforced cement board is specified as a backing, the material shall be nominal 1/4 in. (6.3 mm) thick, complying with ASTM C 1186 and passing ASTM E 136, and uncoated.

6.1.4 Where metal rods are specified as supports, 1/4 in. (6.3 mm) metal rods spanning the width of the tunnel shall be used.

6.1.4.1 Rods shall be placed approximately 2 in. (51 mm) from each end of each panel.

6.1.4.2 Additional rods shall be placed approximately at 2 ft (0.61 m) intervals, starting with the first rod at the fire end of each panel.

6.2 Acoustical and Other Similar Panel Products of Less Than 20 in. (508 mm).

6.2.1 For acoustical materials and other similar panel products with a maximum dimension of less than 20 in. (508 mm), metal splines or wood furring strips and metal fasteners shall be used.

6.2.2 Steel tee splines for mounting kerfed-acoustical tile shall be nominal 1/2 in. (12.7 mm) web 3/4 in. (19 mm) flange, formed No. 24 MS gauge sheet metal.

6.2.3 Wood furring frames for mounting acoustical materials and other similar panel products of less than 20 in. (508 mm) shall be nominal 1 in. × 2 in. (25.4 mm × 51 mm) wood furring joined with corrugated metal fasteners.

6.2.4 Two frames shall be used, as shown in Figure 6.2.4.

FIGURE 6.2.4 Wood Frame for Acoustical Materials and Other Similar Panel Products of Less Than 20 in. (508 mm). [Existing Figure B.2.3, 2000 ed., (no change)]

6.3 Adhesives.

6.3.1 To determine the surface burning characteristics of adhesives, they shall be mixed as specified in the manufacturer's instructions and applied to reinforced cement board in the thickness or at the coverage rate recommended by the manufacturer.

6.3.2 The adhesive application shall be cured prior to testing.

6.4 Batt- or Blanket-Type Insulating Materials.

6.4.1 Batt or blanket materials that do not have sufficient rigidity or strength to support themselves shall be supported by metal rods inserted through the material and positioned so that the bottom of the rod is approximately 1/4 in. (6.3 mm) from the surface to be exposed to the flame.

6.4.2 This mounting method is not suitable for batt or blanket materials less than 1 in. (25.4 mm) thick and shall not be used.

6.5 Coating Materials, Cementitious Mixtures, and Sprayed Fibers.

6.5.1 Coating materials, cementitious mixtures, and sprayed fibers shall be mixed and applied to the substrate as specified in the manufacturer's instructions at the thickness, coverage rate, or density recommended by the manufacturer.

6.5.2 Materials intended for application to wood surfaces shall be applied to a substrate made of nominal 25/32 in. (19.8 mm) tongue and groove red oak flooring or to other materials for which the surface burning characteristic is to be measured.

6.5.2.1 The pieces shall be placed side by side and secured with four nailing strips spaced approximately 3-1/2 ft (1.07 m) apart to hold the pieces together as shown in Figure 6.5.2.1.

FIGURE 6.5.2.1 Wood Deck for Coating Material. [Existing Figure B.5.2, 2000 ed., (no change)]

6.5.2.2 Two decks placed end to end shall be used.

6.5.3 Materials intended for application to particular combustible surfaces other than wood shall be applied to the specific surfaces for which they are intended.

6.5.4 Materials intended for field application to noncombustible surfaces only shall be applied to 1/4 in. (6.3 mm) reinforced cement board.

6.6 Loose-Fill Insulation. Loose-fill insulation shall be tested in one of two ways as described in 6.6.1 or 6.6.2.

6.6.1 The specimen shall be placed on galvanized steel screening with openings of approximately 3/64 in. (1.2 mm) supported on a test frame 20 in. (508 mm) wide × 2 in. (51 mm) deep, made from steel angles of 2 in. × 3 in. × 3/16 in. (51 mm × 76 mm × 4.8 mm).

6.6.2 Three frames shall be used as shown in Figure 6.6.2.

FIGURE 6.6.2 Steel Frame for Loose-Fill Materials. [Existing Figure B.6, 2000 ed., (no change)]

6.6.3 The specimen shall be tested in accordance with ULC S10 2.2, *Standard Method of Test for Surface Burning Characteristics of Flooring, Flooring Covering and Miscellaneous Materials and Assemblies.*

6.6.4 The insulation shall be packed to the density specified by the manufacturer.

6.7 Duct Insulation Materials or Systems. Duct insulation materials or systems shall be tested in accordance with ASTM E 2231, *Standard Practice for Specimen Preparation and Mounting of Pipe and Duct Insulation Materials to Assess Surface Burning Characteristics.*

6.8 Thin Membranes.

6.8.1 Single-layer membranes of thin laminates consisting of a limited number of similar or dissimilar layers shall be permitted to be supported on poultry netting placed on metal rods as provided in Section 6.4.

6.8.2 Netting shall be 20 gauge 2 in. (51 mm) hexagonal galvanized steel poultry netting conforming to ASTM A 390, *Standard Specification for Zinc-Coated (Galvanized) Steel Poultry Fence Fabric (Hexagonal and Straight Line).*

6.8.3 The specimen shall be tested while bonded to a substrate representative of a field installation.

6.8.4 Testing shall only be conducted on poultry netting if no other mounting method is appropriate.

6.9 Vinyl and Paper Wall Coverings.

6.9.1 Whenever a vinyl or paper wall covering system uses an adhesive to attach a wall covering material, the adhesive specified by the manufacturer shall be used for construction of the test specimen in a manner consistent with field practice.

DRAFT

6.9.2 If the vinyl or paper wall covering system is a factory-produced wall panel, the adhesive shall be the same one used in the manufacture of the factory-produced wall panel.

6.9.3 Application to Noncombustible Wall Surface.

6.9.3.1 The specimens shall consist of the wall covering mounted on a 1/4 in. (6.3 mm) reinforced cement board, complying with ASTM C 1186 and passing ASTM E 136.

6.9.3.2 The specimens shall be mounted on the ledges of the test furnace without using additional means of support.

6.9.4 Application over Gypsum Board.

6.9.4.1 The specimens shall consist of the wall covering mounted on a 5/8 in. (15.9 mm) Type X gypsum wall board, complying with ASTM C 36/C 36M.

6.9.4.2 The gypsum wallboard shall not be required to be mounted on studs.

6.9.4.3 The specimens shall be mounted on the ledges of the test furnace without using additional means of support.

6.9.5 Whenever a vinyl or paper wall covering has been tested using the test specimen described in 6.9.4, it shall not be required to be additionally tested mounted on a reinforced cement board.

6.9.6 Application over Substrates Other Than Wood, Gypsum Board, or Noncombustible Surfaces.

6.9.6.1 The specimens representing wall coverings intended for application over any substrate (except for wood, gypsum board, or a noncombustible surface) shall consist of the wall covering mounted on that substrate.

6.9.6.2 The specimens shall be mounted on the ledges of the test furnace without using an additional means of support.

6.9.7 Application over a Wood Substrate.

6.9.7.1 The specimens representing wall coverings intended for application over a wood substrate shall consist of the wall covering mounted on untreated plywood of the same thickness as the wood substrate used in field practice.

6.9.7.2 The specimens shall be mounted on the ledges of the test furnace without using an additional means of support.

6.9.8 Wall Coverings Suspended or Otherwise Supported by Framing or Track System.

6.9.8.1 The specimens shall consist of the wall covering mounted for test in a manner that is representative of its installation.

6.9.8.2 When not practical, for example because the material is not able to be made into a self-supporting test specimen, the test specimen shall be supported on poultry netting placed on steel rods.

6.9.8.3 The netting shall be 20 gauge 2 in. (51 mm) hexagonal galvanized steel poultry netting conforming to ASTM A 390.

6.9.8.4 The netting shall span the width of the tunnel furnace.

6.9.8.5 The steel rods 1/4 in. (6.3 mm) in diameter by 20 in. to 24 in. (510 mm to 610 mm) in length shall span the width of the tunnel furnace and shall be placed at approximately 2 ft (0.6 m) intervals starting with the fire end of the panel, approximately 2 in. (51 mm) from the end of the test specimen.

6.9.8.6 Testing shall only be conducted on poultry netting if no other mounting method is appropriate.

6.10 Plastics.

6.10.1 General.

6.10.1.1 The term *plastics* shall include foams, reinforced panels, laminates, grids, and transparent or translucent sheets.

6.10.1.2 The plastic materials included in this section shall be those that do not qualify under any of the previous sections.

6.10.2 Where any plastic remains in position in the tunnel during a fire test, no additional support shall be necessary.

6.10.3 Thermoplastic materials and other plastics that do not remain in place shall be supported by 1/4 in. (6.3 mm) round metal rods or 3/16 in. (4.8 mm) thick × 2 in. (51 mm) wide steel bars, or 2 in. (51 mm) galvanized hexagonal wire mesh supported with metal bars or rods spanning the width of the tunnel.

6.11* Bonding.

6.11.1 Where the surface burning characteristics of the material itself are required, specimens shall be mounted on reinforced cement board with a high-temperature bonding mortar or the equivalent.

6.11.2 The application shall be determined by a 3/32 in. (2.4 mm) notched trowel held at an 80 degree to 90 degree angle using a random pattern.

6.11.3 The adhesive shall be applied only to the specimen back.

6.11.4 The specimen then shall be placed on the smooth side of the reinforced cement board and rolled using a 100 lb (54.4 kg) roller [nominal 5 in. (127 mm) long sections placed end to end for a total length of 15 in. (381 mm)].

6.11.5 The prepared samples shall be permitted to be dead-stacked overnight but shall be transferred to separate storage racks until tested.

6.11.6 Each sample shall be vacuumed prior to testing.

Annex A Explanatory Material

Annex A is not a part of the requirements of this NFPA document but is included for informational purposes only. This annex contains explanatory material, numbered to correspond with the applicable text paragraphs.

A.1.2.2 There is not necessarily a relationship between the measurements of smoke density and flame spread rate.

A.4.1.1 The following product references can be useful in obtaining materials for the construction of the fire test chamber and are provided for informational purposes only and have not been independently verified, certified, or endorsed by NFPA or any of its technical committees:

(1) Woven fiberglass tape, $1^1/_2$ in. × $^1/_8$ in. (38.1 mm × 3.1 mm), No. 8817K35 from McMaster-Carr, P.O. Box 54960, Los Angeles, CA 90054, or an equivalent, is suitable for this purpose.

(2) This method of lining the sides and base of the duct with insulating masonry is based on the use of G-26 fire brick manufactured by A.P. Green Refractories, Green Boulevard, Mexico, MO 65265.

(3) Double-pane observation windows should be constructed of heat-resistant glass, such as the following:

(a) Vycor, 100 percent silica glass, nominal $^1/_4$ in. (6.3 mm) thick, is suitable for the interior pane.

(b) Pyrex® glass, nominal $^1/_4$ in. (6.3 mm) thick, is suitable for the exterior pane.

A.4.1.2 High-temperature furnace refractory Zircon has been found suitable for this purpose.

A.4.1.3 The purpose of the baffles is to ensure turbulent flow. The following is being provided for informational purposes only and has not been independently verified, certified, or endorsed by NFPA or any of its technical committees. This method for turbulence baffling is based on the use of G-26 fire brick, manufactured by A.P. Green Refractories, Green Boulevard, Mexico, MO 65265.

A.4.1.4 The following is being provided for informational purposes only and has not been independently verified, certified, or endorsed by NFPA or any of its technical committees. For reinforced cement board, Manville Building Materials Corporation Flexboard II and Tunnel Building Products sterling board are suitable materials for this purpose.

A.4.1.4.2(4) $k\rho C$=thermal conductivity × density × specific heat.

A.4.1.7 The following is being provided for informational purposes only and has not been independently verified, certified, or endorsed by NFPA or any of its technical committees. A Weston Instruments No. 856BB photronic cell and 12-volt sealed beam, clear lens, autolamp with an overall light-to-cell path length of 36 in. ± 4 in. (914 mm ± 102 mm) is suitable for this purpose.

A.4.3.2.2 The purpose of the manometer reading is to indicate that no excessive air leakage exists.

A.4.3.4 The following is being provided for informational purposes only and has not been independently verified, certified, or endorsed by NFPA or any of its technical committees. A Thermo Systems Inc. Model 1610 velocity transducer (thermal anemometer), using a readout device accurate to 0.001 volt, is suitable for this purpose.

A.4.3.7.2 The preheating is for the purpose of establishing the conditions that exist following successive tests that indicate the control of the heat input into the test chamber.

A.5.3.1 For example, in Figure A.5.3.1, the flame spread shown is 10 ft (3.05 m) in $2^1/_2$ minutes and then it recedes. The area is calculated as though the flame had spread to 10 ft (3.05 m) in $2^1/_2$ minutes and then remained at 10 ft (3.05 m) for the remainder of the test or until the flame front again passed 10 ft (3.05 m) as indicated by the broken line in Figure A.5.3.1. The area, A_1, used for calculating the flame spread index values is the sum of areas A_1 and A_2 as shown. **(ROP 255-11)**

FIGURE 5.3.1 Example of Distance–Time Curve with Flame Front Recession. [Existing Figure 3.3.1, 2000 ed., (no change)]

A.6.1.1 This chapter has been compiled as an aid in selecting a method for mounting various building materials in the fire test chamber.

A.6.1.2 These mounting methods are grouped according to building materials to be tested that are identified broadly by either the usage or the form of the material.

A.6.11 This method of testing produces results suitable exclusively for research purposes.

Sairmix No. 7 high-temperature bonding mortar, manufactured by A.P. Green Refractories, Green Boulevard, Mexico, MO 65265, and Kentile No. 9 epoxy, manufactured by Kentile Floors, Inc., Brooklyn, NY 11215, have been shown to be suitable adhesives.

DRAFT

Annex B Derivation of Flame Spread Area Formulas in Section 5.3 (ROP 225-17)

This annex is not a part of the requirements of this NFPA document but is included for informational purposes only.

B.1 Introduction.

B.1.1 This annex contains an abbreviated discussion of the derivations of the flame spread area formulas used to calculate the flame spread value in this test method. This annex not only provides the derivations of the formulas but illustrates the relationship between this method of flame spread calculation and a previous method.

B.1.2 In these calculations, it is assumed that the flame front never recedes. Therefore, in Figure 5.3.1, an imaginary line borders the upper edge of area A_2.

B.2 Formula 1 Constant. In Figure B.2, an idealized straight-line flame spread distance–time curve is plotted. The plots for 0*A*, 0*A*', and 0*A*" create a combined area, 0*RA*. 0*RA* has a maximum possible area of 97.5 min-ft ($^1/_2$ × 10 min × 19.5 ft) [29.7 min-m ($^1/_2$ × 10 min × 5.94 m)]. These straight-line plots represent a steady progression of the flame front to a maximum distance at the end of the 10-minute test.

FIGURE B.2 Idealized Straight-Line Flame-Spread Distance–Time Curve for Total Areas Less Than or Equal to 97.5 min-ft (29.7 min-m). [Existing Figure C.2, 2000 ed., (no change)]

B.2.1 Where the flame front spreads for its maximum distance of 19.5 ft (5.94 m) in 10 minutes, a formula used in Section 5.3 would yield the following:

$$FSI = \frac{550}{t} = \frac{550}{10}$$

where:

FSI = flame spread index

t = time

B.2.2 Where the flame front is maximized at 19.5 ft (5.94 m) in 10 minutes, the area in Figure B.2, 0*RA*, is maximized to 97.5 min-ft (29.7 min-m).

B.2.3 To relate the current formula, which is of the straight-line, origin intercept type, to the formula specified in B.2.1, it is necessary to express the flame spread index as follows:

$$FSI = \frac{550}{t} = KA_T$$

where:

K = proportionality constant for equations of the current formula

A_T = total area under area 0*RA* in Figure B.2

If A_T = 97.5 min-ft (29.7 min-m) at t = 10 min, then

$$FSC = \frac{550}{10} = K \times 97.5$$

and

$$K = \frac{550}{10 \times 97.5} = 0.564$$

Applying the value of K as derived in B.2.3, the formula in 5.3.2 for areas (A_T) of 97.5 min-ft (29.7 min-m) or less is as follows:

$FSI = 0.564A_T$

B.3 Formula 2 Constant. In the idealized straight-line flame spread distance–time curve of Figure B.3, lines 0*I*, 0*I* ', and 0*I* " create a group of trapezoidal areas, 0*RBI*, ranging from 97.5 min-ft to 195 min-ft (29.7 min-m to 59.4 min-m) [$^1/_2$ × 10 min × 19.5 ft (5.94 m) to 10 min × 19.5 ft (5.94 m)]. This represents a flame front progression to the end of the specimen within the 10-minute test. The area (A_T) of 0*RBI* is expressed as follows:

$$\left(\frac{1}{2} \times 19.5 \times 0R\right) + \left[\frac{1}{2} \times 19.5 \times (10 - AI)\right]$$

which is equal to

195 – 9.75AI, since 0*R* is always 10 minutes.

FIGURE B.3 Idealized Straight-Line Flame Spread Distance–Time Curve for Total Areas Greater Than 97.5 min-ft (29.7 min-m). [Existing Figure C.3, 2000 ed., (no change)]

B.3.1 The triangular area, 0*IA*, divided into a proportionality constant, *K*, determines the relationship between flame spread values and the rate and distance of flame propagation. The total area available is 195 min-ft (59.4 min-m); therefore, area 0*IA* is equal to 195 0*RBI*. Thus, a new flame spread formula can be derived as follows:

$$FSI = \frac{K}{0IA} = \frac{K}{195 - 0RBI} = \frac{K}{195 - A_T}$$

B.3.2 To establish *K*, a relationship between the current and previous formulas is established at the red oak calibration point of 19.5 ft (5.94 m) progression at 5.5 minutes as follows:

$$FSI = \frac{550}{1} = \frac{K}{195 - A_T}$$

where A_T = 195 – [9.75 (5.5)] = 141.38 min-ft and I = 5.5 minutes.

Thus,

$$FSI = \frac{550}{I} = \frac{K}{195 - 141.38}$$

or

$$K = \frac{550 \times (53.63)}{5.5} = 5363$$

B.4 Formula 1 and Formula 2.

B.4.1 To account for the disproportionate increase that can occur in *FSI* values at the lower end of the index scale, for K = 0.564 in Formula 1 and K = 5363 in Formula 2, a further mathematical modification is made.

B.4.2 To establish the relationship between the constants (*K*) in Sections B.2 and B.3, it is necessary to consider the forms of the basic formulas, which are as follows:

$$FSI = \frac{K_1}{195 - A_T} \left(A > K_2\right)$$

$$FSI = K_3 A_T \left(A < K_2\right)$$

where:

K_1 = 100(195 – R)

R = area under the curve that is to be associated with an index of 100

K_2 = arbitrary choice within the limits of 0 and 195

K_3 = $K_1/[K_2(195 - K_2)]$

B.4.3 Choosing K_2 = 195 ÷ 2 produces a minimum value of K_3; that is, any other K_2 value will result in a higher K_3 value. Choosing R, the area under a red oak calibration plot, as a median value of 146 implies the following:

K_1=100(195–146)=4900

B.4.4 Using 97.5 as the value for K_2, the formula for K_3 is as follows:

$$K_3 = \frac{4900}{97.5 \times 97.5} = 0.515$$

Therefore, the formula for the flame spread index in 5.3.2 is as follows:

FSI=0.515A_T

Therefore, the formula for the flame spread index in 5.3.3 is as follows:

$$FSI = \frac{4900}{195 - A_T}$$

Annex C Commentary

This annex is not a part of the requirements of this NFPA document but is included for informational purposes only.

C.1 Introduction.

C.1.1 This commentary has been prepared to provide the user of NFPA 255 with background information, including references, on the development and use of this method. It also provides the reader and user with the basis for the methods that have been used for deriving numerical flame spread indexes (*FSI*), an appreciation of the variability of the test, and comments on its application and limitations for testing selected types of materials.

DRAFT

C.1.2 On November 28, 1942, four hundred ninety people died in a fire in the Coconut Grove Nightclub in Boston. On June 5, 1946, sixty one people died in the La Salle Street Hotel fire in Chicago. On December 7, 1946, a fire in the Winecoff Hotel in Atlanta, Georgia, claimed the lives of one hundred nineteen people. These fires had one thing in common. In all three fires, rapid flame spread along the surfaces of interior finish was judged to be a major factor in fire growth. Two of the structures had burlap wall coverings and the other had an early type of plywood that had seriously delaminated.

C.1.2.1 The fire protection authorities investigated several test methods with the objective of providing one that could be used to regulate interior finish materials and minimize repetition of such fires. These tests, all relatively small laboratory tests, included the following:

(1) Forest Products Laboratory Fire Tube Test (now ASTM E 69, *Standard Test Method for Combustible Properties of Treated Wood by the Fire-Tube Apparatus*)

(2) Federal Specification SS A118b (acoustical tile/bunsen burner test, replaced by SS-A-118a-7/63, referencing ASTM E 84, *Standard Test Method for Surface Burning Characteristics of Building Materials*)

(3) New York City Timber Test and Shavings Test (now obsolete)

(4) Crib Test, ASTM Specification C 160-41 T (now ASTM E 160, *Test Method for Combustible Properties of Treated Wood by the Crib Test*)

(5) Swedish Schlyter Test [1]

C.1.2.2 ASTM E 84/NFPA 255 was developed on the premise that a large test would provide a more realistic and comprehensive test, and it has since been widely adopted for use by the building code authorities to regulate the use of interior finish materials.

C.1.2.3 Subsequently, during this same period, two other test methods were developed for the NBS radiant panel test (ASTM E 162, *Standard Test Method for Surface Flammability of Materials Using a Radiant Heat Energy Source*) and the FPL 8-foot tunnel test [ASTM E 286, *Test Method for Surface Flammability of Building Materials Using an 8-ft (2.44-m) Tunnel Furnace*]. While ASTM E 162 is still widely used, especially in the transportation industry, ASTM E 286 has been discontinued by ASTM and is no longer in use.

C.2 History of ASTM E 84/NFPA 255.

C.2.1 The first tunnel-type furnace was built at Underwriters Laboratories around 1922, when fireproofing paints and specifically whitewash were actively promoted. The equipment consisted of a long bench with a noncombustible top. The sample consisted of a wood trough about 16 ft long × 18 in. wide × 18 in. deep (4.88 m long × 0.457 m wide × 0.457 m deep), placed upside down on the bench. The inside of the trough was coated with the paint. A known quantity of wood at one end furnished the ignition source.

C.2.2 In 1927 and 1928, chemically impregnated wood was being developed, and Underwriters Laboratories used a tunnel 36 in. wide × 23 ft long × 13 in. deep (0.914 m wide × 7.0 m long × 0.33 m deep) to evaluate its performance. It was during this time that red oak flooring was selected as a control to be used to calibrate the furnace. The sample formed the top of the tunnel. The fuel and draft also were controlled.

C.2.3 In the early 1940s, a desire to reduce the flammability of wood-based products and the introduction of new building materials and combinations of materials created a need to improve the tunnel further. The development of the third tunnel furnace is explained fully in Underwriters Laboratories Bulletin of Research No. 32. [2]

C.2.3.1 Subsequent refinements were incorporated, and the first formal test method was published as UL 723, *Standard for Safety Test for Surface Burning Characteristics of Building Materials*, by Underwriters Laboratories in August 1950. Subsequent revised editions were published.

C.2.3.2 The National Fire Protection Association adopted a test method functionally identical to UL 723, as NFPA 255 in 1955, with periodic revisions since then. The test was adopted by ASTM as a tentative standard in 1950 and formally adopted in 1961 as ASTM E 84, with periodic revisions since then.

C.2.4 The tunnel has been designated the "Steiner Tunnel" by Underwriters Laboratories in honor of Albert J. Steiner who spent much time developing this and many other fire test methods.

C.2.5 Since 1950, the flame spread properties of materials, as measured by this method, have been reported as ratings, classifications, or indexes. An index is considered more indicative of the nature of the results and is the present terminology used in the standard.

C.2.5.1 The original method of determining flame spread index was based on either the ratio of the time at which flames traveled the full tunnel length or the partial flame travel distance relative to that of red oak.

C.2.5.2 In 1968, a change was made in the *FSI* calculation to account for an anomaly between results for flame spread greater than or less than $13^1/_2$ ft (4.1 m). In 1976, the flame spread index was revised to be based on area. The total area under the distance–time curve, ignoring any flame front recession, was compared to a specified area typical of the burning of red oak flooring. The current calculation method (*see Chapter 6*) uses a formula that takes into account the rate of flame travel.

C.2.6 The sensitivity study by Endicott and Bowhay in 1970 has led to a concerted effort by the ASTM tunnel operators group to address concerns identified by that study. [3] Since 1975, a series of changes have been specified in the standard. These include defining the duration of furnace preheating, the incorporation of a floor thermocouple, and the specification of the details of furnace construction and standardization.

C.2.7 Particular attention has been paid to the refinement of the apparatus and procedure involved in the measurement of the smoke generated during testing. Round-robin tests that have been conducted to date have indicated large differences in smoke development values for interlaboratory tests on replicate specimens. [4]

C.2.8 Some of these revisions noted in Section C.2 include standardization of the smoke-density measuring equipment, its location in the exhaust duct, and its orientation. The measurement of smoke density is reported in terms of the area under the light absorption–time curve relative to a similar curve for red oak. Because the quality of vision-obscuring particles in the smoke column is not linearly related to light absorption, this procedure has been criticized by some parties. The method does, however, provide a basis for comparisons.

C.2.9 In 1970, a revision to the scope of this standard was adopted to emphasize that there was no direct relationship between the flame spread index (*FSI*) and the fuel contributed or smoke density index (SDI). This revision was deemed necessary because some enforcement officials were assigning equal significance to the values.

C.2.10 Prior to 1978, the report of tests included an evaluation of the fuel contribution as well as the *FSI* and SDI. However, it is now recognized that the rise in temperature of the thermocouple located near the end of the tunnel, where the thermocouple is based, does not provide a valid measure of fuel contribution. Therefore, although the data are recorded during the test, this information is no longer normally reported.

C.2.11 Chapter 6, adopted in 1968 as Annex B, was intended as a guide for the mounting of specimens. The former Annex B was not a mandatory part of the method, since the intent of the method is that the specimen be tested as closely as possible to the manner in which it is to be applied in general use. In 1978, revisions were made to the annex that dealt with the testing of adhesives, the description of a wood substrate for testing coatings, and the definition of the properties of the reinforced cement board used as a standard backing and the metal rods used as supports. For the 2005 edition, Annex B was moved to the body of NFPA 255 as Chapter 6 and was written in mandatory language.

C.3 Fire Exposure Conditions.

C.3.1 The tunnel test fire exposure is provided by a $4^1/_2$ ft (1.37 m) long test flame covering approximately 7 ft² (0.65 m²) of the 36 ft² (3.34 m²) of the exposed specimen surface during the 10-minute test period. It releases heat at a rate of approximately 5000 Btu/min (88 kW) and creates gas temperatures near the specimen surface of up to 1600°F (900°C).

C.3.2 The size and heat release rate of the exposing flame developed after repeated experimental tests, although not optimum fire conditions, were selected to produce a flame spread over the entire length of the calibration material in about $5^1/_2$ minutes. [5] It was found that conditions could be changed so that flames would spread faster, but these conditions caused the flame to spread too fast to make the necessary observations of the flame spread, smoke density, and temperature rise of the thermocouple.

C.4 Furnace Calibration.

C.4.1 Select red oak was chosen as a control material because it is a fairly uniform grade of lumber that is nationally recognized, whereas many other types have a purely local significance. It is readily available, is usually uniform in thickness and moisture content, and generally provides repetitive results. In recent years, experiments have used man-made materials, such as particle board, in the hope of further refining repeatability; however, red oak is still used as a calibrating material.

C.4.2 The operating conditions of the tunnel are adjusted if necessary to ensure that the flame spreads to the end of the tunnel in 5.5 minutes ± 0.25 minute using a specimen of red oak flooring. Tests are run with a reinforced cement board (ACB) specimen to establish the distance of the exposing flame at $4^1/_2$ ft (1.37 m). The calibration specifies only the time at which the flame passes over the end of the specimen. The *FSI* is determined by dividing the area under the flame spread by the time curve. Therefore, the *FSI* of red oak is no longer exactly 100 as originally specified.

C.4.3 Recognition of the importance of turbulence, including the role of fire bricks and of window recesses, resulted in a revision in the method in 1976.

C.5 Repeatability and Reproducibility.

C.5.1 Four round-robin tests have been conducted. The first took place in 1958 and was conducted by Underwriters Laboratories and Southwest Research Institute; the second, in 1959, was sponsored by the former Acoustic Tile Association and was conducted by four laboratories using four different tiles; the third, in 1973, was conducted on floor coverings by the National Bureau of Standards in cooperation with 11 laboratories; and the fourth, in 1978, on loose-fill cellulosic insulation, was conducted by the Consumer Product Safety Commission using six laboratories. [4, 6]

C.5.2 Other tests are now in progress under the auspices of ASTM Committee E-5. A precision and accuracy statement is being prepared. In the interim, the reader is directed to the round-robin reports if information on precision and accuracy is needed.

C.5.3 An ASTM task group of Subcommittee E05.22, composed of tunnel operators, is reviewing comprehensive design and operational and procedural revisions to improve uniformity among facilities.

DRAFT

C.6 Advantages and Problems. Test results from this standard generally have shown performance similar to that observed during accidental building fires for some materials and exposure. It should be emphasized, however, that it is the intent of the method to provide only comparative classifications.

C.6.1 The test method provides a large, flaming fire exposure, with specimen thermal exposure and area coverage sufficient to bring about progressive surface burning and combustible volatile generation characteristics of the materials under evaluation, resulting in a moving, wind-aided flame front.

C.6.2 The test method involves a large specimen, nominally 36 ft^2 (3.34 m^2) of exposed area, which allows realistic fire involvement of material surfaces and the development of physical and structural failures (e.g., collapse, buckling, large ruptures, or cracks) that can influence flammability performance during the test.

C.6.3 The test method can be applied to a wide range of materials, including composite constructions of faced or laminated boards, panels, units, or sections in actual field-installed thicknesses.

C.6.4 The test method can be used to measure the effects of density, thickness, surface contour, surface finish, delamination, strength, and joint design on the surface flammability of the specimen.

C.6.5 The test method characterizes most high flame spread materials that have been involved in rapidly developing field fires (e.g., highly combustible coatings on wood products, certain cellulosic acoustical materials, and insulation facings applied with combustible adhesives) and provides an accurate characterization of the performance of some low flame spread materials in actual fires (e.g., gypsum and mineral products).

C.6.6 Although the test measures surface burning characteristics, the visual observation of flame travel is based on maximum flame extension anywhere within the tunnel volume, not necessarily directly on a specimen surface that is not necessarily clearly visible. Surface flammability measurements of building materials do not yield a unique material property. Rather, the measurement is highly influenced by the method of test used.

C.7 Uses and Limitations.

C.7.1 The orientation of the specimen in this method is in a horizontal ceiling position. This orientation places some limitations on the type of material that can be realistically mounted during testing. Prior to 1960, the tunnel was used primarily for the investigation of the surface burning characteristics of homogeneous compositions of ceiling and wall finishes, such as acoustical tiles, wall coverings, coatings, and various types of decorative panel, with all materials able to remain in the ceiling position throughout the test.

(ROP 225-20)

C.7.2 Through adaptation *(see Chapter 6)*, the procedure was expanded to include the evaluation of composites and assemblies. Chapter 6 describes the mounting methods to be used for the following types of products:

(1) Acoustical and similar panel products of less than 20 in. (508 mm)

(2) Adhesives

(3) Batt- and blanket-type insulating materials

(4) Coating materials, cementitious mixtures, and sprayed fibers

(5) Loose-fill insulation

(6) Duct insulation materials and systems

(7) Thin membranes, vinyl and paper wall covering materials, and plastics

Special mounting methods, suitable as a reasonable representation of the field use of the material, should be used for other materials. **(ROP 255-20)**

C.7.3 The difficulty of defining materials that contribute little or no fuel to a fire has in the past led to the use of ASTM E 84/NFPA 255 to provide information about the combustibility of materials. ASTM Committee E-5 and the NFPA Technical Committee on Fire Tests do not and have not ever recommended that the results of these tests alone be used to describe material combustibility.

C.7.4 Composite assemblies or panels that use metal or mineral facings and combustible interior cores, and that remain essentially impermeable to flame throughout the test, might not be completely evaluated for surface burning behavior by this method, since the interior cores are not fully challenged.

C.7.5 Some materials require support to remain in place during the test, such as loose-fill insulation supported by a metal screen. The supporting screen tends to produce low flame spread indexes relative to those obtained for materials that are not so supported. Conversely, materials that are supported on rods, such as batt insulation, can produce higher *FSI*s if retained on the ceiling rather than allowed to burn on the floor.

C.7.6 Some materials, such as composites, can delaminate during the test. Delamination can cause either of the following possible responses:

(1) The material can expose two or more surfaces to the flame, increasing the *FSI*.

(2) The material can sag or one end can drop into the fire chamber, impeding further flame spread.

C.7.7 Some materials, such as cellular plastics and thermoplastic and thermosetting materials, can be difficult to evaluate. Thermoplastic and thermosetting materials that are not mechanically fastened often fall to the floor of the tunnel and usually produce relatively low *FSI*s. If supported on wire screen, rods, or other supports, these materials can become completely engulfed in flame, thereby creating a questionable comparison between the surface flame spread of nominal 1 in. (25.4 mm) thick red oak and the burning rate of these materials.

Where the entire specimen is consumed, as opposed to the surface burning of red oak, much more oxygen is used and higher smoke developed indexes are usually obtained for these materials.

C.7.8 The materials described in this section, (i.e., those that drip, melt, delaminate, draw away from the fire, or need artificial support) present unique problems and necessitate careful interpretation of the test results. Some of these materials that are assigned a low *FSI* based on this test method can exhibit an increasing propensity for generating flameover conditions during room fire tests with increasing area of material exposure and increasing intensity of fire exposure. The result, therefore, might not be indicative of their performance if evaluated under large-scale test procedures. Alternative means of testing could be necessary to fully evaluate some of these materials.

C.7.9 To provide needed technical data, flammability evaluations of cellular plastics for building construction using the Steiner Tunnel began with the testing and classification of a flame retardant formulation of polystyrene foam board in 1960, with subsequent evaluation of polyurethane-type boards incorporating flame-retarded resin systems (first generation) beginning in 1964, polymerically and chemically modified flame-retardant polyurethane-type formulations (second generation) in 1965, polyisocyanurate-type foams initiated in 1968, and, most recently, urea-formaldehyde-type, cavity-fill foams. Spray-applied and poured-in-place cellular foam systems were first subjected to the test in 1968 and 1972, respectively. **(ROP 255-20)**

C.7.10 From 1960 through 1973, over 2000 tunnel tests have been conducted on flame-retarded and general-purpose polystyrene, polyurethane, polyisocyanurate, and urea-formaldehyde cellular plastics, in board-stock, spray-applied, or poured-in-place forms, and have yielded flame spread values ranging from less than 5 to over 2000. [7] **(ROP 255-20)**

C.7.11 The flame spread index of some materials varies depending on environmental conditions. The prescribed limits on the temperature and relative humidity for specimen conditioning and tunnel air supply [both 73.4°F ± 5°F (23°C ± 2.8°C), 50 percent rh ± 5 percent rh] were selected to minimize these effects.

C.8 Correlation with Other Fire Conditions.

C.8.1 Several studies have examined the relationship of the flame spread index test results on materials to the performance of the same materials in large-scale fire growth experiments and in other laboratory test methods. **(ROP 255-21)**

C.8.2 Some comparisons with large-scale experiments are provided in the notes to this annex. Comparisons also have been made between the ASTM E 84/NFPA 255/UL 723 test and other tests, including ASTM E 162, *Standard Test Method for Surface Flammability of Materials Using a Radiant Heat Energy Source*, and some discontinued tests. **(ROP 255-21)**

C.9 Notes to Annex C.

(1) A. J. Steiner, B*uilding Officials Conference of America Yearbook*, 1949–1950, pp. 115–116.

(2) Underwriters Laboratories Inc., "Fire Hazard Classification of Building Materials," Bulletin of Research No. 32, Chicago, IL, September 1947.

(3) L. E. Endicott and R. B. Bowhay, "A Statistical Evaluation of the Fire Hazard Classification Furnace" (ASTM E 84-68), ASTM Materials Research and Standards, May 1970, pp. 19–21, 50–52.

(4) "Round-Robin Tests on Tunnel Type Flame Spread Furnaces," for ASTM Project No. 1-811-2, Final Report, Southwest Research Institute, San Antonio, TX, April 16, 1959.

(5) A. J. Steiner, "Burning Characteristics of Building Materials," *Fire Engineering*, May 2, 1951.

(6) T. G. Lee and C. Huggett, "Interlaboratory Evaluation of the ASTM E 84-70 Tunnel Test Applied to Floor Coverings," *Journal of Testing and Evaluation*, vol. 3, no. 1, ASTM, 1975.

(7) Underwriters Laboratories Inc., "Flammability Studies of Cellular Plastics and Other Building Materials Used for Interior Finish," Subject 723, UL Inc., Northbrook, IL, June 13, 1975.

Annex D Informational References

D.1 Referenced Publications. The following documents or portions thereof are referenced within this standard for informational purposes only and are thus not part of the requirements of this document unless also listed in Chapter 2.

D.1.1 NFPA Publications. (Reserved)

D.1.2 Other Publications.

D.1.2.1 ASTM Publications. American Society for Testing and Materials, 100 Barr Harbor Drive, West Conshohocken, PA 19428-2959.

ASTM E 69, *Standard Test Method for Combustible Properties of Treated Wood by the Fire-Tube Apparatus*, 2002.

ASTM E 84, *Standard Test Method for Surface Burning Characteristics of Building Materials*, 1999.

ASTM E 160, *Test Method for Combustible Properties of Treated Wood by the Crib Test*, discontinued, 1993.

DRAFT

ASTM E 162, *Standard Test Method for Surface Flammability of Materials Using a Radiant Heat Energy Source*, 2002a.

ASTM E 286, *Test Method for Surface Flammability of Building Materials Using an 8-ft (2.44-m) Tunnel Furnace* (discontinued, 1991).

D.1.2.2 UL Publication. Underwriters Laboratories Inc., 333 Pfingsten Road, Northbrook, IL 60062-2096.

UL 723, *Standard for Test for Surface Burning Characteristics of Building Materials*, 2003.

D.1.2.3 Additional Publications.

Steiner, A. J., *Building Officials Conference of America Yearbook*, 1949–1950, pp. 115–116.

Underwriters Laboratories Inc., "Fire Hazard Classification of Building Materials," Bulletin of Research No. 32, Chicago, IL, September 1947.

Endicott, L. E., and R. B. Bowhay, "A Statistical Evaluation of the Fire Hazard Classification Furnace" (ASTM E 84-68), ASTM Materials Research and Standards, May 1970, pp. 19–21, 50–52.

"Round-Robin Tests on Tunnel Type Flame Spread Furnaces," for ASTM Project No. 1-811-2, Final Report, Southwest Research Institute, San Antonio, TX, April 16, 1959.

Steiner, A. J., "Burning Characteristics of Building Materials," *Fire Engineering*, May 2, 1951.

Lee, T. G. and C. Huggett, "Interlaboratory Evaluation of the ASTM E 84-70 Tunnel Test Applied to Floor Coverings," *Journal of Testing and Evaluation*, vol. 3, no. 1, ASTM, 1975.

Underwriters Laboratories Inc., "Flammability Studies of Cellular Plastics and Other Building Materials Used for Interior Finish," Subject 723, UL Inc., Northbrook, IL, June 13, 1975.

D.2 Informational References. (Reserved)

D.3 References for Extracts. (Reserved)

DRAFT