2019 Tech Session Agenda

Certified Amending Motions (CAMs)

June 20, 2019

Documents Reporting at the 2019 Tech Session
NFPA 25, *Standard for the Inspection, Testing, and Maintenance of Water-Based Fire Protection Systems*
NFPA 302, *Fire Protection Standard for Pleasure and Commercial Motor Craft*
NFPA 654, *Standard for the Prevention of Fire and Dust Explosions from the Manufacturing, Processing, and Handling of Combustible Particulate Solids*
NFPA 130, *Standard for Fixed Guideway Transit and Passenger Rail Systems*
NFPA 502, *Standard for Road Tunnels, Bridges, and Other Limited Access Highways*
NFPA 1961, *Standard on Fire Hose*
NFPA 1851, S*tandard on Selection, Care, and Maintenance of Protective Ensembles for Structural Fire Fighting and Proximity Fire Fighting*
NFPA 58, *Liquefied Petroleum Gas Code*
NFPA 801, *Standard for Fire Protection for Facilities Handling Radioactive Materials*
NFPA 855, *Standard for the Installation of Stationary Energy Storage Systems*
NFPA 70®, *National Electrical Code®*

Special Note:

In addition to the Tech Session Agenda, which incorporates both the 2018 Fall and two 2019Annual Motions Committee Reports, the complete technical committee records (First Draft Report and Second Draft Report) including all changes to the appropriate NFPA Standard, can be found on the Next Edition tab of the specific Document Information page, http://www.nfpa.org/document#.

Report Layout

Certified Amending Motions (CAMs)

This Report contains Certified Amending Motions (CAMs) for NFPA Standards in the Fall 2018 revision cycle and Annual 2019 revision c cle that will be considered at the June, 2019 NFPA Technical Meeting (Tech Session). These motions have been certified and determined as proper by the Motions Committee in accordance with the *Regulations Governing the Development of NFPA Standards (Regs)* and the *NFPA Technical Meeting Convention Rules (Convention Rules)*. Although **the motions as certified will not change**, the manner in which they are presented, their layout, and the accompanying supportive material may be modified (solely for presentation), removed or added to. Please make note of, and take into consideration, the following:

1) **Report Sections.**
The Motions are displayed via two distinct sections which are as follows:

   I. **CAM Overview**. Page 3 lists all the CAMs for NFPA 25 that can be pursued at the Tech Session. It includes a reference to the pages containing text that illustrates the potential impact of the CAMs if they were to pass or fail. This page is repeated for all other NFPA Standards being considered at the Tech Session.
   II. **Effect of CAMs.** Page 4 displays the potential text of NFPA 25 if Motion Seq # 25-1 were to pass or fail. These pages immediately proceed the applicable CAM Overview page and follow the same order as the motion sequence numbers (Motion Seq #). The impact of a successful CAM on the Second Draft text is shown legislatively. The effect of an unsuccessful motion is illustrated by simply showing the applicable Second Draft text, without legislative changes. Please see below the editorial legend used throughout these sections.

Draft text is displayed as follows:
(~~Strikethrough~~: indicates the deletion of text)
(Underline: indicates the addition of text)

2) **Editorial Renumbering.**
The text, which illustrates the Certified Amending Motion, is derived from the First Draft Report and Second Draft Report. As a result, the section numbers and other materials relating to formatting are subject to change based on the final recommendations of the entire standards development process.

3) **NFPA Technical Meeting Consideration.**
The material provided in this Report is intended to illustrate the potential impact of a successful or unsuccessful Amending Motion on the text of an NFPA Standard. The amendment is based on the recommendation of the NFPA membership when an Amending Motion is filed and presented in accordance with the *Regulations Governing the Development of NFPA Standards (Regs)*. **IMPORTANT NOTE:** The text as recommended by the NFPA membership is subject to the entire standards development process. Therefore, the standard, recommended amendment, and associated text cannot be considered final until the responsible committee(s) are balloted, where required by the *Regs*, and the standard is issued by the Standards Council. **Per Table 1 of the *Regs*, any failed Ballot will result in a recommendation to return the related text to previous edition text.**

Motion Seq #	NITMAM Log #	Section/Para	Person(s) Authorized to Make the Motion	Certified Amending Motion**	Motion Page #
25-1	8	5.2.8	Mark Hopkins, National Fire Sprinkler Association	Accept Public Comment No. 49	4
25-2	5	8.3.7.2.4	James Peterkin, TLC Engineering	Reject Second Revision No. 42	5
25-3	13	13.2.4	Mark Hopkins, National Fire Sprinkler Association	Reject Second Revision No. 63	6
25-4	14	13.2.4	Mark Hopkins, National Fire Sprinkler Association	Accept an Identifiable Part of Public Comment No. 40	8
25-5	4	G.3	Anthony Apfelbeck, Altamonte Springs Building/Fire Safety Department (Designated Rep. Top Myers)	Accept Public Comment No. 60	9

Motion Seq#	**Certified Amending Motion:** Accept Public Comment No. 49
25 - 1	**Recommended Text if Motion Passes:** ~~**5.2.8* General Information Sign.** The general information sign required by NFPA 13 shall be inspected annually to verify that it is provided, securely attached, and legible.~~ ~~**A.5.2.8** The sign referenced in 5.2.8 should satisfy the requirements of 4.1.9 and 5.2.7. See Figure A.5.2.8.~~ ~~**Figure A.5.2.8 Sprinkler System General Information. [13:Figure A.28.6]**~~
	Recommended Text if Motion Fails: **5.2.8* General Information Sign.** The general information sign required by NFPA 13 shall be inspected annually to verify that it is provided, securely attached, and legible. **A.5.2.8** The sign referenced in 5.2.8 should satisfy the requirements of 4.1.9 and 5.2.7. See Figure A.5.2.8. **Figure A.5.2.8 Sprinkler System General Information. [13:Figure A.28.6]**

Motion Seq#	**Certified Amending Motion:** Reject Second Revision No. 42
25 - 2	**Recommended Text if Motion Passes:** **8.3.7.2.4*** The following actions shall be required upon failure to meet the criteria in 8.3.7.2.3: (1) The owner shall be notified in writing of the unacceptable test results. (2) An investigation shall be conducted into the cause of the unacceptable test results. (3) Failure to provide the maximum system demand shall be deemed a deficiency ~~an impairment~~. (4) Degraded performance on a pump with excessive ~~Excessive~~ vibration and/or excessively worn or loose components shall be deemed a deficiency. (5) Degraded performance caused by normal wear that ~~still~~ provides the maximum system demand shall not be deemed a ~~noncritical~~ deficiency. (6) Deficiencies shall be corrected subject to the authority having jurisdiction's approval. (7) The owner shall be notified in writing of corrections completed. **8.3.7.2.4.1** Failure to meet the requirements of 8.3.7.2.3(1) shall require correction. **8.3.7.2.4.2** A test variance greater than 5 percent per 8.3.7.2.3(2) that meets the requirements of 8.3.7.2.3(1) shall not require correction.
	Recommended Text if Motion Fails: **8.3.7.2.4*** The following actions shall be required upon failure to meet the criteria in 8.3.7.2.3: (1) The owner shall be notified in writing of the unacceptable test results. (2) An investigation shall be conducted into the cause of the unacceptable test results. (3) Failure to provide the maximum system demand shall be deemed an impairment. (4) Excessive vibration and/or excessively worn or loose components shall be deemed a deficiency. (5) Degraded performance that still provides the maximum system demand shall be deemed a noncritical deficiency. (6) The owner shall be notified in writing of corrections completed.

Motion Seq#	**Certified Amending Motion:** Reject Second Revision No. 63
25 - 3	**Recommended Text if Motion Passes:** **13.2.4 Waterflow Alarm Devices.** ~~**13.2.4.1** Where a waterflow alarm device is not connected to a fire alarm system, an audible alarm shall be received within 5 minutes of waterflow initiation or simulated waterflow initiation.~~ ~~**13.2.4.2** Where a waterflow alarm device is connected to a fire alarm system, an audible alarm shall be received within the timeframe required by NFPA 72 or locally adopted fire alarm code.~~ **13.2.4.1~~3~~ Mechanical Waterflow Alarm Devices, Including, but Not Limited to, Water Motor Gongs.** **13.2.4.1~~3~~.1** Mechanical waterflow alarm devices shall be inspected quarterly to verify that they are free of physical damage. **13.2.4.1~~3~~.2** Mechanical waterflow alarm devices shall be tested quarterly. **13.2.4.2~~4~~ Vane-Type, Paddle-Type, and Pressure-Switch-Type Waterflow Devices.** **13.2.4.2~~4~~.1** Vane-type, paddle-type, and pressure-switch-type waterflow alarm devices shall be inspected quarterly to verify that they are free of physical damage. **13.2.4.2~~4~~.2** Vane-type, paddle-type, and pressure-switch-type waterflow alarm devices shall be tested semiannually. **13.2.4.3~~5~~** Testing waterflow alarm devices on wet pipe systems shall be accomplished by opening the inspector's test valve or by using the automated test equipment in accordance with 4.6.6. **13.2~~.4~~.4~~6~~** Where freezing weather conditions or other circumstances prohibits the use of the inspector's test valve, the bypass connection shall be permitted to be used. **13.2.4.5~~7~~** Fire pumps shall not be taken out of service during testing unless constantly attended by qualified personnel, or all impairment procedures contained in Chapter 15 are followed. **13.2.4.6~~8~~*** Testing waterflow alarm devices on dry pipe, preaction, or deluge systems shall be accomplished by using the bypass connection. **Recommended Text if Motion Fails:** **13.2.4 Waterflow Alarm Devices.** **13.2.4.1** Where a waterflow alarm device is not connected to a fire alarm system, an audible alarm shall be received within 5 minutes of waterflow initiation or simulated waterflow initiation. **13.2.4.2** Where a waterflow alarm device is connected to a fire alarm system, an audible alarm shall be received within the timeframe required by NFPA 72 or locally adopted fire alarm code. **13.2.4.3 Mechanical Waterflow Alarm Devices, Including, but Not Limited to, Water Motor Gongs.** **13.2.4.3.1** Mechanical waterflow alarm devices shall be inspected quarterly to verify that they are free of physical damage **13.2.4.3.2** Mechanical waterflow alarm devices shall be tested quarterly. **13.2.4.4 Vane-Type, Paddle-Type, and Pressure-Switch-Type Waterflow Devices.** **13.2.4.4.1** Vane-type, paddle-type, and pressure-switch-type waterflow alarm devices shall be inspected quarterly to verify that they are free of physical damage. **13.2.4.4.2** Vane-type, paddle-type, and pressure-switch-type waterflow alarm devices shall be tested semiannually. **13.2.4.5** Testing waterflow alarm devices on wet pipe systems shall be accomplished by opening the inspector's test valve or by using the automated test equipment in accordance with 4.6.6.

	13.2.4.6 Where freezing weather conditions or other circumstances prohibits the use of the inspector's test valve, the bypass connection shall be permitted to be used. **13.2.4.7** Fire pumps shall not be taken out of service during testing unless constantly attended by qualified personnel, or all impairment procedures contained in Chapter 15 are followed. **13.2.4.8*** Testing waterflow alarm devices on dry pipe, preaction, or deluge systems shall be accomplished by using the bypass connection.

Motion Seq#	**Certified Amending Motion:** Accept an Identifiable Part of Public Comment No. 40
25 - 4	**Recommended Text if Motion Passes:** **13.2.4 Waterflow Alarm Devices.** **13.2.4.1** Activation of the waterflow alarm device shall result in an audible alarm within 5 minutes after such flow begins and until such flow stops. **13.2.4.2** Activation of the initiating device shall occur within 90 seconds of waterflow at the alarm-initiating device when flow occurs that is equal to or greater than that from a single sprinkler of the smallest orifice size installed in the system. [**72**:17.3.2]
	Recommended Text if Motion Fails: **13.2.4 Waterflow Alarm Devices.** **13.2.4.1** Where a waterflow alarm device is not connected to a fire alarm system, an audible alarm shall be received within 5 minutes of waterflow initiation or simulated waterflow initiation. **13.2.4.2** Where a waterflow alarm device is connected to a fire alarm system, an audible alarm shall be received within the timeframe required by NFPA 72 or locally adopted fire alarm code. **13.2.4.3 Mechanical Waterflow Alarm Devices, Including, but Not Limited to, Water Motor Gongs.** **13.2.4.3.1** Mechanical waterflow alarm devices shall be inspected quarterly to verify that they are free of physical damage **13.2.4.3.2** Mechanical waterflow alarm devices shall be tested quarterly. **13.2.4.4 Vane-Type, Paddle-Type, and Pressure-Switch-Type Waterflow Devices.** **13.2.4.4.1** Vane-type, paddle-type, and pressure-switch-type waterflow alarm devices shall be inspected quarterly to verify that they are free of physical damage. **13.2.4.4.2** Vane-type, paddle-type, and pressure-switch-type waterflow alarm devices shall be tested semiannually. **13.2.4.5** Testing waterflow alarm devices on wet pipe systems shall be accomplished by opening the inspector's test valve or by using the automated test equipment in accordance with 4.6.6. **13.2.4.6** Where freezing weather conditions or other circumstances prohibits the use of the inspector's test valve, the bypass connection shall be permitted to be used. **13.2.4.7** Fire pumps shall not be taken out of service during testing unless constantly attended by qualified personnel, or all impairment procedures contained in Chapter 15 are followed. **13.2.4.8*** Testing waterflow alarm devices on dry pipe, preaction, or deluge systems shall be accomplished by using the bypass connection.

Motion Seq#	**Certified Amending Motion:** Accept Public Comment No. 60
25 – 5	**Recommended Text if Motion Passes:** **G.3 Model Tagging Ordinance.** The following section provides a model tagging ordinance that can be adopted jurisdictionally as part of state, county, or local requirements. **G.3.1 Color-Coded System Status Tagging.** **G.3.1.1 Minimum Requirements.** **G.3.1.1.1** Whenever inspection, testing, repair, replacement, or adjustment of water-based fire protection systems or components are conducted in accordance with the requirements of the adopted edition of NFPA 25, a color-coded tag shall be attached to the system in accordance with this ordinance. **G.3.1.1.2** Tags shall be made of weatherproof and colorfast material of sufficient durability to meet the lifespan requirements of G.3.1.2.1.2. **G.3.1.1.3** Tags shall be a minimum size of 5.25 in (113 mm) in height and 2.625 in (67 mm) in width. **G.3.1.1.4** Information contained on the tag shall be in accordance with 4.3.1 and this ordinance. **G.3.1.1.4.1** The date of the inspection, test, repair, replacement, or adjustment shall be indicated by a hole punched in the tag in the appropriate location. **G.3.1.1.4.2** All information on the tag shall be legible. **G.3.1.1.5** Tags shall clearly identify the system or component they represent. **G.3.1.1.6** Tags shall contain a summary of all deficiencies, impairments, repairs, replacements, or adjustments in such detail as necessary to adequately describe the type, location, and number of deficiencies or impairments, or the specific nature, quantity, location, and results of repair(s), replacement(s), or adjustment(s) conducted. **G.3.1.1.6.1** Multiple tags shall be permitted to be used to meet this requirement. **G.3.1.1.6.2** The use of “see report” or similar references shall not be permitted. [OPTIONAL] **G.3.1.2 Attachment of Tags.** **G.3.1.2.1** Tags shall be attached immediately upon completion of the activity described in G.3.1.1.1. **G.3.1.2.1.1** Inspections or tests occurring quarterly or more frequently (i.e. monthly, weekly, and daily) shall not be required to comply with G.3.1.2.1. **G.3.1.2.1.2** Tags shall remain affixed to the system in accordance with 4.3.4 and 4.3.5. **G.3.1.2.1.3** Tags shall only be attached or removed by qualified personnel. **G.3.1.2.2** Tags shall be attached to the system riser, main control valve, or other location that permits convenient inspection and does not hamper the system’s actuation or operation. **G.3.1.2.2.1** When the timing of inspections, tests, repair, replacement, or adjustment is such that multiple tags are required on a system, tags shall be attached in chronological order with the most recent tag on top. **G.3.1.2.2.2** Where multiple deficiencies or impairments are identified, a tag representing the most severe (i.e. critical deficiency versus noncritical deficiency) condition shall be attached and the presence of additional, less-severe conditions indicated on separate tags. **G.3.1.3 Compliance (Green) Tag.** **G.3.1.3.1** If, following the completion of inspection or testing, no deficiencies or impairments have been identified, a compliance tag shall be attached in accordance with G.3.1.1 and G.3.1.2. **G.3.1.3.2** Compliance tags shall be green in color and shall state the words “COMPLIANCE TAG” prominently on the face of the tag.

25-5	**G.3.1.4 Noncritical Deficiency (Yellow) Tag.** **G.3.1.4.1** If, following the completion of inspection or testing, noncritical deficiencies have been identified, a noncritical deficiency tag shall be attached in accordance with G.3.1.1 and G.3.1.2 and those conditions recorded on the ITM report. **G.3.1.4.2** Noncritical deficiency tags shall be yellow in color with the words “NONCRITICAL DEFICIENCY TAG” printed prominently on the face of the tag. **G.3.1.5 Critical Deficiency (Orange) Tag.** **G.3.1.5.1** If, following the completion of inspection or testing, critical deficiencies have been identified, a critical deficiency tag shall be attached in accordance with G.3.1.1 and G.3.1.2 and those conditions recorded on the ITM report. **G.3.1.5.2** Critical deficiency tags shall be orange in color with the words “CRITICAL DEFICIENCYTAG” printed prominently on the face of the tag. **G.3.1.6 Impairment (Red) Tag.** **G.3.1.6.1** If, following the completion of inspection or testing, impairments have been identified, an impairment tag shall be attached in accordance with G.3.1.1 and G.3.1.2 and those conditions recorded on the ITM report. **G.3.1.6.2** Impairment tags shall be red in color with the words “IMPAIRMENT TAG” and “The presence of this tag indicates a DANGEROUS situation requiring immediate corrective action” printed prominently on the face of the tag. **G.3.1.6.3** The requirements of G.3.1.6 do not replace or negate those of Chapter 15. **G.3.1.7 Repair or Replacement (White) Tag.** **G.3.1.7.1** When repair, replacement, or adjustment to address deficiencies or impairments occurs, a repair/replacement tag shall be attached in accordance with G.3.1.1 and G.3.1.2 and those repairs, replacements, or adjustments recorded on the ITM report. **G.3.1.7.2** Repair/replacement tags shall be white in color and shall state the words “REPAIR/REPLACEMENT TAG” prominently on the face of the tag. **G.3.1.7.3** Repair/replacement tags shall not be attached until actions required by NFPA 25 Tables 5.5.1, 6.5.1, 7.5.1, 8.6.1, 9.6.1, 10.5.1, 11.5.1 and 13.11.1 are completed. **G.3.1.8 Tag Maintenance.** Tags shall be maintained by owner for a minimum of 1 year after all cited deficiencies and impairments have been corrected.
	Recommended Text if Motion Fails: The proposed text is not recommended for inclusion in the 2020 edition of NFPA 25.

Motion Seq #	NITMAM Log #	Section/Para	Person(s) Authorized to Make the Motion	Certified Amending Motion**	Motion Page #
302-1	2	4.1.6.1	Marcelo Hirschler, GBH International	Accept Public Comment No. 3	12
302-2	3	4.1.6.2	Marcelo Hirschler, GBH International	Accept Public Comment No. 4	13
302-3	6	5.5.3.2.1	Marcelo Hirschler, GBH International	Accept an Identifiable Part of Public Comment No. 5	14
302-4	4	5.5.3.2.2	Marcelo Hirschler, GBH International	Accept an Identifiable Part of Public Comment No. 5	15
302-5	7	8.2.1	Marcelo Hirschler, GBH International	Accept Public Comment No. 6	16
302-6	5	10.13.1	Marcelo Hirschler, GBH International	Accept an Identifiable Part of Public Comment No. 7	17
302-7	8	10.13.1	Marcelo Hirschler, GBH International	Accept an Identifiable Part of Public Comment No. 7	1 8

Motion Seq#	**Certified Amending Motion:** Accept Public Comment No. 3
302-1	**Recommended Text if Motion Passes:** **4.1.6.1** Materials used for thermal and acoustical insulation in any compartment or enclosure containing an internal combustion engine or heater shall have a flame spread index of 75 or less <u>and a smoke-developed index of 450 or less,</u> when tested in accordance with ASTM E84, *Standard Test Method for Surface Burning Characteristics of Building Materials*.
	Recommended Text if Motion Fails: **4.1.6.1** Materials used for thermal and acoustical insulation in any compartment or enclosure containing an internal combustion engine or heater shall have a flame spread index of 75 or less, when tested in accordance with ASTM E84, *Standard Test Method for Surface Burning Characteristics of Building Materials*.

Motion Seq#	**Certified Amending Motion:** Accept Public Comment No. 4
302-2	**Recommended Text if Motion Passes:** **4.1.6.2** Material shall be listed and labeled ~~or listed~~ as having been tested ~~to meet the requirements of~~ in accordance with ASTM E84, *Standard Test Method for Surface Burning Characteristics of Building Materials*, to meet the requirements of 4.1.6.1. **Recommended Text if Motion Fails:** **4.1.6.2** Material shall be labeled or listed as having been tested to meet the requirements of ASTM E84, *Standard Test Method for Surface Burning Characteristics of Building Materials*.

Motion Seq#	**Certified Amending Motion:** Accept Identifiable Part of Public Comment No. 5
302-3	**Recommended Text if Motion Passes:** **5.5.3.2.1** Ducts for engine-cooling air shall have a flame spread index of 75 or less <u>and a smoke-developed index of 450 or less,</u> when tested in accordance with ASTM E84, *Standard Test Method for Surface Burning Characteristics of Building Materials*.
	Recommended Text if Motion Fails: **5.5.3.2.1** Ducts for engine-cooling air shall have a flame spread index of 75 or less, when tested in accordance with ASTM E84, *Standard Test Method for Surface Burning Characteristics of Building Materials*.

Motion Seq#	**Certified Amending Motion:** Accept an Identifiable Part of Public Comment No. 5
302-4	**Recommended Text if Motion Passes:** **5.5.3.2.2** Material used for ducts for engine-cooling air shall be listed and labeled ~~or listed~~ as having been tested in accordance with ~~to meet the requirements of~~ ASTM E84, *Standard Test Method for Surface Burning Characteristics of Building Materials*, to meet the requirements of 5.5.3.2.1.
	Recommended Text if Motion Fails: **5.5.3.2.2** Material used for ducts for engine-cooling air shall be labeled or listed as having been tested to meet the requirements of ASTM E84, *Standard Test Method for Surface Burning Characteristics of Building Materials*.

Motion Seq#	**Certified Amending Motion:** Accept Public Comment No. 6
302-5	**Recommended Text if Motion Passes:** **8.2.1** Exposed materials and finishes within 24 in. (61 cm) of heat-generating surfaces of appliances shall have a flame spread index of not more than 75 <u>and a smoke-developed index of not more than 450,</u> when tested in accordance with ASTM E84, *Standard Test Method for Surface Burning Characteristics of Building Materials*.
	Recommended Text if Motion Fails: **8.2.1** Exposed materials and finishes within 24 in. (61 cm) of heat-generating surfaces of appliances shall have a flame spread index of not more than 75 when tested in accordance with ASTM E84, *Standard Test Method for Surface Burning Characteristics of Building Materials*.

Motion Seq#	**Certified Amending Motion:** Accept an Identifiable Part of Public Comment No. 7
302-6	**Recommended Text if Motion Passes:** **10.13.1** All connections normally carrying current shall be made in enclosures with interior surfaces having a flame spread index ~~rating~~ of not more than 25, as tested in accordance with ASTM E84, *Standard Test Method for Surface Burning Characteristics of Building Materials*.
	Recommended Text if Motion Fails: **10.13.1** All connections normally carrying current shall be made in enclosures with interior surfaces having a flame spread rating of not more than 25 as tested in accordance with ASTM E84, *Standard Test Method for Surface Burning Characteristics of Building Materials*.

Motion Seq#	**Certified Amending Motion:** Accept an Identifiable Part of Public Comment No. 7
302-7	**Recommended Text if Motion Passes:** **10.13.1** All connections normally carrying current shall be made in enclosures with interior surfaces having a flame spread rating of not more than 25, and a smoke-developed index of not more than 450, as tested in accordance with ASTM E84, *Standard Test Method for Surface Burning Characteristics of Building Materials*.
	Recommended Text if Motion Fails: **10.13.1** All connections normally carrying current shall be made in enclosures with interior surfaces having a flame spread rating of not more than 25 as tested in accordance with ASTM E84, *Standard Test Method for Surface Burning Characteristics of Building Materials*.

Motion Seq #	NITMAM Log #	Section/Para	Person(s) Authorized to Make the Motion	Certified Amending Motion**	Motion Page #
654-1	7, 8, 9	2.3.3, 3.3.34, 4.4 (renumbered text)	Marcelo Hirschler, GBH International	**GROUP AMENDING MOTION**: Accept an Identifiable Part of Public Comment No. 10, and Accept Public Comment Nos. 11 and 9	20

Motion Seq#	**Certified Amending Motion:** Accept an Identifiable Part of Public Comment No. 10, and Accept Public Comment Nos. 11 and 9.
654-1	**Recommended Text if Motion Passes:** **2.3.3 ASTM Publications**. ASTM International, 100 Barr Harbor Drive, P.O. Box C700, West Conshohocken, PA 19428-2959. *ASTM E136, Standard Test Method for Behavior of Materials in a Vertical Tube Furnace at 750°C, 2016a.* *ASTM E1226, Standard Test Method for Explosibility of Dust Clouds, 2012a.* *ASTM E2019, Standard Test Method for Minimum Ignition Energy of a Dust Cloud in Air, 2003, reapproved 2013.* *ASTM E2652, Standard Test Method for Behavior of Materials in a Tube Furnace with a Cone-shaped Airflow Stabilizer, at 750°C, 2016.* **3.3.34~~*~~ Noncombustible Material.** ~~A material that, in the form in which it is used and under the conditions anticipated, will not ignite, support combustion, burn, or release flammable vapors when subjected to fire or heat.~~ See Section 4.4 4.4* Noncombustible Material. A material that complies with any of the following shall be considered a noncombustible material: (1) A material that, in the form in which it is used and under the conditions anticipated, will not ignite, burn, support combustion, or release flammable vapors when subjected to fire or heat (2) A material that is reported as passing ASTM E136, *Standard Test Method for Behavior of Materials in a Vertical Tube Furnace at 750°C* (3) A material that is reported as complying with the pass/fail criteria of ASTM E136 when tested in accordance with the test method and procedure in ASTM E2652, *Standard Test Method for Behavior of Materials in a Tube Furnace with a Cone-shaped Airflow Stabilizer, at 750°C.* NOTE: Text has been renumbered. **Recommended Text if Motion Fails (*Second Draft Text*):** **2.3.3 ASTM Publications.** ASTM International, 100 Barr Harbor Drive, P.O. Box C700, West Conshohocken, PA 19428-2959. ASTM E1226, *Standard Test Method for Explosibility of Dust Clouds*, 2012a.

	ASTM E2019, *Standard Test Method for Minimum Ignition Energy of a Dust Cloud in Air*, 2003, reapproved 2013. **3.3.34* Noncombustible Material.** A material that, in the form in which it is used and under the conditions anticipated, will not ignite, support combustion, burn, or release flammable vapors when subjected to fire or heat.

Motion Seq #	NITMAM Log #	Section/Para	Person(s) Authorized to Make the Motion	Certified Amending Motion**	Motion Page #
130-1	3	3.3.12	Marcelo Hirschler, GBH International	Reject Second Revision No. 23 and Reject an Identifiable Part of Second Revision No. 18.	23
130-2	2	Table B.9.2.4	Marcelo Hirschler, GBH International	Reject an Identifiable Part of Second Revision No. 19.	24

Motion Seq#	**Certified Amending Motion:** Reject Second Revision No. 23 and Reject an Identifiable Part of Second Revision No. 18
130-1	**Recommended Text if Motion Passes:** **3.3.12 Critical Velocity.** The minimum steady-state velocity of the ventilation airflow moving toward the fire within a tunnel ~~an enclosed trainway~~ or ~~enclosed~~ passageway that is required to prevent ~~control~~ backlayering at the fire site~~,~~. ~~such that a tenable environment is maintained along the path of egress upstream of the fire, and as required for designated points of safety~~.
	Recommended Text if Motion Fails (*Second Draft Text*): **3.3.12 Critical Velocity.** The minimum steady-state velocity of the ventilation airflow moving toward the fire within an enclosed trainway or enclosed passageway that is required to control backlayering at the fire site, such that a tenable environment is maintained along the path of egress upstream of the fire, and as required for designated points of safety.

Motion Seq#	**Certified Amending Motion:** Reject an Identifiable Part of Second Revision No. 19

130-2

Recommended Text if Motion Passes:

Table B.9.2.4 Summary of Measured and Estimated Heat Release Rates and Associated Context

Description	Peak Heat Release Rate (MW)	Time to Peak Heat Release Rate (min)	~~Materials and Ignition Context~~
EUREKA Intercity EUREKA Intercity (test 1992) [22]	12	25	~~German IC train with steel body with legacy interior materials. Ignition by 6.2 kg of accelerant. Tunnel air velocity 0.5 m/sec.~~
EUREKA Intercity Express (test 1992) [22]	19	80	~~German ICE train with steel body, with modern materials at the time of test. First ignition by 6.2 kg of accelerant, fire development ceases after 18 minutes. Second ignition source of 170 wood sticks and 12.3 kg of accelerant is added. Heat release rate below 10 MW for approximately 65–70 minutes. Tunnel air velocity 0.5 m/sec.~~
EUREKA Metro (test 1992) [22]	35	5	~~Aluminum body subway train. Seat materials of "latest" design at time of test, other interior materials of "former" design. Tunnel air velocity 0.5 m/sec.~~
Baku Metro (actual fire 1995) [23]	100 (Est)	30–45	~~Fire cause reported to be related to an electrical failure. Train approximately 30 years old, with 90% of interior materials estimated to be combustible.~~
METRO Commuter (test 2009–2012) [24]	76.7	12.7	~~X1 train dating to 1970s with original combustible interior lining and an additional fire load of 351 kg of luggage. Ignition by igniting 1L of petrol with burning fiberboard. Ventilation was applied throughout the test using a mobile ventilation unit with a volumetric flowrate of 60.3 m^3/sec.~~
METRO Commuter 'Refurbished' (test 2009–2012) [24]	77.4	118	~~"Refurbished X1" train to be similar to a modern C20 carriage for Stockholm metro. Original combustible interior surfaces were covered incombustible covering. Seats replaced with ones consistent with C20 carriages. First ignition was achieved by igniting 1L of petrol with burning fiberboard. After approximately 110 minutes, fire development had largely stopped. 10L of diesel was applied to 5 pieces of luggage that were then placed into the train car, with rapid ignition and fire development resulting from this second major introduced ignition source. Ventilation was applied throughout the test using a mobile ventilation unit with a volumetric flowrate of 60.3 m^3/sec.~~
Carleton Subway Car (test 2011) [25]	52.5	9	~~Legacy Korean subway car with interior materials dating to before modern fire safety guidelines. Tunnel exhaust fan system initially set to 66 m^3/sec and ramped up to 132 m^3/sec~~

			~~after 6 minutes. For ignition, a sand propane burner with an HRR of 75 kW for the first 3 minutes and 150 kW for the following 8 minutes was placed in the corner of the car.~~
Carleton Railway Car (test 2011) [25]	32	18	~~Legacy Korean railway car. Tunnel exhaust fan system initially set to 66 m^3/sec and ramped up to 132 m^3/sec after 3 minutes. For ignition, a sand propane burner with an HRR of 75 kW for the first 3 minutes and 150 kW for the following 8 minutes was placed in the corner of the car.~~
British Rail Sprinter (test) [26]	16	NA	~~Test details not published.~~
British Rail Sprinter (test) [26]	7	NA	~~Test details not published.~~
Australian Passenger Rail (test 2005) [27]	13	2.3	~~Carriage materials consist of a stainless steel shell with interior materials selected from salvaged and spare parts stock; it was not determined if the legacy interior materials were tested to any flammability standards. Ignition source was 1 kg of crumpled newspaper (approximately 170 kW) on the floor in a corner behind the end seat shell, ignited using a gas flame.~~

130 2

Recommended Text if Motion Fails (*Second Draft Text*):

Table B.9.2.4 Summary of Measured and Estimated Heat Release Rates and Associated Context

Description	Peak Heat Release Rate (MW)	Time to Peak Heat Release Rate (min)	Materials and Ignition Context
EUREKA Intercity EUREKA Intercity (test 1992) [22]	12	25	German IC train with steel body with legacy interior materials. Ignition by 6.2 kg of accelerant. Tunnel air velocity 0.5 m/sec.
EUREKA Intercity Express (test 1992) [22]	19	80	German ICE train with steel body, with modern materials at the time of test. First ignition by 6.2 kg of accelerant, fire development ceases after 18 minutes. Second ignition source of 170 wood sticks and 12.3 kg of accelerant is added. Heat release rate below 10 MW for approximately 65–70 minutes. Tunnel air velocity 0.5 m/sec.
EUREKA Metro (test 1992) [22]	35	5	Aluminum body subway train. Seat materials of “latest” design at time of test, other interior materials of “former” design. Tunnel air velocity 0.5 m/sec.
Baku Metro (actual fire 1995) [23]	100 (Est)	30–45	Fire cause reported to be related to an electrical failure. Train approximately 30 years old, with 90% of interior materials estimated to be combustible.
METRO Commuter (test 2009–2012) [24]	76.7	12.7	X1 train dating to 1970s with original combustible interior lining and an additional fire load of 351 kg of luggage. Ignition by igniting 1L of petrol with burning fiberboard. Ventilation was applied throughout the test using a mobile ventilation unit with a volumetric flowrate of 60.3 m^3/sec.

130 2	METRO Commuter 'Refurbished' (test 2009–2012) [24]	77.4	118	"Refurbished X1" train to be similar to a modern C20 carriage for Stockholm metro. Original combustible interior surfaces were covered incombustible covering. Seats replaced with ones consistent with C20 carriages. First ignition was achieved by igniting 1L of petrol with burning fiberboard. After approximately 110 minutes, fire development had largely stopped. 10L of diesel was applied to 5 pieces of luggage that were then placed into the train car, with rapid ignition and fire development resulting from this second major introduced ignition source. Ventilation was applied throughout the test using a mobile ventilation unit with a volumetric flowrate of 60.3 m^3/sec.
	Carleton Subway Car (test 2011) [25]	52.5	9	Legacy Korean subway car with interior materials dating to before modern fire safety guidelines. Tunnel exhaust fan system initially set to 66 m^3/sec and ramped up to 132 m^3/sec after 6 minutes. For ignition, a sand propane burner with an HRR of 75 kW for the first 3 minutes and 150 kW for the following 8 minutes was placed in the corner of the car.
	Carleton Railway Car (test 2011) [25]	32	18	Legacy Korean railway car. Tunnel exhaust fan system initially set to 66 m^3/sec and ramped up to 132 m^3/sec after 3 minutes. For ignition, a sand propane burner with an HRR of 75 kW for the first 3 minutes and 150 kW for the following 8 minutes was placed in the corner of the car.
	British Rail Sprinter (test) [26]	16	NA	Test details not published.
	British Rail Sprinter (test) [26]	7	NA	Test details not published.
	Australian Passenger Rail (test 2005) [27]	13	2.3	Carriage materials consist of a stainless steel shell with interior materials selected from salvaged and spare parts stock; it was not determined if the legacy interior materials were tested to any flammability standards. Ignition source was 1 kg of crumpled newspaper (approximately 170 kW) on the floor in a corner behind the end seat shell, ignited using a gas flame.
	[Third column of table remains]			

Motion Seq #	NITMAM Log #	Section/Para	Person(s) Authorized to Make the Motion	Certified Amending Motion**	Motion Page #
502-1	5	4.8	Marcelo Hirschler, GBH International	Accept Public Comment No. 1	28
502-2	4	12.1.2	Marcelo Hirschler , GBH International	Reject an Identifiable Part of Second Revision No. 6.	29

Motion Seq#	**Certified Amending Motion:** Accept Public Comment No. 1**.**
502-1	**Recommended Text if Motion Passes:** **4.8 Noncombustible Material.** **4.8.1*** A material that complies with any one of the following shall be considered a noncombustible material: (1)* The material, in the form in which it is used and under the conditions anticipated, will not ignite, burn, support combustion, or release flammable vapors, when subjected to fire or heat. (2) The material is reported as passing ASTM E136, *Standard Test Method for Behavior of Materials in a Vertical Tube Furnace at 750°C.* (3) The material is reported as complying with the pass/fail criteria of ASTM E136 when tested in accordance with the test method and procedure in ASTM E2652, *Standard Test Method for Behavior of Materials in a Tube Furnace with a Cone-shaped Airflow Stabilizer, at 750°C.* ~~(4) The material is reported as complying with the pass/fail criteria of EN 13501-1, *Fire classification of construction products and building elemelements — Part 1: Classification using data from reaction to fire test*, in relation to ISO 1182, *Reaction to fire tests for products — Non-combustibility test.*~~
	Recommended Text if Motion Fails (*Second Draft Text*): **4.8* Noncombustible Material**. A material that complies with any one of the following shall be considered a noncombustible material: (1)* The material, in the form in which it is used and under the conditions anticipated, will not ignite, burn, support combustion, or release flammable vapors, when subjected to fire or heat. (2) The material is reported as passing ASTM E136, *Standard Test Method for Behavior of Materials in a Vertical Tube Furnace at 750°C.* (3) The material is reported as complying with the pass/fail criteria of ASTM E136 when tested in accordance with the test method and procedure in ASTM E2652, *Standard Test Method for Behavior of Materials in a Tube Furnace with a Cone-shaped Airflow Stabilizer, at 750°C.* (4) The material is reported as complying with the pass/fail criteria of EN 13501-1, *Fire classification of construction products and building elements — Part 1: Classification using data from reaction to fire test*, in relation to ISO 1182, *Reaction to fire tests for products — Non-combustibility test*.

Motion Seq#	**Certified Amending Motion:** Reject an Identifiable Part of Second Revision No. 6
502-2	**Recommended Text if Motion Passes:** **12.1.2** Emergency circuits installed in a road tunnel and ancillary areas shall remain functional for a period of not less than 1 hour for the anticipated fire condition by one of the following methods: (1) *Fire-resistive cables shall be approved or listed for no less than 2 hours when tested to the time-temperature curve of ASTM E119, *Standard Test Methods for Fire Tests of Building Construction and Materials*, in accordance with ANSI/UL 2196, *Standard for Fire Test for Circuit Integrity of Fire-Resistive Power, Instrumentation, Control, and Data Cables*, ~~or other approved, recognized standards,~~ as follows: (a) Fire-resistive cables shall be tested as a complete system, in both vertical and horizontal orientations, on conductors, cables, and raceways as applicable. (b) Fire-resistive cables intended for installation in a raceway shall be tested in the type of raceway in which they are intended to be installed. (c) Each fire-resistive cable system shall have installation instructions that describe the tested assembly with only the components included in the tested assembly acceptable for installations. (2) *Circuits shall be protected by a 2-hour fire barrier system in accordance with UL 1724, *Outline of Investigation for Fire Tests for Electrical Circuit Protective Systems*. The cables or conductors shall maintain functionality at the operating temperature within the fire barrier system. (3) They shall remain functional by the routing of the cable system external to the roadway. (4) They shall remain functional by using diversity in system routing as approved, such as separate redundant or multiple circuits separated by a 2-hour fire barrier, so that a single fire or emergency event will not lead to a failure of the system.
	Recommended Text if Motion Fails (*Second Draft Text*): **12.1.2** Emergency circuits installed in a road tunnel and ancillary areas shall remain functional for a period of not less than 1 hour for the anticipated fire condition by one of the following methods: (1) *Fire-resistive cables shall be approved or listed for no less than 2 hours when tested to the time-temperature curve of ASTM E119, *Standard Test Methods for Fire Tests of Building Construction and Materials*, in accordance with ANSI/UL 2196, *Standard for Fire Test for Circuit Integrity of Fire-Resistive Power, Instrumentation, Control, and Data Cables*, or other approved, recognized standards, as follows: (a) Fire-resistive cables shall be tested as a complete system, in both vertical and horizontal orientations, on conductors, cables, and raceways as applicable. (b) Fire-resistive cables intended for installation in a raceway shall be tested in the type of raceway in which they are intended to be installed.

(c) Each fire-resistive cable system shall have installation instructions that describe the tested assembly with only the components included in the tested assembly acceptable for installations.

(2) *Circuits shall be protected by a 2-hour fire barrier system in accordance with UL 1724, *Outline of Investigation for Fire Tests for Electrical Circuit Protective Systems*. The cables or conductors shall maintain functionality at the operating temperature within the fire barrier system.

(3) They shall remain functional by the routing of the cable system external to the roadway.

(4) They shall remain functional by using diversity in system routing as approved, such as separate redundant or multiple circuits separated by a 2-hour fire barrier, so that a single fire or emergency event will not lead to a failure of the system.

Motion Seq #	NITMAM Log #	Section/Para	Person(s) Authorized to Make the Motion	Certified Amending Motion**	Motion Page #
1961-1	8	7.3.4.2	Kathy Crosby-Bell, Last Call Foundation Designated Rep: Lon Fredric Palitz	Reject an Identifiable Part of Second Revision No. 9	32

Motion Seq#	**Certified Amending Motion:** Reject an Identifiable Part of Second Revision No. 9
1961-1	**Recommended Text if Motion Passes:** **7.3.4.2.3.1** The test results shall be reported by the hose manufacturers ~~to hose purchasers upon request~~. **7.3.4.2.4.1** The test results shall be reported by the hose manufacturers ~~to hose purchasers upon request~~.
	Recommended Text if Motion Fails (Second Draft Text): **7.3.4.2.3.1** The test results shall be reported by the hose manufacturers to hose purchasers upon request. **7.3.4.2.4.1** The test results shall be reported by the hose manufacturers to hose purchasers upon request.

Motion Seq #	NITMAM Log #	Section/Para	Person(s) Authorized to Make the Motion	Certified Amending Motion**	Motion Page #
1851-1	2	11.1.6	Jeffrey Stull, International Personnel Protection, Inc.	Reject Second Revision No. 37	34

Motion Seq#	**Certified Amending Motion**: Reject Second Revision No. 37
1851 -1	**Recommended Text if Motion Passes:** ~~**11.1.6** Organizations or ISPs verified to the 2014 edition of NFPA 1851 shall comply with the requirements for demonstrating cleaning and sanitization effectiveness specified in 11.3.7 within 24 months of the NFPA effective date for the 2020 edition, which is August 25, 2019.~~
	Recommended Text if Motion Fails: **11.1.6** Organizations or ISPs verified to the 2014 edition of NFPA 1851 shall comply with the requirements for demonstrating cleaning and sanitization effectiveness specified in 11.3.7 within 24 months of the NFPA effective date for the 2020 edition, which is August 25, 2019.

Motion Seq #	NITMAM Log #	Section/Para	Person(s) Authorized to Make the Motion	Certified Amending Motion**	Motion Page #
58-1	6	7.3.4	Theodore Lemoff, TLemoff Engineering	Reject Second Revision No. 69	36

Motion Seq#	**Certified Amending Motion:** Reject Second Revision No. 69
58-1	**Recommended Text if Motion Passes:** **7.3.4*** Purging of Piping. ~~Purging of piping shall be in accordance with NFPA 54, regardless of the system's operating pressure~~. **7.3.4.1** Purging of piping with a design pressure up to 125 psig (0.86 MPag) shall be in accordance with NFPA 54. **7.3.4.2** Purging of piping with a design pressure greater than 125 psig (0.86 MPag) shall be in accordance with NFPA 56.
	Recommended Text if Motion Fails (*Second Draft Text*): The current edition text will remain unchanged. **7.3.4*** Purging of Piping. Purging of piping shall be in accordance with NFPA 54, regardless of the system's operating pressure.

Motion Seq #	NITMAM Log #	Section/Para	Person(s) Authorized to Make the Motion	Certified Amending Motion**	Motion Page #
801 - 1	2	6.1.6, A.6.1.6	Jim Peterkin, TLC Engineering	Reject Second Revision No. 1	38

Motion Seq #	**Certified Amending Motion:** Reject Second Revision No. 1
801-1	**Recommended Text if Motion Passes:** ~~**6.1.6*** Integrated fire protection systems shall be tested in their entirety (end-to-end).~~ ~~**A.6.1.6** Integrated fire protection systems should be tested in accordance with NFPA 4 or equivalent standards.~~
	Recommended Text if Motion Fails (*Second Draft Text*): **6.1.6*** Integrated fire protection systems shall be tested in their entirety (end-to-end). **A.6.1.6** Integrated fire protection systems should be tested in accordance with NFPA 4 or equivalent standards.

Motion Seq #	NITMAM Log #	Section/Para	Person(s) Authorized to Make the Motion	Certified Amending Motion**	Motion Page #
855-1	31 2	1.1 1.1	Sue Vogel, IEEE Timothy Croushore, Edison Electric Institute (Designated Representative: John Houston, Southern Company Services	**Multiple Notices for a Single Motion:** Accept Public Comment Nos. 912 and 454	40
855-2	44	1.1	Chris Searles, BAE Batteries USA	Accept an Identifiable Part of Public Comment No. 410	41
855-3	14 20	1.1 1.1	Michael Buckley, Edison Electric Institute Robert Harris, NRECA	**Multiple Notices for a Single Motion:** Accept Public Comment Nos. 462 and 206	42
855-4	6	1.1	Michael Buckley, Edison Electric Institute	Accept Public Comment No. 458	43
855-5	10	1.1	James Houston, Southern Company Services	Accept Public Comment No. 9	44
855-6	12	1.1	Paul Hayes, American Fire Technologies	Accept Public Comment No. 180	45
855-7	58	1.2	Timothy Myers, Exponent Inc.	Accept Public Comment No. 138	46
855-8	21 53 45 63	4.6.2 4.6.2 4.6.2 4.6.2	David Grinder, Saft America Ned West, Southern Company William Cantor, TPI Timothy Myers, Exponent Inc.	**Multiple Notices for a Single Motion:** Reject an Identifiable Part of Second Revision No. 75	47
855-9	59	New Section after 4.11	Paul Hayes, American Fire Technologies	Accept Public Comment No. 283	48
855-10	61	4.11.2.1, 4.11.2.2	Paul Hayes, American Fire Technologies	Reject Second Revision No. 100	49
855-11	74	Annex F	Timothy Myers, Exponent Inc.	Reject Second Revision No. 173	51
855-12	65 72	1.2 1.3	Chris Searles, BAE Batteries USA Timothy Myers, Exponent, Inc.	**Multiple Notices for a Single Motion**: Return Entire NFPA Standard	68

Motion Seq#	**Certified Amending Motion:** Accept Public Comment Nos. 912 and 454
855 - 1	**Recommended Text if Motion Passes:** **1.1* Scope.** **1.1.1 Covered**. This standard applies to the design, construction, installation, commissioning, operation, maintenance, and decommissioning of stationary energy storage systems (ESS), including mobile and portable ESS installed in a stationary configuration. **1.2.1 Not Covered**. This standard does not cover ESS installations under the exclusive control of an electric utility where such installations are installed in accordance with the National Electrical Safety Code-ANSI-C2.
	Recommended Text if Motion Fails: **1.1* Scope.** This standard applies to the design, construction, installation, commissioning, operation, maintenance, and decommissioning of stationary energy storage systems (ESS), including mobile and portable ESS installed in a stationary configuration.

Motion Seq#	**Certified Amending Motion:** Accept an Identifiable Part of Public Comment No. 410
855 - 2	**Recommended Text if Motion Passes:** **1.1* Scope.** **1.1.1** This standard applies to the design, construction, installation, commissioning, operation, maintenance, and decommissioning of stationary energy storage systems (ESS), including mobile and portable ESS installed in a stationary configuration. **1.1.2** <u>The scope excludes lead-acid and nickel-cadmium batteries used in stationary standby power applications in commercial and industrial applications.</u>
	Recommended Text if Motion Fails: **1.1* Scope.** This standard applies to the design, construction, installation, commissioning, operation, maintenance, and decommissioning of stationary energy storage systems (ESS), including mobile and portable ESS installed in a stationary configuration.

Motion Seq#	**Certified Amending Motion:** Accept Public Comment Nos. 462 and 206
855 - 3	**Recommended Text if Motion Passes:** **1.1* Scope.** This standard applies to the design, construction, installation, commissioning, operation, maintenance, and decommissioning of stationary energy storage systems (ESS), including mobile and portable ESS installed in a stationary configuration, and excluding the following battery applications where state and local statutes require utilities to comply with National Electrical Safety Code-ANSI-C2: (1) Switchgear control and protection batteries (2) Generating plant control and protection batteries (3) Grid storage batteries not located in or near occupied structures
	Recommended Text if Motion Fails: **1.1* Scope.** This standard applies to the design, construction, installation, commissioning, operation, maintenance, and decommissioning of stationary energy storage systems (ESS), including mobile and portable ESS installed in a stationary configuration.

Motion Seq#	**Certified Amending Motion:** Accept Public Comment No. 458
855 - 4	**Recommended Text if Motion Passes:** **1.1* Scope.** **1.1.1** This standard applies to the design, construction, installation, commissioning, operation, maintenance, and decommissioning of stationary energy storage systems (ESS), including mobile and portable ESS installed in a stationary configuration. **1.1.2** <u>This standard does not apply to generation facilities, substation facilities, or equipment associated with generation, control, transformation, transmission, or distribution of energy installations that is under the exclusive control of an electric utility or lawfully designated agency.</u>
	Recommended Text if Motion Fails: **1.1* Scope.** This standard applies to the design, construction, installation, commissioning, operation, maintenance, and decommissioning of stationary energy storage systems (ESS), including mobile and portable ESS installed in a stationary configuration.

Motion Seq#	Certified Amending Motion: Accept Public Comment No. 9
855 - 5	**Recommended Text if Motion Passes:** **1.1* Scope.** This standard applies to the design, construction, installation, commissioning, operation, maintenance, and decommissioning of stationary energy storage systems (ESS), including mobile and portable ESS installed in a stationary configuration, <u>that are not required by law to comply with National Electrical Safety Code-ANSI-C2.</u>
	Recommended Text if Motion Fails: **1.1* Scope.** This standard applies to the design, construction, installation, commissioning, operation, maintenance, and decommissioning of stationary energy storage systems (ESS), including mobile and portable ESS installed in a stationary configuration.

Motion Seq#	**Certified Amending Motion:** Accept Public Comment No. 180
855 - 6	**Recommended Text if Motion Passes:** **1.1* Scope.** **1.1.1** This standard applies to the design, construction, installation, commissioning, operation, maintenance, and decommissioning of stationary energy storage systems (ESS), including mobile and portable ESS installed in a stationary configuration. **1.1.2** It shall not apply to equipment associated with the generation, control, transformation, transmission, or distribution of energy installations that is under the exclusive control of an electric utility or lawfully designated agency.
	Recommended Text if Motion Fails: **1.1* Scope.** This standard applies to the design, construction, installation, commissioning, operation, maintenance, and decommissioning of stationary energy storage systems (ESS), including mobile and portable ESS installed in a stationary configuration.

Motion Seq#	**Certified Amending Motion:** Accept Public Comment No. 138
855 - 7	**Recommended Text if Motion Passes:** **1.2** Purpose. This standard provides the minimum requirements for mitigating the electrical, fire, and explosion hazards associated with ESS.
	Recommended Text if Motion Fails: **1.2** Purpose. This standard provides the minimum requirements for mitigating the hazards associated with ESS.

Motion Seq#	**Certified Amending Motion:** Reject an Identifiable Part of Second Revision No. 75
855 - 8	**Recommended Text if Motion Passes:** **4.6.2** ESS shall be comprised of groups with a maximum stored energy of ~~50~~ 250 kWh each.
	Recommended Text if Motion Fails: **4.6.2** ESS shall be comprised of groups with a maximum stored energy of 50 kWh each.

Motion Seq#	**Certified Amending Motion:** Accept Public Comment No. 283
855 - 9	**Recommended Text if Motion Passes:** **4.12 Gas Detection**. Where required elsewhere in the Standard, rooms containing stationary storage battery systems shall be protected by a gas or off-gas detection system. The gas detection system shall be designed to activate where the level of flammable gas exceeds 25 percent of the lower flammable limit (LFL), or where the level of toxic or highly toxic gas exceeds one-half of the IDLH. **4.12.1** System activation of the gas detection system shall result in all the following: (1) Initiation of distinct audible and visible alarms in the battery storage room. (2) Transmission of an alarm to an approved location. (3) De-energizing of the battery charger. (4) Activation of the mechanical ventilation system, where the system is interlocked with the gas detection system per 4.9.3. **4.12.2** Facilities with lead-acid and nickel-cadmium stationary storage battery systems less than 50 v ac, 60 v dc shall not be required to provide gas detection.
	Recommended Text if Motion Fails: The proposed text is not recommended for inclusion in the 2020 edition of NFPA 855.

Motion Seq#	**Certified Amending Motion:** Reject Second Revision No. 100
855 – 10	**Recommended Text if Motion Passes:** **4.11.3** ~~Alternate Automatic Fire Control and Suppression Systems.~~ **4.11.3.1** Where other fixed ~~Other automatic~~ fire control and suppression systems are used to provide required protection, they shall be permitted based on reports issued as a result of large-scale fire testing as provided in ~~accordance with~~ 4.11.2 ~~4.1.5~~. ~~**A.4.11.3.1** UL 9540A Installation Level Test, Method 2, provides the data needed to determine if other fixed fire control and suppression systems are suitable for the application. Equivalent test standards, as permitted in 4.1.5, can provide comparable data.~~ **4.11.3.1.1*** Foam fire suppression systems shall be designed to provide a foam blanket or foam submergence until it can be demonstrated that the ESS has cooled to below the temperature that can cause thermal runaway and below the autoignition temperature of combustible material present. **A.4.11.3.1.1** Fire suppression system discharge durations should be held as long as the hazards of thermal runaway and autoignition of combustible material present exist. When foam suppression systems are used, full discharge tests should be completed to determine if the ESS will be submerged. Fencing with a maximum opening of 2 in.^{2} (1300 mm^2) or other barriers should be used when openings in the protected ESS enclosure are present. **4.11.3.1.1** Gaseous Agent Fire Suppression Systems. **4.11.3.1.1.1** Total flooding gaseous agent systems shall be designed based on the following factors including but not limited to: The agent concentrations required for the specific combustible materials involved The specific configuration of the equipment and enclosure **4.11.3.1.1.2*** Total flooding gaseous suppression systems shall be designed to maintain the design concentration within the enclosure for a time to ensure that the fire is extinguished and that temperatures of the ESS have cooled to below the autoignition temperature of combustible material present and the temperature that can cause thermal runaway as defined in the emergency operations plan. **A.4.3.1.1.2** Fire suppression system design concentrations and discharge durations should be held as long as the hazards of hot ESS components above the autoignition temperature and thermal runaway exist. The manufacturer should be consulted for applicable ESS cooldown times. It is recommended that the minimum discharge time be no less than twice the time demonstrated to achieve fire extinguishment and component cooldown for the suppressant used. Where design concentrations cannot be maintained effectively, an alternative system should be provided. **4.11.3.1.1.2** An operating device shall be available in an approved location such that fire services can begin exhaust prior to hold time expiration if deemed necessary. **4.11.3.1.1.3*** Local application gaseous agent suppression systems shall be designed to operate for a time sufficient to ensure that the fire is extinguished and that temperatures of the ESS have cooled to below the autoignition temperature of combustible material present and the temperature at which thermal runaway can occur. **A.4.11.3.1.1.3** Fire suppression system discharge durations should be held as long as the hazards of temperatures above the autoignition temperature and the temperature at which thermal runaway can occur. The manufacturer should be consulted for applicable ESS cooldown times. Information on fire tests that demonstrate the extinguishment time for an ESS should also be considered in determining the minimum discharge time. It is recommended that the minimum discharge time be no less than twice the time demonstrated to achieve fire extinguishment for the suppressant used. An extended discharge time is necessary to prevent potential fire reignition due to smoldering and heat soak. **4.11.3.1.2** Dry chemical fire suppression systems shall be designed to operate until it can be demonstrated that the ESS has cooled to below the

855-10	autoignition temperature of combustible material present and the temperature at which thermal runaway can occur. **4.11.3.1.3*** Water mist suppression systems shall be designed and installed in accordance with their listing for the specific hazards and protection objectives specified in the listing. **A.4.11.3.1.3** Water mist fire suppression systems need to be designed specifically for use with the size and configuration of the specific ESS installation or enclosure being protected. Currently there is no generic design method recognized for water mist systems. System features such as nozzle spacing, flow rate, drop size distribution, cone angle, and other characteristics need to be determined for each manufacturer's system through large-scale fire testing in accordance with Section to obtain a listing for each specific application and must be designed, installed, and tested in accordance with NFPA 750 . **4.11.3.2** Where other fixed ~~The automatic~~ fire control and suppression systems are used, they shall comply with the following standards, ~~or their equivalent,~~ as appropriate: (1) NFPA 12 (2) NFPA 15 (3) NFPA 750 (4) NFPA 2001 (5) NFPA 2010
	Recommended Text if Motion Fails: **4.11.3** Alternate Automatic Fire Control and Suppression Systems. **4.11.3.1*** Other automatic fire control and suppression systems shall be permitted based on reports issued as a result of large-scale fire testing in accordance with 4.1.5. **A.4.11.3.1** UL 9540A Installation Level Test, Method 2, provides the data needed to determine if other fixed fire control and suppression systems are suitable for the application. Equivalent test standards, as permitted in 4.1.5, can provide comparable data. **4.11.3.2*** The automatic fire control and suppression systems shall comply with the following standards, or their equivalent, as appropriate: (1) NFPA 12 (2) NFPA 15 (3) NFPA 750 (4) NFPA 2001 (5) NFPA 2010

Motion Seq#	**Certified Amending Motion:** Reject Second Revision No. 173
855 – 11	**Recommended Text if Motion Passes:** ~~**Annex F Fire and Building Codes — A Short History on Stationary Storage Battery Systems**~~ ~~This annex is not a part of the requirements of this NFPA document but is included for informational purposes only.~~ ~~**F.1 General.**~~ ~~The National Fire Protection Association's (NFPA) development of NFPA 855, Standard for the Installation of Stationary Energy Storage Systems, is not the first effort to address the safety of energy storage systems. Energy storage technologies have long been addressed by NFPA 70, National Electrical Code (NEC), along with building and fire codes under the topic stationary storage battery systems.~~ ~~More focused treatment of battery systems began with the 1997 edition of the ICC Uniform Fire Code (UFC). Before that various standards and model codes provided safety requirements that addressed batteries both as primary sources of electrical energy and for emergency backup power. Because of the amount of acid electrolyte in lead-acid batteries, when viewed in the aggregate and individually, they were being regulated for the hazardous material properties of the electrolyte, which then triggered more stringent high-hazard occupancy construction and protection requirements. As a result, the telecommunications industry sought a change to the UFC that addressed the operating hazards associated with batteries in their facilities without triggering the more stringent building and fire code requirements.~~ ~~This treatment of battery systems in building and fire codes based upon the chemistry and amount of electrolytes was uniform across the three legacy model codes produced by the Building Officials and Code Administrators International, International Conference of Building Officials, and Southern Building Code Congress International that existed prior to their merger and the creation of the International Code Council series of model codes completed in 2000.~~ ~~**F.2 Historical Development of Codes.**~~ ~~**F.2.1 1997 Uniform Fire Code.**~~ ~~Section 6401 of the 1997 edition of the Uniform Fire Code, based on approved modifications to the 1994 edition, contained the following requirements for stationary lead-acid battery systems:~~ ~~SECTION 6401 SCOPE. Stationary lead-acid battery systems having a liquid capacity of more than 100 gallons (378.5 L) used for facility standby power, emergency power or uninterrupted power supplies shall be in accordance with Article 64. Stationary lead-acid battery systems with individual lead-acid batteries exceeding 20 gallons (75.7 L) each shall also comply with Article 80. [UFC, 1997]~~ ~~The requirements addressed were as follows:~~ ~~(1) Safety venting~~ ~~(2) Occupancy separation~~ ~~(3) Spill control~~ ~~(4) Neutralization~~ ~~(5) Ventilation~~ ~~(6) Signs~~ ~~(7) Seismic protection~~ ~~(8) Smoke detection~~ ~~Note that the scope was not open ended. The individual battery limitation was set at 20 gallons and exceeding that amount per battery still triggered the more extensive hazardous material provisions in the UFC.~~

855 - 11	~~The topics addressed were based upon normal operation. Overcharging, thermal runaway, or other abnormal operational conditions were not considered, if in fact they were even recognized safety concerns at the time.~~ ~~**F.2.2 2000 International Code Council Codes.**~~ ~~The targeted regulation of stationary lead-acid battery systems that began with the 1997 Uniform Fire Code was carried forward as the three legacy model code organizations merged as the International Code Council and completed work on the development of, among others, the 2000 International Fire Code and 2000 International Building Code. The topics covered were as follows:~~ ~~(1) Safety venting~~ ~~(2) Room design and construction~~ ~~(3) Spill control and neutralization~~ ~~(4) Ventilation~~ ~~(5) Signs~~ ~~(6) Seismic protection~~ ~~(7) Smoke detection~~ ~~The threshold for application was reduced to 50 gal, and the 20 gal per battery limitation was eliminated compared to the 1997 UFC. In addition, the International Building Code classified the battery storage as incidental use areas and added an exemption from the high-hazard use classification. The purpose of the requirements was to provide for relief for certain battery system applications from being designated a high-hazard occupancy due to the amount of hazardous materials that were contained within the batteries. In practice, if a stationary lead-acid battery system satisfies these requirements then the facility containing those batteries is not regulated as a hazardous material occupancy and would not be designated a high-hazard use. That said, if the hazardous material maximum allowable quantities (MAQ) relative to the amount of electrolyte was exceeded then the battery system would result in a hazardous material classification.~~ ~~The requirements for stationary lead-acid battery systems were brought into the 2000 International Fire Code as Section 608 with the topics listed in F.2.2 addressed. For room design and construction, the user was pointed to the 2000 International Building Code where the battery systems were identified as an incidental use area and required to be separated from the remainder of the occupancy by fire resistance rated assemblies.~~ ~~As with the 1997 UFC, the topics addressed were based upon normal operation. Overcharging, thermal runaway, or other abnormal operating conditions were not considered or recognized at the time.~~ ~~**F.2.3 2003 International Code Council Codes and NFPA 1, Fire Code.**~~ ~~In Section 608 of the 2003 International Fire Code, the scope of lead-acid battery systems was changed to lead-acid battery systems using vented (flooded) lead-acid batteries. A new Section 609 was added to the IFC covering valve-regulated lead-acid battery systems and contained similar language. The requirements in the 2003 International Building Code remained the same applying to lead-acid batteries generally.~~ ~~Section 608 vented (flooded) lead-acid batteries covered the following:~~ ~~(1) Safety venting~~ ~~(2) Room design and construction~~ ~~(3) Spill control and neutralization~~ ~~(4) Ventilation~~ ~~(5) Signs~~ ~~(6) Seismic protection~~ ~~(7) Smoke detection~~ ~~Section 609 valve-regulated lead-acid battery systems covered the following:~~ ~~(1) Safety venting~~ ~~(2) Thermal runaway~~ ~~(3) Room design and construction~~ ~~(4) Spill control and neutralization~~

855 - 11	~~(5) Ventilation~~ ~~(6) Cabinet ventilation~~ ~~(7) Signs~~ ~~(8) Seismic protection~~ ~~(9) Smoke detection~~ ~~It should be noted that NFPA 1, Fire Code, did not have any requirements for stationary storage battery systems in the 2000 edition. The requirements were added to the 2003 edition of NFPA 1 from the same source used for the 2000 edition of the International Fire Code, the Uniform Fire Code, along with the added coverage of valve-regulated lead-acid batteries. The NFPA 1, Fire Code, battery storage provisions then remained unchanged until the 2009 edition.~~ ~~**F.2.4 2006 International Code Council Codes and NFPA 1, Fire Code.**~~ ~~In the 2006 edition of the International Fire Code (IFC), Section 608 was rewritten to cover the following:~~ ~~(1) Flooded lead-acid batteries~~ ~~(2) Flooded nickel-cadmium (Ni-Cad) batteries~~ ~~(3) Valve-regulated lead-acid (VRLA) batteries~~ ~~(4) Lithium-ion batteries~~ ~~This edition of the IFC signaled a recognition for and the introduction of new chemistries such as nickel-cadmium and lithium-ion batteries.~~ ~~The same general topics were covered in the revisions to the 2003 IFC that were implemented as the 2006 IFC, including the need for a separate room or space created in accordance with the building code. That said, beyond the separate room, only the IFC signage, seismic protection, and smoke detection requirements applied to the lithium-ion batteries. Figure F.2.4 provides the overview of the 2006 IFC provisions.~~ ~~Figure F.2.4 2006 International Fire Code Battery Requirements. (Source: 2006 International Fire Code.)~~

855 - 11

TABLE 608.1
BATTERY REQUIREMENTS

REQUIREMENT	NONRECOMBINANT BATTERIES		RECOMBINANT BATTERIES	
	Flooded Lead Acid Batteries	Flooded Nickel-Cadmium (Ni-Cd) Batteries	Valve Regulated Lead Acid (VRLA) Batteries	Lithium-Ion Batteries
Safety caps	Venting caps (608.2.1)	Venting caps (608.2.1)	Self-resealing flame-arresting caps (608.2.2)	No caps
Thermal runaway management	Not required	Not required	Required (608.3)	Not required
Spill control	Required (608.5)	Required (608.5)	Not required	Not required
Neutralization	Required (608.5.1)	Required (608.5.1)	Required (608.5.2)	Not required
Ventilation	Required (608.6.1; 608.6.2)	Required (608.6.1; 608.6.2)	Required (608.6.1; 608.6.2)	Not required
Signage	Required (608.7)	Required (608.7)	Required (608.7)	Required (608.7)
Seismic protection	Required (608.8)	Required (608.8)	Required (608.8)	Required (608.8)
Smoke detection	Required (608.9)	Required (608.9)	Required (608.9)	Required (608.9)

~~There were no changes made between the 2003 and the 2006 edition of NFPA 1, Fire Code. As such, it continued to apply only to the flooded lead-acid and valve-regulated lead-acid batteries.~~

~~F.2.5 2009 International Code Council Codes and NFPA 1, Fire Code.~~

~~The 2009 edition of NFPA 1, Fire Code, contained new provisions that added lithium-ion and nickel-cadmium technologies, and both NFPA 1(see Table F.2.5) and the IFC (see Figure F.2.5) contained new provisions that added lithium metal polymer batteries to the list of regulated battery technologies. The key difference in treatment between lithium-ion batteries and lithium metal polymer batteries was the requirement for thermal runaway protection for lithium metal polymer batteries. It should be noted that although Table 52.1 of the 2009 edition of NFPA 1 indicates no thermal runaway requirement for lithium-ion batteries, the technical language in 52.3.2 indicates thermal runaway was required for lithium-ion as well.~~

~~Thermal Runaway. VRLA and lithium-ion and lithium metal polymer battery systems shall be provided with a listed device or other approved method to preclude, detect, and control thermal runaway. [1:52.3.2, 2009]~~

~~A change to the International Building Code (IBC) unrelated to battery storage systems limited all incidental uses, the classification the IBC applies to battery systems, to no more than 10 percent of the area of the floor of the building they are located on.~~

~~Table F.2.5 Battery Requirements~~

~~Requirement~~	~~Nonrecombinant Batteries~~		~~Recombinant Batteries~~		~~Other~~
	~~Flooded Lead-Acid~~	~~Flooded Nickel-Cadmium (Ni-Cd)~~	~~Valve-Regulated Lead-Acid (VRLA)~~	~~Lithium-Ion~~	~~Lithium Metal Polymer~~
~~Safety caps~~	~~Venting caps~~	~~Venting caps~~	~~Self-resealing flame-arresting caps~~	~~No caps~~	~~No caps~~
~~Thermal runaway management~~	~~Not required~~	~~Not required~~	~~Required~~	~~Not required~~	~~Required~~
~~Spill control~~	~~Required~~	~~Required~~	~~Not required~~	~~Not required~~	~~Not required~~
~~Neutralization~~	~~Required~~	~~Required~~	~~Required~~	~~Not required~~	~~Not required~~
~~Ventilation~~	~~Required~~	~~Required~~	~~Required~~	~~Not required~~	~~Not required~~
~~Signage~~	~~Required~~	~~Required~~	~~Required~~	~~Required~~	~~Required~~
~~Seismic control~~	~~Required~~	~~Required~~	~~Required~~	~~Required~~	~~Required~~
855 - 11 ~~Fire detection~~	~~Required~~	~~Required~~	~~Required~~	~~Required~~	~~Required~~

~~[1:Table 52.1, 2009]~~

~~Figure F.2.5 2009 International Fire Code Battery Requirements. (Source: 2009 International Fire Code.)~~

TABLE 608.1
BATTERY REQUIREMENTS

REQUIREMENT	NONRECOMBINANT BATTERIES		RECOMBINANT BATTERIES		OTHER
	Flooded Lead Acid Batteries	Flooded Nickel-Cadmium (Ni-Cd) Batteries	Valve Regulated Lead-Acid (VRLA) Batteries	Lithium-Ion Batteries	Lithium Metal Polymer
Safety caps	Venting caps (608.2.1)	Venting caps (608.2.1)	Self-resealing flame-arresting caps (608.2.2)	No caps	No caps
Thermal runaway management	Not required	Not required	Required (608.3)	Not required	Required (608.3)
Spill control	Required (608.5)	Required (608.5)	Not required	Not required	Not required
Neutralization	Required (608.5.1)	Required (608.5.1)	Required (608.5.2)	Not required	Not required
Ventilation	Required (608.6.1; 608.6.2)	Required (608.6.1; 608.6.2)	Required (608.6.1; 608.6.2)	Not required	Not required
Signage	Required (608.7)	Required (608.7)	Required (608.7)	Required (608.7)	Required (608.7)
Seismic protection	Required (608.8)	Required (608.8)	Required (608.8)	Required (608.8)	Required (608.8)
Smoke detection	Required (608.9)	Required (608.9)	Required (608.9)	Required (608.9)	Required (608.9)

855 - 11

~~**F.2.6 2012 and 2015 International Code Council Codes and NFPA 1, Fire Code.**~~

~~Between the 2009 and 2012 editions of the fire codes, there were insignificant changes made to the requirements associated with battery systems. Between the 2012 and 2015 editions no changes were made. Essentially the 2009 and 2015 editions were the same with respect to battery systems.~~

~~**F.2.7 2018 International Code Council Codes and NFPA 1, Fire Code.**~~

~~Recognizing the development of new battery technologies and the evolution of battery storage into a more robust and wider energy storage industry in relation to the requirements in the various fire and building codes, the International Code Council's Fire Code Action Committee created an Energy Storage Systems Work Group (ESS WG). The work of the ESS WG resulted in a new chapter being approved for inclusion in the 2018 International Fire Code — Chapter 12, Energy Systems — into which all the key energy-storage-related requirements (including batteries) were moved including the following:~~

~~(1) Emergency and stand-by power systems~~
~~(2) Solar photovoltaic power systems~~
~~(3) Stationary fuel cell power systems~~
~~(4) Electrical energy storage systems~~

~~As part of this work the requirements of the former stationary storage battery systems chapter took on the broader application of electrical energy storage systems and addressed the following topics:~~

~~(1) Battery storage system threshold quantities~~
~~(2) Construction documents~~
~~(3) Hazard mitigation analysis~~
~~(4) Fault condition~~
~~(5) Thermal runaway~~
~~(6) Seismic and structural design~~
~~(7) Vehicle impact protection~~
~~(8) Combustible storage~~
~~(9) Testing, maintenance, and repair~~
~~(10) Location and construction~~
~~(11) Stationary battery arrays~~
~~(12) Outdoor installations~~
~~(13) Maximum allowable quantities~~
~~(14) Storage batteries and equipment~~
~~(15) Fire-extinguishing and detection systems~~
~~(16) Specific battery-type requirements~~
~~(17) Capacitor energy storage systems~~

~~A major change within this work of the IFC was the introduction of array (unit) spacing as follows:~~

~~1206.2.8.3 Stationary battery arrays. Storage batteries, prepackaged stationary storage battery systems and preengineered stationary storage battery systems shall be segregated into stationary battery arrays not exceeding 50 kWh (180 megajoules) each. Each stationary battery array shall be spaced not less than 3 feet (914 mm) from other stationary battery arrays and from walls in the storage room or area. The storage arrangements shall comply with Chapter 10. [IFC, 2018]~~

~~This is intended to restrict the amount of energy in arrays (units) and requires a larger footprint for an energy storage system installation due to the 3 ft separation requirement. Exceptions were provided that eliminate lead-acid and nickel-cadmium storage batteries from this limitation, allow listed prepackaged units to have a 250 kWh threshold for separation, and elimination of the limits based upon large-scale fire testing as follows:~~

~~Exceptions:~~

~~(1) Lead acid and nickel cadmium storage battery arrays.~~

855 - 11

~~(2) Listed preengineered stationary storage battery systems and prepackaged stationary storage battery systems shall not exceed 250 kWh (900 megajoules) each.~~

~~(3) The fire code official is authorized to approve listed, preengineered and prepackaged battery arrays with larger capacities or smaller battery array spacing if large-scale fire and fault condition testing conducted or witnessed and reported by an approved testing laboratory is provided showing that a fire involving one array will not propagate to an adjacent array, and be contained within the room for a duration equal to the fire-resistance rating of the room separation specified in Table 509 of the International Building Code.~~

~~[IFC, 2018]~~

~~The IFC relies upon 1- or 2-hour fire-resistant construction to separate systems from the remainder of the building and an assessment that that level of protection can contain the fire impacts within the room or space where a system is installed. A large-scale fire test is needed to document such containment.~~

~~The other significant change between the 2015 and 2018 IFC editions was the specification of a maximum allowable battery quantity (see Figure F.2.7).~~

~~Figure F.2.7 2018 International Fire Code Maximum Allowable Battery Quantities. (Source: 2018 International Fire Code.)~~

TABLE 1206.2.9
MAXIMUM ALLOWABLE BATTERY QUANTITIES

BATTERY TECHNOLOGY	MAXIMUM ALLOWABLE QUANTITIES[a]	GROUP H OCCUPANCY
Flow batteries[b]	600 kWh	Group H-2
Lead acid, all types	Unlimited	Not Applicable
Lithium, all types	600 kWh	Group H-2
Nickel cadmium (Ni-Cd)	Unlimited	Not Applicable
Sodium, all types	600 kWh	Group H-2
Other battery technologies	200 kWh	Group H-2[c]

~~For SI:1 kilowatt-hour = 3.6 megajoules.~~

a. For batteries rated in amp-hours, Kilowatt-hours (kWh) shall equal rated battery voltage times the amp-hour rating divided by 1,000.

b. Shall include vanadium, zinc-bromine, polysulfide-bromide, and other flowing electrolyte-type technologies.

c. Shall be a Group H-4 occupancy if the fire code official determines that a fire or thermal runaway involving the battery technology does not represent a significant fire hazard.

~~This was the first time there was an upper limit applied to the amount of energy allowed to be stored in an energy storage system located in a room or space. As with the spacing limitations, there was an exception that could be applied based upon large-scale fire testing as follows:~~

~~Exception: Where approved by the fire code official, areas containing stationary storage batteries that exceed the amounts in Table 1206.2.9 shall be treated as incidental use areas and not Group H occupancies based on a hazardous mitigation analysis in accordance with Section 1206.2.3 and large-scale fire and fault condition testing conducted or witnessed and reported by an approved testing laboratory. [IFC, 2018]~~

~~Along with the provisions in the 2018 IFC, energy storage language was added to the 2018 International Residential Code for the first time. In summary, the new language in the International Residential Code required energy storage systems to be listed and precluded them from being installed within the habitable space of a dwelling unit.~~

~~The 2018 NFPA 1, Fire Code, Chapter 52 contained modifications to the 2015 edition that were very similar to all of the new requirements introduced to the 2018 IFC.~~

~~F.2.8 2021 International Code Council Code Development and 2019 NFPA 855, Standard for the Installation of Stationary Energy Storage Systems.~~

~~While the code revision process was being completed for the 2018 editions of the IFC and NFPA 1, NFPA developed the new standard NFPA 855, Standard for the Installation of Stationary Energy Storage Systems. The work of the NFPA 855 technical committee closely tracked and utilized the 2018 language added to the fire codes along with the language from NFPA 853, Standard for the Installation of Stationary Fuel Cell Power Systems, for the initial NFPA 855 draft document.~~

855 - 11	~~With the adoption and availability of the 2018 editions of the codes, a broader audience was reached that generated additional input to the NFPA 855 committee on the impact of the requirements and questions on how to apply them in differing circumstances such as follows:~~ ~~(1) Roof installs~~ ~~(2) Open parking garage installs~~ ~~(3) Remote installations~~ ~~(4) Dedicated ESS buildings~~ ~~(5) Array (unit) spacing threshold~~ ~~(6) Maximum allowable quantity impact~~ ~~(7) Incidental use 10 percent of floor area limitation~~ ~~(8) Appropriate requirements based upon technology~~ ~~(9) Deflagration prevention/venting~~ ~~(10) Suppression system selection~~ ~~(11) Fire detection method and where required~~ ~~Going into the NFPA 855 First Draft process, language improvements were coordinated with work in progress on the proposals for the 2021 editions of the International Fire Code, International Building Code, and the International Residential Code.~~ ~~Key areas addressed by the current proposals approved by the ICC Fire Code Action Committee and the Fire Code Committee at the proposal hearings for the 2021 edition code change process were as follows:~~ ~~(1) Permits, operational as well as installation~~ ~~(2) Large-scale fire test reliance on new UL 9540A~~ ~~(3) Fire remediation actions and personnel~~ ~~(4) Commissioning~~ ~~(5) Decommissioning~~ ~~(6) Operation and maintenance~~ ~~(7) Repairs, retrofits, and replacements~~ ~~(8) Reused and repurposed equipment~~ ~~(9) Toxic and highly toxic gases~~ ~~(10) Security of installations~~ ~~(11) Occupied work centers~~ ~~(12) Walk-in units~~ ~~(13) Size and separation threshold reduction~~ ~~(14) Maximum allowable quantities as simply a testing trigger~~ ~~(15) Remote installations~~ ~~(16) Dedicated-use buildings designated as an F-1 Group use~~ ~~(17) Non-dedicated-use buildings~~ ~~(18) Elimination of incidental use 10 percent of floor area restriction and H Group designation~~ ~~(19) Explosion control~~ ~~(20) Outdoor installations~~ ~~(21) Rooftop installations~~ ~~(22) Open parking garage installations~~ ~~(23) Mobile ESS equipment and operations~~

855 - 11

~~Though some of the new language is more conservative, such as the threshold before large-scale fire testing and the requirement for explosion protection for lithium-ion energy storage systems, other proposed changes provide relief from some requirements such as dedicated-use buildings, remote locations, and rooftop and open parking garage installations.~~

~~The most restrictive requirements were maintained to address when an energy storage system is installed within a mixed-use occupancy building and it is important to contain an event for life safety and property protection.~~

~~The changes proposed for the 2021 I-Codes, and coordinated with the 2019 NFPA 855 development process, are significantly different from the 2018 provisions because of industry participation. The initial language of the 2018 editions of the fire codes and the draft of NFPA 855 are intended to obtain an acceptable level of safety recognizing how challenging and dynamic events from batteries and energy storage systems can be, whether the system instigates an issue or is a casualty of outside events. Those who verify code compliance and others working on the code language have maintained an open view, and where industry has provided data on different technologies and/or on documented safety practices, or a reduction in exposure hazards, there has been a willingness to modify the requirements in recognition of the new information and data.~~

~~F.3 NFPA Fire Protection Research Foundation.~~

~~There are a few research projects involving the NFPA Fire Protection Research Foundation, Factory Mutual, and Sandia National Laboratories and the Pacific Northwest National Laboratory on behalf of the DOE Office of Electricity Energy Storage Program, and others that have provided background and understanding for those involved in the code writing process. There are numerous other sources for information, however, the following sources are those best known to many of those involved in the code development process:~~

~~(1) NFPA — firefighter safety in battery energy storage system fires see http://www.nfpa.org/News-and-Research/Resources/Fire-Protection-Research-Foundation/Current-projects/Fire-Fighter-Safety-in-Battery-Energy-Storage-System-Fires~~

~~(2) NFPA — lithium-ion batteries hazard and use assessment see the following:~~

~~(a) "Lithium Ion Batteries Hazard and Use Assessment"~~

~~(b) "Lithium Ion Batteries Hazard and Use Assessment — Phase IIB — Flammability Characterization of Li-ion Batteries for Storage Protection"~~

~~(c) "Lithium Ion Batteries Hazard and Use Assessment — Phase III"~~

~~(3) DNV GL — considerations for energy storage systems fire safety see https://www.dnvgl.com/publications/considerations-for-energy-storage-systems-fire-safety-89415~~

~~(4) Sandia National Laboratory – energy storage see http://energy.sandia.gov/energy/ssrei/energy-storage/~~

~~When industry joined the code-development process, they successfully used additional data specific to their products and operations to bring validity and functionality to proposed code language. The increased industry participation will be a benefit moving forward.~~

Recommended Text if Motion Fails:

Annex F Fire and Building Codes — A Short History on Stationary Storage Battery Systems

This annex is not a part of the requirements of this NFPA document but is included for informational purposes only.

F.1 General.

The National Fire Protection Association's (NFPA) development of NFPA 855, Standard for the Installation of Stationary Energy Storage Systems, is not the first effort to address the safety of energy storage systems. Energy storage technologies have long been addressed by NFPA 70, National Electrical Code (NEC), along with building and fire codes under the topic stationary storage battery systems.

More focused treatment of battery systems began with the 1997 edition of the ICC Uniform Fire Code (UFC). Before that various standards and model codes provided safety requirements that addressed batteries both as primary sources of electrical energy and for emergency backup power. Because of the amount of acid electrolyte in lead-acid batteries, when viewed in the aggregate and individually, they were being regulated for the hazardous material properties of the electrolyte, which then triggered more stringent high-hazard occupancy construction and protection requirements. As a result, the telecommunications industry sought a change to the UFC that addressed the operating hazards associated with batteries in their facilities without triggering the more stringent building and fire code requirements.

855 - 11

This treatment of battery systems in building and fire codes based upon the chemistry and amount of electrolytes was uniform across the three legacy model codes produced by the Building Officials and Code Administrators International, International Conference of Building Officials, and Southern Building Code Congress International that existed prior to their merger and the creation of the International Code Council series of model codes completed in 2000.

F.2 Historical Development of Codes.

F.2.1 1997 Uniform Fire Code.

Section 6401 of the 1997 edition of the Uniform Fire Code, based on approved modifications to the 1994 edition, contained the following requirements for stationary lead-acid battery systems:

SECTION 6401 SCOPE. Stationary lead-acid battery systems having a liquid capacity of more than 100 gallons (378.5 L) used for facility standby power, emergency power or uninterrupted power supplies shall be in accordance with Article 64. Stationary lead-acid battery systems with individual lead-acid batteries exceeding 20 gallons (75.7 L) each shall also comply with Article 80. [UFC, 1997]

The requirements addressed were as follows:

(1) Safety venting
(2) Occupancy separation
(3) Spill control
(4) Neutralization
(5) Ventilation
(6) Signs
(7) Seismic protection
(8) Smoke detection

Note that the scope was not open ended. The individual battery limitation was set at 20 gallons and exceeding that amount per battery still triggered the more extensive hazardous material provisions in the UFC.

The topics addressed were based upon normal operation. Overcharging, thermal runaway, or other abnormal operational conditions were not considered, if in fact they were even recognized safety concerns at the time.

F.2.2 2000 International Code Council Codes.

The targeted regulation of stationary lead-acid battery systems that began with the 1997 Uniform Fire Code was carried forward as the three legacy model code organizations merged as the International Code Council and completed work on the development of, among others, the 2000 International Fire Code and 2000 International Building Code. The topics covered were as follows:

(1) Safety venting
(2) Room design and construction
(3) Spill control and neutralization
(4) Ventilation
(5) Signs
(6) Seismic protection
(7) Smoke detection

The threshold for application was reduced to 50 gal, and the 20 gal per battery limitation was eliminated compared to the 1997 UFC. In addition, the International Building Code classified the battery storage as incidental use areas and added an exemption from the high-hazard use classification.

The purpose of the requirements was to provide for relief for certain battery system applications from being designated a high-hazard occupancy due to the amount of hazardous materials that were contained within the batteries. In practice, if a stationary lead-acid battery system satisfies these requirements then the facility containing those batteries is not regulated as a hazardous material occupancy and would not be designated a high-hazard use. That said, if the hazardous material maximum allowable quantities (MAQ) relative to the amount of electrolyte was exceeded then the battery system would result in a hazardous material classification.

855 - 11

The requirements for stationary lead-acid battery systems were brought into the 2000 International Fire Code as Section 608 with the topics listed in F.2.2 addressed. For room design and construction, the user was pointed to the 2000 International Building Code where the battery systems were identified as an incidental use area and required to be separated from the remainder of the occupancy by fire resistance rated assemblies.

As with the 1997 UFC, the topics addressed were based upon normal operation. Overcharging, thermal runaway, or other abnormal operating conditions were not considered or recognized at the time.

F.2.3 2003 International Code Council Codes and NFPA 1, Fire Code.

In Section 608 of the 2003 International Fire Code, the scope of lead-acid battery systems was changed to lead-acid battery systems using vented (flooded) lead-acid batteries. A new Section 609 was added to the IFC covering valve-regulated lead-acid battery systems and contained similar language. The requirements in the 2003 International Building Code remained the same applying to lead-acid batteries generally.

Section 608 vented (flooded) lead-acid batteries covered the following:

(1) Safety venting
(2) Room design and construction
(3) Spill control and neutralization
(4) Ventilation
(5) Signs
(6) Seismic protection
(7) Smoke detection

Section 609 valve-regulated lead-acid battery systems covered the following:

(1) Safety venting
(2) Thermal runaway
(3) Room design and construction
(4) Spill control and neutralization
(5) Ventilation
(6) Cabinet ventilation
(7) Signs
(8) Seismic protection
(9) Smoke detection

It should be noted that NFPA 1, Fire Code, did not have any requirements for stationary storage battery systems in the 2000 edition. The requirements were added to the 2003 edition of NFPA 1 from the same source used for the 2000 edition of the International Fire Code, the Uniform Fire Code, along with the added coverage of valve-regulated lead-acid batteries. The NFPA 1, Fire Code, battery storage provisions then remained unchanged until the 2009 edition.

F.2.4 2006 International Code Council Codes and NFPA 1, Fire Code.

In the 2006 edition of the International Fire Code (IFC), Section 608 was rewritten to cover the following:

(1) Flooded lead-acid batteries
(2) Flooded nickel-cadmium (Ni-Cad) batteries
(3) Valve-regulated lead-acid (VRLA) batteries
(4) Lithium-ion batteries

This edition of the IFC signaled a recognition for and the introduction of new chemistries such as nickel-cadmium and lithium-ion batteries.

The same general topics were covered in the revisions to the 2003 IFC that were implemented as the 2006 IFC, including the need for a separate room or space created in accordance with the building code. That said, beyond the separate room, only the IFC signage, seismic protection, and smoke detection requirements applied to the lithium-ion batteries. Figure F.2.4 provides the overview of the 2006 IFC provisions.

Figure F.2.4 2006 International Fire Code Battery Requirements. (Source: 2006 International Fire Code.)

855 - 11

TABLE 608.1
BATTERY REQUIREMENTS

REQUIREMENT	NONRECOMBINANT BATTERIES		RECOMBINANT BATTERIES	
	Flooded Lead Acid Batteries	Flooded Nickel-Cadmium (Ni-Cd) Batteries	Valve Regulated Lead Acid (VRLA) Batteries	Lithium-Ion Batteries
Safety caps	Venting caps (608.2.1)	Venting caps (608.2.1)	Self-resealing flame-arresting caps (608.2.2)	No caps
Thermal runaway management	Not required	Not required	Required (608.3)	Not required
Spill control	Required (608.5)	Required (608.5)	Not required	Not required
Neutralization	Required (608.5.1)	Required (608.5.1)	Required (608.5.2)	Not required
Ventilation	Required (608.6.1; 608.6.2)	Required (608.6.1; 608.6.2)	Required (608.6.1; 608.6.2)	Not required
Signage	Required (608.7)	Required (608.7)	Required (608.7)	Required (608.7)
Seismic protection	Required (608.8)	Required (608.8)	Required (608.8)	Required (608.8)
Smoke detection	Required (608.9)	Required (608.9)	Required (608.9)	Required (608.9)

There were no changes made between the 2003 and the 2006 edition of NFPA 1, Fire Code. As such, it continued to apply only to the flooded lead-acid and valve-regulated lead-acid batteries.

F.2.5 2009 International Code Council Codes and NFPA 1, Fire Code.

The 2009 edition of NFPA 1, Fire Code, contained new provisions that added lithium-ion and nickel-cadmium technologies, and both NFPA 1(see Table F.2.5) and the IFC (see Figure F.2.5) contained new provisions that added lithium metal polymer batteries to the list of regulated battery technologies. The key difference in treatment between lithium-ion batteries and lithium metal polymer batteries was the requirement for thermal runaway protection for lithium metal polymer batteries. It should be noted that although Table 52.1 of the 2009 edition of NFPA 1 indicates no thermal runaway requirement for lithium-ion batteries, the technical language in 52.3.2 indicates thermal runaway was required for lithium-ion as well.

Thermal Runaway. VRLA and lithium-ion and lithium metal polymer battery systems shall be provided with a listed device or other approved method to preclude, detect, and control thermal runaway. [1:52.3.2, 2009]

A change to the International Building Code (IBC) unrelated to battery storage systems limited all incidental uses, the classification the IBC applies to battery systems, to no more than 10 percent of the area of the floor of the building they are located on.

Table F.2.5 Battery Requirements

855 - 11

Requirement	Nonrecombinant Batteries		Recombinant Batteries		Other
	Flooded Lead-Acid	Flooded Nickel-Cadmium (Ni-Cd)	Valve-Regulated Lead–Acid (VRLA)	Lithium-Ion	Lithium Metal Polymer
Safety caps	Venting caps	Venting caps	Self-resealing flame-arresting caps	No caps	No caps
Thermal runaway management	Not required	Not required	Required	Not required	Required
Spill control	Required	Required	Not required	Not required	Not required
Neutralization	Required	Required	Required	Not required	Not required
Ventilation	Required	Required	Required	Not required	Not required
Signage	Required	Required	Required	Required	Required
Seismic control	Required	Required	Required	Required	Required
Fire detection	Required	Required	Required	Required	Required

[1:Table 52.1, 2009]

Figure F.2.5 2009 International Fire Code Battery Requirements. (Source: 2009 International Fire Code.)

TABLE 608.1
BATTERY REQUIREMENTS

REQUIREMENT	NONRECOMBINANT BATTERIES		RECOMBINANT BATTERIES		OTHER
	Flooded Lead Acid Batteries	Flooded Nickel-Cadmium (Ni-Cd) Batteries	Valve Regulated Lead-Acid (VRLA) Batteries	Lithium-Ion Batteries	Lithium Metal Polymer
Safety caps	Venting caps (608.2.1)	Venting caps (608.2.1)	Self-resealing flame-arresting caps (608.2.2)	No caps	No caps
Thermal runaway management	Not required	Not required	Required (608.3)	Not required	Required (608.3)
Spill control	Required (608.5)	Required (608.5)	Not required	Not required	Not required
Neutralization	Required (608.5.1)	Required (608.5.1)	Required (608.5.2)	Not required	Not required
Ventilation	Required (608.6.1; 608.6.2)	Required (608.6.1; 608.6.2)	Required (608.6.1; 608.6.2)	Not required	Not required
Signage	Required (608.7)	Required (608.7)	Required (608.7)	Required (608.7)	Required (608.7)
Seismic protection	Required (608.8)	Required (608.8)	Required (608.8)	Required (608.8)	Required (608.8)
Smoke detection	Required (608.9)	Required (608.9)	Required (608.9)	Required (608.9)	Required (608.9)

855 - 11

F.2.6 2012 and 2015 International Code Council Codes and NFPA 1, Fire Code.

Between the 2009 and 2012 editions of the fire codes, there were insignificant changes made to the requirements associated with battery systems. Between the 2012 and 2015 editions no changes were made. Essentially the 2009 and 2015 editions were the same with respect to battery systems.

F.2.7 2018 International Code Council Codes and NFPA 1, Fire Code.

Recognizing the development of new battery technologies and the evolution of battery storage into a more robust and wider energy storage industry in relation to the requirements in the various fire and building codes, the International Code Council's Fire Code Action Committee created an Energy Storage Systems Work Group (ESS WG). The work of the ESS WG resulted in a new chapter being approved for inclusion in the 2018 International Fire Code — Chapter 12, Energy Systems — into which all the key energy-storage-related requirements (including batteries) were moved including the following:

(1) Emergency and stand-by power systems
(2) Solar photovoltaic power systems
(3) Stationary fuel cell power systems
(4) Electrical energy storage systems

As part of this work the requirements of the former stationary storage battery systems chapter took on the broader application of electrical energy storage systems and addressed the following topics:

(1) Battery storage system threshold quantities
(2) Construction documents
(3) Hazard mitigation analysis
(4) Fault condition
(5) Thermal runaway
(6) Seismic and structural design
(7) Vehicle impact protection
(8) Combustible storage
(9) Testing, maintenance, and repair
(10) Location and construction
(11) Stationary battery arrays
(12) Outdoor installations
(13) Maximum allowable quantities
(14) Storage batteries and equipment
(15) Fire-extinguishing and detection systems
(16) Specific battery-type requirements
(17) Capacitor energy storage systems

A major change within this work of the IFC was the introduction of array (unit) spacing as follows:

1206.2.8.3 Stationary battery arrays. Storage batteries, prepackaged stationary storage battery systems and preengineered stationary storage battery systems shall be segregated into stationary battery arrays not exceeding 50 kWh (180 megajoules) each. Each stationary battery array shall be spaced not less than 3 feet (914 mm) from other stationary battery arrays and from walls in the storage room or area. The storage arrangements shall comply with Chapter 10. [IFC, 2018]

This is intended to restrict the amount of energy in arrays (units) and requires a larger footprint for an energy storage system installation due to the 3 ft separation requirement. Exceptions were provided that eliminate lead-acid and nickel-cadmium storage batteries from this limitation, allow listed prepackaged units to have a 250 kWh threshold for separation, and elimination of the limits based upon large-scale fire testing as follows:

Exceptions:

(1) Lead acid and nickel cadmium storage battery arrays.

855 - 11

(2) Listed preengineered stationary storage battery systems and prepackaged stationary storage battery systems shall not exceed 250 kWh (900 megajoules) each.
(3) The fire code official is authorized to approve listed, preengineered and prepackaged battery arrays with larger capacities or smaller battery array spacing if large-scale fire and fault condition testing conducted or witnessed and reported by an approved testing laboratory is provided showing that a fire involving one array will not propagate to an adjacent array, and be contained within the room for a duration equal to the fire-resistance rating of the room separation specified in Table 509 of the International Building Code.
[IFC, 2018]
The IFC relies upon 1- or 2-hour fire-resistant construction to separate systems from the remainder of the building and an assessment that that level of protection can contain the fire impacts within the room or space where a system is installed. A large-scale fire test is needed to document such containment.
The other significant change between the 2015 and 2018 IFC editions was the specification of a maximum allowable battery quantity (see Figure F.2.7).
Figure F.2.7 2018 International Fire Code Maximum Allowable Battery Quantities. (Source: 2018 International Fire Code.)

TABLE 1206.2.9
MAXIMUM ALLOWABLE BATTERY QUANTITIES

BATTERY TECHNOLOGY	MAXIMUM ALLOWABLE QUANTITIES[a]	GROUP H OCCUPANCY
Flow batteries[b]	600 kWh	Group H-2
Lead acid, all types	Unlimited	Not Applicable
Lithium, all types	600 kWh	Group H-2
Nickel cadmium (Ni-Cd)	Unlimited	Not Applicable
Sodium, all types	600 kWh	Group H-2
Other battery technologies	200 kWh	Group H-2[c]

For SI:1 kilowatt hour = 3.6 megajoules.
a. For batteries rated in amp-hours, Kilowatt-hours (kWh) shall equal rated battery voltage times the amp-hour rating divided by 1,000.
b. Shall include vanadium, zinc-bromine, polysulfide-bromide, and other flowing electrolyte-type technologies.
c. Shall be a Group H-4 occupancy if the fire code official determines that a fire or thermal runaway involving the battery technology does not represent a significant fire hazard.

This was the first time there was an upper limit applied to the amount of energy allowed to be stored in an energy storage system located in a room or space. As with the spacing limitations, there was an exception that could be applied based upon large-scale fire testing as follows:
Exception: Where approved by the fire code official, areas containing stationary storage batteries that exceed the amounts in Table 1206.2.9 shall be treated as incidental use areas and not Group H occupancies based on a hazardous mitigation analysis in accordance with Section 1206.2.3 and large-scale fire and fault condition testing conducted or witnessed and reported by an approved testing laboratory. [IFC, 2018]
Along with the provisions in the 2018 IFC, energy storage language was added to the 2018 International Residential Code for the first time. In summary, the new language in the International Residential Code required energy storage systems to be listed and precluded them from being installed within the habitable space of a dwelling unit.
The 2018 NFPA 1, Fire Code, Chapter 52 contained modifications to the 2015 edition that were very similar to all of the new requirements introduced to the 2018 IFC.
F.2.8 2021 International Code Council Code Development and 2019 NFPA 855, Standard for the Installation of Stationary Energy Storage Systems.
While the code revision process was being completed for the 2018 editions of the IFC and NFPA 1, NFPA developed the new standard NFPA 855, Standard for the Installation of Stationary Energy Storage Systems. The work of the NFPA 855 technical committee closely tracked and utilized the 2018 language added to the fire codes along with the language from NFPA 853, Standard for the Installation of Stationary Fuel Cell Power Systems, for the initial NFPA 855 draft document.

855 - 11	With the adoption and availability of the 2018 editions of the codes, a broader audience was reached that generated additional input to the NFPA 855 committee on the impact of the requirements and questions on how to apply them in differing circumstances such as follows: (1) Roof installs (2) Open parking garage installs (3) Remote installations (4) Dedicated ESS buildings (5) Array (unit) spacing threshold (6) Maximum allowable quantity impact (7) Incidental use 10 percent of floor area limitation (8) Appropriate requirements based upon technology (9) Deflagration prevention/venting (10) Suppression system selection (11) Fire detection method and where required Going into the NFPA 855 First Draft process, language improvements were coordinated with work in progress on the proposals for the 2021 editions of the International Fire Code, International Building Code, and the International Residential Code. Key areas addressed by the current proposals approved by the ICC Fire Code Action Committee and the Fire Code Committee at the proposal hearings for the 2021 edition code change process were as follows: (1) Permits, operational as well as installation (2) Large-scale fire test reliance on new UL 9540A (3) Fire remediation actions and personnel (4) Commissioning (5) Decommissioning (6) Operation and maintenance (7) Repairs, retrofits, and replacements (8) Reused and repurposed equipment (9) Toxic and highly toxic gases (10) Security of installations (11) Occupied work centers (12) Walk-in units (13) Size and separation threshold reduction (14) Maximum allowable quantities as simply a testing trigger (15) Remote installations (16) Dedicated-use buildings designated as an F-1 Group use (17) Non-dedicated-use buildings (18) Elimination of incidental use 10 percent of floor area restriction and H Group designation (19) Explosion control (20) Outdoor installations (21) Rooftop installations (22) Open parking garage installations (23) Mobile ESS equipment and operations

855 - 11	Though some of the new language is more conservative, such as the threshold before large-scale fire testing and the requirement for explosion protection for lithium-ion energy storage systems, other proposed changes provide relief from some requirements such as dedicated-use buildings, remote locations, and rooftop and open parking garage installations. The most restrictive requirements were maintained to address when an energy storage system is installed within a mixed-use occupancy building and it is important to contain an event for life safety and property protection. The changes proposed for the 2021 I-Codes, and coordinated with the 2019 NFPA 855 development process, are significantly different from the 2018 provisions because of industry participation. The initial language of the 2018 editions of the fire codes and the draft of NFPA 855 are intended to obtain an acceptable level of safety recognizing how challenging and dynamic events from batteries and energy storage systems can be, whether the system instigates an issue or is a casualty of outside events. Those who verify code compliance and others working on the code language have maintained an open view, and where industry has provided data on different technologies and/or on documented safety practices, or a reduction in exposure hazards, there has been a willingness to modify the requirements in recognition of the new information and data. F.3 NFPA Fire Protection Research Foundation. There are a few research projects involving the NFPA Fire Protection Research Foundation, Factory Mutual, and Sandia National Laboratories and the Pacific Northwest National Laboratory on behalf of the DOE Office of Electricity Energy Storage Program, and others that have provided background and understanding for those involved in the code writing process. There are numerous other sources for information, however, the following sources are those best known to many of those involved in the code development process: (1) NFPA — firefighter safety in battery energy storage system fires see http://www.nfpa.org/News-and-Research/Resources/Fire-Protection-Research-Foundation/Current-projects/Fire-Fighter-Safety-in-Battery-Energy-Storage-System-Fires (2) NFPA — lithium-ion batteries hazard and use assessment see the following: (a) “Lithium Ion Batteries Hazard and Use Assessment” (b) “Lithium Ion Batteries Hazard and Use Assessment — Phase IIB — Flammability Characterization of Li-ion Batteries for Storage Protection” (c) “Lithium Ion Batteries Hazard and Use Assessment — Phase III” (3) DNV GL — considerations for energy storage systems fire safety see https://www.dnvgl.com/publications/considerations-for-energy-storage-systems-fire-safety-89415 (4) Sandia National Laboratory – energy storage see http://energy.sandia.gov/energy/ssrei/energy-storage/ When industry joined the code-development process, they successfully used additional data specific to their products and operations to bring validity and functionality to proposed code language. The increased industry participation will be a benefit moving forward.

Motion Seq#	**Certified Amending Motion:** Return Entire NFPA Standard
855 - 12	**Recommended Text if Motion Passes:** Return Entire NFPA Standard. **Recommended Text if Motion Fails:** NFPA 855 will be issued.

Motion Seq #	NITMAM Log #	Section/Para	Person(s) Authorized to Make the Motion	Certified Amending Motion**	Motion Page #
70 - 1	85	90.2(A)	Daniel Mikat, Toyota Motor, North America, Automakers Alliance, Global Automakers and SAE International	Reject an Identifiable Part of Second Revision No. 7891	75
70-2	85	625.1	Daniel Mikat, Toyota Motor, North America, Automakers Alliance, Global Automakers and SAE International	Reject an Identifiable Part of Second Revision No. 7776, including any Related Portions of First Revision No. 8385	76
70 - 3	89	625.60	Nancy Stone, American Honda Motors On Behalf of Automakers: Alliance of Automobile Manufacturers (Alliance) - BMW Group, FCA US LLC, Ford Motor Company, General Motors, Jaguar Land Rover, Mazda, Mercedes-Benz USA, Mitsubishi Motors, Porsche, Toyota, Volkswagen Group of America and Volvo Cars North America; Global Automakers – Aston Martin, Ferrari, Honda, Hyundai, Isuzu, Kia, Maserati, McLaren, Nissan, Subaru, Suzuki, and Toyota; and SAE International.	Accept Public Comment No. 1482	77
70 - 4	110	100, Reconditioned	Howard Herndon, National Field Services, PEARL	Reject Second Revision No. 8072	78
70 - 5	94	110.21(A)(2)	Thomas Bishop, Electrical Apparatus Service Association	Reject an Identifiable Part of Second Correlating Revision No. 71	79
70 - 6	111	110.21(A)(2)	Howard Herndon, National Field Services, PEARL	Reject Second Correlating Revision No. 71	81

† Designated Representative in accordance with 4.5.3.5(c) and/or 4.5.3.6 of NFPA's *Regulations Governing the Development of NFPA Standards.*
**In describing the Certified Amending Motion and in the Motions Committee Notes and Comments, the Motions Committee sometimes summarizes or displays the results of the certified amending motions under consideration. The actual Revisions and/or Public Comments related to the motion should, however, be consulted for a complete description of the precise text and associated statements.

70 - 7	22	110.26(C)(2)	Richard Holub, The DuPont Company	Reject an Identifiable Part of Second Revision No. 8104	83
70 - 8	48	210.8(A)	Daniel Buuck, National Association of Home Builders	Reject an Identifiable Part of Second Revision No. 7697 including any Related Portions of First Revision Nos. 8119 and 7705	85
70 - 9	47	210.8(A)	Daniel Buuck, National Association of Home Builders	Reject an Identifiable Part of Second Revision No. 7697 including any Related Portions of First Revision Nos. 8120 and 7705	87
70 - 10	45	210.8(F)	Daniel Buuck, National Association of Home Builders	Reject Second Revision No. 7676	89
70 - 11	127	210.12(A)	Randy Dollar, Siemens Industry Inc	Accept an Identifiable Part of Public Comment No. 1381	90
70 - 12	112	210.15	Howard Herndon, National Field Services, PEARL	Reject an Identifiable Part of Second Revision No. 7657	91
70 - 13	68	210.15	Christel Hunter, Cerro Wire	Reject Second Revision No. 7657	92
70 - 14	42	240.2 Reconditioned	Alan Manche, Schneider Electric	Reject Second Revision No. 8074	93
70 - 15	116	240.62	Howard Herndon, National Field Services, PEARL	Reject Second Revision No. 7974	94
70 - 16	117	240.102	Howard Herndon, National Field Services, PEARL	Reject Second Revision No. 8048	95
70 - 17	80	250.104(B)	Robert Torbin, Omega Flex, Inc	Accept Public Comment No. 808	96
70 - 18	7	300.5(G)	Paul Cabot, American Gas Association	Accept an Identifiable Part of Public Comment No. 444	98
70 - 19	8	300.50(F)	Paul Cabot, American Gas Association Sherry Dahlke, American Pollywater Co.	**Related Motions:** Accept Public Comment Nos. 1470 and 445	99

	30	300.50(F)	(Designated Representative: Paul Cabot, American Gas Association)		
70 - 20	55	310.3(A)	Peter Graser, Copperweld	Accept an Identifiable Part of Public Comment No. 1402	100
70 - 21	56	310.3(B)	Peter Graser, Copperweld	Accept an Identifiable Part of Public Comment No. 1406	101
70 - 22	58	310.3(B)	Peter Graser, Copperweld	Accept an Identifiable Part of Public Comment No. 1406	102
70 - 23	78	Table 310.16 Table 310.17 Ampacity	Peter Graser, Copperweld	Accept an Identifiable Part of Public Comment No. 1382	103
70 - 24	79	Table 310.16 Table 310.17 Columns	Peter Graser, Copperweld	Accept an Identifiable Part of Public Comment No. 1382	109
70 - 25	34	314.24(B)	David Shapiro, Safety First Electrical	Accept Public Comment No. 700	115
70 - 26	62	334.10	Christel Hunter, Cerro Wire	Accept Public Comment No. 1502	116
70 - 27	69 118	406.3(A) 406.3(A)	Christel Hunter, Cerro Wire Howard Herndon, National Field Services, PEARL	**Multiple Notices for a Single Motion:** Reject Second Revision No. 8187	118
70 - 28	70 119	406.7 406.7	Christel Hunter, Cerro Wire Howard Herndon, National Field Services, PEARL	**Multiple Notices for a Single Motion:** Reject Second Revision No. 8189	119
70 - 29	93	408.4(A)	David Shapiro, Safety First Electrical	Accept Public Comment No. 1123	120
70 - 30	71 113	408.8 408.8	Christel Hunter, Cerro Wire Howard Herndon, National Field Services, PEARL	**Multiple Notices for a Single Motion:** Reject Second Revision No. 8172	121

† Designated Representative in accordance with 4.5.3.5(c) and/or 4.5.3.6 of NFPA's *Regulations Governing the Development of NFPA Standards.*
**In describing the Certified Amending Motion and in the Motions Committee Notes and Comments, the Motions Committee sometimes summarizes or displays the results of the certified amending motions under consideration. The actual Revisions and/or Public Comments related to the motion should, however, be consulted for a complete description of the precise text and associated statements.

70 - 31	115	410.6	Howard Herndon, National Field Services, PEARL	Reject Second Revision No. 8162	122
70 - 32	126	411.4	Howard Herndon, National Field Services, PEARL	Reject Second Revision No. 8164	123
70 - 33	72 114	490.49 490.49	Christel Hunter, Cerro Wire Howard Herndon, National Field Services, PEARL	**Multiple Notices for a Single Motion:** Reject Second Revision No. 8222	124
70 - 34	64	501.10(A)(1)(3)	George Straniero, AFC Cable Systems	Reject an Identifiable Part of Second Revision No. 7979	125
70 - 35	84	517.26	Ryan Drury, nVent Themal Management - Fire Rated Wiring (Formally Pentair)	Reject an Identifiable Part of Second Revision No. 7916	126
70 - 36	15 83	551.71(F) 551.71(F)	Keith Waters, Schneider Electric Randy Dollar, Siemens Industry, Inc.	**Multiple Notices for a Single Motion:** Reject an Identifiable Part of a Second Correlating Revision No. 30	127
70 - 37	90	625.2, Electric Vehicle Power Export Equipment (EVPE)	Nancy Stone, American Honda Motors On Behalf of Automakers: Alliance of Automobile Manufacturers (Alliance) - BMW Group, FCA US LLC, Ford Motor Company, General Motors, Jaguar Land Rover, Mazda, Mercedes-Benz USA, Mitsubishi Motors, Porsche, Toyota, Volkswagen Group of America and Volvo Cars North America; Global Automakers – Aston Martin, Ferrari, Honda, Hyundai, Isuzu, Kia, Maserati, McLaren, Nissan, Subaru, Suzuki, and Toyota; and SAE International.	Reject Second Revision No. 7783 including any Related Portions of First Revision No. 8597	128
70 - 38	107	625.5	D. Douglas Burkett, Ford Motor Company, Automakers Alliance, Global Automakers and SAE International	Accept Public Comment No. 1590	129

† Designated Representative in accordance with 4.5.3.5(c) and/or 4.5.3.6 of NFPA's *Regulations Governing the Development of NFPA Standards.*
**In describing the Certified Amending Motion and in the Motions Committee Notes and Comments, the Motions Committee sometimes summarizes or displays the results of the certified amending motions under consideration. The actual Revisions and/or Public Comments related to the motion should, however, be consulted for a complete description of the precise text and associated statements.

70 - 39	101	625.42	Steven Yip, Volkswagen Group of America (Designated Representative: Christopher Michelbacher, Volkswagen Group of America)	Reject an Identifiable Part of Second Correlating Revision No. 21	130
70 - 40	92	625.48	Nancy Stone, American Honda Motors On Behalf of Automakers: Alliance of Automobile Manufacturers (Alliance) - BMW Group, FCA US LLC, Ford Motor Company, General Motors, Jaguar Land Rover, Mazda, Mercedes-Benz USA, Mitsubishi Motors, Porsche, Toyota, Volkswagen Group of America and Volvo Cars North America; Global Automakers – Aston Martin, Ferrari, Honda, Hyundai, Isuzu, Kia, Maserati, McLaren, Nissan, Subaru, Suzuki, and Toyota; and SAE International.	Accept an Identifiable Part of Public Comment No. 1480	131
70 - 41	120	695.10	Howard Herndon, National Field Services, PEARL	Reject Second Revision No. 7522	132
70 - 42	121	700.5(C)	Howard Herndon, National Field Services, PEARL	Reject Second Revision No. 7584	133
70 - 43	125	701.5(C)	Howard Herndon, National Field Services, PEARL	Reject Second Revision No. 7586	134
70 - 44	123	702.5	Howard Herndon, National Field Services, PEARL	Reject an Identifiable Part of Second Revision No. 7588	135
70 - 45	108	705.11(D)	Timothy Croushore, Edison Electric Institute	Reject Second Revision No. 8159 and any Related Portion of First Revision No. 8608	137
70 - 46	109	705.11(F)	Timothy Croushore, Edison Electric Institute	Accept an Identifiable Part of Public Comment No. 315	138
70 - 47	124	708.24(A)	Howard Herndon, National Field Services, PEARL	Reject Second Revision No. 7517	139

† Designated Representative in accordance with 4.5.3.5(c) and/or 4.5.3.6 of NFPA's *Regulations Governing the Development of NFPA Standards.*

**In describing the Certified Amending Motion and in the Motions Committee Notes and Comments, the Motions Committee sometimes summarizes or displays the results of the certified amending motions under consideration. The actual Revisions and/or Public Comments related to the motion should, however, be consulted for a complete description of the precise text and associated statements.

70 - 48	17	725.154	Marcelo Hirschler, GBH International	Accept Public Comment No. 501	140
70 - 49	16	760.154	Marcelo Hirschler, GBH International	Accept Public Comment No. 500	146
70 - 50	74	800.3(G)	Christel Hunter, Cerro Wire	Reject Second Revision No. 7509	151
70 - 51	19	805.182(A) Now in 800.182(A)	Marcelo Hirschler, GBH International	Accept Public Comment No. 516	152
70 - 52	65	840.160	James Wiese, Adtran, Inc	Accept an Identifiable Part of Public Comment No. 2147	153

† Designated Representative in accordance with 4.5.3.5(c) and/or 4.5.3.6 of NFPA's *Regulations Governing the Development of NFPA Standards.*

**In describing the Certified Amending Motion and in the Motions Committee Notes and Comments, the Motions Committee sometimes summarizes or displays the results of the certified amending motions under consideration. The actual Revisions and/or Public Comments related to the motion should, however, be consulted for a complete description of the precise text and associated statements.

Motion Seq#	**Certified Amending Motion:** Reject an Identifiable Part of Second Revision No. 7891
70 – 1	**Recommended Text if Motion Passes:** **90.2(A) Covered.** This *Code* covers the installation and removal of electrical conductors, equipment, and raceways; signaling and communications conductors, equipment, and raceways; and optical fiber cables for the following: 1. Public and private premises, including buildings, structures, mobile homes, recreational vehicles, and floating buildings 2. Yards, lots, parking lots, carnivals, and industrial substations 3. Installations of conductors and equipment that connect to the supply of electricity 4. Installations used by the electric utility, such as office buildings, warehouses, garages, machine shops, and recreational buildings, that are not an integral part of a generating plant, substation, or control center 5. Installations supplying shore power to ships and watercraft in marinas and boatyards, including monitoring of leakage current ~~6. Installations used to export electric power from vehicles to premises wiring or for bidirectional current flow~~
	Recommended Text if Motion Fails: **90.2(A) Covered.** This *Code* covers the installation and removal of electrical conductors, equipment, and raceways; signaling and communications conductors, equipment, and raceways; and optical fiber cables for the following: 1. Public and private premises, including buildings, structures, mobile homes, recreational vehicles, and floating buildings 2. Yards, lots, parking lots, carnivals, and industrial substations 3. Installations of conductors and equipment that connect to the supply of electricity 4. Installations used by the electric utility, such as office buildings, warehouses, garages, machine shops, and recreational buildings, that are not an integral part of a generating plant, substation, or control center 5. Installations supplying shore power to ships and watercraft in marinas and boatyards, including monitoring of leakage current 6. Installations used to export electric power from vehicles to premises wiring or for bidirectional current flow

Motion Seq#	**Certified Amending Motion:** Reject an Identifiable Part of Second Revision No. 7776, including Related Portions of First Revision No. 8385
70 – 2	**Recommended Text if Motion Passes:** **625.1 Scope.** This article covers the electrical conductors and equipment external to ~~connecting~~ an electric vehicle that connects an electric vehicle to a supply of electricity by conductive, inductive, or wireless power transfer (contactless inductive charging) means, and the installation of equipment and devices related to electric vehicle ~~to premises wiring for the purposes of~~ charging~~, power export, or bidirectional current flow~~. Informational Note No. 1: For industrial trucks, see NFPA 505-2018, *Fire Safety Standard for Powered Industrial Trucks Including Type Designations, Areas of Use, Conversions, Maintenance, and Operations*. Informational Note No. 2: UL 2594-2013, *Standard for Electric Vehicle Supply Equipment*, is a safety standard for conductive electric vehicle supply equipment. UL 2202-2009, *Standard for Electric Vehicle Charging System Equipment*, is a safety standard for conductive electric vehicle charging equipment.
	Recommended Text if Motion Fails: **625.1 Scope.** This article covers the electrical conductors and equipment connecting an electric vehicle to premises wiring for the purposes of charging, power export, or bidirectional current flow. Informational Note No. 1: For industrial trucks, see NFPA 505-2018, *Fire Safety Standard for Powered Industrial Trucks Including Type Designations, Areas of Use, Conversions, Maintenance, and Operations*. Informational Note No. 2: UL 2594-2013, *Standard for Electric Vehicle Supply Equipment*, is a safety standard for conductive electric vehicle supply equipment. UL 2202-2009, *Standard for Electric Vehicle Charging System Equipment*, is a safety standard for conductive electric vehicle charging equipment.

NFPA 70, *National Electrical Code*

Submitter: Nancy Stone, American Honda Motors On Behalf of Automakers: Alliance of Automobile Manufacturers (Alliance) - BMW Group, FCA US LLC, Ford Motor Company, General Motors, Jaguar Land Rover, Mazda, Mercedes-Benz USA, Mitsubishi Motors, Porsche, Toyota, Volkswagen Group of America and Volvo Cars North America; Global Automakers – Aston Martin, Ferrari, Honda, Hyundai, Isuzu, Kia, Maserati, McLaren, Nissan, Subaru, Suzuki, and Toyota; and SAE International.

Motion Seq#	**Certified Amending Motion:** Accept Public Comment No. 1482
70 - 3	**Recommended Text if Motion Passes:** ~~**625.60 AC Receptacle Outlets Used for EVPE.**~~ ~~AC receptacles installed in electric vehicles and intended to allow for connection of off-board utilization equipment shall comply with 625.60(A) through (D).~~ ~~(A) **Type.** The receptacle outlet shall be listed.~~ ~~(B) **Rating.** The receptacle outlet shall be rated 250 volts maximum, single phase 50 amperes maximum.~~ ~~(C) **Overcurrent Protection.** Electric vehicles provided with receptacle outlets for power export shall be provided with overcurrent protection integral to the power export system. The overcurrent protection shall have a nominal rating sufficient for the receptacle it protects. The overcurrent protection shall also be sufficiently rated for the maximum available fault current at the receptacle and shall be included in the interactive equipment evaluation. See 625.48.~~ ~~(D) **GFCI Protection for Personnel.** Ground-fault circuit-interrupter protection for personnel shall be provided for all receptacles. The ground-fault circuit-interrupter indication and reset shall be installed in a readily accessible location.~~ ~~Informational Note: There are various methods available to achieve ground-fault circuit-interrupter protection~~ **Recommended Text if Motion Fails:** **625.60 AC Receptacle Outlets Used for EVPE.** AC receptacles installed in electric vehicles and intended to allow for connection of off-board utilization equipment shall comply with 625.60(A) through (D). (A) **Type.** The receptacle outlet shall be listed. (B) **Rating.** The receptacle outlet shall be rated 250 volts maximum, single phase 50 amperes maximum. (C) **Overcurrent Protection.** Electric vehicles provided with receptacle outlets for power export shall be provided with overcurrent protection integral to the power export system. The overcurrent protection shall have a nominal rating sufficient for the receptacle it protects. The overcurrent protection shall also be sufficiently rated for the maximum available fault current at the receptacle and shall be included in the interactive equipment evaluation. See 625.48. (D) **GFCI Protection for Personnel.** Ground-fault circuit-interrupter protection for personnel shall be provided for all receptacles. The ground-fault circuit-interrupter indication and reset shall be installed in a readily accessible location. Informational Note: There are various methods available to achieve ground-fault circuit-interrupter protection.

Motion Seq#	**Certified Amending Motion:** Reject Second Revision No. 8072
70 - 4	**Recommended Text if Motion Passes:** ~~**100 Reconditioned.**~~ ~~Electromechanical systems, equipment, apparatus, or components that are restored to operating conditions. This process differs from normal servicing of equipment that remains within a facility, or replacement of listed equipment on a one-to-one basis. (CMP-10)~~ ~~Informational Note: The term reconditioned is frequently referred to as rebuilt, refurbished, or remanufactured.~~
	Recommended Text if Motion Fails: **100 Reconditioned.** Electromechanical systems, equipment, apparatus, or components that are restored to operating conditions. This process differs from normal servicing of equipment that remains within a facility, or replacement of listed equipment on a one-to-one basis. (CMP-10) Informational Note: The term reconditioned is frequently referred to as rebuilt, refurbished, or remanufactured.

Motion Seq#	**Certified Amending Motion:** Reject an Identifiable Part of Second Correlating Revision No. 71
70 – 5	**Recommended Text if Motion Passes:** **110.21** Marking. **(A)** Equipment Markings. **(1)** General. The manufacturer's name, trademark, or other descriptive marking by which the organization responsible for the product can be identified shall be placed on all electrical equipment. Other markings that indicate voltage, current, wattage, or other ratings shall be provided as specified elsewhere in this *Code*. The marking or label shall be of sufficient durability to withstand the environment involved. **(2)** Reconditioned Equipment. Reconditioned equipment shall be marked with the name, trademark, or other descriptive marking by which the organization responsible for reconditioning the electrical equipment can be identified, along with the date of the reconditioning. Reconditioned equipment shall be identified as reconditioned and approval ~~the original listing mark removed.~~ ~~Approval~~ of the reconditioned equipment shall not be based solely on the equipment's original listing. *Exception: In industrial occupancies, where conditions of maintenance and supervision ensure that only qualified persons service the equipment, the markings indicated in 110.21(A)(2) shall not be required for equipment that is reconditioned by the owner or operator as part of a regular equipment maintenance program.* Informational Note No. 1: Industry standards are available for application of reconditioned and refurbished equipment. Normal servicing of equipment that remains within a facility should not be considered reconditioning or refurbishing. Informational Note No. 2: The term reconditioned may be interchangeable with the terms *rebuilt, refurbished,* or *remanufactured.* Informational Note No. 3: The original listing mark may include the mark of the certifying body and not the entire equipment label. **Recommended Text if Motion Fails:** **110.21** Marking. **(A)** Equipment Markings. **(1)** General. The manufacturer's name, trademark, or other descriptive marking by which the organization responsible for the product can be identified shall be placed on all electrical equipment. Other markings that indicate voltage, current, wattage, or other ratings shall be provided as specified elsewhere in this *Code*. The marking or label shall be of sufficient durability to withstand the environment involved. **(2)** Reconditioned Equipment. Reconditioned equipment shall be marked with the name, trademark, or other descriptive marking by which the organization responsible for reconditioning the electrical equipment can be identified, along with the date of the reconditioning. Reconditioned equipment shall be identified as "reconditioned" and the original listing mark removed. Approval of the reconditioned equipment shall not be based solely on the equipment's original listing.

70 - 5	*Exception: In industrial occupancies, where conditions of maintenance and supervision ensure that only qualified persons service the equipment, the markings indicated in 110.21(A)(2) shall not be required for equipment that is reconditioned by the owner or operator as part of a regular equipment maintenance program.* Informational Note No. 1: Industry standards are available for application of reconditioned and refurbished equipment. Informational Note No. 2: The term *reconditioned* may be interchangeable with the terms *rebuilt*, *refurbished*, or *remanufactured*. Informational Note No. 3: The original listing mark may include the mark of the certifying body and not the entire equipment label.

Motion Seq#	**Certified Amending Motion:** Reject Second Correlating Revision No. 71
70 – 6	**Recommended Text if Motion Passes:** **110.21** Marking. **(A)** Equipment Markings. **(1)** General. The manufacturer's name, trademark, or other descriptive marking by which the organization responsible for the product can be identified shall be placed on all electrical equipment. Other markings that indicate voltage, current, wattage, or other ratings shall be provided as specified elsewhere in this *Code*. The marking or label shall be of sufficient durability to withstand the environment involved. **(2)** Reconditioned Equipment. Reconditioned equipment shall be marked with the name, trademark, or other descriptive marking by which the organization responsible for reconditioning the electrical equipment can be identified, along with the date of the reconditioning. Reconditioned equipment shall be identified as at beginning of reconditioned and approval ~~the original listing mark removed. Approval~~ of the reconditioned equipment shall not be based solely on the equipment's original listing. *Exception: In industrial occupancies, where conditions of maintenance and supervision ensure that only qualified persons service the equipment, the markings indicated in 110.21(A)(2) shall not be required for equipment that is reconditioned by the owner or operator as part of a regular equipment maintenance program.* Informational Note No. 1: Industry standards are available for application of reconditioned and refurbished equipment. Normal servicing of equipment that remains within a facility should not be considered reconditioning or refurbishing. Informational Note No. 2: The term *reconditioned* may be interchangeable with the terms *rebuilt*, *refurbished*, or *remanufactured*. ~~Informational Note No. 3: The original listing mark may include the mark of the certifying body and not the entire equipment label.~~ **(B)** Field-Applied Hazard Markings. Where caution, warning, or danger signs or labels are required by this *Code*, the labels shall meet the following requirements: 1. The marking shall warn of the hazards using effective words, colors, symbols, or any combination thereof. Informational Note: ANSI Z535.4-2011, *Product Safety Signs and Labels*, provides guidelines for suitable font sizes, words, colors, symbols, and location requirements for labels. 2. The label shall be permanently affixed to the equipment or wiring method and shall not be handwritten. *Exception to (2): Portions of labels or markings that are variable, or that could be subject to changes, shall be permitted to be handwritten and shall be legible.* 3. The label shall be of sufficient durability to withstand the environment involved.

70 - 6	Informational Note: ANSI Z535.4-2011, *Product Safety Signs and Labels*, provides guidelines for the design and durability of safety signs and labels for application to electrical equipment. **Recommended Text if Motion Fails:** **110.21** Marking. **(A)** Equipment Markings. **(1)** General. The manufacturer's name, trademark, or other descriptive marking by which the organization responsible for the product can be identified shall be placed on all electrical equipment. Other markings that indicate voltage, current, wattage, or other ratings shall be provided as specified elsewhere in this *Code*. The marking or label shall be of sufficient durability to withstand the environment involved. **(2)** Reconditioned Equipment. Reconditioned equipment shall be marked with the name, trademark, or other descriptive marking by which the organization responsible for reconditioning the electrical equipment can be identified, along with the date of the reconditioning. Reconditioned equipment shall be identified as at beginning of reconditioned and the original listing mark removed. Approval of the reconditioned equipment shall not be based solely on the equipment's original listing. *Exception: In industrial occupancies, where conditions of maintenance and supervision ensure that only qualified persons service the equipment, the markings indicated in 110.21(A)(2) shall not be required for equipment that is reconditioned by the owner or operator as part of a regular equipment maintenance program.* Informational Note No. 1: Industry standards are available for application of reconditioned and refurbished equipment. Informational Note No. 2: The term *reconditioned* may be interchangeable with the terms *rebuilt*, *refurbished*, or *remanufactured*. Informational Note No. 3: The original listing mark may include the mark of the certifying body and not the entire equipment label. **(B)** Field-Applied Hazard Markings. Where caution, warning, or danger signs or labels are required by this *Code*, the labels shall meet the following requirements: 1. The marking shall warn of the hazards using effective words, colors, symbols, or any combination thereof. Informational Note: ANSI Z535.4-2011, *Product Safety Signs and Labels*, provides guidelines for suitable font sizes, words, colors, symbols, and location requirements for labels. 2. The label shall be permanently affixed to the equipment or wiring method and shall not be handwritten. *Exception to (2): Portions of labels or markings that are variable, or that could be subject to changes, shall be permitted to be handwritten and shall be legible.* 3. The label shall be of sufficient durability to withstand the environment involved. Informational Note: ANSI Z535.4-2011, *Product Safety Signs and Labels*, provides guidelines for the design and durability of safety signs and labels for application to electrical equipment.

Motion Seq#	**Certified Amending Motion:** Reject an Identifiable Part of Second Revision No. 8104
70 – 7	**Recommended Text if Motion Passes:** **110.26(C) (2) Large Equipment.** For large equipment that contains overcurrent devices, switching devices, or control devices, there shall be one entrance to and egress from the required working space not less than 610 mm (24 in.) wide and 2.0 m (6**1 2** ft) high at each end of the working space. This requirement shall apply to either of the following conditions: 1. For equipment rated 1200 amperes or more and over 1.8 m (6 ft) wide 2. For service disconnecting means installed in accordance with 230.71 where the combined ampere rating is 1200 amperes or more and over 1.8 m (6 ft) wide ~~Open equipment doors shall not impede the entry to or egress from the working space.~~ A single entrance to and egress from the required working space shall be permitted where either of the conditions in 110.26(C)(2)(a) or (C)(2)(b) is met. 1. *Unobstructed Egress.* Where the location permits a continuous and unobstructed way of egress travel, a single entrance to the working space shall be permitted. 2. *Extra Working Space.* Where the depth of the working space is twice that required by 110.26(A)(1), a single entrance shall be permitted. It shall be located such that the distance from the equipment to the nearest edge of the entrance is not less than the minimum clear distance specified in Table 110.26(A)(1) for equipment operating at that voltage and in that condition.
	Recommended Text if Motion Fails: **110.26(C)(2) Large Equipment.** For large equipment that contains overcurrent devices, switching devices, or control devices, there shall be one entrance to and egress from the required working space not less than 610 mm (24 in.) wide and 2.0 m (6**1 2** ft) high at each end of the working space. This requirement shall apply to either of the following conditions: 1. For equipment rated 1200 amperes or more and over 1.8 m (6 ft) wide 2. For service disconnecting means installed in accordance with 230.71 where the combined ampere rating is 1200 amperes or more and over 1.8 m (6 ft) wide Open equipment doors shall not impede the entry to or egress from the working space. A single entrance to and egress from the required working space shall be permitted where either of the conditions in 110.26(C)(2)(a) or (C)(2)(b) is met.

70 - 7	a) *Unobstructed Egress.* Where the location permits a continuous and unobstructed way of egress travel, a single entrance to the working space shall be permitted. b) *Extra Working Space.* Where the depth of the working space is twice that required by 110.26(A)(1), a single entrance shall be permitted. It shall be located such that the distance from the equipment to the nearest edge of the entrance is not less than the minimum clear distance specified in Table 110.26(A)(1) for equipment operating at that voltage and in that condition.

Motion Seq#	**Certified Amending Motion:** Reject an Identifiable Part of Second Revision No. 7697 including any Related Portions of First Revision Nos. 8119 and 7705
70 – 8	**Recommended Text if Motion Passes:** **210.8(A) Dwelling Units.** All 125-volt, single-phase, 15- and 20-ampere ~~through 250 volt~~ receptacles installed in the locations specified in 210.8(A)(1) through ~~(A)~~ (11) ~~and supplied by single phase branch circuits rated 150 volts or less to ground~~ shall have ground-fault circuit-interrupter protection for personnel. 1. Bathrooms 2. Garages and also accessory buildings that have a floor located at or below grade level not intended as habitable rooms and limited to storage areas, work areas, and areas of similar use 3. Outdoors *Exception to (3): Receptacles that are not readily accessible and are supplied by a branch circuit dedicated to electric snow-melting, deicing, or pipeline and vessel heating equipment shall be permitted to be installed in accordance with 426.28 or 427.22, as applicable.* 4. Crawl spaces — at or below grade level 5. Basements *Exception to (5): A receptacle supplying only a permanently installed fire alarm or burglar alarm system shall not be required to have ground-fault circuit-interrupter protection.* Informational Note: See 760.41(B) and 760.121(B) for power supply requirements for fire alarm systems. Receptacles installed under the exception to 210.8(A)(5) shall not be considered as meeting the requirements of 210.52(G). 6. Kitchens — where the receptacles are installed to serve the countertop surfaces 7. Sinks — where receptacles are installed within 1.8 m (6 ft) from the top inside edge of the bowl of the sink 8. Boathouses 9. Bathtubs or shower stalls — where receptacles are installed within 1.8 m (6 ft) of the outside edge of the bathtub or shower stall 10. Laundry areas *Exception to (1) through (3), (5) through (8), and (10): Listed locking support and mounting receptacles utilized in combination with compatible attachment fittings installed for the purpose of serving a ceiling luminaire or ceiling fan shall not be required to be ground-fault circuit-interrupter protected. If a general-purpose convenience receptacle is integral to the ceiling luminaire or ceiling fan, GFCI protection shall be provided.* 11. Indoor damp and wet locations

70 - 8	**Recommended Text if Motion Fails:** **210.8(A) Dwelling Units.** All 125-volt through 250-volt receptacles installed in the locations specified in 210.8(A)(1) through (A)(11) and supplied by single-phase branch circuits rated 150 volts or less to ground shall have ground-fault circuit-interrupter protection for personnel. 1. Bathrooms 2. Garages and also accessory buildings that have a floor located at or below grade level not intended as habitable rooms and limited to storage areas, work areas, and areas of similar use 3. Outdoors *Exception to (3): Receptacles that are not readily accessible and are supplied by a branch circuit dedicated to electric snow-melting, deicing, or pipeline and vessel heating equipment shall be permitted to be installed in accordance with 426.28 or 427.22, as applicable.* 4. Crawl spaces — at or below grade level 5. Basements *Exception to (5): A receptacle supplying only a permanently installed fire alarm or burglar alarm system shall not be required to have ground-fault circuit-interrupter protection.* Informational Note: See 760.41(B) and 760.121(B) for power supply requirements for fire alarm systems. Receptacles installed under the exception to 210.8(A)(5) shall not be considered as meeting the requirements of 210.52(G). 6. Kitchens — where the receptacles are installed to serve the countertop surfaces 7. Sinks — where receptacles are installed within 1.8 m (6 ft) from the top inside edge of the bowl of the sink 8. Boathouses 9. Bathtubs or shower stalls — where receptacles are installed within 1.8 m (6 ft) of the outside edge of the bathtub or shower stall 10. Laundry areas *Exception to (1) through (3), (5) through (8), and (10): Listed locking support and mounting receptacles utilized in combination with compatible attachment fittings installed for the purpose of serving a ceiling luminaire or ceiling fan shall not be required to be ground-fault circuit-interrupter protected. If a general-purpose convenience receptacle is integral to the ceiling luminaire or ceiling fan, GFCI protection shall be provided.* 11. Indoor damp and wet locations

Motion Seq#	**Certified Amending Motion:** Reject an Identifiable Part of Second Revision No. 7697 including any Related Portions of First Revision Nos. 8120 and 7705
70 – 9	**Recommended Text if Motion Passes:** **210.8 (A) Dwelling Units.** All 125-volt through 250-volt receptacles installed in the locations specified in 210.8(A)(1) through (A)(11) and supplied by single-phase branch circuits rated 150 volts or less to ground or less shall have ground-fault circuit-interrupter protection for personnel. 1. Bathrooms 2. Garages~~,~~ and also accessory buildings that have a floor located at or below grade level not intended as habitable rooms and limited to storage areas, work areas, and areas of similar use 3. Outdoors *Exception to (3): Receptacles that are not readily accessible and are supplied by a branch circuit dedicated to electric snow-melting, deicing, or pipeline and vessel heating equipment shall be permitted to be installed in accordance with 426.28 or 427.22, as applicable.* 4. Crawl spaces — at or below grade level 5. ~~Basements~~ Unfinished portions or areas of the basements not intended as habitable rooms *Exception to (5): A receptacle supplying only a permanently installed fire alarm or burglar alarm system shall not be required to have ground-fault circuit-interrupter protection.* Informational Note: See 760.41(B) and 760.121(B) for power supply requirements for fire alarm systems. Receptacles installed under the exception to 210.8(A)(5) shall not be considered as meeting the requirements of 210.52(G). 6. Kitchens — where the receptacles are installed to serve the countertop surfaces 7. Sinks — where receptacles are installed within 1.8 m (6 ft) from the top inside edge of the bowl of the sink 8. Boathouses 9. Bathtubs or shower stalls — where receptacles are installed within 1.8 m (6 ft) of the outside edge of the bathtub or shower stall 10. Laundry areas *Exception to (1) through (3), (5) through (8), and (10): Listed locking support and mounting receptacles utilized in combination with compatible attachment fittings installed for the purpose of serving a ceiling luminaire or ceiling fan shall not be required to be ground-fault circuit-interrupter protected. If a general-purpose convenience receptacle is integral to the ceiling luminaire or ceiling fan, GFCI protection shall be provided.* 11. Indoor damp and wet locations

70 -9	**Recommended Text if Motion Fails:** **210.8 (A) Dwelling Units.** All 125-volt through 250-volt receptacles installed in the locations specified in 210.8(A)(1) through (A)(11) and supplied by single-phase branch circuits rated 150 volts or less to ground shall have ground-fault circuit-interrupter protection for personnel. 1. Bathrooms 2. Garages and also accessory buildings that have a floor located at or below grade level not intended as habitable rooms and limited to storage areas, work areas, and areas of similar use 3. Outdoors *Exception to (3): Receptacles that are not readily accessible and are supplied by a branch circuit dedicated to electric snow-melting, deicing, or pipeline and vessel heating equipment shall be permitted to be installed in accordance with 426.28 or 427.22, as applicable.* 4. Crawl spaces — at or below grade level 5. Basements *Exception to (5): A receptacle supplying only a permanently installed fire alarm or burglar alarm system shall not be required to have ground-fault circuit-interrupter protection.* Informational Note: See 760.41(B) and 760.121(B) for power supply requirements for fire alarm systems. Receptacles installed under the exception to 210.8(A)(5) shall not be considered as meeting the requirements of 210.52(G). 6. Kitchens — where the receptacles are installed to serve the countertop surfaces 7. Sinks — where receptacles are installed within 1.8 m (6 ft) from the top inside edge of the bowl of the sink 8. Boathouses 9. Bathtubs or shower stalls — where receptacles are installed within 1.8 m (6 ft) of the outside edge of the bathtub or shower stall 10. Laundry areas *Exception to (1) through (3), (5) through (8), and (10): Listed locking support and mounting receptacles utilized in combination with compatible attachment fittings installed for the purpose of serving a ceiling luminaire or ceiling fan shall not be required to be ground-fault circuit-interrupter protected. If a general-purpose convenience receptacle is integral to the ceiling luminaire or ceiling fan, GFCI protection shall be provided.* 11. Indoor damp and wet locations

Motion Seq#	**Certified Amending Motion:** Reject Second Revision No. 7676
	Recommended Text if Motion Passes: ~~**210.8 (F) Outdoor Outlets.**~~ ~~All outdoor outlets for dwellings, other than those covered in 210.8(A)(3), Exception to (3), that are supplied by single-phase branch circuits rated 150 volts to ground or less, 50 amperes or less, shall have ground-fault circuit-interrupter protection for personnel.~~ ~~*Exception: Ground-fault circuit-interrupter protection shall not be required on lighting outlets other than those covered in 210.8(C).*~~
70 - 10	**Recommended Text if Motion Fails:** **210.8(F**) Outdoor Outlets. All outdoor outlets for dwellings, other than those covered in 210.8(A)(3), Exception to (3), that are supplied by single-phase branch circuits rated 150 volts to ground or less, 50 amperes or less, shall have ground-fault circuit-interrupter protection for personnel. *Exception: Ground-fault circuit-interrupter protection shall not be required on lighting outlets other than those covered in 210.8(C).*

Motion Seq#	**Certified Amending Motion:** Accept an Identifiable Part of Public Comment No. 1381
70 - 11	**Recommended Text if Motion Passes:** **210.12 (A) Dwelling Units.** All 120-volt, single-phase, 15- and 20-ampere branch circuits supplying outlets or devices installed in dwelling ~~unit kitchens, family rooms, dining rooms, living rooms, parlors, libraries, dens, bedrooms, sunrooms, recreation rooms, closets, hallways, laundry areas, or similar rooms or areas~~ units shall be protected by any of the following means ~~described in 210.12(A)(1) through (6~~): **Recommended Text if Motion Fails:** **210.12 (A) Dwelling Units.** All 120-volt, single-phase, 15- and 20-ampere branch circuits supplying outlets or devices installed in dwelling unit kitchens, family rooms, dining rooms, living rooms, parlors, libraries, dens, bedrooms, sunrooms, recreation rooms, closets, hallways, laundry areas, or similar rooms or areas shall be protected by any of the means described in 210.12(A)(1) through (6):

Motion Seq#	**Certified Amending Motion:** Reject an Identifiable Part of Second Revision No. 7657
70 - 12	**Recommended Text if Motion Passes:** **210.15 Reconditioned Equipment.** The following shall not be reconditioned: 1. Equipment that provides ground-fault circuit-interrupter protection for personnel 2. Equipment that provides arc-fault circuit-interrupter protection ~~3. Equipment that provides ground-fault protection of equipment~~
	Recommended Text if Motion Fails: **210.15 Reconditioned Equipment.** The following shall not be reconditioned: 1. Equipment that provides ground-fault circuit-interrupter protection for personnel 2. Equipment that provides arc-fault circuit-interrupter protection 3. Equipment that provides ground-fault protection of equipment

Motion Seq#	**Certified Amending Motion:** Reject Second Revision No. 7657
70 - 13	**Recommended Text if Motion Passes:** ~~**210.15** Reconditioned Equipment.~~ ~~The following shall not be reconditioned:~~ ~~1. Equipment that provides ground-fault circuit-interrupter protection for personnel~~ ~~2. Equipment that provides arc-fault circuit-interrupter protection~~ ~~3. Equipment that provides ground-fault protection of equipment~~
	Recommended Text if Motion Fails: **210.15** Reconditioned Equipment. The following shall not be reconditioned: 1. Equipment that provides ground-fault circuit-interrupter protection for personnel 2. Equipment that provides arc-fault circuit-interrupter protection 3. Equipment that provides ground-fault protection of equipment

Motion Seq#	**Certified Amending Motion:** Reject Second Revision No. 8074
70 - 14	**Recommended Text if Motion Passes:** ~~**240.2 Reconditioned.**~~ ~~Electromechanical systems, equipment, apparatus, or components that are restored to operating conditions. This process differs from normal servicing of equipment that remains within a facility, or replacement of listed equipment on a one-to-one basis.~~ ~~Informational Note: The term *reconditioned* is frequently referred to as *rebuilt*, *refurbished*, or *remanufactured*.~~
	Recommended Text if Motion Fails: **240.2, Reconditioned.** Electromechanical systems, equipment, apparatus, or components that are restored to operating conditions. This process differs from normal servicing of equipment that remains within a facility, or replacement of listed equipment on a one-to-one basis. Informational Note: The term *reconditioned* is frequently referred to as *rebuilt*, *refurbished*, or *remanufactured*.

Motion Seq#	**Certified Amending Motion:** Reject Second Revision No. 7974
70 - 15	**Recommended Text if Motion Passes:** ~~**240.62** Reconditioned Equipment.~~ ~~Low-voltage fuseholders and low-voltage nonrenewable fuses shall not be permitted to be reconditioned.~~
	Recommended Text if Motion Fails: **240.62** Reconditioned Equipment. Low-voltage fuseholders and low-voltage nonrenewable fuses shall not be permitted to be reconditioned.

Motion Seq#	**Certified Amending Motion:** Reject Second Revision No. 8048
70 - 16	**Recommended Text if Motion Passes:** ~~**240.102** Reconditioned Equipment.~~ ~~Medium-voltage fuseholders and medium-voltage nonrenewable fuses shall not be permitted to be reconditioned.~~
	Recommended Text if Motion Fails: **240.102** Reconditioned Equipment. Medium-voltage fuseholders and medium-voltage nonrenewable fuses shall not be permitted to be reconditioned.

Motion Seq#	**Certified Amending Motion:** Accept Public Comment No. 808
70 - 17	**Recommended Text if Motion Passes:** **250.104 (B) Other Metal Piping.** If installed in or attached to a building or structure, a metal piping system(s), including gas piping, that is likely to become energized shall be bonded to any of the following: 1. Equipment grounding conductor for the circuit that is likely to energize the piping system 2. Service equipment enclosure 3. Grounded conductor at the service 4. Grounding electrode conductor, if of sufficient size 5. One or more grounding electrodes used, if the grounding electrode conductor or bonding jumper to the grounding electrode is of sufficient size The bonding conductor(s) or jumper(s) shall be sized in accordance with Table 250.122, and equipment grounding conductors shall be sized in accordance with Table 250.122 using the rating of the circuit that is likely to energize the piping system(s). The points of attachment of the bonding jumper(s) shall be accessible. Informational Note No. 1: Bonding all piping and metal air ducts within the premises will provide additional safety. Informational Note No. 2: Additional information for gas piping systems can be found in Section 7.~~13~~ 12 of NFPA 54-2018, *National Fuel Gas Code* ~~and NFPA 780-2017, *Standard for the Installation of Lightning Protection Systems*~~. Information extracted from the NFPA 54-2018 covering the bonding requirements for metal gas piping systems can be found in Informative Annex K. **Informative Annex K Bonding Requirements for Metal Gas Piping Systems** *This informative annex is not a part of the requirements of this NFPA document, but is included for informational purposes only.* **K.12 Electrical Bonding and Grounding.** **K.12.1 Pipe and Tubing Other than CSST.** Each aboveground portion of a gas piping system, other than CSST that is likely to become energized shall be electrically continuous and bonded to an effective ground-fault current path. Gas piping, other than CSST shall be considered to be bonded when it is connected to appliances that are connected to the appliance grounding conductor of the circuit supplying that appliance. **K.12.2 * CSST.** CSST gas piping systems and gas piping systems containing one or more segments of CSST, shall be electrically continuous and bonded to the electrical service grounding electrode system or, where provided, lightning protection grounding electrode system. **K.12.2.1** The bonding jumper shall connect to a metallic pipe, pipe fitting, or CSST fitting. **K.12.2.2** The bonding jumper shall not be smaller than 6 AWG copper wire or equivalent. **K.12.2.3** The length of the jumper between the connection to the gas piping system and the grounding electrode system shall not exceed 75 ft (22 m). Any additional grounding electrodes installed to meet this requirement shall be bonded to the electrical service grounding electrode system or, where provided, lightning protection grounding electrode system. **K.12.2.4** Bonding connections shall be in accordance with NFPA 70, *National Electrical Code®*.

	K.12.2.5 Devices used for the bonding connection shall be listed for the application in accordance with UL 467-2013, *Grounding and Bonding Equipment*. **K.12.3 Arc-Resistant Jacketed CSST.** CSST listed with an arc-resistant jacket or coating system in accordance with ANSI LC 1/CSA 6.26-2018, *Fuel Gas Piping Systems Using Corrugated Stainless Steel Tubing (CSST)*, shall be electrically continuous and bonded to an effective ground fault current path. Where any CSST component of a piping system does not have an arc-resistant jacket or coating system, the bonding requirements of 7.12.2 shall apply. Arc-resistant jacketed CSST shall be considered to be bonded when it is connected to appliances that are connected to the appliance grounding conductor of the circuit supplying that appliance. **K.12.4* Prohibited Use.** Gas piping shall not be used as a grounding conductor or electrode. **K.12.5* Lightning Protection Systems.** Where a lightning protection system is installed, the bonding of the gas piping shall be in accordance with NFPA 780, *Standard for the Installation of Lightning Protection Systems*, 2008.
70 - 17	**Recommended Text if Motion Fails:** **250.104 (B) Other Metal Piping.** If installed in or attached to a building or structure, a metal piping system(s), including gas piping, that is likely to become energized shall be bonded to any of the following: 1. Equipment grounding conductor for the circuit that is likely to energize the piping system 2. Service equipment enclosure 3. Grounded conductor at the service 4. Grounding electrode conductor, if of sufficient size 5. One or more grounding electrodes used, if the grounding electrode conductor or bonding jumper to the grounding electrode is of sufficient size The bonding conductor(s) or jumper(s) shall be sized in accordance with Table 250.122, and equipment grounding conductors shall be sized in accordance with Table 250.122 using the rating of the circuit that is likely to energize the piping system(s). The points of attachment of the bonding jumper(s) shall be accessible. Informational Note No. 1: Bonding all piping and metal air ducts within the premises will provide additional safety. Informational Note No. 2: Additional information for gas piping systems can be found in NFPA 54-2018, *National Fuel Gas Code*, and NFPA 780-2017, *Standard for the Installation of Lightning Protection Systems*. **NOTE**: No Annex K will be included in the document

Motion Seq#	**Certified Amending Motion:** Accept an Identifiable Part of Public Comment No. 444
70 - 18	**Recommended Text if Motion Passes:** **300.5(G) Raceway Seals**. Conduits or raceways through which moisture may contact live parts shall be sealed or plugged at either or both ends. Spare or unused raceways shall also be sealed. All conduits or raceways entering a building or structure shall be sealed at the end within the building or structure. Sealants shall be identified for use with the cable insulation, conductor insulation, bare conductor, shield, or other components. Explosionproof seals shall not be required for this purpose. ~~Informational Note: Presence of hazardous gases or vapors may also necessitate sealing of underground conduits or raceways entering buildings.~~
	Recommended Text if Motion Fails: **300.5(G) Raceway Seals.** Conduits or raceways through which moisture may contact live parts shall be sealed or plugged at either or both ends. Spare or unused raceways shall also be sealed. Sealants shall be identified for use with the cable insulation, conductor insulation, bare conductor, shield, or other components. Informational Note: Presence of hazardous gases or vapors may also necessitate sealing of underground conduits or raceways entering buildings.

Motion Seq#	**Certified Amending Motion:** Accept Public Comment Nos. 1470 and 445
70 -19	**Recommended Text if Motion Passes:** **300.50(F) Raceway ~~Seal.~~ Seals.** See 300.5(G). ~~Where a raceway enters from an underground system, the end within the building shall be sealed with an identified compound so as to prevent the entrance of moisture or gases, or it shall be so arranged to prevent moisture from contacting live parts.~~
	Recommended Text if Motion Fails: **300.50(F) Raceway Seal.** Where a raceway enters from an underground system, the end within the building shall be sealed with an identified compound so as to prevent the entrance of moisture or gases, or it shall be so arranged to prevent moisture from contacting live parts.

Motion Seq#	**Certified Amending Motion:** Accept an Identifiable Part of Public Comment No. 1402
70 - 20	**Recommended Text if Motion Passes:** **310.3(A) Minimum Size of Conductors.** The minimum size of conductors for voltage ratings up to and including 2000 volts shall be 14 AWG copper and copper-clad aluminum or 12 AWG ~~aluminum or copper-clad aluminum~~, except as permitted elsewhere in this Code.
	Recommended Text if Motion Fails: **310.3(A) Minimum Size of Conductors.** The minimum size of conductors for voltage ratings up to and including 2000 volts shall be 14 AWG copper or 12 AWG aluminum or copper-clad aluminum, except as permitted elsewhere in this *Code*.

Motion Seq#	**Certified Amending Motion:** Accept an Identifiable Part of Public Comment No. 1406
70 - 21	**Recommended Text if Motion Passes:** **310.3(B) Conductor Material.** Conductors in this article shall be copper, ~~of~~ aluminum, or copper-clad aluminum ~~or copper~~ unless otherwise specified. Aluminum and copper-clad aluminum shall comply with the following: (1) Solid aluminum conductors 8, 10, and 12 AWG shall be made of an AA-8000 series electrical grade aluminum alloy conductor material. (2) Stranded aluminum conductors 8 AWG through 1000 kcmil marked as Type RHH, RHW, XHHW, XHHN, XHWN, THW, THHW, THWN, THHN, service-entrance Type SE Style U, and SE Style R shall be made of an AA-8000 series electrical grade aluminum alloy conductor material. (3) For ~~a~~ copper-clad aluminum ~~conductor~~ conductors, the copper shall form a minimum of 10 percent of the cross-sectional area of a solid conductor or each strand of a stranded conductor. The aluminum core of a copper-clad aluminum conductor shall be made of an AA-8000 series ~~electric~~ electrical grade aluminum alloy conductor material.
	Recommended Text if Motion Fails: **310.3(B) Conductor Material.** Conductors in this article shall be of aluminum, copper-clad aluminum, or copper unless otherwise specified. Solid aluminum conductors 8, 10, and 12 AWG shall be made of an AA-8000 series electrical grade aluminum alloy conductor material. Stranded aluminum conductors 8 AWG through 1000 kcmil marked as Type RHH, RHW, XHHW, XHHN, XHWN, THW, THHW, THWN, THHN, service-entrance Type SE Style U, and SE Style R shall be made of an AA-8000 series electrical grade aluminum alloy conductor material. For a copper-clad aluminum conductor, the copper shall form a minimum of 10 percent of the cross-sectional area of a solid conductor or each strand of a stranded conductor. The aluminum core of a copper-clad aluminum conductor shall be made of an AA-8000 series electric grade aluminum alloy conductor material.

Motion Seq#	**Certified Amending Motion:** Accept an Identifiable Part of Public Comment No. 1406
70 - 22	**Recommended Text if Motion Passes:** **310.3 (B) Conductor Material.** Conductors in this article shall be of aluminum, copper-clad aluminum, or copper unless otherwise specified. Solid aluminum conductors 8, 10, and 12 AWG shall be made of an AA-8000 series electrical grade aluminum alloy conductor material. Stranded aluminum conductors 8 AWG through 1000 kcmil marked as Type RHH, RHW, XHHW, XHHN, XHWN, THW, THHW, THWN, THHN, service-entrance Type SE Style U, and SE Style R shall be made of an AA-8000 series electrical grade aluminum alloy conductor material. For a copper-clad aluminum conductor, the copper shall form a minimum of 10 percent of the cross-sectional area of a solid conductor or each strand of a stranded conductor. The aluminum core of a copper-clad aluminum conductor shall be made of an AA-8000 series electric grade aluminum alloy conductor material. <u>Copper-clad aluminum conductors shall be listed.</u>
	Recommended Text if Motion Fails: **310.3(B) Conductor Material.** Conductors in this article shall be of aluminum, copper-clad aluminum, or copper unless otherwise specified. Solid aluminum conductors 8, 10, and 12 AWG shall be made of an AA-8000 series electrical grade aluminum alloy conductor material. Stranded aluminum conductors 8 AWG through 1000 kcmil marked as Type RHH, RHW, XHHW, XHHN, XHWN, THW, THHW, THWN, THHN, service-entrance Type SE Style U, and SE Style R shall be made of an AA-8000 series electrical grade aluminum alloy conductor material. For a copper-clad aluminum conductor, the copper shall form a minimum of 10 percent of the cross-sectional area of a solid conductor or each strand of a stranded conductor. The aluminum core of a copper-clad aluminum conductor shall be made of an AA-8000 series electric grade aluminum alloy conductor material.

Motion Seq#	**Certified Amending Motion:** Accept an Identifiable Part of Public Comment No. 1382

70-23

Recommended Text if Motion Passes:

Table 310.16 Ampacities of Insulated Conductors with Not More Than Three Current-Carrying Conductors in Raceway, Cable, or Earth (Directly Buried)

Size AWG or kcmil	Temperature Rating of Conductor [See Table 310.4(A)]									Size AWG or kcmil
	60°C (140°F)	75°C (167°F)	90°C (194°F)	60°C (140°F)	75°C (167°F)	90°C (194°F)	60°C (140°F)	75°C (167°F)	90°C (194°F)	
	Types TW, UF	Types RHW, THHW, THW, THWN, XHHW, XHWN, USE, ZW	Types TBS, SA, SIS, FEP, FEPB, MI, PFA, RHH, RHW-2, THHN, THHW, THW-2, THWN-2, USE-2, XHH, XHHW, XHHW-2, XHWN, XHWN-2, XHHN, Z, ZW-2	Types TW, UF	Types RHW, THHW, THW, THWN, XHHW, XHWN, USE	Types TBS, SA, SIS, THHN, THHW, THW-2, THWN-2, RHH, RHW-2, USE-2, XHH, XHHW, XHHW-2, XHWN, XHWN-2, XHHN	Types TW, UF	Types RHW, THHW, THW, THWN, XHHW, XHWN, USE	Types TBS, SA, SIS, THHN, THHW, THW-2, THWN-2, RHH, RHW-2, USE-2, XHH, XHHW, XHHW-2, XHWN, XHWN-2, XHHN	
	COPPER			COPPER-CLAD ALUMINUM			ALUMINUM ~~OR COPPERCLAD ALUMINUM~~			
18*	-	-	14	-	-	-	-	-	-	-
16*	-	-	18	-	-	-	-	-	-	-
14*	15	20	25	-	-	-	-	-	-	-
12*	20	25	30	15	20	25	15	20	25	12*
10*	30	35	40	25	30	35	25	30	35	10*
8	40	50	55	35	40	45	35	40	45	8
6	55	65	75	40	50	55	40	50	55	6
4	70	85	95	55	65	75	55	65	75	4
3	85	100	115	65	75	85	65	75	85	3
2	95	115	130	75	90	100	75	90	100	2
1	110	130	145	85	100	115	85	100	115	1
1/0	125	150	170	100	120	135	100	120	135	1/0

2/0	145	175	195	115	135	150	115	135	150	2/0
3/0	165	200	225	130	155	175	130	155	175	3/0
4/0	195	230	260	150	180	205	150	180	205	4/0
250	215	255	290	170	205	230	170	205	230	250
300	240	285	320	195	230	260	195	230	260	300
350	260	310	350	210	250	280	210	250	280	350
400	280	335	380	225	270	305	225	270	305	400
500	320	380	430	260	310	350	260	310	350	500
600	350	420	475	285	340	385	285	340	385	600
700	385	460	520	315	375	425	315	375	425	700
750	400	475	535	320	385	435	320	385	435	750
800	410	490	555	330	395	445	330	395	445	800
900	435	520	585	355	425	480	355	425	480	900
1000	455	545	615	375	445	500	375	445	500	1000
1250	495	590	665	405	485	545	405	485	545	1250
1500	525	625	705	435	520	585	435	520	585	1500
1750	545	650	735	455	545	615	455	545	615	1750
2000	555	665	750	470	560	630	470	560	630	2000

Notes:
1. Section 3109.16 shall be referenced for conditions of use.
2. Section 310.15(B) shall be referenced for ampacity correction factors where the ambient temperature is other than 30°C (86°F).
3. Section 310.15(C)(1) shall be referenced for more than three current-carrying conductors.

*Section 240.4(D) shall be referenced for conductor overcurrent protection limitations, except as modified elsewhere in the Code.

70-23

Table 310.17 Ampacities of Single-Insulated Conductors in Free Air

Size AWG or kcmil	Temperature Rating of Conductor [See Table 310.4(A).]									Size AWG or kcmil
	60°C (140°F)	**75°C (167°F)**	**90°C (194°F)**	**60°C (140°F)**	**75°C (167°F)**	**90°C (194°F)**	**60°C (140°F)**	**75°C (167°F)**	**90°C (194°F)**	
	Types TW, UF	**Types RHW, THHW, THW, THWN, XHHW, XHWN, ZW**	**Types TBS, SA, SIS, FEP, FEPB, MI, PFA, RHH, RHW-2, THHN, THHW, THW-2, THWN-2, USE-2, XHH, XHHW, XHHW-2, XHWN, XHWN-2, XHHN, Z, ZW-2**	**Types TW, UF**	**Types RHW, THHW, THW, THWN, XHHW, ZW**	**Types TBS, SA, SIS, FEP, FEPB, MI, RHH, RHW-2, THHN, THHW, THW-2, THWN-2, USE-2, XHH, XHHW, XHHW-2, ZW-2**	**Types TW, UF**	**Types RHW, THHW, THW, THWN, XHHW, XHWN**	**Types TBS, SA, SIS, THHN, THHW, THW-2, THWN-2, RHH, RHW-2, USE-2, XHH, XHHW, XHHW-2, XHWN, XHWN-2, XHHN**	

70-23

	COPPER			COPPER-CLAD ALUMINUM			ALUMINUM ~~OR COPPERCLAD ALUMINUM~~			
18*	-	-	18	-	-	-	-	-	-	-
16*	-	-	24	-	-	-	-	-	-	-
14*	25	30	35	-	-	-	-	-	-	-
12*	30	35	40	25	30	35	25	30	35	12*
10*	40	50	55	35	40	45	35	40	45	10*
8	60	70	80	45	55	60	45	55	60	8
6	80	95	105	60	75	85	60	75	85	6
4	105	125	140	80	100	115	80	100	115	4
3	120	145	165	95	115	130	95	115	130	3
2	140	170	190	110	135	150	110	135	150	2
1	165	195	220	130	155	175	130	155	175	1
1/0	195	230	260	150	180	205	150	180	205	1/0
2/0	225	265	300	175	210	235	175	210	235	2/0
3/0	260	310	350	200	240	270	200	240	270	3/0
4/0	300	360	405	235	280	315	235	280	315	4/0
250	340	405	455	265	315	355	265	315	355	250
300	375	445	500	290	350	395	290	350	395	300
350	420	505	570	330	395	445	330	395	445	350
400	455	545	615	355	425	480	355	425	480	400
500	515	620	700	405	485	545	405	485	545	500
600	575	690	780	455	545	615	455	545	615	600
700	630	755	850	500	595	670	500	595	670	700
750	655	785	885	515	620	700	515	620	700	750
800	680	815	920	535	645	725	535	645	725	800
900	730	870	980	580	700	790	580	700	790	900
1000	780	935	1055	625	750	845	625	750	845	1000
1250	890	1065	1200	710	855	965	710	855	965	1250
1500	980	1175	1325	795	950	1070	795	950	1070	1500
1750	1070	1280	1445	875	1050	1185	875	1050	1185	1750
2000	1155	1385	1560	960	1150	1295	960	1150	1295	2000

Notes:
1. Section 310.17 shall be referenced for conditions of use.
2. Section 310.15(B) shall be referenced for ampacity correction factors where the ambient temperature is other than 30°C (86°F).

*Section 240.4(D) shall be referenced for conductor overcurrent protection limitations, except as modified elsewhere in the Code.

70-23

Recommended Text if Motion Fails:

Table 310.16 (Ampacities of Insulated Conductors with Not More Than Three Current-Carrying Conductors in Raceway, Cable, or Earth (Directly Buried)

Size AWG or kcmil	Temperature Rating of Conductor [See Table 310.4(A)]						Size AWG or kcmil
	60°C (140°F)	75°C (167°F)	90°C (194°F)	60°C (140°F)	75°C (167°F)	90°C (194°F)	
	Types TW, UF	Types RHW, THHW, THW, THWN, XHHW, XHWN, USE, ZW	Types TBS, SA, SIS, FEP, FEPB, MI, PFA, RHH, RHW-2, THHN, THHW, THW-2, THWN-2, USE-2, XHH, XHHW, XHHW-2, XHWN, XHWN-2, XHHN, Z, ZW-2	Types TW, UF	Types RHW, THHW, THW, THWN, XHHW, XHWN, USE	Types TBS, SA, SIS, THHN, THHW, THW-2, THWN-2, RHH, RHW-2, USE-2, XHH, XHHW, XHHW-2, XHWN, XHWN-2, ZW-2XHHN	
	COPPER			ALUMINUM OR COPPER-CLAD ALUMINUM			
18**	—	—	14	—	—	—	—
16**	—	—	18	—	—	—	—
14**	15	20	25	—	—	—	—
12**	20	25	30	15	20	25	12**
10**	30	35	40	25	30	35	10**
8	40	50	55	35	40	45	8
6	55	65	75	40	50	55	6
4	70	85	95	55	65	75	4
3	85	100	115	65	75	85	3
2	95	115	130	75	90	100	2
1	110	130	145	85	100	115	1
1/0	125	150	170	100	120	135	1/0
2/0	145	175	195	115	135	150	2/0
3/0	165	200	225	130	155	175	3/0
4/0	195	230	260	150	180	205	4/0
250	215	255	290	170	205	230	250
300	240	285	320	195	230	260	300
350	260	310	350	210	250	280	350
400	280	335	380	225	270	305	400
500	320	380	430	260	310	350	500
600	350	420	475	285	340	385	600
700	385	460	520	315	375	425	700

750	400	475	535	320	385	435	750
800	410	490	555	330	395	445	800
900	435	520	585	355	425	480	900
1000	455	545	615	375	445	500	1000
1250	495	590	665	405	485	545	1250
1500	525	625	705	435	520	585	1500
1750	545	650	735	455	545	615	1750
2000	555	665	750	470	560	630	2000

Notes:
1. Section 310.16 shall be referenced for conditions of use.
*2. Section 310.15(B) shall be referenced for the ampacity correction factors where the ambient temperature is other than 30°C (86°F).
**3. Section 310.15(C)(1) shall be referenced for more than three current-carrying conductors.
**Section 240.4(D) shall be referenced for conductor overcurrent protection limitations, except as modified elsewhere in the *Code*.

70-23

Table 310.17 Ampacities of Single-Insulated Conductors in Free Air

Size AWG or kcmil	Temperature Rating of Conductor [See Table 310.4(A)]						Size AWG or kcmil
	60°C (140°F)	**75°C (167°F)**	**90°C (194°F)**	**60°C (140°F)**	**75°C (167°F)**	**90°C (194°F)**	
	Types TW, UF	**Types RHW, THHW, THW, THWN, XHHW, XHWN, ZW**	**Types TBS, SA, SIS, FEP, FEPB, MI, PFA, RHH, RHW-2, THHN, THHW, THW-2, THWN-2, USE-2, XHH, XHHW, XHHW-2, XHWN, XHWN-2, XHHN, Z, ZW-2**	**Types TW, UF**	**Types RHW, THHW, THW, THWN, XHHW, XHWN**	**Types TBS, SA, SIS, THHN, THHW, THW-2, THWN-2, RHH, RHW-2, USE-2, XHH, XHHW, XHHW-2, XHWN, XHWN-2, ZW-2XHHN**	
	COPPER			**ALUMINUM OR COPPER-CLAD ALUMINUM**			
18	—	—	18	—	—	—	—
16	—	—	24	—	—	—	—
14**	25	30	35	—	—	—	—
12**	30	35	40	25	30	35	12**
10**	40	50	55	35	40	45	10**
8	60	70	80	45	55	60	8
6	80	95	105	60	75	85	6
4	105	125	140	80	100	115	4

3	120	145	165	95	115	130	3
2	140	170	190	110	135	150	2
1	165	195	220	130	155	175	1
1/0	195	230	260	150	180	205	1/0
2/0	225	265	300	175	210	235	2/0
3/0	260	310	350	200	240	270	3/0
4/0	300	360	405	235	280	315	4/0
250	340	405	455	265	315	355	250
300	375	445	500	290	350	395	300
350	420	505	570	330	395	445	350
400	455	545	615	355	425	480	400
500	515	620	700	405	485	545	500
600	575	690	780	455	545	615	600
700	630	755	850	500	595	670	700
750	655	785	885	515	620	700	750
800	680	815	920	535	645	725	800
900	730	870	980	580	700	790	900
1000	780	935	1055	625	750	845	1000
1250	890	1065	1200	710	855	965	1250
1500	980	1175	1325	795	950	1070	1500
1750	1070	1280	1445	875	1050	1185	1750
2000	1155	1385	1560	960	1150	1295	2000

70-23

Notes:
1. Section 310.17 shall be referenced for conditions of use.
*2. Section 310.15(B) shall be referenced for the ampacity correction factors where the ambient temperature is other than 30°C (86°F).
**Section 240.4(D) shall be referenced for conductor overcurrent protection limitations, except as modified elsewhere in the *Code*.

Motion Seq#	**Certified Amending Motion:** Accept an Identifiable Part of Public Comment No. 1382

70 – 24

Recommended Text if Motion Passes:

Table 310.16 Ampacities of Insulated Conductors with Not More Than Three Current-Carrying Conductors in Raceway, Cable, or Earth (Directly Buried)

Size AWG or kcmil	Temperature Rating of Conductor [See Table 310.4(A)]									Size AWG or kcmil
	60°C (140°F)	75°C (167°F)	90°C (194°F)	60°C (140°F)	75°C (167°F)	90°C (194°F)	60°C (140°F)	75°C (167°F)	90°C (194°F)	
	Types TW, UF	Types RHW, THHW, THW, THWN, XHHW, XHWN, USE, ZW	Types TBS, SA, SIS, FEP, FEPB, MI, PFA, RHH, RHW-2, THHN, THHW, THW-2, THWN-2, USE-2, XHH, XHHW, XHHW-2, XHWN, XHWN-2, XHHN, Z, ZW-2	Types TW, UF	Types RHW, THHW, THW, THWN, XHHW, XHWN, USE	Types TBS, SA, SIS, THHN, THHW, THW-2, THWN-2, RHH, RHW-2, USE-2, XHH, XHHW, XHHW-2, XHWN, XHWN-2, XHHN	Types TW, UF	Types RHW, THHW, THW, THWN, XHHW, XHWN, USE	Types TBS, SA, SIS, THHN, THHW, THW-2, THWN-2, RHH, RHW-2, USE-2, XHH, XHHW, XHHW-2, XHWN, XHWN-2, XHHN	
	COPPER			COPPER-CLAD ALUMINUM			ALUMINUM ~~OR COPPERCLAD ALUMINUM~~			
18*	-	-	14	-	-	-	-	-	-	-
16*	-	-	18	-	-	-	-	-	-	-
14*	15	20	25	10	15	20	-	-	-	-
12*	20	25	30	15	20	25	15	20	25	12*
10*	30	35	40	25	30	35	25	30	35	10*
8	40	50	55	35	40	45	35	40	45	8
6	55	65	75	40	50	55	40	50	55	6
4	70	85	95	55	65	75	55	65	75	4
3	85	100	115	65	75	85	65	75	85	3
2	95	115	130	75	90	100	75	90	100	2
1	110	130	145	85	100	115	85	100	115	1
1/0	125	150	170	100	120	135	100	120	135	1/0

2/0	145	175	195	115	135	150	115	135	150	2/0
3/0	165	200	225	130	155	175	130	155	175	3/0
4/0	195	230	260	150	180	205	150	180	205	4/0
250	215	255	290	170	205	230	170	205	230	250
300	240	285	320	195	230	260	195	230	260	300
350	260	310	350	210	250	280	210	250	280	350
400	280	335	380	225	270	305	225	270	305	400
500	320	380	430	260	310	350	260	310	350	500
600	350	420	475	285	340	385	285	340	385	600
700	385	460	520	315	375	425	315	375	425	700
750	400	475	535	320	385	435	320	385	435	750
800	410	490	555	330	395	445	330	395	445	800
900	435	520	585	355	425	480	355	425	480	900
1000	455	545	615	375	445	500	375	445	500	1000
1250	495	590	665	405	485	545	405	485	545	1250
1500	525	625	705	435	520	585	435	520	585	1500
1750	545	650	735	455	545	615	455	545	615	1750
2000	555	665	750	470	560	630	470	560	630	2000

Notes:
1. Section 3109.16 shall be referenced for conditions of use.
2. Section 310.15(B) shall be referenced for ampacity correction factors where the ambient temperature is other than 30°C (86°F).
3. Section 310.15(C)(1) shall be referenced for more than three current-carrying conductors.

*Section 240.4(D) shall be referenced for conductor overcurrent protection limitations, except as modified elsewhere in the Code.

70 - 24

Table 310.17 Ampacities of Single-Insulated Conductors in Free Air

Size AWG or kcmil	Temperature Rating of Conductor [See Table 310.4(A).]									Size AWG or kcmil
	60°C (140°F)	75°C (167°F)	90°C (194°F)	60°C (140°F)	75°C (167°F)	90°C (194°F)	60°C (140°F)	75°C (167°F)	90°C (194°F)	
	Types TW, UF	Types RHW, THHW, THW, THWN, XHHW, XHWN, ZW	Types TBS, SA, SIS, FEP, FEPB, MI, PFA, RHH, RHW-2, THHN, THHW, THW-2, THWN-2, USE-2, XHH, XHHW, XHHW-2, XHWN, XHWN-2, XHHN, Z, ZW-2	Types TW, UF	Types RHW, THHW, THW, THWN, XHHW, ZW	Types TBS, SA, SIS, FEP, FEPB, MI, RHH, RHW-2, THHN, THHW, THW-2, THWN-2, USE-2, XHH, XHHW, XHHW-2, ZW-2	Types TW, UF	Types RHW, THHW, THW, THWN, XHHW, XHWN	Types TBS, SA, SIS, THHN, THHW, THW-2, THWN-2, RHH, RHW-2, USE-2, XHH, XHHW, XHHW-2, XHWN, XHWN-2, XHHN	

70 - 24

	COPPER			COPPER-CLAD ALUMINUM			ALUMINUM ~~OR COPPERCLAD ALUMINUM~~			
18*	-	-	18	-	-	-	-	-	-	-
16*	-	-	24	-	-	-	-	-	-	-
14*	25	30	35	20	25	30	-	-	-	-
12*	30	35	40	25	30	35	25	30	35	12*
10*	40	50	55	35	40	45	35	40	45	10*
8	60	70	80	45	55	60	45	55	60	8
6	80	95	105	60	75	85	60	75	85	6
4	105	125	140	80	100	115	80	100	115	4
3	120	145	165	95	115	130	95	115	130	3
2	140	170	190	110	135	150	110	135	150	2
1	165	195	220	130	155	175	130	155	175	1
1/0	195	230	260	150	180	205	150	180	205	1/0
2/0	225	265	300	175	210	235	175	210	235	2/0
3/0	260	310	350	200	240	270	200	240	270	3/0
4/0	300	360	405	235	280	315	235	280	315	4/0
250	340	405	455	265	315	355	265	315	355	250
300	375	445	500	290	350	395	290	350	395	300
350	420	505	570	330	395	445	330	395	445	350
400	455	545	615	355	425	480	355	425	480	400
500	515	620	700	405	485	545	405	485	545	500
600	575	690	780	455	545	615	455	545	615	600
700	630	755	850	500	595	670	500	595	670	700
750	655	785	885	515	620	700	515	620	700	750
800	680	815	920	535	645	725	535	645	725	800
900	730	870	980	580	700	790	580	700	790	900
1000	780	935	1055	625	750	845	625	750	845	1000
1250	890	1065	1200	710	855	965	710	855	965	1250
1500	980	1175	1325	795	950	1070	795	950	1070	1500
1750	1070	1280	1445	875	1050	1185	875	1050	1185	1750
2000	1155	1385	1560	960	1150	1295	960	1150	1295	2000

Notes:
1. Section 310.17 shall be referenced for conditions of use.
2. Section 310.15(B) shall be referenced for ampacity correction factors where the ambient temperature is other than 30°C (86°F).

*Section 240.4(D) shall be referenced for conductor overcurrent protection limitations, except as modified elsewhere in the Code.

Recommended Text if Motion Fails:

Table 310.16 (Ampacities of Insulated Conductors with Not More Than Three Current-Carrying Conductors in Raceway, Cable, or Earth (Directly Buried)

70 - 24

Size AWG or kcmil	Temperature Rating of Conductor [See Table 310.4(A)]						Size AWG or kcmil
	60°C (140°F)	75°C (167°F)	90°C (194°F)	60°C (140°F)	75°C (167°F)	90°C (194°F)	
	Types TW, UF	Types RHW, THHW, THW, THWN, XHHW, XHWN, USE, ZW	Types TBS, SA, SIS, FEP, FEPB, MI, PFA, RHH, RHW-2, THHN, THHW, THW-2, THWN-2, USE-2, XHH, XHHW, XHHW-2, XHWN, XHWN-2, XHHN, Z, ZW-2	Types TW, UF	Types RHW, THHW, THW, THWN, XHHW, XHWN, USE	Types TBS, SA, SIS, THHN, THHW, THW-2, THWN-2, RHH, RHW-2, USE-2, XHH, XHHW, XHHW-2, XHWN, XHWN-2, ZW-2XHHN	
	COPPER			ALUMINUM OR COPPER-CLAD ALUMINUM			
18**	—	—	14	—	—	—	—
16**	—	—	18	—	—	—	—
14**	15	20	25	—	—	—	—
12**	20	25	30	15	20	25	12**
10**	30	35	40	25	30	35	10**
8	40	50	55	35	40	45	8
6	55	65	75	40	50	55	6
4	70	85	95	55	65	75	4
3	85	100	115	65	75	85	3
2	95	115	130	75	90	100	2
1	110	130	145	85	100	115	1
1/0	125	150	170	100	120	135	1/0
2/0	145	175	195	115	135	150	2/0
3/0	165	200	225	130	155	175	3/0
4/0	195	230	260	150	180	205	4/0
250	215	255	290	170	205	230	250
300	240	285	320	195	230	260	300
350	260	310	350	210	250	280	350
400	280	335	380	225	270	305	400
500	320	380	430	260	310	350	500
600	350	420	475	285	340	385	600
700	385	460	520	315	375	425	700
750	400	475	535	320	385	435	750
800	410	490	555	330	395	445	800
900	435	520	585	355	425	480	900
1000	455	545	615	375	445	500	1000
1250	495	590	665	405	485	545	1250
1500	525	625	705	435	520	585	1500

1750	545	650	735	455	545	615	1750
2000	555	665	750	470	560	630	2000

Notes:
1. Section 310.16 shall be referenced for conditions of use.
*2. Section 310.15(B) shall be referenced for the ampacity correction factors where the ambient temperature is other than 30°C (86°F).
**3. Section 310.15(C)(1) shall be referenced for more than three current-carrying conductors.
**Section 240.4(D) shall be referenced for conductor overcurrent protection limitations, except as modified elsewhere in the *Code*.

70 - 24

Table 310.17 Ampacities of Single-Insulated Conductors in Free Air

Size AWG or kcmil	Temperature Rating of Conductor [See Table 310.4(A)]						Size AWG or kcmil
	60°C (140°F)	**75°C (167°F)**	**90°C (194°F)**	**60°C (140°F)**	**75°C (167°F)**	**90°C (194°F)**	
	Types TW, UF	**Types RHW, THHW, THW, THWN, XHHW, XHWN, ZW**	**Types TBS, SA, SIS, FEP, FEPB, MI, PFA, RHH, RHW-2, THHN, THHW, THW-2, THWN-2, USE-2, XHH, XHHW, XHHW-2, XHWN, XHWN-2, XHHN, Z, ZW-2**	**Types TW, UF**	**Types RHW, THHW, THW, THWN, XHHW, XHWN**	**Types TBS, SA, SIS, THHN, THHW, THW-2, THWN-2, RHH, RHW-2, USE-2, XHH, XHHW, XHHW-2, XHWN, XHWN-2, ZW-2XHHN**	
	COPPER			**ALUMINUM OR COPPER-CLAD ALUMINUM**			
18	—	—	18	—	—	—	—
16	—	—	24	—	—	—	—
14**	25	30	35	—	—	—	—
12**	30	35	40	25	30	35	12**
10**	40	50	55	35	40	45	10**
8	60	70	80	45	55	60	8
6	80	95	105	60	75	85	6
4	105	125	140	80	100	115	4
3	120	145	165	95	115	130	3
2	140	170	190	110	135	150	2
1	165	195	220	130	155	175	1
1/0	195	230	260	150	180	205	1/0
2/0	225	265	300	175	210	235	2/0
3/0	260	310	350	200	240	270	3/0
4/0	300	360	405	235	280	315	4/0
250	340	405	455	265	315	355	250
300	375	445	500	290	350	395	300
350	420	505	570	330	395	445	350
400	455	545	615	355	425	480	400
500	515	620	700	405	485	545	500

70 - 24	600	575	690	780	455	545	615	600
	700	630	755	850	500	595	670	700
	750	655	785	885	515	620	700	750
	800	680	815	920	535	645	725	800
	900	730	870	980	580	700	790	900
	1000	780	935	1055	625	750	845	1000
	1250	890	1065	1200	710	855	965	1250
	1500	980	1175	1325	795	950	1070	1500
	1750	1070	1280	1445	875	1050	1185	1750
	2000	1155	1385	1560	960	1150	1295	2000

Notes:
1. Section 310.17 shall be referenced for conditions of use.
*2. Section 310.15(B) shall be referenced for the ampacity correction factors where the ambient temperature is other than 30°C (86°F).
**Section 240.4(D) shall be referenced for conductor overcurrent protection limitations, except as modified elsewhere in the *Code*.

Motion Seq#	**Certified Amending Motion:** Accept Public Comment No. 700
70 - 25	**Recommended Text if Motion Passes:** **314.24 (B) Outlet and Device Boxes with Enclosed Devices or Utilization Equipment.** Outlet and device boxes that enclose devices or utilization equipment shall have a minimum internal depth that accommodates the rearward projection of the equipment and the size of the conductors that supply the equipment. The internal depth shall include, where used, that of any extension boxes, plaster rings, or raised covers, <u>but exclude rear space beginning at the front of clamps or knockouts containing wiring</u>. The internal depth shall comply with all applicable provisions of 314.24(B)(1) through (B)(5).
	Recommended Text if Motion Fails: **314.24 (B) Outlet and Device Boxes with Enclosed Devices or Utilization Equipment.** Outlet and device boxes that enclose devices or utilization equipment shall have a minimum internal depth that accommodates the rearward projection of the equipment and the size of the conductors that supply the equipment. The internal depth shall include, where used, that of any extension boxes, plaster rings, or raised covers. The internal depth shall comply with all applicable provisions of 314.24(B)(1) through (B)(5).

Motion Seq#	**Certified Amending Motion:** Accept Public Comment No. 1502
70 - 26	**Recommended Text if Motion Passes:** **334.10 Uses Permitted.** Type NM and Type NMC cables shall be permitted to be used in the following, except as prohibited in 334.12: 1. One- and two-family dwellings and their attached or detached garages, and their storage buildings. 2. Multi-family dwellings permitted to be of Types III, IV, and V construction that are 4 stories or fewer. 3. <u>Dwelling units within Type I or Type II construction where the cable does not leave the floor or dwelling unit from which the circuits originate.</u> 4. Other structures permitted to be of Types III, IV, and V construction that are 4 stories or fewer. Cables shall be concealed within walls, floors, or ceilings that provide a thermal barrier of material that has at least a 15-minute finish rating as identified in listings of fire-rated assemblies. Informational Note No. 1: Types of building construction and occupancy classifications are defined in NFPA 220-2018, *Standard on Types of Building Construction*, or the applicable building code, or both. Informational Note No. 2: See Informative Annex E for determination of building types. [NFPA 220, Table 4.1.1] 5. Cable trays in structures permitted to be Types III, IV, or V where the cables are identified for the use. Informational Note: See 310.14(A)(3) for temperature limitation of conductors. 6. Types I and II construction where installed within raceways permitted to be installed in Types I and II construction.
	Recommended Text if Motion Fails: **334.10 Uses Permitted.** Type NM and Type NMC cables shall be permitted to be used in the following, except as prohibited in 334.12: 1. One- and two-family dwellings and their attached or detached garages, and their storage buildings. 2. Multi-family dwellings permitted to be of Types III, IV, and V construction that are 4 stories or fewer. 3. Other structures permitted to be of Types III, IV, and V construction that are 4 stories or fewer. Cables shall be concealed within walls, floors, or ceilings that provide a thermal barrier of material that has at least a 15-minute finish rating as identified in listings of fire-rated assemblies. Informational Note No. 1: Types of building construction and occupancy classifications are defined in NFPA 220-2018, *Standard on Types of Building Construction*, or the applicable building code, or both. Informational Note No. 2: See Informative Annex E for determination of building types. [NFPA 220, Table 4.1.1]

	4. Cable trays in structures permitted to be Types III, IV, or V where the cables are identified for the use. Informational Note: See 310.14(A)(3) for temperature limitation of conductors. 5. Types I and II construction where installed within raceways permitted to be installed in Types I and II construction.

Motion Seq#	**Certified Amending Motion**: Reject Second Revision No. 8187
70 - 27	**Recommended Text if Motion Passes:** **406.3(A)** Receptacles. Receptacles shall be listed and marked with the manufacturer's name or identification and voltage and ampere ratings. ~~Receptacles shall not be permitted to be reconditioned.~~
	Recommended Text if Motion Fails: **406.3(A)** Receptacles. Receptacles shall be listed and marked with the manufacturer's name or identification and voltage and ampere ratings. Receptacles shall not be permitted to be reconditioned.

Motion Seq#	**Certified Amending Motion:** Reject Second Revision No. 8189
70 - 28	**Recommended Text if Motion Passes:** **406.7** Attachment Plugs, Cord Connectors, and Flanged Surface Devices. All attachment plugs, cord connectors, and flanged surface devices (inlets and outlets) shall be listed and marked with the manufacturer's name or identification and voltage and ampere ratings. ~~Attachment plugs, cord connectors, and flanged surface devices shall not be permitted to be reconditioned.~~
	Recommended Text if Motion Fails: **406.7** Attachment Plugs, Cord Connectors, and Flanged Surface Devices. All attachment plugs, cord connectors, and flanged surface devices (inlets and outlets) shall be listed and marked with the manufacturer's name or identification and voltage and ampere ratings. Attachment plugs, cord connectors, and flanged surface devices shall not be permitted to be reconditioned.

Motion Seq#	**Certified Amending Motion:** Accept Public Comment No. 1123
70 - 29	**Recommended Text if Motion Passes:** **408.4(A) Circuit Directory or Circuit Identification.** Every circuit and circuit modification shall be legibly identified as to its clear, evident, and specific purpose or use. The identification shall include an approved degree of detail that allows each circuit to be distinguished from all others, even by unqualified persons. Spare positions that contain unused overcurrent devices or switches shall be described accordingly. The identification shall be included in a circuit directory that is located on the face, inside of, or in an approved location adjacent to the panel door in the case of a panelboard and at each switch or circuit breaker in a switchboard or switchgear. No circuit shall be described in a manner that depends on transient conditions of occupancy.
	Recommended Text if Motion Fails: **408.4(A) Circuit Directory or Circuit Identification.** Every circuit and circuit modification shall be legibly identified as to its clear, evident, and specific purpose or use. The identification shall include an approved degree of detail that allows each circuit to be distinguished from all others. Spare positions that contain unused overcurrent devices or switches shall be described accordingly. The identification shall be included in a circuit directory that is located on the face, inside of, or in an approved location adjacent to the panel door in the case of a panelboard and at each switch or circuit breaker in a switchboard or switchgear. No circuit shall be described in a manner that depends on transient conditions of occupancy.

Motion Seq#	**Certified Amending Motion:** Reject Second Revision No. 8172
	Recommended Text if Motion Passes: ~~**408.8** Reconditioning of Equipment.~~ ~~Reconditioning of equipment within the scope of this article shall be limited as described in 408.8(A) and (B). The reconditioning process shall use design qualified parts verified under applicable standards and be performed in accordance with any instructions provided by the manufacturer. If equipment has been damaged by fire, products of combustion, or water, it shall be specifically evaluated by its manufacturer or a qualified testing laboratory prior to being returned to service.~~ ~~**(A)** Panelboards.~~ ~~Panelboards shall not be permitted to be reconditioned. This shall not prevent the replacement of a panelboard within an enclosure. In the event the replacement has not been listed for the specific enclosure and the available fault current is greater than 10,000 amperes, the completed work shall be field labeled, and any previously applied listing marks on the cabinet that pertain to the panelboard shall be removed.~~ ~~**(B)** Switchboards and Switchgear.~~ ~~Switchboards and switchgear, or sections of switchboards or switchgear, shall be permitted to be reconditioned. Reconditioned switchgear shall be listed or field labeled as *reconditioned*, and previously applied listing marks, if any, within the portions reconditioned shall be removed.~~
70 - 30	**Recommended Text if Motion Fails:** **408.8** Reconditioning of Equipment. Reconditioning of equipment within the scope of this article shall be limited as described in 408.8(A) and (B). The reconditioning process shall use design qualified parts verified under applicable standards and be performed in accordance with any instructions provided by the manufacturer. If equipment has been damaged by fire, products of combustion, or water, it shall be specifically evaluated by its manufacturer or a qualified testing laboratory prior to being returned to service. **(A)** Panelboards. Panelboards shall not be permitted to be reconditioned. This shall not prevent the replacement of a panelboard within an enclosure. In the event the replacement has not been listed for the specific enclosure and the available fault current is greater than 10,000 amperes, the completed work shall be field labeled, and any previously applied listing marks on the cabinet that pertain to the panelboard shall be removed. **(B)** Switchboards and Switchgear. Switchboards and switchgear, or sections of switchboards or switchgear, shall be permitted to be reconditioned. Reconditioned switchgear shall be listed or field labeled as *reconditioned*, and previously applied listing marks, if any, within the portions reconditioned shall be removed.

Motion Seq#	**Certified Amending Motion:** Reject Second Revision No. 8162
70 - 31	**Recommended Text if Motion Passes:** **410.6 Listing Required.** All luminaires, lampholders, and retrofit kits shall be listed. ~~**410.7 Reconditioned Equipment.**~~ ~~Luminaires, lampholders, and retrofit kits shall not be permitted to be reconditioned. If a retrofit kit is installed in a luminaire in accordance with the installation instructions, the retrofitted luminaire shall not be considered reconditioned.~~
	Recommended Text if Motion Fails: **410.6 Listing Required.** All luminaires, lampholders, and retrofit kits shall be listed. **410.7 Reconditioned Equipment.** Luminaires, lampholders, and retrofit kits shall not be permitted to be reconditioned. If a retrofit kit is installed in a luminaire in accordance with the installation instructions, the retrofitted luminaire shall not be considered reconditioned.

Motion Seq#	**Certified Amending Motion:** Reject Second Revision No. 8164
70 - 32	**Recommended Text if Motion Passes:** **411.4** Low-voltage lighting systems shall comply with 411.4(A) or (B).~~ Listed low-voltage lighting systems or a lighting system assembled from listed parts shall not be permitted to be reconditioned.~~
	Recommended Text if Motion Fails: **411.4** Low-voltage lighting systems shall comply with 411.4(A) or (B). Listed low-voltage lighting systems or a lighting system assembled from listed parts shall not be permitted to be reconditioned.

Motion Seq#	**Certified Amending Motion:** Reject Second Revision No. 8222
70 - 33	**Recommended Text if Motion Passes:** ~~**490.49 Reconditioned Switchgear.**~~ ~~Switchgear, or sections of switchgear, within the scope of this article shall be permitted to be reconditioned. The reconditioning process shall use design qualified parts verified under applicable standards and be performed in accordance with any instructions provided by the manufacturer. Reconditioned switchgear shall be listed or field labeled as *reconditioned*, and previously applied listing marks, if any, within the portions reconditioned shall be removed. If equipment has been damaged by fire, products of combustion, or water, it shall be specifically evaluated by its manufacturer or a qualified testing laboratory prior to being returned to service.~~
	Recommended Text if Motion Fails: **490.49 Reconditioned Switchgear.** Switchgear, or sections of switchgear, within the scope of this article shall be permitted to be reconditioned. The reconditioning process shall use design qualified parts verified under applicable standards and be performed in accordance with any instructions provided by the manufacturer. Reconditioned switchgear shall be listed or field labeled as *reconditioned*, and previously applied listing marks, if any, within the portions reconditioned shall be removed. If equipment has been damaged by fire, products of combustion, or water, it shall be specifically evaluated by its manufacturer or a qualified testing laboratory prior to being returned to service.

70-33NFPA 70, *National Electrical Code*
Submitter: George Straniero, AFC Cable Systems

Motion Seq#	**Certified Amending Motion:** Reject an Identifiable Part of Second Revision No. 7979
70 - 34	**Recommended Text if Motion Passes:** **501.10(A)(1)(3) Type MC-HL Cable**. In industrial establishments with restricted public access, where the conditions of maintenance and supervision ensure that only qualified persons service the installation, listed Type MC-HL cable with a gas/vaportight continuous corrugated metallic sheath, an overall jacket of suitable polymeric material, and a separate equipment grounding conductor(s) in accordance with 250.122, and terminated with fittings listed for the location. Type MC-HL cable shall be installed in accordance with the provisions ~~Part II~~ of Article 330, Part II. Listed Type MC-HL cable with an interlocked metallic sheath that meets the crush and impact requirements of Type MC-HL cable with a continuous corrugated metallic sheath, an overall gas/vaportight jacket of suitable polymeric material, and a separate equipment grounding conductor(s) in accordance with 250.122, and terminated with fittings listed for the location. Type MC-HL cable shall be installed in accordance with the provisions of ~~Part II of~~ Article 330, Part II.
	Recommended Text if Motion Fails: **501.10(A)(1)(3)** In industrial establishments with restricted public access, where the conditions of maintenance and supervision ensure that only qualified persons service the installation, listed Type MC-HL cable with a gas/vaportight continuous corrugated metallic sheath, an overall jacket of suitable polymeric material, and a separate equipment grounding conductor(s) in accordance with 250.122, and terminated with fittings listed for the location. Type MC-HL cable shall be installed in accordance with Part II of Article 330.

Motion Seq#	**Certified Amending Motion:** Reject an Identifiable Part of Second Revision No. 7916
70 - 35	**Recommended Text if Motion Passes:** **517.26 Application of Other Articles.** The life safety branch of the essential electrical system shall meet the requirements of Article 700, except as amended by Article 517. 1. Section 700.4 shall not apply. 2. Section 700.10(D)(1) ~~700.10(D)~~ through (D)(3) shall not apply. 3. Section 700.17 shall be replaced with the following: Branch circuits that supply emergency lighting shall be installed to provide service from a source complying with 700.12 when normal supply for lighting is interrupted or where single circuits supply luminaires containing secondary batteries. 4. Section 700.32 shall not apply. Informational Note No. 1: For additional information, see NFPA 110-2019, *Standard for Emergency and Standby Power Systems*. Informational Note No. 2: For additional information, see 517.29 and NFPA 99-2018, *Health Care Facilities Code*.
	Recommended Text if Motion Fails: **517.26 Application of Other Articles.** The life safety branch of the essential electrical system shall meet the requirements of Article 700, except as amended by Article 517. 1. Section 700.4 shall not apply. 2. Section 700.10(D) shall not apply. 3. Section 700.17 shall be replaced with the following: Branch circuits that supply emergency lighting shall be installed to provide service from a source complying with 700.12 when normal supply for lighting is interrupted or where single circuits supply luminaires containing secondary batteries. 4. Section 700.32 shall not apply. Informational Note No. 1: For additional information, see NFPA 110-2019, *Standard for Emergency and Standby Power Systems*. Informational Note No. 2: For additional information, see 517.29 and NFPA 99-2018, *Health Care Facilities Code*.

Motion Seq#	**Certified Amending Motion:** Reject an Identifiable Part of Second Correlating Revision No. 30
70 – 36	**Recommended Text if Motion Passes:** **551.71(F) GFCI Protection**. Ground-fault circuit-interrupter protection shall be provided as required in 210.8(B). ~~GFCI protection shall not be required for other than 125-volt, 15- and 20-ampere receptacles used in the recreational vehicle site equipment.~~ **Informational Note No. 1**: Appliances used within the recreational vehicle can create leakage current levels at the supply receptacle(s) that could exceed the limits of a Class A GFCI device. ~~**Informational Note No. 2**: The definition of a power supply assembly in 551.2 and the definition of a feeder in Article 100 clarifies that the power supply cord to a recreational vehicle is considered a feeder.~~
	Recommended Text if Motion Fails: **551.71(F) GFCI Protection**. Ground-fault circuit-interrupter protection shall be provided as required in 210.8(B). GFCI protection shall not be required for other than 125-volt, 15- and 20-ampere receptacles used in the recreational vehicle site equipment. **Informational Note No. 1**: Appliances used within the recreational vehicle can create leakage current levels at the supply receptacle(s) that could exceed the limits of a Class A GFCI device. **Informational Note No. 2**: The definition of a power supply assembly in 551.2 and the definition of a feeder in Article 100 clarifies that the power supply cord to a recreational vehicle is considered a feeder.

NFPA 70, *National Electrical Code*

Submitter: Nancy Stone, American Honda Motors On Behalf of Automakers: Alliance of Automobile Manufacturers (Alliance) - BMW Group, FCA US LLC, Ford Motor Company, General Motors, Jaguar Land Rover, Mazda, Mercedes-Benz USA, Mitsubishi Motors, Porsche, Toyota, Volkswagen Group of America and Volvo Cars North America; Global Automakers – Aston Martin, Ferrari, Honda, Hyundai, Isuzu, Kia, Maserati, McLaren, Nissan, Subaru, Suzuki, and Toyota; and SAE International.

Motion Seq#	**Certified Amending Motion:** Reject Second Revision No. 7783 including any Related Portions of First Revision No. 8597
70 - 37	**Recommended Text if Motion Passes:** **625.2 ~~Electric Vehicle Power Export Equipment (EVPE).~~** ~~The equipment, including the outlet on the vehicle, that is used to provide electrical power at voltages greater than or equal to 30 V ac or 60 V dc to external loads using the vehicle as the source of supply.~~ ~~Informational Note: Electric vehicle power export equipment and electric vehicle supply equipment are sometimes contained in one piece of equipment, sometimes referred to as a bidirectional EVSE.~~
	Recommended Text if Motion Fails: **625.2 Electric Vehicle Power Export Equipment (EVPE).** The equipment, including the outlet on the vehicle, that is used to provide electrical power at voltages greater than or equal to 30 V ac or 60 V dc to external loads using the vehicle as the source of supply. Informational Note: Electric vehicle power export equipment and electric vehicle supply equipment are sometimes contained in one piece of equipment, sometimes referred to as a bidirectional EVSE.

Submitter: D. Douglas Burkett, Ford Motor Company, representing Automakers Alliance, Global Automakers and SAE International

Motion Seq#	**Certified Amending Motion:** Accept Public Comment No. 1590
70 - 38	**Recommended Text if Motion Passes:** **625.5** Listed. All electric vehicle power transfer system equipment external to the vehicle e~~quipment covered by the scope of this article s~~hall be listed. **Recommended Text if Motion Fails:** **625.5** Listed. All equipment covered by the scope of this article shall be listed.

Motion Seq#	**Certified Amending Motion:** Reject an Identifiable Part of Second Correlating Revision No. 21
70 - 39	**Recommended Text if Motion Passes:** **625.42 Rating.** The power transfer equipment shall have sufficient rating to supply the load served. Electric vehicle charging loads shall be considered to be continuous loads for the purposes of this article. Service and feeder shall be sized in accordance with the product ratings. Where an automatic load management system is used, the maximum equipment load on a service and feeder shall be the maximum load permitted by the automatic load management system. Adjustable settings shall only be allowed ~~permitted~~ on fixed-in-place equipment ~~only~~. If adjustments have an impact on the rating label, those changes shall be in accordance with manufacturer's instructions, and the adjusted rating shall appear with sufficient durability to withstand the environment involved on the rating label. Electric vehicle supply equipment with restricted access to an ampere adjusting means shall be permitted to have ampere ratings that are equal to the adjusted current setting. Sizing the service and feeder to match the adjusting means shall be permitted. Restricted access shall prevent the user from gaining access to the adjusting means. Restricted access shall be accomplished by at least one of the following: 1. A cover or door that requires the use of a tool to open 2. Locked doors accessible only to qualified personnel 3. Password protected commissioning software accessible only to qualified personnel
	Recommended Text if Motion Fails: **625.42 Rating.** The power transfer equipment shall have sufficient rating to supply the load served. Electric vehicle charging loads shall be considered to be continuous loads for the purposes of this article. Service and feeder shall be sized in accordance with the product ratings. Where an automatic load management system is used, the maximum equipment load on a service and feeder shall be the maximum load permitted by the automatic load management system. Adjustable settings shall be permitted on fixed-in-place equipment only. If adjustments have an impact on the rating label, those changes shall be in accordance with manufacturer's instructions, and the adjusted rating shall appear with sufficient durability to withstand the environment involved on the rating label. Electric vehicle supply equipment with restricted access to an ampere adjusting means shall be permitted to have ampere ratings that are equal to the adjusted current setting. Sizing the service and feeder to match the adjusting means shall be permitted. Restricted access shall prevent the user from gaining access to the adjusting means. Restricted access shall be accomplished by at least one of the following: 1. A cover or door that requires the use of a tool to open 2. Locked doors accessible only to qualified personnel **3.** Password protected commissioning software accessible only to qualified personnel

NFPA 70, *National Electrical Code*

Submitter: Nancy Stone, American Honda Motors, On Behalf of Automakers: Alliance of Automobile Manufacturers (Alliance) - BMW Group, FCA US LLC, Ford Motor Company, General Motors, Jaguar Land Rover, Mazda, Mercedes-Benz USA, Mitsubishi Motors, Porsche, Toyota, Volkswagen Group of America and Volvo Cars North America; Global Automakers – Aston Martin, Ferrari, Honda, Hyundai, Isuzu, Kia, Maserati, McLaren, Nissan, Subaru, Suzuki, and Toyota; and SAE International.

Motion Seq#	**Certified Amending Motion:** Accept an Identifiable Part of Public Comment No. 1480
	Recommended Text if Motion Passes: **625.48 Interactive Systems.** EVSE that incorporates a power export function and that is part of an interactive system that serves as an optional standby system, an electric power production source, or a bidirectional power feed shall be listed and marked as suitable for that purpose. When used as an optional standby system, the requirements of Article 702 shall apply; when used as an electric power production source, the requirements of Article 705 shall apply. ~~EVPE that consists of a receptacle outlet only shall be in accordance with 625.60~~. Informational Note: For further information on supply equipment, see ANSI/UL 1741, *Standard for Inverters, Converters, Controllers and Interconnection System Equipment for Use with Distributed Energy Resources*, and ANSI/UL 9741, *Bidirectional Electric Vehicle (EV) Charging System Equipment*; for vehicle interactive systems, see SAE J3072, *Standard for Interconnection Requirements for Onboard, Utility-Interactive Inverter Systems*.
70 - 40	**Recommended Text if Motion Fails:** **625.48 Interactive Systems.** EVSE that incorporates a power export function and that is part of an interactive system that serves as an optional standby system, an electric power production source, or a bidirectional power feed shall be listed and marked as suitable for that purpose. When used as an optional standby system, the requirements of Article 702 shall apply; when used as an electric power production source, the requirements of Article 705 shall apply. EVPE that consists of a receptacle outlet only shall be in accordance with 625.60. Informational Note: For further information on supply equipment, see ANSI/UL 1741, *Standard for Inverters, Converters, Controllers and Interconnection System Equipment for Use with Distributed Energy Resources*, and ANSI/UL 9741, *Bidirectional Electric Vehicle (EV) Charging System Equipment*; for vehicle interactive systems, see SAE J3072, *Standard for Interconnection Requirements for Onboard, Utility-Interactive Inverter Systems*.

Motion Seq#	**Certified Amending Motion:** Reject Second Revision No. 7522
70 - 41	**Recommended Text if Motion Passes:** **695.10 Listed Equipment.** Diesel engine fire pump controllers, electric fire pump controllers, electric motors, fire pump power transfer switches, foam pump controllers, and limited service controllers shall be listed for fire pump service. [20**:**9.5.1.1, 10.1.2.1, 12.1.3.1] ~~Fire pump controllers and transfer switches shall not be permitted to be reconditioned.~~
	Recommended Text if Motion Fails: **695.10 Listed Equipment.** Diesel engine fire pump controllers, electric fire pump controllers, electric motors, fire pump power transfer switches, foam pump controllers, and limited service controllers shall be listed for fire pump service. [20**:**9.5.1.1, 10.1.2.1, 12.1.3.1] Fire pump controllers and transfer switches shall not be permitted to be reconditioned.

Motion Seq#	**Certified Amending Motion:** Reject Second Revision No. 7584
70 - 42	**Recommended Text if Motion Passes:** **700.5 (C) Automatic Transfer Switches.** Automatic transfer switches shall be electrically operated and mechanically held. ~~Automatic transfer switches shall not be permitted to be reconditioned.~~
	Recommended Text if Motion Fails: **700.5 (C) Automatic Transfer Switches.** Automatic transfer switches shall be electrically operated and mechanically held. Automatic transfer switches shall not be permitted to be reconditioned.

Motion Seq#	**Certified Amending Motion:** Reject Second Revision No. 7586
70 - 43	**Recommended Text if Motion Passes:** **701.5(C) Automatic Transfer Switches.** Automatic transfer switches shall be electrically operated and mechanically held. ~~Automatic transfer switches shall not be permitted to be reconditioned.~~ **Recommended Text if Motion Fails:** **701.5(C) Automatic Transfer Switches.** Automatic transfer switches shall be electrically operated and mechanically held. Automatic transfer switches shall not be permitted to be reconditioned.

Motion Seq#	**Certified Amending Motion:** Reject an Identifiable Part of Second Revision No. 7588
70 - 44	**Recommended Text if Motion Passes:** **702.5 Transfer Equipment.** (A) General. Transfer equipment shall be required for all standby systems subject to the requirements of this article and for which an electric utility supply is either the normal or standby source. ~~Transfer switches shall not be permitted to be reconditioned~~. *Exception: Temporary connection of a portable generator without transfer equipment shall be permitted where conditions of maintenance and supervision ensure that only qualified persons service the installation and where the normal supply is physically isolated by a lockable disconnecting means or by disconnection of the normal supply conductors.* (B) Meter Mounted Transfer Switches. Transfer switches installed between the utility meter and the meter enclosure shall be listed meter-mounted transfer switches and shall be approved. Meter-mounted transfer switches shall be of the manual type unless rated as determined by 702.4(B)(2). Informational Note: For more information, see UL 1008M, *Transfer Switch Equipment, Meter Mounted*. (C) Documentation. In other than dwelling units, the short-circuit current rating of the transfer equipment, based on the specific overcurrent protective device type and settings protecting the transfer equipment, shall be field marked on the exterior of the transfer equipment. (D) Inadvertent Interconnection. Transfer equipment shall be suitable for the intended use and shall be listed, designed, and installed so as to prevent the inadvertent interconnection of all sources of supply in any operation of the transfer equipment. (E) Parallel Installation. Transfer equipment and electric power production systems installed to permit operation in parallel with the normal source shall also meet the requirements of Article 705.
	Recommended Text if Motion Fails: **702.5 Transfer Equipment.** (A) General. Transfer equipment shall be required for all standby systems subject to the requirements of this article and for which an electric utility supply is either the normal or standby source. Transfer switches shall not be permitted to be reconditioned. *Exception: Temporary connection of a portable generator without transfer equipment shall be permitted where conditions of maintenance and supervision ensure that only qualified persons service the installation and where the normal supply is physically isolated by a lockable disconnecting means or by disconnection of the normal supply conductors.* (B) Meter Mounted Transfer Switches. Transfer switches installed between the utility meter and the meter enclosure shall be listed meter-mounted transfer switches and shall be approved. Meter-mounted transfer switches shall be of the manual type unless rated as determined by 702.4(B)(2). Informational Note: For more information, see UL 1008M, *Transfer Switch Equipment, Meter Mounted*.

	(C) Documentation. In other than dwelling units, the short-circuit current rating of the transfer equipment, based on the specific overcurrent protective device type and settings protecting the transfer equipment, shall be field marked on the exterior of the transfer equipment. (D) Inadvertent Interconnection. Transfer equipment shall be suitable for the intended use and shall be listed, designed, and installed so as to prevent the inadvertent interconnection of all sources of supply in any operation of the transfer equipment. (E) Parallel Installation. Transfer equipment and electric power production systems installed to permit operation in parallel with the normal source shall also meet the requirements of Article 705.

Motion Seq#	**Certified Amending Motion:** Reject Second Revision No. 8159 and any Related Portions of First Revision No. 8608
70 - 45	**Recommended Text if Motion Passes:** ~~**705.11 (D) Bonding and Grounding.**~~ ~~All metal enclosures, metallic wiring methods, and metal parts associated with the power source output conductors in 705.11(B) shall be bonded in accordance with 250.92(B). This metallic equipment shall be connected to the grounding electrode system for the service at the power source disconnecting means with only one of the methods in 705.11 (D)(1) or (D) (2). Where the power sources use a grounded conductor,705.11 (D) (1) shall apply. The grounding terminal or bus for the disconnecting means in 705.11(F) shall be connected to a supply side bonding jumper, sized in accordance with 250.102, based on the size of the conductors in 705.11(B). The supply side bonding jumper shall be connected to the grounded service conductor within or ahead of the service disconnecting means. If the power production equipment requires a grounded conductor, no connection shall be made between the supply side bonding jumper and the grounded conductor at the disconnecting means in 705.11(F).~~ ~~(1) Grounded Conductor Brought to Power Source Disconnecting Means.~~ ~~Where a grounded service conductor is brought to the power source disconnecting means, the grounded conductor shall be connected to the disconnecting means grounded conductor terminal or bus. A bonding conductor shall connect the grounded service conductor to the metallic equipment enclosing the power source output circuit conductor. This bonding conductor shall be sized in accordance with 250.102 based on the size of the power source output circuit conductors.~~ ~~(2) Grounded Conductor Not Brought to Power Source Disconnecting Means.~~ ~~Where a grounded service conductor is not brought to the power source disconnecting means, the metallic equipment enclosing the power source output circuit conductor shall be bonded to the g rounding electrode system using a separate bonding conductor sized in accordance with 250.102 based on the size of the power source output circuit conductors.~~
	Recommended Text if Motion Fails: **705.11 (D) Bonding and Grounding.** All metal enclosures, metallic wiring methods, and metal parts associated with the conductors in 705.11(B) shall be bonded in accordance with 250.92(B). The grounding terminal or bus for the disconnecting means in 705.11(F) shall be connected to a supply side bonding jumper, sized in accordance with 250.102, based on the size of the conductors in 705.11(B). The supply side bonding jumper shall be connected to the grounded service conductor within or ahead of the service disconnecting means. If the power production equipment requires a grounded conductor, no connection shall be made between the supply side bonding jumper and the grounded conductor at the disconnecting means in 705.11(F).

Motion Seq#	**Certified Amending Motion:** Accept an Identifiable Part of Public Comment No. 315
70 - 46	**Recommended Text if Motion Passes:** **705.11(F) Disconnecting Means.** The power source disconnecting means shall meet the requirements of 705.20. The power source disconnecting means shall ~~not~~ be considered as one of the service disconnecting means as required by 230.70. The requirements of 230.71and 230.72 shall apply to the power source disconnecting means that are installed in accordance with 230.2(A)(5) or 230.40, Exception No. 5. The conductors connected to the service conductors shall be terminated on the line side of the disconnect. Equipment containing a power source disconnecting means rated 1000 volts or less shall be listed as suitable for use as service equipment. **Recommended Text if Motion Fails:** **705.11(F) Disconnecting Means.** The power source disconnecting means shall meet the requirements of 705.20. The power source disconnecting means shall not be considered as one of the service disconnecting means as required by 230.70. The requirements of 230.71and 230.72 shall apply to the power source disconnecting means that are installed in accordance with 230.2(A)(5) or 230.40, Exception No. 5. The conductors connected to the service conductors shall be terminated on the line side of the disconnect. Equipment containing a power source disconnecting means rated 1000 volts or less shall be listed as suitable for use as service equipment.

Motion Seq#	**Certified Amending Motion:** Reject Second Revision No. 7517
70 - 47	**Recommended Text if Motion Passes:** **708.24(A) General.** Transfer equipment, including automatic transfer switches, shall be automatic and identified for emergency use. Transfer equipment shall be designed and installed to prevent the inadvertent interconnection of normal and critical operations sources of supply in any operation of the transfer equipment. Transfer equipment and electric power production systems installed to permit operation in parallel with the normal source shall meet the requirements of Article 705. ~~Transfer equipment shall not be permitted to be reconditioned.~~
	Recommended Text if Motion Fails: **708.24(A) General.** Transfer equipment, including automatic transfer switches, shall be automatic and identified for emergency use. Transfer equipment shall be designed and installed to prevent the inadvertent interconnection of normal and critical operations sources of supply in any operation of the transfer equipment. Transfer equipment and electric power production systems installed to permit operation in parallel with the normal source shall meet the requirements of Article 705. Transfer equipment shall not be permitted to be reconditioned.

Motion Seq#	**Certified Amending Motion:** Accept Public Comment No. 501

70 – 48

Recommended Text if Motion Passes:

Table 725.154 Applications of Listed Class 2, Class 3, and PLTC Cables.
Class 2, Class 3, and PLTC cables shall comply with any of the requirements described in 725.154(A) through (C) and as indicated in Table 725.154.
Table 725.154 Applications of Listed Class 2, Class 3, CMUC, and PLTC Cables in Buildings

Applications		-	-	Cable Type			
		CL2P & CL3P	CL2R & CL3R	CL2 & CL3	CL2X & CL3X	CMUC	PLTC
In ducts specifically fabricated for environmental air as described in 300.22(B)	~~Exposed to airflow~~In fabricated ducts	Y*	N	N	N	N	N
	In metal raceway that complies with 300.22(B)	Y*	Y*	Y*	Y*	N	Y*
In other spaces used for environmental air (plenums) as described in 300.22(C)	~~Exposed to airflow~~In other spaces used for environmental air	Y*	N	N	N	N	N
	In metal raceway that complies with 300.22(C)	Y*	Y*	Y*	Y*	N	Y*
	In plenum communications raceways	Y*	N	N	N	N	N
	In plenum cable routing assemblies	Y*	N	N	N	N	N
	Supported by open metal cable trays	Y*	N	N	N	N	N
	Supported by solid bottom metal cable trays with solid metal covers	Y*	Y*	Y*	Y*	N	N
In risers	In vertical runs	Y*	Y*	N	N	N	N
	In metal raceways	Y*	Y*	Y*	Y*	N	Y*
	In fireproof shafts	Y*	Y*	Y*	Y*	N	Y*
	In plenum communications raceways	Y*	Y*	N	N	N	N
	In plenum cable routing assemblies	Y*	Y*	N	N	N	N
	In riser communications raceways	Y*	Y*	N	N	N	N
	In riser cable routing assemblies	Y*	Y*	N	N	N	N
	In one- and two-family dwellings	Y*	Y*	Y*	Y*	N	Y*
Within buildings in other than air-handling spaces and risers	General	Y*	Y*	Y*	Y*	N	Y*
	In one- and two-family dwellings	Y*	Y*	Y*	Y*	Y*	Y*

	In multifamily dwellings	Y*	Y*	Y*	Y*	Y*	Y*
	In nonconcealed spaces	Y*	Y*	Y*	Y*	Y*	Y*
	Supported by cable trays	Y*	Y*	Y*	N	N	Y*
	Under carpet, modular flooring, and planks	N	N	N	N	Y*	N
	In cross-connect arrays	Y*	Y*	Y*	N	N	Y*
	In any raceway recognized in Chapter 3	Y*	Y*	Y*	Y*	N	Y*
	In plenum communications raceways	Y*	Y*	Y*	N	N	Y*
	In plenum cable routing assemblies	Y*	Y*	Y*	N	N	Y*
	In riser communications raceways	Y*	Y*	Y*	N	N	Y*
	In riser cable routing assemblies	Y*	Y*	Y*	N	N	Y*
	In general-purpose communications raceways	Y*	Y*	Y*	N	N	Y*
	In general-purpose cable routing assemblies	Y*	Y*	Y*	N	N	Y*

70 – 48

Note: “N” indicates that the cable type shall not be permitted to be installed in the application.
“Y*” indicates that the cable type shall be permitted to be installed in the application, subject to the limitations described in 725.130 through 725.143.
(A) Class 2 and Class 3 Cable Substitutions.
The substitutions for Class 2 and Class 3 cables listed in Table 725.154(A) and illustrated in Figure 725.154(A) shall be permitted. Where substitute cables are installed, the wiring requirements of Article 725, Parts I and III, shall apply.
Informational Note: For information on Types CMP, CMR, CM, and CMX, see 805.179.
Table 725.154(A) Cable Substitutions

Cable Type	Permitted Substitutions
CL3P	CMP
CL2P	CMP, CL3P
CL3R	CMP, CL3P, CMR
CL2R	CMP, CL3P, CL2P, CMR, CL3R
PLTC	-
CL3	CMP, CL3P, CMR, CL3R, CMG, CM, PLTC
CL2	CMP, CL3P, CL2P, CMR, CL3R, CL2R, CMG, CM, PLTC, CL3
CL3X	CMP, CL3P, CMR, CL3R, CMG, CM, PLTC, CL3, CMX
CL2X	CMP, CL3P, CL2P, CMR, CL3R, CL2R, CMG, CM, PLTC, CL3, CL2, CMX, CL3X

Figure 725.154(A) Cable Substitution Hierarchy.

70 – 48

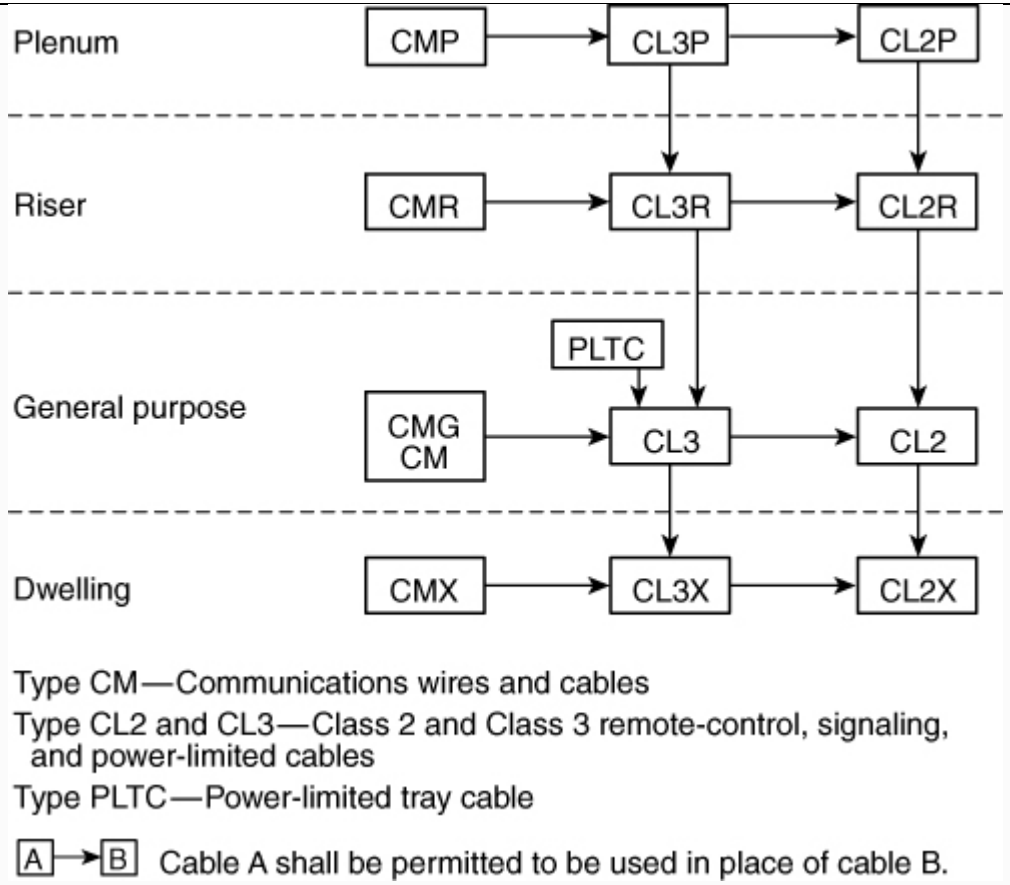

(B) Class 2, Class 3, PLTC Circuit Integrity (CI) Cable or Electrical Circuit Protective System.
Circuit integrity (CI) cable or a listed electrical circuit protective system shall be permitted for use in remote control, signaling, or power-limited systems that supply critical circuits to ensure survivability for continued circuit operation for a specified time under fire conditions.
(C) Thermocouple Circuits.
Conductors in Type PLTC cables used for Class 2 thermocouple circuits shall be permitted to be any of the materials used for thermocouple extension wire.

Recommended Text if Motion Fails:

Table 725.154 Applications of Listed Class 2, Class 3, and PLTC Cables.
Class 2, Class 3, and PLTC cables shall comply with any of the requirements described in 725.154(A) through (C) and as indicated in Table 725.154.
Table 725.154 Applications of Listed Class 2, Class 3, CMUC, and PLTC Cables in Buildings

70 – 48

Applications		Cable Type					
		CL2P & CL3P	CL2R & CL3R	CL2 & CL3	CL2X & CL3X	CMUC	PLTC
In ducts specifically fabricated for environmental air as described in 300.22(B)	Exposed to airflow	Y*	N	N	N	N	N
	In metal raceway that complies with 300.22(B)	Y*	Y*	Y*	Y*	N	Y*
In other spaces used for environmental air (plenums) as described in 300.22(C)	Exposed to airflow	Y*	N	N	N	N	N
	In metal raceway that complies with 300.22(C)	Y*	Y*	Y*	Y*	N	Y*
	In plenum communications raceways	Y*	N	N	N	N	N
	In plenum cable routing assemblies	Y*	N	N	N	N	N
	Supported by open metal cable trays	Y*	N	N	N	N	N
	Supported by solid bottom metal cable trays with solid metal covers	Y*	Y*	Y*	Y*	N	N
In risers	In vertical runs	Y*	Y*	N	N	N	N
	In metal raceways	Y*	Y*	Y*	Y*	N	Y*
	In fireproof shafts	Y*	Y*	Y*	Y*	N	Y*
	In plenum communications raceways	Y*	Y*	N	N	N	N
	In plenum cable routing assemblies	Y*	Y*	N	N	N	N
	In riser communications raceways	Y*	Y*	N	N	N	N
	In riser cable routing assemblies	Y*	Y*	N	N	N	N
	In one- and two-family dwellings	Y*	Y*	Y*	Y*	N	Y*
Within buildings in other than air-handling spaces and risers	General	Y*	Y*	Y*	Y*	N	Y*
	In one- and two-family dwellings	Y*	Y*	Y*	Y*	Y*	Y*
	In multifamily dwellings	Y*	Y*	Y*	Y*	Y*	Y*
	In nonconcealed spaces	Y*	Y*	Y*	Y*	Y*	Y*
	Supported by cable trays	Y*	Y*	Y*	N	N	Y*
	Under carpet, modular flooring, and planks	N	N	N	N	Y*	N
	In cross-connect arrays	Y*	Y*	Y*	N	N	Y*
	In any raceway recognized in Chapter 3	Y*	Y*	Y*	Y*	N	Y*
	In plenum communications raceways	Y*	Y*	Y*	N	N	Y*
	In plenum cable routing assemblies	Y*	Y*	Y*	N	N	Y*
	In riser communications raceways	Y*	Y*	Y*	N	N	Y*
	In riser cable routing assemblies	Y*	Y*	Y*	N	N	Y*
	In general-purpose communications raceways	Y*	Y*	Y*	N	N	Y*
	In general-purpose cable routing assemblies	Y*	Y*	Y*	N	N	Y*

70 - 48

Note: “N” indicates that the cable type shall not be permitted to be installed in the application.
“Y*” indicates that the cable type shall be permitted to be installed in the application, subject to the limitations described in 725.130 through 725.143.
(A) Class 2 and Class 3 Cable Substitutions.
The substitutions for Class 2 and Class 3 cables listed in Table 725.154(A) and illustrated in Figure 725.154(A) shall be permitted. Where substitute cables are installed, the wiring requirements of Article 725, Parts I and III, shall apply.
Informational Note: For information on Types CMP, CMR, CM, and CMX, see 805.179.
Table 725.154(A) Cable Substitutions

Cable Type	Permitted Substitutions
CL3P	CMP
CL2P	CMP, CL3P
CL3R	CMP, CL3P, CMR
CL2R	CMP, CL3P, CL2P, CMR, CL3R
PLTC	
CL3	CMP, CL3P, CMR, CL3R, CMG, CM, PLTC
CL2	CMP, CL3P, CL2P, CMR, CL3R, CL2R, CMG, CM, PLTC, CL3
CL3X	CMP, CL3P, CMR, CL3R, CMG, CM, PLTC, CL3, CMX
CL2X	CMP, CL3P, CL2P, CMR, CL3R, CL2R, CMG, CM, PLTC, CL3, CL2, CMX, CL3X

70 - 48

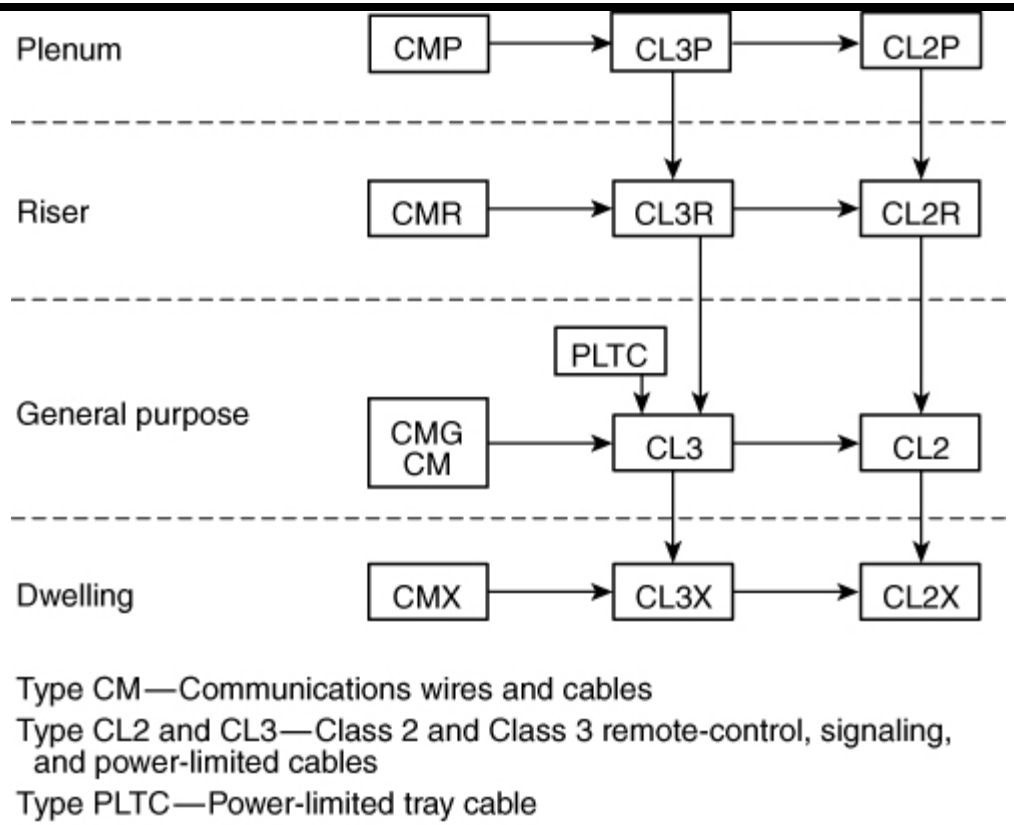

Figure 725.154(A) Cable Substitution Hierarchy.

(B) Class 2, Class 3, PLTC Circuit Integrity (CI) Cable or Electrical Circuit Protective System.

Circuit integrity (CI) cable or a listed electrical circuit protective system shall be permitted for use in remote control, signaling, or power-limited systems that supply critical circuits to ensure survivability for continued circuit operation for a specified time under fire conditions.

(C) Thermocouple Circuits.

Conductors in Type PLTC cables used for Class 2 thermocouple circuits shall be permitted to be any of the materials used for thermocouple extension wire.

Motion Seq#	**Certified Amending Motion:** Accept Public Comment No. 500

70 – 49

Table 760.154 Applications of Listed PLFA Cables.
PLFA cables shall comply with the requirements described in Table 760.154 or where cable substitutions are made as shown in 760.154(A). Where substitute cables are installed, the wiring requirements of Article 760, Parts I and III, shall apply. Types FPLP-CI, FPLR-CI, and FPL-CI cables shall be permitted to be installed to provide 2-hour circuit integrity rated cables.
Table 760.154 Applications of Listed PLFA Cables in Buildings

Applications		Cable Type		
		FPLP & FPLP-CI	**FPLR & FPLR-CI**	**FPL & FPL-CI**
In ducts specifically fabricated for environmental air as described in 300.22(B)	~~Exposed to airflow~~In fabricated ducts	Y*	N	N
	In metal raceway that complies with 300.22(B)	Y*	Y*	Y*
In other spaces used for environmental air (plenums) as described in 300.22(C)	~~Exposed to airflow~~In other spaces used for environmental air	Y*	N	N
	In metal raceway that complies with 300.22(C)	Y*	Y*	Y*
	In plenum communications raceways	Y*	N	N
	In plenum cable routing assemblies	Y*	N	N
	Supported by open metal cable trays	Y*	N	N
	Supported by solid bottom metal cable trays with solid metal covers	Y*	Y*	Y*
In risers	In vertical runs	Y*	Y*	N
	In metal raceways	Y*	Y*	Y*
	In fireproof shafts	Y*	Y*	Y*
	In plenum communications raceways	Y*	Y*	N
	In plenum cable routing assemblies	Y*	Y*	N
	In riser communications raceways	Y*	Y*	N
	In riser cable routing assemblies	Y*	Y*	N
	In one- and two-family dwellings	Y*	Y*	Y*

70-49	Within buildings in other than air-handling spaces and risers	General	Y*	Y*	Y*
		Supported by cable trays	Y*	Y*	Y*
		In any raceway recognized in Chapter 3	Y*	Y*	Y*
		In plenum communications raceway	Y*	Y*	Y*
		In plenum cable routing assemblies	Y*	Y*	Y*
		In riser communications raceways	Y*	Y*	Y*
		In riser cable routing assemblies	Y*	Y*	Y*
		In general-purpose communications raceways	Y*	Y*	Y*
		In general-purpose cable routing assemblies	Y*	Y*	Y*

Note:
"N" indicates that the cable type shall not be permitted to be installed in the application.
"Y*" indicates that the cable type shall be permitted to be installed in the application subject to the limitations described in 760.130 through 760.145.
(A) Fire Alarm Cable Substitutions.
The substitutions for fire alarm cables listed in Table 760.154(A) and illustrated in Figure 760.154(A) shall be permitted. Where substitute cables are installed, the wiring requirements of Article 760, Parts I and III, shall apply.
Informational Note: For information on communications cables (CMP, CMR, CMG, CM), see 805.179.
Figure 760.154(A) Cable Substitution Hierarchy.

70 - 49

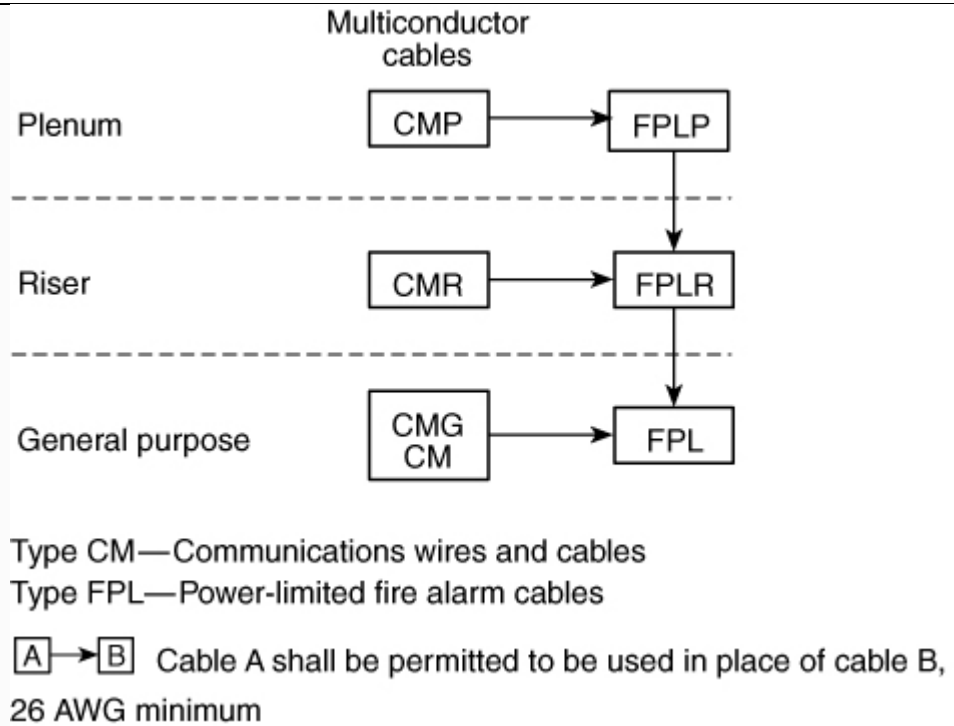

Table 760.154(A) Cable Substitutions

Cable Type	Permitted Substitutions
FPLP	CMP
FPLR	CMP, FPLP, CMR
FPL	CMP, FPLP, CMR, FPLR, CMG, CM

Recommended Text if Motion Fails:

Table 760.154 Applications of Listed PLFA Cables.
PLFA cables shall comply with the requirements described in Table 760.154 or where cable substitutions are made as shown in 760.154(A). Where substitute cables are installed, the wiring requirements of Article 760, Parts I and III, shall apply. Types FPLP-CI, FPLR-CI, and FPL-CI cables shall be permitted to be installed to provide 2-hour circuit integrity rated cables.
Table 760.154 Applications of Listed PLFA Cables in Buildings

70 - 49

Applications		Cable Type		
		FPLP & FPLP-CI	FPLR & FPLR-CI	FPL & FPL-CI
In ducts specifically fabricated for environmental air as described in 300.22(B)	Exposed to airflow	Y*	N	N
	In metal raceway that complies with 300.22(B)	Y*	Y*	Y*
In other spaces used for environmental air (plenums) as described in 300.22(C)	Exposed to airflow	Y*	N	N
	In metal raceway that complies with 300.22(C)	Y*	Y*	Y*
	In plenum communications raceways	Y*	N	N
	In plenum cable routing assemblies	Y*	N	N
	Supported by open metal cable trays	Y*	N	N
	Supported by solid bottom metal cable trays with solid metal covers	Y*	Y*	Y*
In risers	In vertical runs	Y*	Y*	N
	In metal raceways	Y*	Y*	Y*
	In fireproof shafts	Y*	Y*	Y*
	In plenum communications raceways	Y*	Y*	N
	In plenum cable routing assemblies	Y*	Y*	N
	In riser communications raceways	Y*	Y*	N
	In riser cable routing assemblies	Y*	Y*	N
	In one- and two-family dwellings	Y*	Y*	Y*
Within buildings in other than air-handling spaces and risers	General	Y*	Y*	Y*
	Supported by cable trays	Y*	Y*	Y*
	In any raceway recognized in Chapter 3	Y*	Y*	Y*
	In plenum communications raceway	Y*	Y*	Y*
	In plenum cable routing assemblies	Y*	Y*	Y*
	In riser communications raceways	Y*	Y*	Y*
	In riser cable routing assemblies	Y*	Y*	Y*
	In general-purpose communications raceways	Y*	Y*	Y*
	In general-purpose cable routing assemblies	Y*	Y*	Y*

70 - 49

Note:
"N" indicates that the cable type shall not be permitted to be installed in the application.
"Y*" indicates that the cable type shall be permitted to be installed in the application subject to the limitations described in 760.130 through 760.145.

(A) Fire Alarm Cable Substitutions.

The substitutions for fire alarm cables listed in Table 760.154(A) and illustrated in Figure 760.154(A) shall be permitted. Where substitute cables are installed, the wiring requirements of Article 760, Parts I and III, shall apply.

Informational Note: For information on communications cables (CMP, CMR, CMG, CM), see 805.179.

Figure 760.154(A) Cable Substitution Hierarchy.

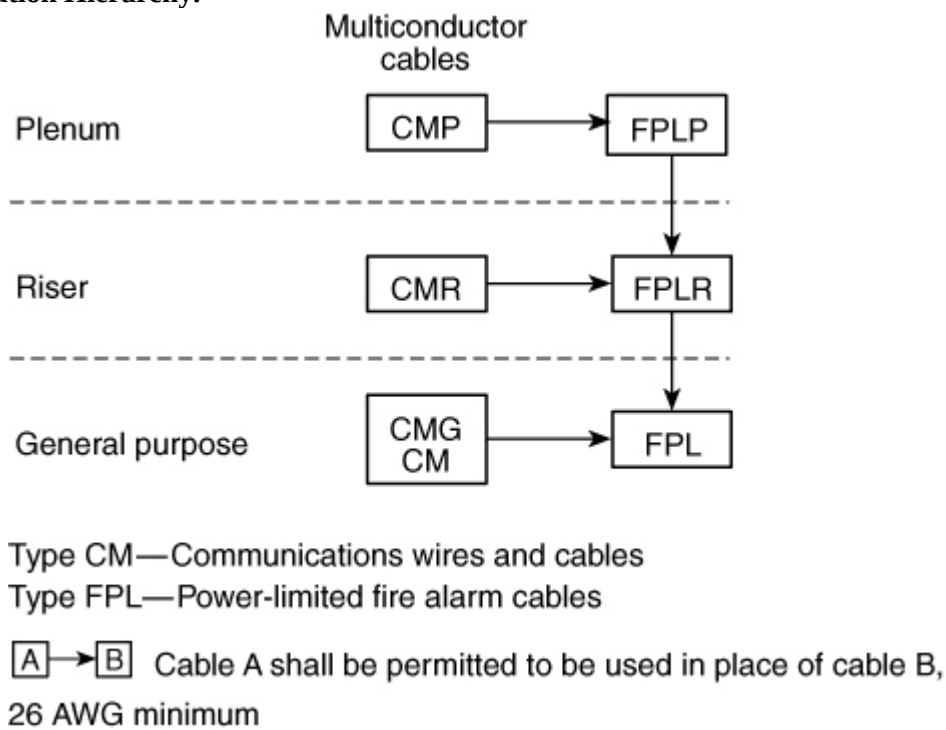

Table 760.154(A) Cable Substitutions

Cable Type	Permitted Substitutions
FPLP	CMP
FPLR	CMP, FPLP, CMR
FPL	CMP, FPLP, CMR, FPLR, CMG, CM

Motion Seq#	**Certified Amending Motion:** Reject Second Revision No. 7509
70 - 50	**Recommended Text if Motion Passes:** ~~800.3(G) Reconditioned Equipment.~~ ~~The requirements of 110.21(A)(2) shall apply.~~
	Recommended Text if Motion Fails: **800.3(G)** Reconditioned Equipment. The requirements of 110.21(A)(2) shall apply.

Motion Seq#	**Certified Amending Motion:** Accept Public Comment No. 516
70 - 51	**Recommended Text if Motion Passes:** **800.182(A) Plenum Cable Routing Assemblies and Plenum Communications Raceways.** Plenum cable routing assemblies and plenum communications raceways shall be listed as having adequate fire-resistant and low-smoke-producing characteristics. Informational Note No. 1: One method of defining cable routing assemblies and communications raceways that have adequate fire-resistant and low-smoke-producing characteristics is that they exhibit a maximum flame spread index of 25 and a maximum smoke developed index of 50 when tested in accordance with ASTM E84-~~17a~~18a, *Standard Test Method for Surface Burning Characteristics of Building Materials*, or ANSI/UL 723-2013, *Standard Test Method for Surface Burning Characteristics of Building Materials*. **Recommended Text if Motion Fails:** **800.182(A) Plenum Cable Routing Assemblies and Plenum Communications Raceways.** Plenum cable routing assemblies and plenum communications raceways shall be listed as having adequate fire-resistant and low-smoke-producing characteristics. Informational Note No. 1: One method of defining cable routing assemblies and communications raceways that have adequate fire-resistant and low-smoke-producing characteristics is that they exhibit a maximum flame spread index of 25 and a maximum smoke developed index of 50 when tested in accordance with ASTM E84-17a, *Standard Test Method for Surface Burning Characteristics of Building Materials*, or ANSI/UL 723-2013, *Standard Test Method for Surface Burning Characteristics of Building Materials*.

Motion Seq#	**Certified Amending Motion:** Accept an Identifiable Part of Public Comment No. 2147
70 - 52	**Recommended Text if Motion Passes:** **840.160 Powering Circuits.** Communications cables covered in 840.48 and those listed in accordance with 805.179, in addition to carrying the communications circuit, shall also be permitted to carry circuits for powering communications equipment listed in accordance with 805.170. The power source shall be listed in accordance with 840.170(G). Installation of the listed 4-pair communications cables for a communications circuit or installation where 4-pair communications cables are substituted for Class 2 and Class 3 cables in accordance with 725.154(A) shall comply with 725.144. Exception: Installing communications cables in compliance with 725.144 shall not be required for listed 4-pair communications cables where the rated current of the power source does not exceed 0.3 amperes in any conductor 24 AWG or larger. Informational Note: A typical communications cable for this application is a 4-pair cable sometimes referred to as Category 5e (or higher) LAN cable or balanced twisted pair cable. These types of cables are often used to provide Ethernet- and Power over Ethernet (PoE)–type services. A large number of such powering cables bundled together can cause overheating of the wiring if not controlled as described in Table 725.144.
	Recommended Text if Motion Fails: **840.160 Powering Circuits**. Communications cables listed in accordance with 805.179, in addition to carrying the communications circuit, shall also be permitted to carry circuits for powering communications equipment listed in accordance with 805.170. The power source shall be listed in accordance with 840.170(G). Installation of the listed 4-pair communications cables for a communications circuit or installation where 4-pair communications cables are substituted for Class 2 and Class 3 cables in accordance with 725.154(A) shall comply with 725.144. Exception: Installing communications cables in compliance with 725.144 shall not be required for listed 4-pair communications cables where the rated current of the power source does not exceed 0.3 amperes in any conductor 24 AWG or larger. Informational Note: A typical communications cable for this application is a 4-pair cable sometimes referred to as Category 5e (or higher) LAN cable or balanced twisted pair cable. These types of cables are often used to provide Ethernet- and Power over Ethernet (PoE)–type services. A large number of such powering cables bundled together can cause overheating of the wiring if not controlled as described in Table 725.144.