NFPA STANDARDS DEVELOPMENT SITE

SECOND DRAFT REPORT

NFPA 1930, Standard on Fire and Emergency Service Use of Thermal Imagers, Two-Way Portable RF Voice Communication Devices, Ground Ladders, and Fire Hose, and Fire Hose Appliances, proposed Edition

1.1 Scope.

This standard defines the minimum requirements for thermal imagers for the fire service; two-way, portable RF voice communications devices for use by emergency services personnel in the hazard zone; the use, maintenance, and service testing of in-service fire department ground ladders; the selection, care, and maintenance of rescue tools; and the care, use, inspection, testing, and replacement of fire hose, couplings, nozzles, and fire hose appliances.

1.2 Purpose.

The purpose of this standard is to specify minimum requirements for the following:

(1) Thermal images for the fire service

(2) Two-way, portable RF voice communications devices for use by emergency services personnel in the hazard zone

(3) Use, maintenance, and service testing of in-service fire department ground ladders

(4) Selection, care, and maintenance of rescue tools

(5) Care, use, inspection, service testing, and replacement of fire hose, couplings, nozzles, and fire hose appliances

1.3* Application.

This standard can be applied as follows:

(1) Chapters 1 through 3 and 4 through 8, and Annex A constitute NFPA 1801.

(2) Chapters 1 through 3 and 9 through 13, and Annex A constitute NFPA 1802.

(3) Chapters 1 through 3 and 14 through 17, and Annex A constitute NFPA 1932.

(4) Chapters 1 through 3 and 18 through 21, and Annex A constitute NFPA 1937.

(5) Chapters 1 through 3 and 22 through 26, and Annexes A, B, and C constitute NFPA 1962.

Chapter 2 Referenced Publications

2.1 General.

The documents or portions thereof listed in this chapter are referenced within this standard and shall be considered part of the requirements of this document.

2.2 NFPA Publications.

National Fire Protection Association, 1 Batterymarch Park, Quincy, MA 02169-7471.

NFPA 24, *Standard for the Installation of Private Fire Service Mains and Their Appurtenances,* 2022 edition.

NFPA 1225 *Standard for Emergency Services Communications,* 2022 edition.

NFPA 1408, *Standard for Training Fire Service Personnel in the Operation, Care, Use, and Maintenance of Thermal Imagers,* 2020 edition.

NFPA 1801, *Standard on Thermal Imagers for the Fire Service,* 2021 edition.

NFPA 1802, *Standard on Two-Way, Portable RF Voice Communications Devices for Use by Emergency Services Personnel in the Hazard Zone,* 2021 edition.

NFPA 1931, *Standard for Manufacturer's Design of Fire Department Ground Ladders,* 2020 edition.

NFPA 1936, *Standard on Rescue Tools,* 2020 edition.

NFPA 1961, *Standard on Fire Hose,* 2020 edition.

NFPA 1963, *Standard for Fire Hose Connections,* 2019 edition.

NFPA 1970, *Standard on Protective Ensembles for Structural and Proximity Firefighting, Work Apparel and Open-Circuit Self-Contained Breathing Apparatus (SCBA) for Emergency Services, and Personal Alert Safety Systems (PASS),* 2024 edition.

NFPA 1981, *Standard on Open-Circuit Self-Contained Breathing Apparatus (SCBA) for Emergency Services,* 2019 edition.

2.3 Other Publications.

2.3.1 ALI Publications.

American Ladder Institute, 330 North Wabash Avenue, Suite 2000, Chicago, IL 60611.

ANSI-ASC A14.2, *American National Standard for Ladders — Portable Metal — Safety Requirements*, 2017.

ANSI-ASC A14.5, *American National Standard for Ladders — Portable Reinforced Plastic — Safety Requirements*, 2017.

2.3.2 APCO Publications.

APCO International, 351 N. Williamson Blvd., Daytona Beach, FL 32114-1112.

P25, *Standard of Requirements (P25 SoR),* 2005.

2.3.3 ASME Publications.

American Society of Mechanical Engineers, Two Park Avenue, New York, NY 10016-5990.

ASME B46.1, *Surface Texture (Surface Roughness, Waviness, and Lay)*, 2009.

ASME Y14.38, *Abbreviations and Acronyms for Use on Drawings and Related Documents*, 2007 (R2013).

ASME Y14.5, *Dimensioning and Tolerancing*, 2009.

2.3.4 ASTM Publications.

ASTM International, 100 Barr Harbor Drive, P.O. Box C700, West Conshohocken, PA 19428-2959.

ASTM B117, *Standard Practice for Operating Salt Spray (Fog) Apparatus*, 2016.

ASTM D1003, *Standard Test Method for Haze and Luminous Transmittance of Transparent Plastics*, 2013.

2.3.5 ISO/IEC Publications.

International Organization for Standardization, ISO Central Secretariat, BIBC II, Chemin de Blandonnet 8, CP 401, 1214 Vernier, Geneva, Switzerland.

IEC 60529, *Degrees of protection provided by enclosures (IP Code)*, Ed. 2.2, 2013/Cor 1:2013.

IEC 61000-6-2, *Electromagnetic compatibility (EMC) — Part 6-2: Generic standards — Immunity for industrial environments*, 2016.

IEC 61000-6-3, *Electromagnetic compatibility (EMC) — Part 6-3: Generic standards — Emission standard for residential, commercial, and light-industrial environments*, 2011.

IEC 62133, *Safety requirements for portable sealed secondary cells, and for batteries made from them, for use in portable applications*, 2017.

ISO 9001, *Quality management systems — Requirements*, 2015.

ISO 17011, *Conformity assessment — General requirements for accreditation bodies accrediting conformity assessment bodies*, 2017.

ISO 17025, *General requirements for the competence of testing and calibration laboratories*, 2005/Cor 1: 2006.

ISO 17493, *Clothing and equipment for protection against heat — Test method for convective heat resistance using a hot air circulating oven*, 2016.

ISO Guide 27, *Guidelines for corrective action to be taken by a certification body in the event of misuse of its mark of conformity*, 1983.

ISO/IEC 17011, *Conformity assessment — General requirements for accreditation bodies accrediting conformity assessment bodies*, 2004.

ISO/IEC 17021-1, *Conformity assessment — Requirements for bodies providing audit and certification of management systems*, 2015.

ISO/IEC 17025, *General requirements for the competence of testing and calibration laboratories*, 2005, Technical Corrigendum 1, 2006.

ISO/IEC 17065, *Conformity assessment — Requirements for bodies certifying products, processes, and services*, 2015.

2.3.6 ITU Publications.

International Telecommunication Union (ITU), Place des Nations, 1211 Geneva 20, Switzerland.

ITU-T P.56, *Objective Measurement of Active Speech Level*, 2011.

ITU-T P.863, *Perceptual Objective Listening Quality Assessment*, 2018.

2.3.7 NIST Publications.

National Institute of Standards and Technology, 100 Bureau Drive, Stop 1070, Gaithersburg, MD 20899-1070.

NIST Technical Note 1630, *Evaluation of Image Quality of Thermal Imagers Used by the Fire Service*, February 2009.

PCs [1] SR-16 Hide Legisl

2.3.8 TIA Publications.

Telecommunications Industry Association, 1310 North Courthouse Road, Suite 890, Arlington, VA 22201.

TIA-102.AABD, *Project 25 Trunking Procedures*, 2014.

TIA-102.CAAA-F, *Project 25 Digital C4FM/CQPSK Transceiver Measurement Methods*, 2021.

TIA-102.CAAB-E, *Land Mobile Radio Transceiver Performance Recommendations, Digital Radio Technology, C4FM/CQPSK Modulation*, 2021.

TIA-603-E, *Land Mobile FM or PM — Communications Equipment — Measurement and Performance Standards*, 2016.

TIA-4950-A, *Requirements for Battery-Powered, Portable Land Mobile Radio Applications in Class I, II, III, Division I, Hazardous (Classified) Locations*, 2014.

TIA-4950-B, *Requirements for Battery-Powered, Portable Land Mobile Radio Applications in Class I, II, III, Division I, Hazardous (Classified) Locations*, 2020.

TIA-5045, *Numeric Identifier for Conventional Analog Operation,* 2017.

PCs [1] SR-14 Hide Legisl

2.3.9 UL Publications.

Underwriters Laboratories Inc., 333 Pfingsten Road, Northbrook, IL 60062-2096.

UL 913, *Intrinsically Safe Apparatus and Associated Apparatus for Use in Class I, II, III, Division 1, Hazardous (Classified) Locations*, sixth edition, 2002.

UL 1642, *Lithium Batteries*, 2012, revised 2015.

UL 2054, *Household and Commercial Batteries*, 2004, revised 2011.

UL 121201, *Nonincendive Electrical Equipment for Use in Class I and II, Division 2 and Class III, Divisions 1 and 2 Hazardous (Classified) Locations*, ninth edition, 2017.

2.3.10 Other Publications.

Merriam-Webster's Collegiate Dictionary, 11th edition, Merriam-Webster, Inc., Springfield, MA, 2020.

2.4 References for Extracts in Mandatory Sections.

NFPA 3, *Standard for Commissioning of Fire Protection and Life Safety Systems,* 2021 edition.

NFPA 1035, *Standard on Fire and Life Safety Educator, Public Information Officer, Youth Firesetter Intervention Specialist, and Youth Firesetter Program Manager Professional Qualifications,* 2015 edition.

NFPA 1521, *Standard for Fire Department Safety Officer Professional Qualifications,* 2020 edition.

NFPA 1901, *Standard for Automotive Fire Apparatus,* 2016 edition.

NFPA 1931, *Standard for Manufacturer's Design of Fire Department Ground Ladders,* 2020 edition.

NFPA 1961, *Standard on Fire Hose,* 2020 edition.

Chapter 3 Definitions

Save As Word Show Revisions/Notes Show PI/PC's Quick Print

3.1 General.

3.1.1

The definitions contained in this chapter shall apply to the terms used in this code/standard.

3.1.2

Where terms are not defined in this chapter or within another chapter, they shall be defined using their ordinarily accepted meanings within the context in which they are used.

3.1.3

Merriam-Webster's Collegiate Dictionary, 11th edition, shall be the source for the ordinarily accepted meaning.

PCs [1]

3.2 NFPA Official Definitions.

3.2.1* Approved.

Acceptable to the authority having jurisdiction.

3.2.2* Authority Having Jurisdiction (AHJ).

An organization, office, or individual responsible for enforcing the requirements of a code or standard, or for approving equipment, materials, an installation, or a procedure.

3.2.3 Labeled.

Equipment or materials to which has been attached a label, symbol, or other identifying mark of an organization that is acceptable to the authority having jurisdiction and concerned with product evaluation, that maintains periodic inspection of production of labeled equipment or materials, and by whose labeling the manufacturer indicates compliance with appropriate standards or performance in a specified manner.

3.2.4* Listed.

Equipment, materials, or services included in a list published by an organization that is acceptable to the authority having jurisdiction and concerned with evaluation of products or services, that maintains periodic inspection of production of listed equipment or materials or periodic evaluation of services, and whose listing states that either the equipment, material, or service meets appropriate designated standards or has been tested and found suitable for a specified purpose.

3.2.5 Shall.

Indicates a mandatory requirement.

3.2.6 Should.

Indicates a recommendation or that which is advised but not required.

3.2.7 Standard.

An NFPA standard, the main text of which contains only mandatory provisions using the word “shall” to indicate requirements and that is in a form suitable for mandatory reference by another standard or code or for adoption into law. Nonmandatory provisions are not to be considered a part of the requirements of a standard and shall be located in an appendix, annex, footnote, informational note, or other means as permitted in the NFPA manuals of style. When used in a generic sense, such as the phrases “standards development process” or “standards development activities,” the term “standards” includes all NFPA standards, including codes, standards, recommended practices, and guides.

3.3* General Definitions.

3.3.1 Acceptable.

Considered by the authority having jurisdiction (AHJ) as adequate for satisfying goals, performance objectives, or performance criteria.

3.3.2 Accessories.

Those items that are attached to the rescue tool, lifting bag, or to a component but are not necessary for the rescue tool, lifting bag, or component to meet the requirements of this standard.

3.3.2.1 Accessory.

An item, or items, that could be attached to a certified product, but are not necessary for the certified product to meet the requirements of this standard.

3.3.3 Alarm Signal.

An audible warning that is identifiable as an indication that an emergency services person (ESP) is in need of assistance.

3.3.4 Alias.

A unique sequence of alphanumeric characters, specifically identifying an RF device assigned by the AHJ.

3.3.5 Angle of Inclination.

The angle incorporated between the beams and a level plane. [**1931,** 2020]

3.3.6 Assembly.

Processes including, but not limited to, sewing, gluing, laminating, tacking, or other means of attaching whereby materials or component parts are put together to form a portion of the compliant product or the complete compliant product.

3.3.7 Base (Bed) Section.

The lowest or widest section of an extension ladder. [**1931,** 2020]

3.3.8 Beam (Side Rail).

The main structural side of the ground ladder. [**1931,** 2020]

3.3.9 Bedded Position.

The position in which the fly section(s) of an extension ladder is fully retracted with the pawls engaged. [**1931,** 2020]

3.3.10 Blackbody.

An object that absorbs all electromagnetic radiation that falls onto it; no radiation passes through the object, and none is reflected.

3.3.11* Bluetooth®.

A wireless technology that allows data communications between devices over short ranges.

3.3.12 Braided Reinforcement.

A hose reinforcement consisting of one or more layers of interlaced spiraled strands of yarn or wire, with a layer of rubber between each braid.

3.3.13* Butt.

The end of the beam that is placed on the ground, or other lower support surface, when ground ladders are in the raised position. [**1931,** 2020]

3.3.14* Butt Spurs (Feet).

That component of ground ladder support that is in contact with the lower support surface to reduce slippage. [**1931,** 2020]

3.3.15 Care.

Procedures for cleaning, decontamination, storage, and service preparation of lifting bags, rescue tools, components, and associated equipment.

3.3.16 Certification Organization.

An independent third-party organization that determines product compliance with the requirements of this standard using product testing and evaluation and that administers a labeling, listing, and follow-up program.

3.3.17 Certification/Certified.

A system whereby a certification organization determines that a manufacturer has demonstrated the ability to produce a product that complies with the requirements of this standard, authorizes the manufacturer to use a label on listed products that comply with the requirements of this standard, and establishes a follow-up program conducted by the certification organization as a check on the methods the manufacturer uses to determine continued compliance of labeled and listed products with the requirements of this standard.

3.3.18 Channel.

An assigned operation range of frequencies; or a user-selectable frequency pair used for radio communications.

3.3.19* Coating.

A protective material impregnated, saturated, or coated on the outside reinforcement layer of the hose to provide additional reinforcement or protection for the hose. [**1961,** 2020]

3.3.20 Collapsible Ladder.

See 3.3.50, Folding Ladder.

3.3.21 Combination Ladder.

A ground ladder that is capable of being used both as a stepladder and as a single or extension ladder. [**1931,** 2020]

3.3.22 Combination Tool.

A rescue tool that is capable of at least spreading and cutting.

3.3.23* Compatible Device.

Any electronic device that connects to the RF device or RSM and that participates in the exchange of a signal.

3.3.24 Compliance/Compliant.

Meeting or exceeding all applicable requirements of this standard.

3.3.25 Compliant.

Verified as meeting or exceeding all applicable requirements of this standard.

3.3.26 Compliant Product.

Equipment that is certified to the applicable NFPA standard.

3.3.27 Component.

Any material, part, or subassembly used in the construction of the compliant product.

3.3.27.1 *Lifting Bag Components.*

Components such as a hose and hose assembly, regulator, pressure indicator, safety valve, and a control device.

3.3.27.2* ***Powered Rescue Tool Components.***

Components such as cable assemblies, hose assemblies, power units, hose reels, and remote valve blocks.

3.3.28 Contamination/Contaminated.

The accumulation of products of combustion and other hazardous materials that include carcinogenic, toxic, corrosive, or allergy-causing chemicals, body fluids, infectious microorganisms, or CBRN terrorism agents.

3.3.29* Coupling.

Connectors attached to the rescue tools, hose assemblies, lifting bags, or accessories to allow for the connection and disconnection of components.

3.3.30 Coupling Slippage.

Any permanent movement of the hose out of a coupling bowl, movement of an external coupling collar, or movement of the hose under an external coupling collar.

3.3.31 Cutter.

A rescue tool with at least one movable blade that is used to cut, shear, or sever material.

3.3.32* Decontamination.

The removal of hazardous substances to the extent necessary to prevent occurrences of adverse health and environmental effects.

3.3.33 Delamination.

The separation of the cover or liner from the textile reinforcement.

3.3.34 Designated Length.

The length marked on the ladder. [**1931,** 2020]

3.3.35 Drip.

To run or fall in drops or blobs.

3.3.36 Duty Rating.

The maximum load the ladder is designed to support when it is in use and properly positioned. [**1931,** 2020]

3.3.37 EAB (Emergency Alert Button).

See 3.3.38.

3.3.38 Emergency Alert Button (EAB).

Electronic device button to assist in alerting of an emergency.

3.3.39 Emergency ID.

Unit identification of a radio in an emergency state.

3.3.40 Emergency State/Mode.

State of an RF device after a user has declared an emergency condition, usually characterized by a particular set of behaviors, displays, or audible alerts.

3.3.41 Emissivity.

The ratio of the radiation emitted by a surface to the radiation emitted by a blackbody at the same temperature.

3.3.42 Extension Ladder.

A non-self-supporting ground ladder that consists of two or more sections traveling in guides, brackets, or the equivalent arranged so as to allow length adjustment. [**1931,** 2020]

3.3.43 Failure Mode and Effects Analysis (FMEA).

A risk assessment technique for systematically identifying potential failures in a system or a process.

3.3.44 Fire Department Ground Ladder.

Any portable ladder specifically designed for fire department use in rescue, firefighting operations, or training. [**1931,** 2020]

3.3.45* Fire Hose Appliance.

A piece of hardware (excluding nozzles) generally intended for connection to fire hose to control or convey water.

3.3.46 Fire Hose Couplings.

One set or pair of connection devices attached to a fire hose that allow the hose to be interconnected to additional lengths of hose or adapters and other firefighting appliances.

3.3.47 Fly Section(s).

The upper section(s) of an extension ladder. [**1931,** 2020]

3.3.48 FMEA (Failure Mode and Effects Analysis).

See 3.3.43.

3.3.49 Fold.

A transverse bend (fold) occurring where the hose is lengthwise doubled over on itself, as on a pin rack.

3.3.50 Folding Ladder.

A single-section ladder with rungs that can be folded or moved to allow the beams to be brought into a position touching or nearly touching each other. [**1931,** 2020]

3.3.51 Follow-Up Program.

The sampling, inspections, tests, or other measures conducted by the third-party certification organization on a periodic basis to determine the continued compliance of labeled and listed products that are produced by the manufacturer to the requirements of this standard.

3.3.52* Free Weight.

Test weights that are not controlled from any direction except by the force of gravity.

3.3.53 Halyard.

Rope used on extension ladders for the purpose of raising a fly section(s). [**1931,** 2020]

3.3.54 HATS (Head and Torso Simulator).

See 3.3.59.

SR-56 Hide Legisl

3.3.55 Hazard Zone.

The area where emergency services personnel might be exposed to a hazard or hazardous atmosphere; or a particular substance, device, event, circumstance, or condition that presents a danger, including immediately dangerous to life and health (IDLH) environments.

3.3.56* Hazard Zone Mode.

A mode of operation of the device when in the hazard zone.

Detail SF

PCs [1]

3.3.57* Hazardous (Classified) Location (HazLoc).

A location where fire or explosion hazards might exist due to flammable or combustible material.

3.3.57.1 Intrinsic Safety (IS).

Type of protection where any spark or thermal effect is incapable of causing ignition of a mixture of flammable or combustible material in air under prescribed test conditions.

3.3.57.1.1 Associated Apparatus.

Electrical equipment that contains both intrinsically safe circuits and nonintrinsically safe circuits and is constructed so that the nonintrinsically safe circuits cannot adversely affect the intrinsically safe circuits.

3.3.57.1.2 Intrinsically Safe Apparatus.

Electrical equipment in which all the circuits are intrinsically safe circuits.

3.3.57.1.3 Intrinsically Safe Circuit.

A circuit in which any spark or thermal effect is incapable of causing ignition of a mixture of flammable or combustible material in air under prescribed test conditions.

3.3.57.1.4 Intrinsically Safe System.

An assembly of interconnected intrinsically safe apparatus, associated apparatus, and interconnecting cables, in that those parts of the system that are used in hazardous (classified) locations are intrinsically safe circuits.

3.3.57.2 Nonincendive (NI).

Type of protection applied to electrical equipment such that, in normal operation and in certain specified regular expected occurrences, it is not capable of igniting a surrounding atmosphere of flammable or combustible material.

3.3.57.2.1 Associated Equipment.

Electrical equipment that contains both nonincendive circuits and other than nonincendive circuits and is constructed so that the other than nonincendive circuits cannot adversely affect the nonincendive circuits.

3.3.57.2.2 Maximum External Capacitance, Co.

Maximum value of capacitance in a circuit that can be connected to the connection facilities of associated equipment functioning as a source.

3.3.57.2.3 Maximum External Inductance, Lo.

Maximum value of inductance in a circuit that can be connected to the connection facilities of associated equipment functioning as a source.

3.3.57.2.4 Maximum Input Current, Ii.

Maximum current that can be applied to the connection facilities of nonincendive equipment functioning as a sink.

3.3.57.2.5 Maximum Input Voltage, Ui.

Maximum voltage that can be applied to the connection facilities of nonincendive equipment functioning as a sink.

3.3.57.2.6 Maximum Internal Capacitance, Ci.

Total equivalent internal capacitance that is considered as appearing across the connection facilities of nonincendive equipment functioning as a sink.

3.3.57.2.7 Maximum Internal Inductance, Li.

Total equivalent internal inductance that is considered as appearing at the connection facilities of nonincendive equipment functioning as a sink.

3.3.57.2.8 Maximum Output Current, Io.

Maximum output current in a circuit that can be provided by the connection facilities of associated equipment functioning as a source under normal operation.

3.3.57.2.9 Maximum Output Voltage, Uo.

Maximum output voltage in a circuit that can appear under open-circuit conditions at the connection facilities of associated equipment functioning as a source under normal operation.

PCs [1]

3.3.57.2.10* Nonincendive Circuit.

A circuit, other than nonincendive field wiring, in which any arc or thermal effect produced under normal operating conditions is not capable of igniting a specified flammable or combustible material in air. The circuit is evaluated under prescribed test conditions.

3.3.57.2.11 Nonincendive Equipment.

Equipment having electrical/electronic circuitry that is incapable, under normal operating conditions, of causing ignition of a specified flammable or combustible material in air due to arcing or thermal means.

3.3.57.2.12 Nonincendive System.

An assembly of interconnected nonincendive equipment, associated equipment, and interconnecting cables, in that those parts of the system that are used in hazardous (classified) locations are nonincendive circuits.

3.3.58 Haze.

Light that is scattered as a result of passing through a transparent object.

3.3.59 Head and Torso Simulator (HATS).

A mannequin with built-in ear and mouth simulators that provides a realistic reproduction of the acoustic properties of an average adult human head and torso.

3.3.60 Heads-Up Display.

A method of displaying information within the user's field of view such as the display of a thermal imager or remaining pressure in a self-contained breathing apparatus.

3.3.61 Heat Sensor Label.

A label that changes color at a preset temperature to indicate a specific heat exposure. [**1931,** 2020]

3.3.62 Hose.

3.3.62.1* *Attack Hose.*

Hose designed to be used by trained firefighters and fire brigade members to combat fires beyond the incipient stage. [**1961,** 2020]

3.3.62.2* *Booster Hose.*

A noncollapsible hose used under positive pressure having an elastomeric or thermoplastic tube, a braided or spiraled reinforcement, and an outer protective cover.

3.3.62.3 ***Covered Hose.***

A hose with a jacket covered and lined with a continuous synthetic rubber or plastic. The cover is usually thicker than a coating.

3.3.62.4 ***Fire Hose.***

A flexible conduit used to convey water. [**1961,** 2020]

3.3.62.5* ***Forestry Fire Hose.***

A hose designed to meet specialized requirements for fighting wildland fires. [**1961,** 2020]

3.3.62.6 ***Large-Diameter Hose.***

A hose of 3 ½ in. (90 mm) or larger size. [**1961,** 2020]

3.3.62.7 ***Occupant Use Hose.***

Fire hose designed to be used by the building's occupants to fight incipient fires prior to the arrival of trained firefighters or fire brigade members. [**1961,** 2020]

3.3.62.8* ***Soft Suction Hose.***

See 3.3.62.10, Supply Hose.

3.3.62.9 ***Suction Hose.***

A hose that is designed to prevent collapse under vacuum conditions so that it can be used for drafting water from below the pump (lakes, rivers, wells, etc.).

3.3.62.10* ***Supply Hose.***

Hose designed for the purpose of moving water between a pressurized water source and a pump that is supplying attack lines. [**1961,** 2020]

3.3.63 Hose Line.

One or more lengths of hose coupled together.

3.3.64 Hose Size.

An expression of the internal diameter of the hose.

3.3.65 Icon.

A symbol that represents an option, program, or system status.

SR-80 Hide Legisl

3.3.66 In Service.

Ready for immediate use.

3.3.66.1* ***In Service Hose.***

The status of hose stored in a hose house, on a rack or reel, or on a fire apparatus that is available and ready for immediate use at an incident.

3.3.66.2 ***In Service Ladder.***

The status of a fire department ground ladder that has been inspected, maintained, and tested and currently is in use or is ready for immediate use.

3.3.67 In Storage.

The status of hose not readily available for use because it is not at the scene of an incident and not loaded on a vehicle that can transport it to the scene.

3.3.68 Interoperability.

The capability of components to exchange data or information, or mechanically interface, with other components.

3.3.69 In Use.

The status of hose that has actually been deployed at an incident or during training whether or not water is running through the hose.

3.3.70 Label.

A permanently affixed identifying tag that provides manufacturer- and product-specific part number and specifications.

3.3.71 Ladder.

A device consisting of two beams (side rails) joined at regular intervals by cross pieces called rungs on which a person is supported during climbs for ascending or descending. *(See also 3.3.96, Pompier Ladder.)* [**1931,** 2020]

3.3.72* Leak.

The movement of any water through a hose, coupling, nozzle, or appliance in an area that should not permit water to pass.

3.3.73 Lifting Bag.

A portable inflatable bag used to apply force to move or lift objects.

3.3.74 Logical ID.

A unique sequence of numeric characters identifying an RF device.

3.3.75 Luminance.

A photometric measure of the amount of light that passes through or is emitted from a particular area.

3.3.76 Maintenance.

Procedures that include inspection, repair, removal from service, and record keeping of lifting bags, rescue tools, components, and associated equipment.

3.3.77 Manufacturer.

The entity that directs and controls any of the following: compliant product design, compliant product manufacturing, or compliant product quality assurance; also, the entity that assumes liability for the compliant product or provides the warranty for the compliant product.

3.3.78 Maximum Extended Length.

The total length of the extension ladder when all fly sections are fully extended and all pawls are engaged. [**1931,** 2020]

3.3.79 Melt.

A response to heat by a material resulting in evidence of flowing or dripping.

3.3.80* Mode.

A means of categorizing a collection of features used in a specific operational situation.

3.3.81 Model.

The collective term used to identify a group of elements or items of the same basic design and components from a single manufacturer produced by the same manufacturing and quality assurance procedures that are covered by the same certification.

3.3.82 Multiple Jacket.

A construction consisting of a combination of two separately woven reinforcements (double jacket) or two or more reinforcements interwoven.

3.3.83* Multipurpose Ladder.

A ground ladder capable of being used as either a stepladder or a straight ladder and comprising two telescoping adjustable-length-section assemblies connected via a hinge assembly.

3.3.84* Nonhazard Zone Mode.

A mode of operation of the device, as defined by the AHJ, which has different operational features than the hazard zone mode of operation.

3.3.85 Organization.

The entity that provides the direct management and supervision for emergency services response personnel.

3.3.86 O-Ring Seal.

A mechanical gasket in a continuous loop of elastomer with a round cross-section, designed to be seated in a groove and compressed during assembly between two or more parts, creating a seal or interface.

3.3.87* Out-of-Range.

A condition when the communication between a system and an RF device is lost.

3.3.88 Out of Service.

The condition when a powered rescue tool, lifting bag, or component is not usable due to an unsafe or inoperable condition.

SR-53 Hide Legisl

3.3.89 Passive Electrical Circuitry.

Electrical circuitry that has no integral power source and is energized by a supplemental device.

3.3.90 Pawls.

Devices attached to a fly section(s) to engage ladder rungs near the beams of the section below for the purpose of anchoring the fly section(s); also referred to as “dogs.” [**1931,** 2020]

3.3.91 Perceptual Objective Listening Quality Assessment (POLQA).

An objective test process for speech quality on telecommunications equipment that can be automated.

3.3.92 Permanent Deformation.

That deformation remaining in any part of a ladder or its components after all test loads have been removed from the ladder. [**1931,** 2020]

3.3.93 Pink Noise.

Noise that contains constant energy per octave band.

3.3.94 Pixel Saturation.

Incident energy that causes a sensor to respond at its maximum value.

3.3.95 POLQA (Perceptual Objective Listening Quality Assessment).

See 3.3.91.

3.3.96 Pompier Ladder (Scaling Ladder).

A ladder having a single center beam only with rungs protruding on either side of the beam and with a large hook on top that is used for scaling. [**1931,** 2020]

3.3.97 Portable Radio.

A two-way, portable voice communications device using radio frequencies that is either carried by an individual or worn on the body *(see 3.3.114, RF Device)*.

3.3.98 Power Source Indicator.

A visual signal displayed on a thermal imager that indicates the status of the power supply.

3.3.99 Power Unit.

A rescue tool component consisting of a prime mover and the principal power output device used to power the rescue tool.

3.3.100 Prime Mover.

Part of the power unit component and the energy source that drives the principal power output device of the power unit.

3.3.101 Product.

See 3.3.26, Compliant Product.

3.3.102* Product Label.

A marking provided by the manufacturer for each compliant product containing compliance statements, certification statements, manufacturer, model information, or similar data.

3.3.103 Program.

A comprehensive strategy that addresses safety issues via educational means. [**1035**, 2015]

3.3.104 Programmable Features.

A feature or function that can be enabled or disabled by configuring the RF device or RSM prior to operation.

3.3.105 Proof Test Pressure.

A pressure equal to at least two times the service test pressure. [**1961,** 2020]

3.3.106 Pulley.

A device attached to a ladder section, consisting of a wheel(s) over which a rope or cable runs for the purpose of changing direction while extending or lowering an extension ladder. [**1931,** 2020]

3.3.107 Radio Licensing Authority.

The government authority in a country that issues licenses for use of radio frequencies by authorized agencies and individuals.

3.3.108 Ram.

A powered rescue tool that has a piston or other type extender that generates extending forces or both extending and retracting forces.

3.3.109 Rebuild.

To clean and examine compliant product thoroughly and make needed repairs and replace components as specified by the manufacturer.

3.3.110 Regulator.

A device for regulating a generally variable inlet pressure to as constant as possible outlet pressure.

3.3.111 Remote Speaker Device/Microphone (RSD/RSM).

A device that places the RF device microphone and speaker remotely from the RF device and near the face of the user.

3.3.112* Rescue Tool.

A device that receives power from the power unit component and generates the output forces or energy used to perform one or more of the functions of spreading, lifting, holding, crushing, pulling, or cutting.

3.3.113 Resolution.

Separation or division into constituent or elementary parts as expressed by the number of pixels in the displayed image.

3.3.114* RF Device.

A radio system capable of both transmitting and receiving a modulated radio-frequency (RF) signal that is then converted to an audio or data signal, or both; used to transmit and receive signals.

3.3.115 RF Subscriber Ensemble.

A testable entity that consists of an RF device and an RSM that are connected.

3.3.116 Roof Ladder.

A single ladder equipped with hooks at the top end or the bottom end of the ladder.

3.3.117 RSD/RSM.

See 3.3.111.

3.3.118 Rungs.

The ladder cross pieces on which a person steps while ascending or descending. [**1931,** 2020]

3.3.119 Safety Alert.

The procedure by which a manufacturer notifies users, the marketplace, and distributors of potential safety concerns regarding a product.

3.3.120 Sample.

Equipment or equipment components that are randomly selected from the manufacturer's production line, from the manufacturer's inventory, or from the open market.

3.3.121 Scaling Ladder.

See 3.3.96, Pompier Ladder.

3.3.122 Sensitivity.

The degree of response of a receiver or instrument to an incoming signal or to a change in the incoming signal.

3.3.122.1 ***Low Sensitivity.***

The least thermally sensitive operational mode, used to increase the thermal imager's temperature range.

3.3.123 Sensitivity Mode.

An operational function that relates to the degree to which temperature differences are resolved.

3.3.124 Service Life.

3.3.124.1 ***Service Life.***

Time or exposure event to which a compliant product or component is expected to remain functional.

3.3.124.2 ***Service Life.***

The period that a compliant product can be useful before retirement.

3.3.125 Service Test.

3.3.125.1 ***Service Test.***

Hydrostatic test conducted by users on in-service hose, couplings, nozzles, or appliances to determine suitability for continued service.

3.3.125.2 ***Service Tests.***

Tests performed on a ground ladder to determine if it meets the standard for continued service.

3.3.126 Side Rail.

See 3.3.8, Beam.

3.3.127 Single Jacket.

A construction consisting of one woven jacket.

3.3.128 Single Ladder.

A non-self-supporting ground ladder, nonadjustable in length, consisting of only one section. [**1931,** 2020]

3.3.129 Slow-Operating Valve.

A valve that has a mechanism to prevent movement of the flow-regulating element from the fully closed position to the fully opened position or vice versa in less than 3 seconds. [**1901,** 2016]

3.3.130 Sound Pressure Level (SPL).

The local pressure deviation from the ambient (i.e., average or equilibrium) atmospheric pressure caused by a sound wave.

3.3.131 Specimen.

The item that undergoes testing; the conditioned equipment or equipment component that is tested. Specimens are taken from samples. *(See also 3.3.120, Sample.)*

3.3.132 Spiral Reinforcement.

A hose reinforcement consisting of pairs of layers of yarn spiraled with no interlacing between the individual layers. The layers of yarn in each pair are spirally wound in opposite directions. A layer of rubber separates each pair of spiraled layers.

3.3.133 SPL (Sound Pressure Level).

See 3.3.130.

3.3.134 Spreader.

A rescue tool that has at least one movable arm that opens to move material.

3.3.135 Standard Operating Procedure (SOP).

A written organizational directive that establishes or prescribes specific operational or administrative methods to be followed routinely for the performance of designated operations or actions. [**1521,** 2020]

3.3.136 Staypoles (Tormentors).

Poles attached to each beam of the base section of extension ladders and used to assist in raising the ladder and to help provide stability of the raised ladder. [**1931,** 2020]

3.3.137 Talk Path.

The specific channel, consisting of transmitting and receiving radio frequencies, chosen for field users to communicate on.

3.3.138* Talkgroup.

A communications channel in a trunked system or a P25, *Standard of Requirements (P25 SoR),* conventional system.

3.3.139 Technician.

An individual qualified and authorized by the compliant product manufacturer to provide specified care and maintenance to the product and perform inspection, repair, and testing beyond the level classified as “user repair.”

3.3.140* Telecommunications Industry Association (TIA).

The leading trade association representing the global information and communications technology industry through standards development, policy initiatives, business opportunities, market intelligence, and networking events.

3.3.141 Temperature Measurement Zone.

A transparent green square that aids in aiming a thermal imager for temperature measurements.

3.3.142 Test.

A procedure intended to establish the operational status or performance of a system or component. [**3,** 2021]

3.3.143 Tested.

Verification of compliance with test requirements as specified in this standard.

3.3.144 Thermal Imager (TI).

Special electronic equipment that creates a picture based on the heat produced by a person or object.

3.3.144.1 *Integrated Nonremovable TI.*

A TI that is an integral part of another item or items of protective clothing, protective equipment, or both and that cannot be used independently of the item with which it is integrated.

3.3.144.2 *Integrated Removable TI.*

A TI that is an integral part of another item or items of protective clothing, protective equipment, or both but is also removable so that it can be used independently of the item or items with which it is integrated.

3.3.144.3 ***Stand-Alone TI.***

A TI that is not an integral part of any other item of protective clothing or protective equipment.

3.3.145 TIA (Telecommunications Industry Association).

See 3.3.140.

3.3.146 Tool.

An abbreviated name for powered rescue tool.

3.3.147 Tormentors or Tormentor Poles.

See 3.3.136, Staypoles.

3.3.148* Trunking Signaling Block (TSBK).

A form of signaling that uses P25 digital protocol for ID, emergency, and similar messages.

3.3.149 Ultimate Failure.

Collapse of a ground ladder structure or component thereof. [**1931,** 2020]

3.3.150 User ID.

A unique sequence of numeric characters (i.e., a logical ID) or alphanumeric characters assigned to the RF device as determined by the AHJ.

3.3.151 Visible Damage.

A permanent change in condition that is clearly evident by visual inspection without recourse to optical measuring or observation devices. [**1931,** 2020]

3.3.152 Visual Inspection.

Observation by eye unaided by optical devices, except prescription eyeglasses or lenses. [**1931,** 2020]

3.3.153* Voltage Standing Wave Ratio (VSWR).

A measure of how efficiently radio-frequency power is transmitted from a power source.

3.3.154 VSWR (Voltage Standing Wave Ratio).

See 3.3.153, Voltage Standing Wave Radio (VSWR).

3.3.155* Water Hammer.

The surge of pressure caused when a high-velocity flow of water is abruptly shut off. The pressure exerted by the flowing water against the closed system can be seven or more times that of the static pressure.

3.3.156 White-Hot Polarity.

A display methodology whereby a grayscale image is created based on the fact that the warmest object in the field of view is the whitest object.

3.3.157 Working Length.

The length of a non-self-supporting portable ladder measured along the beams from the base support point of the ladder to the point of bearing at the top.

3.3.158* Zone.

A geographically defined area where communications are transmitted and received; or a collection of channels, talkgroups, or talk paths.

Chapter 4 Thermal Imagers Certification (NFPA 1801)

4.1 Administration.

4.1.1 Scope.

4.1.1.1

Chapters 4 through 8 shall specify the design, performance, testing, and certification requirements for stand-alone and integrated thermal imagers used by fire service personnel during emergency incident operations.

4.1.1.2

Chapters 4 through 8 shall specify requirements for new thermal imagers for the fire service.

4.1.1.2.1*

Chapters 4 through 8 shall also specify the minimum requirements for the design, performance, testing, and certification of thermal imagers certified to an earlier edition of this standard that incorporate parts, components, and/or software to meet this edition of the standard.

4.1.1.3

Chapters 4 through 8 shall not specify requirements for thermal imagers manufactured prior to the effective date of this standard.

4.1.1.4

Chapters 4 through 8 shall not specify requirements for thermal imagers manufactured to any other standards or other requirements.

4.1.1.5*

Any accessories or enhancements built into, attached to, or sold with the thermal imager by the thermal imager manufacturer for later attachment shall be tested with the thermal imager with those accessories and enhancements installed or attached, as specified in 4.4.9.4, to ensure the performance and functions of the thermal imager.

4.1.1.6

Chapters 4 through 8 shall not be construed as addressing all of the safety concerns, if any, associated with the use of this standard by testing facilities. It shall be the responsibility of the persons and organizations that use this standard to establish safety and health practices and to determine the applicability of regulatory limitations prior to use of this standard for designing, manufacturing, and testing.

4.1.1.7

Nothing herein shall restrict any jurisdiction or manufacturer from exceeding these minimum requirements.

4.1.2 Purpose.

4.1.2.1

The purpose of Chapters 4 through 8 shall be to establish minimum requirements for thermal imagers manufactured for fire service use.

4.1.2.2

Controlled laboratory tests used to determine compliance with the performance requirements of Chapters 4 through 8 shall not be deemed as establishing performance levels for all situations, environments, and conditions to which thermal imagers could be exposed.

4.1.2.3

Chapters 4 through 8 shall not be interpreted or used as a detailed manufacturing or purchase specification, but it shall be permitted to be referenced in purchase specifications as minimum requirements.

4.1.3 Application.

4.1.3.1

Chapters 4 through 8 shall apply to all thermal imagers used by fire service personnel during an emergency incident.

4.1.3.2

Chapters 4 through 8 shall apply to the design, performance, manufacturing, testing, and certification of new thermal imagers used by fire service personnel.

4.1.3.2.1

Chapters 4 through 8 shall also apply to the design, performance, testing, and certification of thermal imagers originally certified to the previous edition of Chapters 4 through 8 that incorporate replacement parts, components, and/or software to be certified to this edition of the standard.

4.1.3.3

Chapters 4 through 8 shall not apply to any thermal imager manufactured in accordance with other standards. However, manufacturers shall be permitted to have noncompliant thermal imagers modified to meet the requirements of this standard and become certified as compliant with Chapters 4 through 8.

4.1.3.4

Chapters 4 through 8 shall not apply to accessories and enhancements that could be built into or attached to a certified thermal imager before or after purchase but that are not necessary for the thermal imager to meet the requirements of Chapters 4 through 8. Any accessories or enhancements built into, attached to, or sold with the thermal imager by the thermal imager manufacturer for later attachment shall be tested with the thermal imager with those accessories and enhancements installed or attached, as specified in 4.3.9.4, to ensure the performance and functions of the thermal imager. *(See A.4.1.1.5.)*

4.1.3.5

Chapters 4 through 8 shall not apply to criteria for use of thermal imagers by the fire service.

4.1.4 Units.

In Chapters 4 through 8, values for measurement are followed by an approximate equivalent in parentheses, but only the first stated value shall be regarded as the requirement.

4.2 General.

4.2.1

For the process of certification of thermal imagers as being compliant with NFPA 1930 all such thermal imagers shall meet the requirements of Section 4.2 through Section 4.9.

4.2.2

All certification shall be performed by a certification organization that meets at least the requirements specified in Section 4.3 and that is accredited for personal protective equipment in accordance with ISO/IEC 17065, *Conformity assessment — Requirements for bodies certifying products, processes, and services.* The accreditation shall be issued by an accreditation body operating in accordance with ISO 17011, *Conformity assessment — General requirements for accreditation bodies accrediting conformity assessment bodies*.

4.2.3

Manufacturers shall not claim compliance with portions or segments of the requirements of this standard and shall not use the NFPA name or the name or identification of this standard, NFPA 1930 in any statements about their respective product(s) unless the product(s) is certified as compliant to this standard.

4.2.4

Where thermal imagers are compliant, the product shall be labeled and listed.

4.2.5

Where thermal imagers are compliant, the product shall also have a product label that meets the requirements specified in Section 5.1.

4.2.6

The certification organization's label, symbol, or identifying mark shall be attached to the product label, shall be part of the product label, or shall be immediately adjacent to the product label.

SCR-3 Hide Legisla

4.2.7

The certification organization shall not certify any thermal imager to the 2021 edition of NFPA 1801 on or after the NFPA effective date for this edition of NFPA 1930 (1801).

SCR-3 Hide Legisla

4.2.8

The certification organization shall not permit any manufacturer to label any thermal imager as compliant with the 2021 edition of NFPA 1801 that is certified as compliant with this edition of NFPA 1930 (1801) after the effective date plus 14 months.

SCR-3 Hide Legisla

4.2.9

The certification organization shall require manufacturers to remove all certification labels and product labels indicating compliance with the 2021 edition of NFPA 1801 from all thermal imagers that are under the ownership and control of the manufacturer on the effective date for this edition of NFPA 1930 (1801) plus 14 months, and the certification organization shall verify that this action is taken.

4.3 Certification Program.

4.3.1

The certification organization shall not be owned or controlled by manufacturers or vendors of the product being certified.

4.3.2

The certification organization shall be primarily engaged in certification work and shall not have a monetary interest in the product's ultimate profitability.

4.3.3

The certification organization shall be accredited for personal protective equipment in accordance with ISO/IEC 17065, *Conformity assessment — Requirements for bodies certifying products, processes, and services*. The accreditation shall be issued by an accreditation body operating in accordance with ISO 17011, *Conformity assessment — General requirements for accreditation bodies accrediting conformity assessment bodies.*

4.3.4

The certification organization shall refuse to certify products to Chapters 4 through 8 of this standard that do not comply with all applicable requirements of this standard.

4.3.5

The contractual provisions between the certification organization and the manufacturer shall specify that certification is contingent on compliance with all applicable requirements of this standard.

4.3.5.1

The certification organization shall not offer or confer any conditional, temporary, or partial certifications.

4.3.5.2

Manufacturers shall not be authorized to use any label or reference to the certification organization on products that are not compliant with all applicable requirements of this standard.

4.3.6

The certification organization shall have laboratory facilities and equipment available for conducting proper tests to determine product compliance.

4.3.6.1

The certification organization laboratory facilities shall have a program in place and functioning for calibration of all instruments, and procedures shall be in use to ensure proper control of all testing.

4.3.6.2

The certification organization laboratory facilities shall follow good practice regarding the use of laboratory manuals, form data sheets, documented calibration and calibration routines, performance verification, proficiency testing, and staff qualification and training programs.

4.3.7

The certification organization shall require the manufacturer to establish and maintain a quality assurance program that meets the requirements of Section 4.6.

4.3.7.1

The certification organization shall require the manufacturer to have a product recall system specified in Section 4.9 as part of the manufacturers' quality assurance program.

4.3.7.2

The certification organization shall audit the manufacturer's quality assurance program to ensure that the quality assurance program provides continued product compliance with this standard.

4.3.8

The certification organization and the manufacturer shall evaluate any changes affecting the form, fit, or function of the compliant product to determine its continued certification to this standard.

4.3.8.1

The certification organization and the manufacturer shall evaluate replacement parts, components, software, and upgrade procedures to determine any changes affecting the form, fit, or function of thermal imagers certified to earlier editions of this standard to permit incorporation of replacement parts, components, or software, leading to certification of devices to this edition of the standard.

4.3.8.2

Where a manufacturer has more than one model of thermal imager, all certified to this standard, the certifying organization and the manufacturer shall evaluate replacement parts, components, software, and upgrade procedures to determine the continued certification when modifying a fielded thermal imager with replacement parts, components, or software in one previously certified model to become another previously certified model.

4.3.9

The certification organization shall have a follow-up inspection program of the manufacturer's facilities of the compliant product with at least two random and unannounced visits per 12-month period to verify the product's continued compliance.

4.3.9.1

As part of the follow-up inspection program, the certification organization shall select sample compliant product at random from the manufacturer's production line, from the manufacturer's in-house stock, or from the open market.

4.3.9.2

Sample product shall be evaluated by the certification organization to verify the product's continued compliance in order to ensure that the materials, components, and manufacturing quality assurance systems are consistent with the materials, components, and manufacturing quality assurance that were inspected and tested by the certification organization during initial certification and recertification.

4.3.9.3

The certification organization shall be permitted to conduct specific testing to verify the product's continued compliance.

4.3.9.4

For products, components, and materials where prior testing, judgment, and experience of the certification organization have shown results to be in jeopardy of not complying with this standard, the certification organization shall conduct more frequent testing of sample product, components, and materials acquired in accordance with 4.3.9.1 against the applicable requirements of this standard.

4.3.10

The certification organization shall have in place a series of procedures, as specified in Section 4.7, that address reports of situations in which a compliant product is subsequently found to be hazardous.

4.3.11

The certification organization's operating procedures shall provide a mechanism for the manufacturer to appeal decisions. The procedures shall include the presentation of information from both sides of a controversy to a designated appeals panel.

4.3.12

The certification organization shall be in a position to use legal means to protect the integrity of its name and label. The name and label shall be registered and legally defended.

4.4 Inspection and Testing.

4.4.1

For both initial certification and recertification of compliant products, the certification organization shall conduct both inspection and testing as specified in this section.

4.4.2

All inspections, evaluations, conditioning, and testing for certification or for recertification shall be conducted by a certification organization's testing laboratory that is accredited in accordance with the requirements of ISO 17025, *General requirements for the competence of testing and calibration laboratories*.

4.4.2.1

The certification organization's testing laboratory's scope of accreditation to ISO 17025, *General requirements for the competence of testing and calibration laboratories*, shall encompass testing of personal protective equipment.

4.4.2.2

The accreditation of a certification organization's testing laboratory shall be issued by an accreditation body operating in accordance with ISO 17011, *Conformity assessment — General requirements for accreditation bodies accrediting conformity assessment bodies*.

4.4.3

A certification organization shall be permitted to utilize conditioning and testing results conducted by a product or component manufacturer for certification or recertification, provided the manufacturer's testing laboratory meets the requirements specified in 4.4.3.1 through 4.4.3.5.

4.4.3.1

The manufacturer's testing laboratory shall be accredited in accordance with the requirements of ISO 17025, *General requirements for the competence of testing and calibration laboratories*.

4.4.3.2

The manufacturer's testing laboratory's scope of accreditation to ISO 17025, *General requirements for the competence of testing and calibration laboratories*, shall encompass testing of personal protective equipment.

4.4.3.3

The accreditation of a manufacturer's testing laboratory shall be issued by an accreditation body operating in accordance with ISO 17011, *Conformity assessment — General requirements for accreditation bodies accrediting conformity assessment bodies*.

4.4.3.4

The certification organization shall approve the manufacturer's testing laboratory.

4.4.3.5

The certification organization shall determine the level of supervision and witnessing of the conditioning and testing for certification or recertification conducted at the manufacturer's testing laboratory.

4.4.4

Sampling levels for testing and inspection shall be established by the certification organization and the manufacturer to ensure a reasonable and acceptable reliability at a reasonable and acceptable confidence level that products certified to this standard are compliant, unless such sampling levels are specified herein.

4.4.5

Inspection and evaluation by the certification organization shall include a review of all product labels to ensure that all required label attachments, compliance statements, certification statements, and other product information are at least as specified for thermal imagers in Section 5.1.

4.4.6

Inspection and evaluation by the certification organization shall include an evaluation of any symbols and pictorial graphic representations used on product labels or in user information, as permitted in 5.1.5, to ensure that the symbols are clearly explained in the product's user information package.

4.4.7

Inspection and evaluation by the certification organization shall include a review of the user information required by Section 5.2 to ensure that the information has been developed and is available.

4.4.8

Inspection and evaluation by the certification organization for determining compliance with the design requirements specified in Chapter 6 shall be performed on whole or complete products.

4.4.9

Testing to determine compliance of the thermal imager and the components that are necessary for the proper operation of the thermal imager with the performance requirements specified in Chapter 7 shall be conducted by the certification organization in accordance with the specified testing requirements of Chapter 8. The order of testing shall be conducted as specified in Table 4.4.9(a) for stand-alone thermal imagers and Table 4.4.9(b) for thermal imagers integrated into other NFPA-compliant devices.

Table 4.4.9(a) Test Matrix for Stand-Alone and Removable Integrated Thermal Imagers

Test Order	Specimens 1–3	Specimens 4–6	Specimens 7–9	Specimens 10–12	Specimens 13–15	Specimens 16–18
1	Image Recognition Test Section 8.1 Specimens 1–3	Image Recognition Test Section 8.1 Specimens 4–6	Corrosion Test Section 8.4 Specimens 7–9	Heat Resistance Test Section 8.6 Specimens 10–12	Image Recognition Test Section 8.1 Specimens 13–15	Image Recognition Test Section 8.1 Specimens 16–18
2	Field of View Measurement Section 8.11 Specimens 1–3	Cable Pullout Test Section 8.9 Specimens 4–6	Product Label Durability Test Section 8.8 Specimens 7–9	Product Label Durability Test Section 8.8 Specimens 10–12	Vibration Test Section 8.2 Specimens 13–15	Durability Test Section 8.13 Specimens 16–18
3	Effective Temperature Range Test Section 8.10 Specimens 1–3	Impact Acceleration Resistance Test — Ambient Section 8.3 Specimen 4			Image Recognition Test Section 8.1 Specimens 13–15	Image Recognition Test Section 8.1 Specimens 16–18
4	Thermal Sensitivity Test Section 8.12 Specimens 1–3	Impact Acceleration Resistance Test — Cold Section 8.3 Specimen 5				Product Label Durability Test Section 8.8 Specimens 16–18
5	Heat and Flame Test Section 8.7 Specimens 1–3	Impact Acceleration Resistance Test — Elevated Section 8.3 Specimen 6				
6		Image Recognition Test Section 8.1 Specimens 4–6				

Table 4.4.9(b) Test Matrix for Nonremovable Integrated Thermal Imagers

Test Order	Specimens 1–3	Specimens 4–6	Specimens 7–9	Specimens 10–12	Specimens 13–15
1	Image Recognition Test Section 8.1 Specimens 1–3	Cable Pullout Test Section 8.9 Specimens 4–6	Heat Resistance Test Section 8.6 Specimens 7–9	Image Recognition Test Section 8.1 Specimens 10–12	Image Recognition Test Section 8.1 Specimens 13–15
2	Field of View Measurement Section 8.11 Specimens 1–3	Corrosion Test Section 8.4 Specimens 4–6	Product Label Durability Test Section 8.8 Specimens 7–9	Vibration Test Section 8.2 Specimens 10–12	Durability Test Section 8.13 Specimens 13–15
3	Effective Temperature Range Test Section 8.10 Specimens 1–3	Product Label Durability Test Section 8.8 Specimens 4–6		Image Recognition Test Section 8.1 Specimens 10–12	Image Recognition Test Section 8.1 Specimens 13–15
4	Thermal Sensitivity Test Section 8.12 Specimens 1–3				Product Label Durability Test Section 8.8 Specimens 13–15
5	Heat and Flame Test Section 8.7 Specimens 1–3				

4.4.9.1

Testing shall be performed on new thermal imager products.

4.4.9.2

Testing shall be performed on specimens representative of materials and components used in the actual construction of the compliant product.

4.4.9.3

The certification organization also shall be permitted to use sample materials cut from a representative product.

4.4.9.4

Where any accessories, enhancements, or both are built into, attached to, or detachable from the thermal imager, including, but not limited to, methods of attachment to the operator, the certification organization shall inspect and evaluate the thermal imager as specified in Chapter 6 and shall test the thermal imager as specified in Chapter 8. The thermal imager shall meet all the performance requirements specified in Chapter 7 with those accessories and enhancements installed or attached, including, but not limited to, methods of attachment to the operator, to ensure that the performance and functions of the thermal imager are not reduced or otherwise negatively affected.

4.4.9.5

Where the thermal imager is designed to be an accessory, enhancement, or both and built into, attached to, or detachable from another NFPA certified device, the certification organization shall inspect and evaluate the thermal imager as specified in Chapter 6 and shall test the thermal imager as specified in Chapter 8. Where applicable, the thermal imager shall meet all the performance requirements specified in Chapter 7 installed or attached to a manufacturer's specified device(s), to ensure that the performance and functions of the thermal imager are not reduced or otherwise negatively affected.

4.4.10

The certification organization shall accept from the manufacturer, for evaluation and testing for certification, only product or product components that are the same in every respect as the actual final product or product component.

4.4.11

The certification organization shall not allow any modifications, pretreatment, conditioning, or other such special processes of the product or any product component prior to the product’s submission for evaluation and testing by the certification organization. Manufacturers shall be permitted to refocus camera samples prior to conducting testing.

4.4.12

The certification organization shall not allow the substitution, repair, or modification, other than as specifically permitted herein, of any product or any product component during testing.

4.4.13

The certification organization shall not allow test specimens that have been conditioned and tested for one method to be reconditioned and tested for another test method unless specifically permitted in the test method.

4.4.14

Material changes in the color, form, fit, or function of a compliant product shall necessitate new inspection and testing to verify compliance to all applicable requirements of this standard that the certification organization determines can be affected by such change. This recertification shall be conducted before labeling the modified product as being compliant with this standard.

4.4.15

The manufacturer shall maintain all design, performance, inspection, and test data from the certification organization used in the certification of the manufacturer’s compliant product. The manufacturer shall provide such data, upon request, to the purchaser or authority having jurisdiction (AHJ).

4.4.16 Accessory Certification.

4.4.16.1

Where a thermal imager submitted for certification to this standard is also submitted with an accessory that is built into, attached to, or sold for later attachment to the thermal imager, and an NFPA standard exists for the product performance associated with the accessory, the accessory shall be certified to that NFPA standard.

4.4.16.2

In all cases, such accessories shall not degrade the performance of the thermal imager.

4.4.16.3

Where a thermal imager is submitted as an accessory that is built into, attached to, or sold for later attachment to a product, and an NFPA Project on Fire and Emergency Services Protective Clothing and Equipment standard exists for the product and the product is certified to that NFPA standard, the thermal imager shall be certified to NFPA 1930

4.4.16.4

In all cases, the thermal imager shall not degrade the performance of the product.

4.5 Annual Verification of Product Compliance.

4.5.1

All thermal imagers that are certified as compliant with this standard shall undergo annual verification.

4.5.1.1

Annual verification shall include the following:

(1) Inspection and evaluation to all design requirements as required by Chapters 4 through 8 on all manufacturer models and components

(2) Testing to all performance requirements as required by Chapters 4 through 8 on all manufacturer models and components within the following protocol:

  (a) Where a test method incorporates testing both before and after preconditioning and the test generates quantitative results, annual verification testing shall be limited to the conditioning that yielded the worst-case test result during the initial certification for the model or component.

  (b) Where a test method requires testing of three specimens, a minimum of one specimen shall be tested for annual verification.

  (c) Where a test method requires testing of five or more specimens, a minimum of two specimens shall be tested for annual verification.

  (d) When testing in accordance with Section 8.13, Durability Test, the specimen shall be subjected to Procedure 2, Procedure 3, and then Procedure 1, with the postexposure image recognition reading being taken only after Procedure 1.

4.5.2

Samples of manufacturer models and components for annual verification acquired from the manufacturer or a component supplier during random and unannounced visits as part of the follow-up inspection program in accordance with 4.3.9 shall be permitted to be used toward annual verification.

4.5.3

The manufacturer shall maintain all design and performance inspection and test data from the certification organization used in the annual verification of manufacturer models and components. The manufacturer shall provide such data, upon request, to the purchaser or AHJ.

4.6 Manufacturers' Quality Assurance Program.

4.6.1

The manufacturer shall provide and operate a quality assurance program that meets the requirements of this section and that includes a product recall system as specified in 4.3.7.1 and Section 4.9.

4.6.2

The operation of the quality assurance program shall evaluate and test compliant product production to the requirements of this standard to ensure that production remains in compliance.

4.6.3

The manufacturer shall be registered to ISO 9001, *Quality management systems — Requirements.*

4.6.3.1

Registration to the requirements of ISO 9001, *Quality management systems — Requirements,* shall be conducted by a registrar that is accredited for personal protective equipment in accordance with ISO/IEC 17021-1, *Conformity assessment — Requirements for bodies providing audit and certification of management systems*.

4.6.3.2

The scope of the ISO registration shall include at least the design and manufacturing systems management for the personal protective equipment being certified.

4.6.3.3

The registrar shall affix the accreditation mark on the ISO registration certificate.

4.6.4

Any entity that meets the definition of *manufacturer* specified in 3.3.77 and therefore is considered to be the “manufacturer” but does not manufacture or assemble the compliant product shall meet the requirements specified in Section 4.6.

4.6.5

Where the manufacturer uses subcontractors in the construction or assembly of the compliant product, the locations and names of all subcontractor facilities shall be documented, and the documentation shall be provided to the manufacturer’s ISO registrar and the certification organization.

4.7 Hazards Involving Compliant Product.

4.7.1

The certification organization shall establish procedures to be followed where situations are reported in which a compliant product is subsequently found to be hazardous. These procedures shall comply with the provisions of ISO Guide 27, *Guidelines for corrective action to be taken by a certification body in the event of misuse of its mark of conformity*, and as modified in Chapters 4 through 8 of this standard.

4.7.2

Where a report of a hazard involved with a compliant product is received by the certification organization, the validity of the report shall be investigated.

4.7.3

With respect to a compliant product, a hazard shall be a condition, or create a situation, that results in exposing life, limb, or property to a dangerous or imminently dangerous condition.

4.7.4

Where a specific hazard is identified, the determination of the appropriate action for the certification organization and the manufacturer to undertake shall take into consideration the severity of the hazard and its consequences to the safety and health of users.

4.7.5

Where it is established that a hazard is involved with a compliant product, the certification organization shall determine the scope of the hazard, including products, model numbers, serial numbers, factory production facilities, production runs, and quantities involved.

4.7.6

The certification organization’s investigation shall include, but not be limited to, the extent and scope of the problem as it might apply to other compliant product or compliant product components manufactured by other manufacturers or certified by other certification organizations.

4.7.7

The certification organization shall also investigate reports of a hazard where compliant product is gaining widespread use in applications not foreseen when the standard was written, such applications in turn being ones for which the product was not certified, and no specific scope of application has been provided in the standard, and no limiting scope of application was provided by the manufacturer in written material accompanying the compliant product at the point of sale.

4.7.8

The certification organization shall require the manufacturer of the compliant product or the manufacturer of the compliant product component if applicable, to assist the certification organization in the investigation and to conduct its own investigation as specified in Section 4.8.

4.7.9

Where the facts indicating a need for corrective action are conclusive and the certification organization’s appeal procedures referenced in 4.3.12 have been followed, the certification organization shall initiate corrective action immediately, provided there is a manufacturer to be held responsible for such action.

4.7.10

Where the facts are conclusive and corrective action is indicated, but there is no manufacturer to be held responsible, such as when the manufacturer is out of business or the manufacturer is bankrupt, the certification organization shall immediately notify relevant governmental and regulatory agencies and issue a notice to the user community about the hazard.

4.7.11

Where the facts are conclusive and corrective action is indicated, the certification organization shall take one or more of the following corrective actions:

(1) Parties authorized and responsible for issuing a safety alert shall be notified when, in the opinion of the certification organization, such a safety alert is necessary to inform the users.

(2) Parties authorized and responsible for issuing a product recall shall be notified when, in the opinion of the certification organization, such a recall is necessary to protect the users.

(3) The mark of certification shall be removed from the product.

(4) Where a hazardous condition exists and it is not practical to implement the corrective actions in 4.7.11(1), 4.7.11(2), or 4.7.11(3) or where the responsible parties refuse to take corrective action, the certification organization shall notify relevant governmental and regulatory agencies and issue a notice to the user community about the hazard.

4.7.12

The certification organization shall provide a report to the organization or individual identifying the reported hazardous condition and notify that organization or individual of the corrective action indicated or that no corrective action is indicated.

4.7.13

Where a change to an NFPA standard(s) is felt to be necessary, the certification organization shall also provide a copy of the report and indicated corrective actions to the NFPA and shall also submit either public input for a proposed change to the next revision of the applicable standard or a proposed Temporary Interim Amendment (TIA) to the current edition of the applicable standard.

4.8 Manufacturers' Investigation of Complaints and Returns.

4.8.1

Manufacturers shall provide corrective action in accordance with ISO 9001, *Quality management systems — Requirements*, for investigating written complaints and returned products.

4.8.2

Manufacturers' records of returns and complaints related to safety issues shall be retained for at least 5 years.

4.8.3

Where the manufacturer discovers, during the review of specific returns or complaints, that a compliant product or compliant product component can constitute a potential safety risk to end users and is possibly subject to a safety alert or product recall, the manufacturer shall immediately contact the certification organization and provide all information about its review to assist the certification organization with the investigation.

4.9 Manufacturers' Safety Alert and Product Recall Systems.

4.9.1

Manufacturers shall establish a written safety alert system and a written product recall system that describes the procedures to be used in the event that they decide or are directed by the certification organization to either issue a safety alert or conduct a product recall.

4.9.2

The manufacturers' safety alert and product recall systems shall provide the following:

(1) The establishment of a coordinator and responsibilities by the manufacturer for the handling of safety alerts and product recalls

(2) A method of notifying all dealers, distributors, purchasers, users, and the NFPA about the safety alert or product recall that can be initiated within 1 week following the manufacturer's decision to issue a safety alert or to conduct a product recall or after the manufacturer has been directed by the certification organization to issue a safety alert or conduct a product recall

(3) Techniques for communicating accurately and understandably the nature of the safety alert or product recall and, in particular, the specific hazard or safety issue found to exist

(4) Procedures for removing product that is recalled and for documenting the effectiveness of the product recall

(5) A plan for repairing or replacing product or for compensating purchasers for returned product

5.1 Product Label Requirements.

5.1.1

Each compliant thermal imager shall have a product label permanently and conspicuously attached to the complete assembled product.

5.1.2

Multiple label pieces shall be permitted to show all statements and information required to be on the product label.

5.1.2.1

All label pieces that the product label comprises shall be located adjacent to each other.

5.1.3

The certification organization's label, symbol, or identifying mark shall be attached to the product label or be part of the product label and shall be placed in a conspicuous location.

5.1.3.1

All letters shall be at least 1.5 mm (1⁄16 in.) in height, and the label, symbol, or identifying mark shall be at least 6 mm (¼ in.) in height.

5.1.3.1.1

The label, symbol, or identifying mark shall be placed above, below, or to either side of the text.

5.1.3.2

The font Arial in capital letters shall be used for all label lettering.

5.1.4

All worded portions of the required product label shall be at least in English.

5.1.5

Symbols and other pictorial representations shall be permitted to be used to supplement worded statements on the product label(s).

SCR-4 Hide Legisla

5.1.6

Thermal imagers originally certified to the previous edition of NFPA 1801 that have been upgraded to meet this edition shall have the following statement legibly printed:

UPGRADED TO NFPA 1930 (1801), [*insert edition year*] ED.

5.1.6.1

All letters shall be at least 1.5 mm (1⁄16 in.) in height.

5.1.6.2

The label shall not be restricted to one line.

5.1.6.3

The original NFPA required labeling shall not be removed or covered by the upgrade label.

SCR-4 Hide Legisla

5.1.7

For both stand-alone and integrated thermal imagers, the following compliance statement shall be legibly printed on the product label:

CERTIFIED MODEL NFPA 1930 (1801), [*insert edition year*] ED.

DO NOT REMOVE THIS LABEL!

5.1.8

Each thermal imager shall be permanently marked with a serial number and the year and month of manufacture.

5.1.8.1

The year and month of manufacture shall be separate from the serial number and shall be in MM/YYYY format.

5.1.9

All rechargeable power sources provided by the thermal imager manufacturer shall be marked with a serial number and the year and month of manufacture.

5.1.9.1

The year and month of manufacture shall be separate from the serial number and shall be in MM/YYYY format.

5.2 User Information.

5.2.1

The manufacturer shall provide with each product at least the informational material and user instructions specified in Section 5.2.

5.2.2

At the time of purchase, the manufacturer shall provide to the purchaser an information sheet with each product that documents at least the following:

(1) Date of manufacture

(2) Model number

(3) Serial number

(4) Lot number, if applicable

5.2.3*

Information and materials regarding preoperational use shall be provided on at least the following areas:

(1) Safety considerations

(2) Preuse checks

(3) Limitations of use

(4) Power source requirements, type, and brand

(5) Estimated operation time on fully charged power source in each available mode

(6) Estimated operational time associated with each of the four segments on the power source status indicator

(7) Low-power source signals and power supply replacement, where applicable

(8) Charging and recharging procedures

(9) Marking recommendations and restrictions

(10) Warranty information

(11) Recommended storage practices

(12) Mounting on/in vehicles or fire apparatus

(13) Explanation and identification of the features and functions of TI BASIC/TI BASIC PLUS

(14) Symbols and functions with associated temperature references in available operating modes

(15) If equipped with a temperature bar, adequate description of the use of the temperature bar

(16) If equipped with a numeric temperature indicator, adequate description of the use of the numeric temperature indicator

(17) If equipped with colorization, adequate description of the temperature thresholds for colorization

5.2.4

Information and operational materials regarding periodic inspections shall be provided on at least inspection frequency and details.

5.2.5

Information and operational materials regarding proper operational use shall be provided as specified by the manufacturer and in accordance with the minimum requirements set forth by NFPA 1408.

5.2.6

Information and operational materials regarding periodic maintenance and cleaning shall be provided on at least the following areas:

(1) Cleaning instructions and precautions

(2) Disinfecting procedures

(3) Maintenance frequency and details

(4) Guidelines for service and repair

PCs [1]

5.2.7

Information and operational materials regarding service life, replacement, and retirement considerations for thermal imagers and components shall be provided.

SR-15 Hide Legisla

5.2.8

Equipment certified for use in hazardous locations shall be provided with at least the following information in user instructions or training materials:

(1) For thermal imagers and thermal imager accessories that are certified as nonincendive equipment, electrically interconnected types, the following:

(a) Identification as nonincendive equipment, electrically interconnected types

(b) Indication of the ability to interconnect with any other thermal imager and thermal imager accessories also certified and identified as nonincendive equipment, electrically interconnected types, in accordance with this standard

(2) For thermal imagers that are part of a nonincendive system, indication of the thermal imager accessories that comprise the nonincendive system in accordance with this standard

(3) For thermal imagers that are part of an intrinsically safe system, indication of the thermal imager accessories that comprise the intrinsically safe system in accordance with this standard

Global SC

Chapter 6 Thermal Imagers Design Requirements (NFPA 1801)

Save As Word Show Revisions/Notes Show PI/PC's Quick Print

6.1 General Design Requirements.

6.1.1

All thermal imagers shall have at least the applicable design requirements specified in this chapter when inspected and evaluated by the certification organization as specified in Section 4.4.

6.1.2*

All thermal imagers shall be capable of continuously operating for a minimum of 120 minutes in TI BASIC mode at 22°C ± 3°C (72°F ± 5°F) and without the power source being changed or recharged.

6.1.2.1

The continuous operating time shall be measured with all permissible TI BASIC mode current-drawing functions listed under Section 6.4, as well as all manufacturer background systems activated.

6.1.3

All power sources consisting of battery cells and battery packs shall be certified by a nationally recognized testing laboratory (NRTL) to the regulations outlined in UL 1642, *Lithium Batteries*; UL 2054, *Household and Commercial Batteries*; or IEC 62133, *Safety requirements for portable sealed secondary cells, and for batteries made from them, for use in portable applications.*

6.1.4

When powered on, all thermal imagers shall continuously detect and display as an image that portion of the electromagnetic spectrum occurring in the 8.0–14.0 micron range and shall include all components necessary for the intended proper operation of the thermal imager.

6.1.5

The thermal imager shall incorporate a sensor engine consisting of an infrared sensor with at least 76,800 imaging pixels.

PCs [1] SR-1 Hide Legisla

6.1.6

Thermal image video output shall be displayed on a display device consisting of at least 76,800 display pixels, where each display pixel can render all colors required in the standard.

6.1.6.1

Display devices consisting of more than 76,800 display pixels shall use at least 76,800 display pixels for the thermal image video output.

6.1.7 Minimum Video Refresh Rate.

All thermal imagers shall have a minimum video refresh rate of 25 frames per second in both the detector and the display.

6.1.8

All operational selection devices, including but not limited to switches, card readers, and keys, shall be rated for not less than 50,000 cycles.

6.1.9

All operational selection devices shall be designed to prevent unintentional activation, deactivation, impact damage, and change of operation.

6.1.10

All operational selection devices shall be capable of being switched by a gloved hand. The gloves used for this function test shall be constructed of American cowhide and include a polytetrafluoroethylene (PTFE) moisture barrier, shall be properly sized according to the manufacturer and in size large, and shall be certified as compliant with the structural firefighting glove requirements of NFPA 1970.

6.1.11

All thermal imagers shall be provided with a method of attaching the thermal imager to the user, and the method of attachment shall not degrade the function or performance of the thermal imager.

6.1.11.1

Methods of attachment shall not obstruct the operator's view of the display or the camera's field of view when held in the viewing position as stated by the manufacturer.

6.2 Power Button.

6.2.1

The thermal imager shall have a power–on/off button that cycles the thermal imager's power. The power–on/off button shall be located in an easily accessible area of the thermal imager.

6.2.2

The power–on/off button shall be green in color. No other button(s) on the outside of the thermal imager shall be green in color.

6.2.3

The power−on/off button shall only turn the thermal imager "on," turn the thermal imager "off," and revert the thermal imager to the TI BASIC operational format from TI BASIC PLUS operational format.

6.2.4

When the thermal imager is off, the activation of the power–on/off button shall always power up the thermal imager in the TI BASIC operational format.

6.2.5

Where the power–on/off button is used to power up the thermal imager, the power-on process shall require the power button to be pressed and held for no more than 1 second.

6.2.5.1

Automatic activation of the power-up process shall be permitted.

6.2.5.2

Both the power–on/off button activation and the automatic activation shall present a useful thermal image with all the icons required in the TI BASIC operational format on the display in 30 seconds or less.

6.2.6

The power–on/off button shall be protected from accidental change of operation and impact damage.

6.3 Failure Mode and Effects Analysis (FMEA) for Thermal Imagers.

6.3.1*

A FMEA shall be applied throughout the development process.

6.3.2

The FMEA shall address thermal imager systems and shall identify and prioritize those critical failures that could have a serious effect on the safety and reliability of a thermal imager in the anticipated operating environments.

6.3.3

The FMEA shall tabulate potential failure modes and their effects on the performance of a thermal imager. The failure mode shall describe how the system might fail.

6.3.4*

The thermal imager manufacturer shall use FMEA to address the reduction of risk of random and systematic failures of thermal imagers by using as low as reasonably practical (ALARP) region activities, shown in Figure 6.3.4. The thermal imager manufacturer shall include the risk priority number (RPN) corresponding to the upper limit of the ALARP region in the FMEA report.

Figure 6.3.4 ALARP Region Activities.

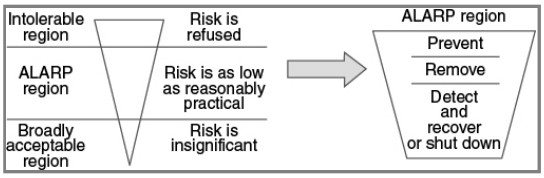

6.3.5

Where a thermal imager system RPN as determined by the manufacturer is above the upper limit of the ALARP region as determined by the manufacturer, one or more of the practices specified in 6.3.5.1 shall be permitted.

6.3.5.1

Verification of the manufacturers' design and testing practices shall include documentation of at least temperature, vibration, and wetness exposure data; hours of operation; and management of change information.

6.3.6

The FMEA report shall be provided to the certification organization.

6.4 TI BASIC Operational Format.

6.4.1

All thermal imagers shall have at least the TI BASIC operational format and shall be permitted to also have a TI BASIC PLUS operational format as specified in Section 6.5.

6.4.2*

When the thermal imager is initially powered on or restarted from the TI BASIC PLUS operational format, the thermal imager shall revert back to the TI BASIC operational format.

6.4.3

TI BASIC operational format functions shall include the following:

(1) Grayscale imagery with white-hot polarity

(2) Power source status indicator

(3) Internal electronics overheat indicator

(4) Thermal imager "on" indicator

6.4.4

In addition to the requirements specified in 6.4.3, the TI BASIC operational format shall be permitted to also include only the following:

(1) Heat-indicating color and, if so equipped with heat-indicating color, a heat color reference bar

(2) Audio, video, and data recording

(3) Audio, video, and data transmission

6.5 TI BASIC PLUS Operational Format.

6.5.1

TI BASIC PLUS operational format shall have at least the TI BASIC operational format functions specified in 6.4.3, and any or all of the TI BASIC operational format functions listed in 6.4.4 shall also be permitted.

6.5.2*

TI BASIC PLUS operational format shall be permitted to have additional functions, enhancements, and innovations beyond TI BASIC, provided by the manufacturer, that require additional or specialized instruction or training in addition to the TI BASIC operational format training.

6.5.3

TI BASIC PLUS functions shall not result in failure to provide TI BASIC functions specified in 6.4.3, in whole or in part.

6.5.4

TI BASIC PLUS shall switch to TI BASIC by either cycling the thermal imager's power by pushing the green power–on/off button, or by pushing the green power–on/off button once for no more than 1 second while the thermal imager is on.

6.5.5

TI BASIC PLUS shall be designed to limit access and shall have an alternative method of selecting the operational format other than that of TI BASIC.

6.6 Thermal Imager Viewing Area.

6.6.1

The thermal imager shall have a viewing area that contains operational information for the thermal imager user.

6.6.2

The viewing area shall consist of three vertical sections and shall include a maximum distance of 25 mm (1 in.) directly above, below, and on the sides of the display. The region consisting of a maximum distance of 25 mm (1 in.) directly above, below, and on the sides of the display shall be part of the viewing area.

6.6.3

Each of the three vertical sections shall be reserved to contain specific thermal imager additional information, alarm and operational indicators, and temperature sensing indicators as shown in Figure 6.6.3 and specified in 6.6.3.1 through 6.6.3.3.

Figure 6.6.3 Thermal Imager Viewing Area and Icon Layout.

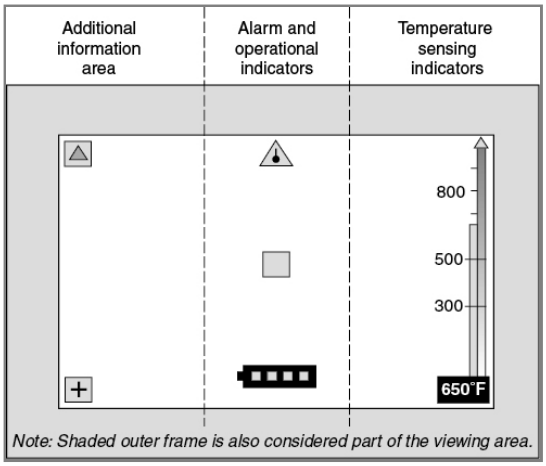

6.6.3.1 Additional Information Area, Left Vertical Section.

The left vertical section shall be reserved for additional information in both the TI BASIC and TI BASIC PLUS operational formats using standard icons/symbols and locations.

6.6.3.1.1

In the TI BASIC operational format, the left vertical section shall include only the following:

(1) Low sensitivity mode indicator

(2) Audio, video, or data recording icon, if so equipped and in operation

PCs [1]

6.6.3.1.2

In the TI BASIC PLUS operational format, the left vertical section shall also include the following:

(1) TI BASIC PLUS activation

(2) Activation and status of optional TI BASIC PLUS features and functions, if so equipped and in operation

SR-2 Hide Legisla

6.6.3.1.3

Standard icons or symbols in the additional information area that do not overlay the thermal image shall be in contrast to their background.

6.6.3.2 Alarm and Operational Indicator Area, Center Vertical Section.

The center column of the display plane shall be reserved for the alarm and operational indicators and shall include the following:

(1) Power source status indicator

(2) Temperature measurement zone, if so equipped

(3) Internal electronics overheat indicator

PCs [1]

6.6.3.3 Temperature Sensing Indicators Area, Right Vertical Section.

The right vertical section of the viewing area shall be reserved for temperature sensing indicators and heat color reference bar(s).

SR-3 Hide Legisla

6.6.3.3.1

Temperature-sensing indicators and heat color reference bar(s) that do not overlay the thermal image shall be in contrast to their background.

6.6.4 Icon and Symbol Design.

The icons for the TI BASIC and TI BASIC PLUS functions shall be as shown in Figure 6.6.4 and as specified in 6.6.4.1 through 6.6.4.9.

Figure 6.6.4 Icon Designs and Descriptions.

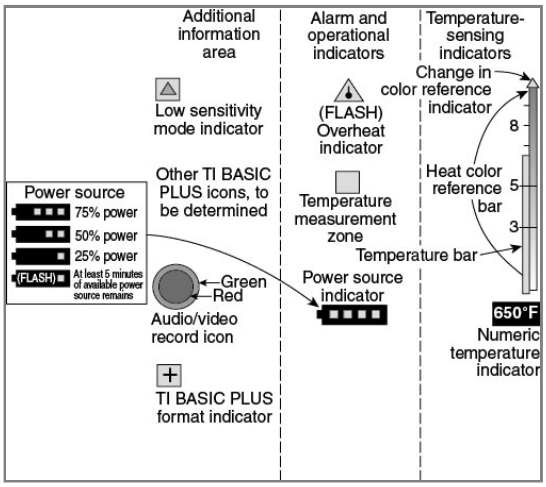

6.6.4.1 Temperature Sensing Indicators.

6.6.4.1.1

Where the thermal imager is equipped with spot temperature measurement, it shall have a visual temperature measurement zone indicator to provide the user an approximate location from which the temperature is being reported.

6.6.4.1.2

The temperature measurement zone indicator shall consist of a transparent square box or box corners with a green border as shown in Figure 6.6.4.

6.6.4.1.3

The temperature measurement zone indicator shall be positioned in the center of the center vertical section of the viewing area (alarm and operational indicators) as shown in Figure 6.6.4.

6.6.4.1.4

Where the thermal imager is equipped with temperature measurement, the viewing area shall include a numeric temperature indicator, a temperature bar, or both.

6.6.4.1.4.1

The temperature bar shall be solid green in color. The temperature bar shall be calibrated to show four divided increments. The approximate temperature at each division shall be shown next to the temperature bar as shown in Figure 6.6.3 and Figure 6.6.4. The temperature measurement bar shall be positioned in the right vertical section of the viewing area (temperature sensing indicators) as shown in Figure 6.6.4.

6.6.4.1.4.2

The numeric temperature indicator shall display the approximate temperature emitted by an object targeted within the temperature measurement zone indicator as shown in Figure 6.6.4. The numeric temperature indicator shall be positioned in the lower right vertical section of the viewing area. This icon shall be readable green numerals followed by an “F” for Fahrenheit or “C” for Celsius superimposed on a black background.

6.6.4.1.5

Where the thermal imager is equipped with heat-indicating color capability, the right vertical section of the viewing area shall include a heat color reference bar that shall include the heat color reference scale as described in 6.6.4.1.9.

6.6.4.1.6

Where equipped with heat-indicating color capability, the heat color reference bar shall be located adjacent to the temperature bar, if equipped, and shall permit the user to interpret the approximate temperature reading displayed by the temperature bar as shown in Figure 6.6.4.

6.6.4.1.6.1

Where equipped with both the heat color reference bar and the temperature measurement bar, the heat color reference bar and the temperature measurement bar shall utilize only one set of temperature graduations.

6.6.4.1.6.2

Where equipped with only a heat color reference bar, the heat color reference bar shall have a graduation corresponding to the temperature settings of the thermal imager.

6.6.4.1.7

The temperature bar indicator shall be solid green in color. The temperature bar shall be calibrated to show four divided increments. Where a heat color reference bar is provided, the temperature bar shall advance vertically along the heat color reference bar in reference to the approximate temperature of the long wave infrared (LWIR) energy emitted by an object targeted by the temperature measurement zone.

6.6.4.1.8

The heat color reference bar shall be a vertical icon representing the entire dynamic range of the thermal imager in its current sensitivity mode and shall be divided into at least four temperature increments.

6.6.4.1.9

In the TI BASIC mode, the heat color reference bar shall have a color scale that includes only the following colorization:

(1) Grayscale — at the bottom of the heat color reference bar before color indication begins and shall not be more than 50 percent of the overall height of the heat color reference bar

(2) Yellow — at the low end of the heat color reference bar

(3) Orange — in the middle of the heat color reference bar

(4) Red — at the high end of the heat color reference bar

6.6.4.1.9.1

When the thermal imager is operating in the TI BASIC mode and is equipped with automatic temperature indicating colorization, the colors as specified in 6.6.4.1.9 shall correspond to approximate temperature ranges determined by the manufacturer.

6.6.4.1.9.2

The automatic temperature indicating color shall correspond to the colors on the heat color reference scale.

6.6.4.1.10

The heat color reference bar shall be legible, shall extend to at least 75 percent of the height of the thermal imager display, and shall be dynamic in that it will change if necessary to correspond to the temperatures set by the manufacturer in whatever sensitivity mode the thermal imager is in.

6.6.4.1.11

Whenever any change occurs in the scale of the color reference bar, a green triangle shall be displayed above and connected to the color reference bar as shown in Figure 6.6.4.

6.6.4.2 Automatic Heat-Indicating Colorization.

6.6.4.2.1

Where the thermal imager is equipped with automatic heat-indicating colorization, the TI BASIC and TI BASIC PLUS operational formats shall include colorization corresponding to approximate temperatures determined and set by the manufacturer with an associated dynamic heat color reference bar.

6.6.4.2.2

Colorization shall overlay the grayscale thermal images produced by the thermal imager. Details within the thermal image and within the colorized area shall remain resolvable by the user other than at saturation.

6.6.4.2.3

The colors yellow, orange, and red shall have a corresponding, temperature-dependent change in hue as temperatures increase.

6.6.4.2.4

Light yellow shall be displayed to depict the lowest temperature within the yellow temperature band, and the hue shall gradually change to a darker yellow to depict hotter temperatures within the yellow temperature band.

6.6.4.2.5

Orange shall start immediately following the hottest temperature in the yellow temperature band. Light orange shall be displayed to depict the lowest temperature within the orange temperature band, and the hue shall gradually change to a darker orange to depict hotter temperatures within the orange temperature band.

6.6.4.2.6

Red shall start immediately following the hottest temperature in the orange temperature band. Light red shall be used to depict the lowest temperature within the red temperature band, and the hue shall gradually change to a darker red to depict hotter temperatures within the red temperature band. The darkest shade of red in the red color band shall correspond to the hottest temperature in the scene.

6.6.4.3 Power Source Status.

6.6.4.3.1

A visual indicator shall display the status of power source. The visual indicator shall be a black battery icon with four colored segments corresponding to the available power source as shown in Figure 6.6.4.

6.6.4.3.2

The black battery symbol shall display the state of the available capacity from full to nearly depleted as specified below:

(1) Four green segments displayed (76 percent to 100 percent available power source)

(2) Three green segments displayed (51 percent to 75 percent available power source)

(3) Two yellow segments displayed (26 percent to 50 percent available power source)

(4) One red segment displayed (0 percent to 25 percent available power source), which shall flash when at least 5 minutes of available power source remains

6.6.4.3.3

The power source status indicator shall be positioned anywhere in the alarm and operational indicators (center vertical) section of the viewing area.

6.6.4.4 Internal Electronics Overheat Indicator.

6.6.4.4.1

All thermal imagers shall be equipped with an internal electronics overheat indicator that provides a visual warning to the user that the thermal imager might cease to operate properly due to internal overheating.

6.6.4.4.2

The internal electronics overheat icon shall be positioned in the upper center vertical (alarm and operational indicators) section of the viewing area as shown in Figure 6.6.4.

6.6.4.4.3

The internal electronics overheat indicator shall be a flashing indicator consisting of a solid red thermometer-shaped image within a transparent equilateral triangle having a red border as shown in Figure 6.6.4.

6.6.4.5 Thermal Imager-On Indicator.

If an additional visual indication to the user exists to indicate that the thermal imager is in the powered-on operational mode (other than a usable image on the display), the indicator shall be visible to the user any time the thermal imager is powered on.

6.6.4.6 Low Sensitivity Mode Indicator.

6.6.4.6.1

All thermal imagers equipped with a low sensitivity mode shall have a low sensitivity mode indicator.

6.6.4.6.2

The low sensitivity mode indicator shall be an icon consisting of a solid green equilateral triangle enclosed in a transparent square box with a green border as shown in Figure 6.6.4.

6.6.4.6.3

The low sensitivity mode indicator icon shall always be positioned in the uppermost left (additional information area) vertical section of the viewing area as shown in Figure 6.6.4.

6.6.4.6.4

Irrespective of number of sensitivity modes, the thermal imager shall display the low sensitivity mode indicator icon only when the thermal imager is not in its highest sensitivity mode.

6.6.4.7 TI BASIC PLUS Operational Format Indicator.

6.6.4.7.1

All thermal imagers equipped with a TI BASIC PLUS operational format shall have a TI BASIC PLUS operational format indicator. A visual indicator shall appear only when a thermal imager is in the TI BASIC PLUS mode.

6.6.4.7.2

The TI BASIC PLUS operational format indicator shall consist of a solid green “plus sign” (+) enclosed in a transparent square box with a green border as shown in Figure 6.6.4.

6.6.4.7.3

The TI BASIC PLUS operational format indicator shall be positioned in the lower left (additional information area) vertical section of the viewing area as shown in Figure 6.6.4.

6.6.4.7.4

The TI BASIC PLUS operational format indicator shall be displayed any time the thermal imager is not in the TI BASIC operational format irrespective of the number of operational formats.

6.6.4.8 TI BASIC PLUS Options Indicators.

6.6.4.8.1

Each visual indicator shall appear only when the associated feature is utilized.

6.6.4.8.2

Each TI BASIC PLUS option indicator shall consist of an indicator distinctly different from other indicators.

6.6.4.8.3

Each TI BASIC PLUS option indicator shall be displayed in the center of the left (additional information area) vertical section of the viewing area.

6.6.4.9 Audio/Video Recording Indicator.

6.6.4.9.1

All thermal imagers equipped with audio or video, or both, recording capabilities shall have a visual indicator.

6.6.4.9.2

The audio/video recording icon shall consist of a solid red circle with a green border.

6.6.4.9.3

The audio/video recording icon shall be positioned in the left vertical section, above the location of the TI BASIC PLUS icon, below a horizontal midline as shown in Figure 6.6.4.

6.6.4.9.4

The indicator shall be displayed anytime the thermal imager is recording audio or video, or both, content irrespective of the selected TI BASIC or TI BASIC PLUS operational format.

6.7* Hazardous Location Requirements.

6.7.1* General.

Thermal imagers and thermal imager electrical accessories, including the RFDC used for connection to other compatible devices, shall meet the requirements of this standard for one of the following types of explosion protection:

(1) Nonincendive equipment, stand-alone type (i.e., individual pieces of equipment separately certified for Class I and II, Division 2 and Class III applications, without any external electrical interconnection means, and intended for stand-alone use)

(2) Nonincendive equipment, electrically interconnected type (i.e., individual pieces of equipment separately certified for Class I and II, Division 2 and Class III applications, with external electrical interconnection means involving plugs and jacks, and intended for electrical interconnection to other separately certified nonincendive equipment, electrically interconnected types)

(3) Nonincendive system (i.e., multiple pieces of nonincendive equipment certified together for Class I and II, Division 2 and Class III applications, with electrical interconnection means, and intended for dedicated system use)

(4) Intrinsically safe apparatus, stand-alone type (i.e., individual pieces of apparatus separately certified for Class I and II, Division 1 and Class III applications, without any external electrical interconnection means, and intended for stand-alone use)

(5) Intrinsically safe system (i.e., multiple pieces of intrinsically safe apparatus certified together for Class I and II, Division 1 and Class III applications, with electrical interconnection means, and intended for dedicated system use)

6.7.1.1

Assessment shall include all user removable parts in isolation and the action of removing them from and reattaching them to the camera in the powered and unpowered states.

6.7.1.1.1

Where the use of a tool-secured feature is relied upon to meet the hazardous location requirements, and this securing feature is not automatically engaged during reattachment, the camera shall inform the user by way of a message that prevents normal use of the camera, unless the tool is required for reattachment to permit normal camera operation.

6.7.2 Nonincendive Equipment and Systems.

See S

PCs [1] SR-5 Hide Legisl

6.7.2.1 General.

Thermal imagers and thermal imager accessories shall, at a minimum, be suitable for use in Class I, Division 2, Groups C and D; Class II, Division 2, Groups F and G; and Class III, Divisions 1 and 2 hazardous (classified) locations, with a temperature class within the range of T3 through T6 inclusive in accordance with UL 121201, *Nonincendive Electrical Equipment for Use in Class I and II, Division 2 and Class III, Divisions 1 and 2 Hazardous (Classified) Locations*.

6.7.2.2 Interconnection of Nonincendive Equipment, Electrically Interconnected Types.

6.7.2.2.1

Interconnection of separately certified nonincendive equipment, electrically interconnected types, shall be by means of a plug and jack that comply with the RFDC requirements as specified in Section 11.10.

PCs [1] SR-7 Hide Legisl

6.7.2.2.2

The electrical parameters for this interconnection shall be in accordance with Table 6.7.2.2.2.

Table 6.7.2.2.2 Electrical Parameters for Interconnection of Nonincendive Equipment, Electrically Interconnected Types

RFDC as source	Required relationship	RFDC as sink
Uo ≤ 8 V	Uo ≤ Ui	Ui ≥10 V
Io ≤ 500 mA	Io ≤ Ii	Ii ≥ 1 A
Co ≥ 69 µF	Co ≥ Ci + Ccable*	Ci ≤ 68 µF
Lo ≥ 320 µH	Lo ≥ Li + Lcable*	Li ≤ 315 µH

*Assumption for cable capacitance (Ccable) and cable inductance (Lcable): 200 pF/m and 1 µH/m respectively.

PCs [1] SR-8 Hide Legisla

6.7.2.3 Interconnection of Nonincendive Systems.

Thermal imagers that are certified as part of a nonincendive system shall only be interconnected with thermal imager accessories also certified as part of the same nonincendive system.

6.7.3 Intrinsically Safe Apparatus and Systems.

PCs [1] SR-10 Hide Legisla

6.7.3.1

Thermal imagers and thermal imager accessories shall be permitted to be certified at a minimum for use in Class I, Division 1, Groups C and D; Class II, Division 1, Groups E, F, and G; Class III, Division 1 and 2 hazardous (classified) locations, with a temperature class within the range of T3 through T6 inclusive in accordance with UL 913, *Intrinsically Safe Apparatus and Associated Apparatus for Use in Class I, II, and III, Division 1 Hazardous (Classified) Locations*.

PCs [1] SR-9 Hide Legisla

6.7.3.2 Interconnection of Intrinsically Safe Systems.

Thermal imagers that are certified as part of an intrinsically safe system shall only be interconnected with thermal imager accessories also certified as part of the same intrinsically safe system.

SR-54 Hide Legisla

6.7.3.3

Passive electrical circuitry that relies on a supplemental device to energize it shall be exempt from explosion protection if the requirement in 6.7.3.3.1 is met.

6.7.3.3.1

The instructions supplied involving passive electrical circuitry shall indicate that the supplemental device used to energize the circuitry shall not be used or stored in a hazardous location unless certified for such use.

Global SC

Chapter 7 Thermal Imagers Performance Requirements (NFPA 1801)

Save As Word Show Revisions/Notes Show PI/PC's Quick Print

7.1 Thermal Imager Performance Requirements.

7.1.1

Thermal imagers shall be tested for spatial resolution as specified in Section 8.1, and shall have a minimum *SR* value of 0.06.

7.1.2

Thermal imagers shall be tested for effective temperature range as specified in Section 8.10, and shall have all ΔI values greater than or equal to 5000.

7.1.3

Thermal imagers shall be tested for thermal sensitivity as specified in Section 8.12, shall have a response slope greater than or equal to 0.02 per °C, and shall have a correlation coefficient greater than or equal to 0.80.

7.1.4

Thermal imagers shall be tested for ingress protection (IP) rating as specified in IEC 60529, *Degrees of protection provided by enclosures (IP Code)*, and shall have a rating of IP6X.

7.1.5

Thermal imagers shall be tested for electromagnetic emission as specified in IEC 61000-6-3, *Electromagnetic compatibility (EMC) — Part 6-3: Generic standards — Emission standard for residential, commercial, and light-industrial environments*, and shall meet the emissions requirements.

7.1.6

Thermal imagers shall be tested for electromagnetic immunity as specified in IEC 61000-6-2, *Electromagnetic compatibility (EMC) — Part 6-2: Generic standards — Immunity for industrial environments*, and shall meet the immunity requirements, and the thermal imager shall remain functional throughout the test.

7.1.7

Thermal imagers shall be tested for resistance to vibration as specified in Section 8.2, and shall have a minimum *SR* value of 0.06.

7.1.8

Thermal imagers shall be tested for resistance to impact as specified in Section 8.3, and shall have a minimum *SR* value of 0.06, shall have nothing fall off the thermal imager, and shall have no observable damage to any external component that would compromise the case integrity.

7.1.9

Thermal imagers shall be tested for corrosion resistance as specified in Section 8.4, and shall have metals that are inherently resistant to corrosion show no more than light surface-type corrosion or oxidation, shall have ferrous metals show no corrosion of the base metal, and shall have the use and function of controls and operating features of the thermal imager remain functional.

7.1.10

The thermal imager display viewing surface shall be tested for abrasion resistance as specified in Section 8.5, and shall not have the viewing surface exhibit an average delta haze greater than 14 percent.

7.1.11

Thermal imagers shall be tested for resistance to heat as specified in Section 8.6, and shall be able to resolve frequencies to the index number 4 of the spatial resolution target and shall not have any part of the thermal imager melt, drip, or ignite.

7.1.12

Thermal imagers shall be tested for resistance to heat and flame as specified in Section 8.7, and shall not have any afterflame exceed 2.2 seconds, shall have nothing fall off the thermal imager, and shall not have the thermal imager fall from its mounted position.

7.1.13

Thermal imager product labels shall be tested for durability and legibility as specified in Section 8.8, and shall have the product labels remain attached to the thermal imager, and the product labels shall be legible.

7.1.14

Where thermal imagers incorporate external wiring, the wire's entry into any associated components shall be tested for connection strength as specified in Section 8.9, and shall have a minimum connection strength of 89 N (20 lbf), and the thermal imager shall remain functional.

7.1.15

Thermal imagers shall be tested for durability as specified in Section 8.13, and shall have the thermal imager remain functional, shall have a minimum *SR* value of 0.06, shall have no water inside the electronics compartment(s), and shall have no water inside the power source compartment(s).

7.1.16

Thermal imagers shall be tested for field of view as specified in Section 8.11, and shall have a horizontal field of view of at least 36 degrees and shall have a vertical field of view of at least 20 degrees.

8.1 Image Recognition Test.

8.1.1 Application.

This test method shall apply to all thermal imagers. See NIST Technical Note 1630, *Evaluation of Image Quality of Thermal Imagers Used by the Fire Service*.

8.1.2 Samples.

Samples shall be complete thermal imagers.

8.1.3 Specimens.

8.1.3.1

Specimens for testing shall be complete thermal imagers.

8.1.3.2

A minimum of three specimens shall be tested.

8.1.3.3

Specimens shall be conditioned at a temperature of 22°C ± 3°C (72°F ± 5°F), and a relative humidity of 50 percent ± 25 percent, for at least 4 hours.

8.1.3.4

Specimens shall be tested within 5 minutes after removal from conditioning.

8.1.3.5

Specimens shall be optimally focused to 1 m (39.3 in.) by the manufacturer for this test. If the thermal imager incorporates a visible-light camera or other sensor whose output is overlaid onto, or fused with, the thermal image, the sensor shall be disabled prior to conducting the test so that only the thermal image output is used to influence image recognition test results.

8.1.4 Apparatus.

8.1.4.1

Testing shall be conducted in a room having an ambient temperature of 22°C ± 1°C (72°F ± 2°F).

8.1.4.2

The image recognition test apparatus shall consist of the following:

(1) A thermal imager positioning device

(2) A spatial resolution source target as specified in 8.1.4.3

(3) Ten temperature measurement devices as specified in 8.1.4.4

(4) Data acquisition software and hardware as specified in 8.1.4.5

(5) A visible spectrum camera and lens as specified in 8.1.4.7

(6) A visible spectrum camera mount as specified in 8.1.4.8

(7) A computer and image analysis software as specified in 8.1.4.9

(8)* A suitable application to convert RAW image files to 16-bit uncompressed color TIFF image file

8.1.4.2.1

The thermal imager shall be set up at a distance of 1 m ± 5 mm (39.3 in. ± .19 in.) from the outermost optical element to the image recognition target.

8.1.4.2.2

The ambient lighting in the testing room shall be 1 lux or less.

8.1.4.2.3

The test operator shall have visual acuity of at least 20/20 in each eye, uncorrected or corrected.

8.1.4.3

The spatial resolution source target shown in Figure 8.1.4.3 shall consist of two thin, rigid, flat metal surfaces: the emitting surface, and the stencil with the target and a 15 cm ± 5 mm × 15 cm ± 5 mm (5.9 in. ± 0.19 in. × 5.9 in. ± 0.19 in.) square cutout. The metal shall be copper for the emitting surface and aluminum for the stencil. Each surface shall have dimensions of 3 mm ± 0.5 mm (.11 in. ± .02 in.). The front side of both surfaces shall be painted with flat black paint having a stated emissivity of 0.95 ± 0.03.

Figure 8.1.4.3 Spatial Resolution Source Target.

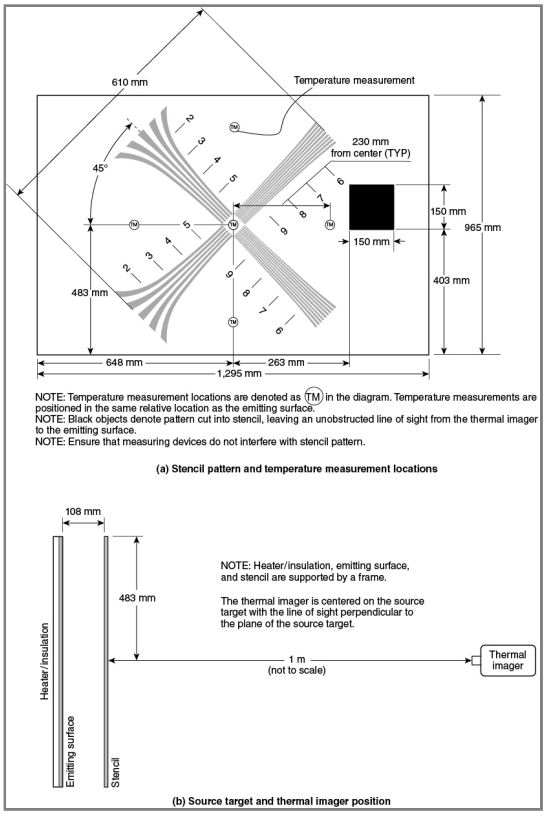

8.1.4.3.1

The emitting surface shall be capable of being evenly heated to a surface temperature of 32°C ± 1.0°C (90°F ± 1.8°F). The mechanism by which the emitting surface is heated shall not be visible to the thermal imager under test. The heating mechanism shall be permitted to add thickness to the side of the surface that does not face the thermal imager during the test.

8.1.4.3.2

The stencil shall be maintained at ambient temperature and shall have a pattern cut cleanly through it as shown in black in Figure 8.1.4.3.

8.1.4.3.3

Both surfaces shall be mounted such that their painted sides face the thermal imager under test, with the stencil placed directly between the emitting surface and the thermal imager at a distance of 102 mm ± 6 mm (4 in. ± ¼ in.) from the emitting surface.

8.1.4.4

Ten temperature measurement devices having a temperature measurement accuracy of at least 0.1°C (32.2°F) and a response time of less than 1 second shall be secured to the surfaces of the source target facing the thermal imager under test as shown in Figure 8.1.4.3.

8.1.4.4.1

Five temperature measurement devices shall be secured to the emitting surface, and five temperature measurement devices shall be secured to the stencil. The temperature measurement devices and leads secured to the emitting surface shall not be visible to the thermal imager under test.

8.1.4.4.2

The temperature measurement device leads secured to the stencil surface shall be painted with flat black paint having a stated emissivity of 0.95 ± 0.03 and shall not cross any of the open areas of the pattern cut into the stencil.

8.1.4.5

The data acquisition system consisting of software and hardware shall be capable of acquiring temperature measuring signals collected from the source target.

8.1.4.5.1

The data acquisition system shall average temperature measurements over a maximum of 10 seconds for each temperature measuring device.

8.1.4.5.2

The data acquisition system shall store the averaged temperature measurements in an electronic text file.

8.1.4.6

The thermal imager positioning device shall position the thermal imager facing the spatial resolution source target at a distance of 1 m ± 5 mm (39.4 in. ± 0.2 in.) from the outermost optical element to the stencil.

8.1.4.6.1

The thermal imager shall not wobble, vibrate, or otherwise move out of position during the course of the test.

SR-25 Hide Legisla

8.1.4.7

The visible spectrum camera shall be a Nikon D3, D3S, Z7 II, or an equivalent as needed to capture the thermal imager display. The equivalent camera shall be compatible with the settings specified in 8.1.4.7.3 or 8.1.4.7.4. The lens shall be a Nikkor 60 mm, f/2.8 macro lens or equivalent. Other lenses of equivalent quality shall be permitted to be used in cases where the thermal imager display size or configuration is incompatible with the use of the Nikkor 60 mm, f/2.8. Both lens and camera chosen for use shall be compatible with the NFPA image testing software.

8.1.4.7.1

The shutter shall be activated by a remote trigger release.

8.1.4.7.2

The visible spectrum camera shall be calibrated for color and luminance every 12 months.

PCs [1] SR-26 Hide Legisla

8.1.4.7.3

All visible spectrum camera settings other than those specified in the following list shall remain set at the factory default selections. The specific modifications to the visible spectrum camera settings shall be as follows:

(1) Exterior (button and switch) settings:

(a) Release mode “S”.

(b) Focus mode “M” (manual).

(c) Right side of view finder — Metering mode: 3-D color matrix II.

(d) Bottom right of the LCD — Focus mode: single-point AF (bottom of 3). Operator shall press the OK button to automatically center the focus point to the center of the Nikon camera display.

(e) Camera shall be turned on.

(f) If the lens has vibration reduction control, it shall be turned off (interior menu settings). (Click menu button to left of LCD to enter menu.)

(2) Shooting menu:

(a) Shooting menu bank — A

(b) Reset shooting menu — No

(c) Active folder — (N/A)

(d) File naming — (N/A) (or DSC default)

(e) Slot 2 — Overflow

(f) Image quality — NEF (RAW)

(g) Image area — Auto DX crop — Off

(h) JPEG compression — Size priority

(i) NEF RAW recording — Type — Off; NEF (RAW) bit depth — 14 Bit

(j) White balance — Direct sunlight — Center color; A-B — 0; G-M — 0

(k) Set picture control — Neutral

(l) Manage picture control — (N/A)

(m) Color space — sRGB

(n) Active D-lighting — Off

(o) Vignette control — Normal

(p) Long exposure NR — Off

(q) High ISO NR — Off

(r) ISO sensitivity settings — ISO sensitivity — 200; ISO sensitivity auto control — Off

(s) Live view — Live view mode — tripod; release mode — Single frame

(t) Multiple exposure — Off

(u) Interval timer shooting — Off

(3) Custom setting menu:

(a) Autofocus:

i. AF-C priority selection — Release

ii. AF-S priority selection — Focus

iii. Dynamic AF area — 9 points

iv. Focus tracking with lock-on — Off

v. AF activation — Shutter/AF-On

vi. Focus point illumination — Manual focus mode — On; Continuous mode — On; Focus point brightness — 0 Normal

vii. Focus point wraparound — No wrap

viii. AF point selection — AF51

ix. AF On button — AF-On

x. Vertical AF On button — AF-On

(b) Metering/exposure:

i. ISO sensitivity step value — 1/3
ii. EV steps for exposure control — 1/3
iii. EV steps for exposure compensation — 1/3
iv. Easy exposure compensation — Off
v. Center weighted area — Average
vi. Fine tune optimal exposure — No, do not continue

(c) Timers/AE lock:

i. Shutter release button/AE-L — Off
ii. Auto meter–off delay — 6 sec
iii. Self-timer delay — 10 sec
iv. Monitor-off delay — 10 sec

(d) Shooting/display:

i. Beep — Off
ii. Shooting speed — Continuous high-speed — 9 fps
iii. Max continuous release — 130
iv. File number sequence — On
v. Control panel/viewfinder — Rear control panel — ISO sensitivity; viewfinder display — Frame count
vi. Shooting info display — Auto
vii. LCD illumination — Off
viii. Exposure delay mode — Off

(e) Bracketing/flash:

i. Flash sync speed — 1/250
ii. Flash shutter speed — 1/60
iii. Modeling flash — On
iv. Auto bracketing set — AE and flash
v. Auto bracketing (Model M) — Flash/speed
vi. Bracketing order — MTR > under > over

(f) “F” Controls:

i. Multi-selector center button — Shooting mode — Off; Playback mode — Thumbnail on/off
ii. Multi-selector — Do nothing
iii. Photo info/playback — Off

(4) The manual mode settings and calibration procedure shall be as follows:

(a) Turn visible spectrum camera on.
(b) Turn thermal imager on.
(c) Select “Manual” for the camera exposure mode.
(d) Set thermal imager facing spatial resolution target as specified in 8.1.4.3.
(e) Use scroll wheel to adjust aperture setting on display to “22” for f/22.
(f) Set EV value to the center. (Hold down the +/− button next to the trigger release and adjust using the rear scroll wheel.)

(g) Adjust the shutter speed with the rear scroll wheel such that the brightness sensor is in the middle ± 1 dot (⅓ of a tick) — this is one click with the scroll wheel.

(h) The refresh rate of the display of the thermal imager shall be provided by the manufacturer.

(i) The shutter speed shall be at least twice the refresh rate of the thermal imager and less than 3 seconds. If this cannot be met with f/22 aperture, adjust the aperture to the closest value to f/22 so that the conditions can be met.

(j) Use a suitable application to determine if there are areas within the regions of interest (ROIs) that have either lost highlights or lost shadows. Lost highlights represent areas of overexposure, and lost shadows represent areas of underexposure. In the event that areas within the ROI are overexposed or underexposed, adjust the EV button toward the negative or positive, respectively, to make the image darker or lighter. Once the EV value is changed, change the shutter speed accordingly to align the brightness sensor to center again. The EV compensation value shall be as close to 0 as possible. *[See also, A.8.1.4.2(8).]*

SR-23 Hide Legisla

8.1.4.7.4

All Nikon Z7 II settings other than those specified below shall remain set at the factory default selections. The specific modifications to the Nikon Z7 II settings shall be as follows:

(1) Exterior (button and switch) settings:

(a) Right of Viewfinder — Set Photo/Movie Selector to Photography mode (top selection/camera illustration).

(b) Top-left dial — Mode Dial; hold down center release button and set to “M” (manual).

(c) Top-right scroll wheel — Adjust to change shutter speed.

(d) Top-right exposure button (+/-) illustration — Hold this button down and use the right-side scroll wheel to adjust the Exposure setting. Adjust exposure as necessary in conjunction with shutter speed per 8.1.4.7.4(4).

(e) ISO button — Set ISO to 200, hold this button down and use the right-side scroll wheel to adjust the ISO setting and override the menu setting; keep Auto ISO off, hold down the ISO button and use the front scroll wheel to turn Auto ISO.

(f) Turn camera on.

(2) Shooting Menu:

(a) Reset shooting menu — No

(b) File naming — (N/A) (or DSC default)

(c) Primary slot selection — SD card slot

(d) Choose image area — FX (36 x 24)

(e) Image quality — NEF (RAW)

(f) Image size — RAW L

(g) NEF RAW recording — Type — Off; NEF (RAW) bit depth — 14 Bit

(h) ISO sensitivity settings — 200; Auto ISO sensitivity control — Off

(i) White balance — Direct sunlight

(j) Set picture control — Neutral

(k) Color space — sRGB

(l) Active D-lighting — Off

(m) Long exposure NR — Off

(n) High ISO NR — Off

(o) Vignette control — Normal

(p) Diffraction compensation — On

(q) Portrait impression balance — Off

(r) Metering — Matrix

(s) Focus mode — AF-S

(t) AF area mode — N/A

(u) Vibration reduction — Off

(v) Auto bracketing — AE/Flash

(w) Multiple exposure — Off

(x) HDR (high dynamic range) — Off

(y) Interval timer shooting — Off

(z) Focus shift shooting — Off

(3) Custom Setting Menu:

(a) Autofocus:

i. AF-C priority selection — Release

ii. AF-S priority selection — Focus

iii. Focus tracking with lock-on — 5

iv. Focus points used — All

v. Store points by orientation — No

vi. AF activation — Shutter/AF-On

vii. Limit AF-area mode selection — Select all

viii. Focus point wraparound — No wrap

ix. Focus point options — Manual focus mode — on; Dynamic area AF assist — on

x. Low light AF — Off

xi. Built-in AF assist illuminator — On

(b) Metering/Exposure:

i. EV steps for exposure cntrl — ⅓

ii. Easy exposure compensation — Off

iii. Center weighted area — Average

iv. Fine-tune optimal exposure — No, don't continue

(c) Timers/AE Lock:

i. Shutter release button/AE-L — Off

ii. Self-timer delay — 10 sec; Number of shots — 1; Interval between shots — .5s

iii. Power off delay — Playback — 20s; Menus — 1m; Image Review — 4s; Standby timer — 30s

(d) Shooting/Display:

i. CL mode shooting speed — 5fps

ii. Max continuous release — 130

iii. Sync. release mode options — Sync

iv. Exposure delay mode — Off

v. Shutter type — Auto

vi. Extended shutter speeds (M) — Off

vii. Limit selectable image area — Select all

viii. File number sequence — On

ix. Apply settings to live view — On

x. Warm display colors — Off

xi. Image frame — Off

xii. Framing grid display — Off

xiii. Focus peaking — Off

xiv. View all in continuous mode — On

(e) Bracketing/Flash:

i. Flash sync speed — 1/200

ii. Flash shutter speed — 1/60

iii. Exposure comp for flash — Entire frame

iv. Auto flash ISO sensitivity control — Subject and background

v. Modeling flash — On

vi. Auto bracketing (mode M) — Flash/speed

vii. Bracketing order — MTR > under > over

(f) Controls:

i. Customize *"i"* menu — Default

ii. Custom Controls — Default

iii. OK button — Default

iv. Shutter speed and aperture lock — Off

v. Customize command dials — Reverse rotation — No; Change main/sub — Off; Aperture setting — Subcommand dial; Menus and playback — Off

vi. Release button to use dial — No

vii. Reverse indicators — +,,,,,,|,,,,,,− (Positive left, Negative right — For exposure compensation); this is the brightness sensor

viii. Reverse ring for focus — Off

ix. Focus ring rotation range — N/A

x. Switch focus/control ring roles — Off

xi. Assign MB-11 buttons — Default

(4) The manual mode settings and calibration procedure shall be as follows:

(a) Turn Nikon on.

(b) Turn thermal imager on.

(c) Select “Manual” for the camera exposure mode.

(d) Thermal imager facing spatial resolution target as specified in 8.1.4.3.

(e) Use front scroll wheel to adjust aperture setting on display to a minimum of “16” or f/16.

(f) EV value set to the center (Hold down the +/- button next to the trigger release and adjust using the rear scroll wheel.).

(g) Adjust the shutter speed with the rear scroll wheel such that the brightness sensor is in the middle ± 1 dot (⅓ of a tick) — this is one click with the scroll wheel.

(h) The refresh rate of the display of the thermal imager shall be provided by the manufacturer.

(i) The shutter speed shall be at least twice the refresh rate of the thermal imager and less than 3 seconds. If this cannot be met with f/16 aperture, adjust the aperture to the closest value to f/16 so that the conditions can be met.

(j) Use a suitable application to determine if there are areas within the regions of interest that either have lost highlights or lost shadows. Lost highlights represent areas of overexposure and lost shadows represent areas of underexposure. In the event that areas within the region of interest are overexposed or underexposed, adjust the EV button toward the negative or positive, respectively, to make the image darker or lighter. Once the EV value is changed, change the shutter speed accordingly to align the brightness sensor to center again. The EV compensation value shall be as close to 0 as possible.

8.1.4.7.5*

The visible spectrum camera focus shall be determined by looking in the lower left-hand side of the HUD within the viewfinder.

8.1.4.8

The visible spectrum camera shall be mounted such that the thermal imager display fills at least 90 percent of the FOV in the widest dimension.

8.1.4.8.1

The visible spectrum camera shall not wobble, vibrate, or otherwise move out of position during the course of the test.

8.1.4.8.2

A black shroud shall be placed around the visible spectrum camera and its view path to block out all light from the surrounding environment during all image capture.

8.1.4.9

The image analysis software shall open 16-bit uncompressed color image files, convert the image files to 16-bit uncompressed grayscale images, determine the pixel intensities of selected pixels, calculate the contrast transfer function of the selected pixels, and write the results to an electronic text file.

8.1.5 Spatial Resolution Procedure.

8.1.5.1

The thermal imager lens and display and the visible spectrum camera lens shall be cleaned in accordance with the manufacturer’s specifications. If any condensation or frost exists, it shall be removed.

8.1.5.2

The thermal imager shall be activated at least 3 minutes +1/−0 minute prior to the beginning of the test. Specimens shall operate in the TI BASIC mode.

8.1.5.3

The spatial resolution source target emitting surface temperature shall be stabilized at 32°C ± 1.0°C (90°F ± 1.8°F).

8.1.5.4

The thermal imager shall be oriented such that it is vertically centered and maximizes the visible area of the warm ROI. A similarly sized space on the opposite side for a room temperature ROI shall be included. The thermal imager shall be normal to the spatial resolution target.

8.1.5.5

The visible spectrum camera shall be placed at the optimum viewing position with respect to the thermal imager display, such that the thermal imager display fills at least 90 percent of the FOV in the widest dimension and is in focus.

8.1.5.6

A minimum of 10 uncompressed color images at a minimum bit depth of 16 bits shall be captured from the visible spectrum camera at a rate of one image every 3 seconds ± 0.1 second. The image having the lowest contrast shall be excluded.

SR-27 Hide Legisla

8.1.5.7

The 16-bit color images captured from the visible spectrum camera shall be converted in image analysis software to uncompressed grayscale images having a minimum bit depth of 16 bits using Equation 8.1.5.7.

$$\text{Grayscale} = 0.30 \times \text{red} + 0.59 \times \text{green} + 0.11 \times \text{blue} \quad \textbf{[8.1.5.7]}$$

8.1.5.8

An ROI shall be selected within the warm square on the right-hand side of the spatial recognition target that encapsulates 20 percent, ± 5 percent of the available square area excluding any text, symbols, and boundary regions; shall be centered as far from the boundary region as reasonably possible; and shall be labeled "W." *(See Figure 8.1.5.8.)* The image processing software shall apply ROIs to all images.

Figure 8.1.5.8 Region of Interest Selection.

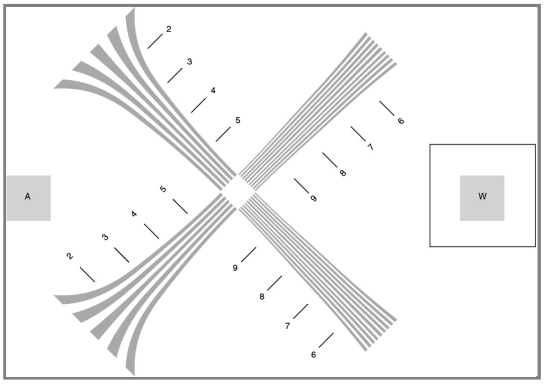

8.1.5.9

A second ROI shall be selected that is equal in size to the warm ROI; shall be directly opposite the warm ROI with respect to the center vertical axis of the spatial resolution target; shall contain ambient temperature pixels only and shall not interfere with the spatial resolution patterns; and shall be labeled "A." *(See Figure 8.1.5.8.)* The image processing software shall apply these ROIs to all images.

SR-28 Hide Legisla

8.1.5.10*

Using image analysis software, two separate pixel smoothing filters shall be applied to the ROIs. A moving average in two dimensions shall be applied to the ROIs, with the average having a period equal to the horizontal distance and vertical distance of the thermal imager display pixels observed in the captured images. It shall be labeled the 1X filter. A second filter shall be applied in the same manner as the 1X filter but with a period four times greater and shall be labeled the 4X filter. Both filters shall be applied to the original image; the resulting images shall be labeled W_{1X}, W_{4X}, A_{1X}, and A_{4X}, and shall be stored independently for further calculation.

SR-28 Hide Legisla

8.1.5.11

Image analysis software shall scan each of the four ROIs for the lightest pixel intensity (I_{max}) and the darkest pixel intensity (I_{min}). The software shall then find the contrast of each of the four ROIs using Equation 8.1.5.11.

$$C = \frac{(I_{max} - I_{min})}{(I_{max} + I_{min})} \quad \textbf{[8.1.5.11]}$$

8.1.5.12

Noise warm (N_W) and noise ambient (N_A) shall be calculated as follows: N_W is the contrast of W_{4x} subtracted from the contrast of W_{1x}, and N_A is the contrast of A_{4x} subtracted from the contrast of A_{1x}.

8.1.5.13

N_W and N_A shall then be averaged and the resulting value is the noise of the image, N.

8.1.5.14

Noise shall be calculated for all images of the spatial resolution test.

8.1.5.15

The average pixel intensity, μ, of the W_{1x}ROI shall be calculated using Equation 8.1.5.15 and labeled μW_0.

$$\mu = \frac{1}{N}\sum_{i=1}^{N} x_i \qquad \textbf{[8.1.5.15]}$$

8.1.5.16

The average pixel intensity, μ, of the A_{1x}ROI shall be calculated using Equation 8.1.5.15 and labeled μA_0.

8.1.5.17

The contrast shall be calculated using Equation 8.1.5.11 where $I_{max} = \mu W_0$ and $I_{min} = \mu A_0$. N shall be subtracted from this value and the resulting value shall be labeled C_0.

8.1.5.18

Each of the four sets of converging lines shall be rotated such that the center line is vertical before selecting a region of interest and performing calculations.

8.1.5.18.1

The region of interest shall be selected from index 1 to 5 on the low frequency bars, and from index 5 to 9 on the high frequency bars.

8.1.5.18.2

The ROI shall be drawn along the lines as specified in Figure 8.1.5.18.2.

Figure 8.1.5.18.2 Region of Interest Selection.

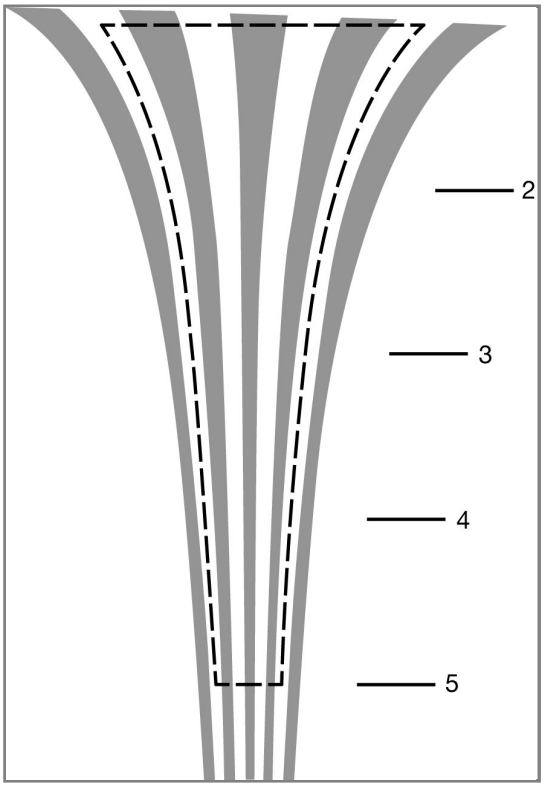

8.1.5.18.3

No symbology shall be included in the ROI. In the case where symbology interferes with the target, the ROI shall be drawn around the interference such that horizontal lines are perpendicular to the center line and equal portions of white and dark areas are included. The line drawn to bisect the target at the “5” mark on the image must be as horizontal as possible.

SR-29 Hide Legisla

8.1.5.19

Image analysis software shall analyze each row in the ROIs of the converging lines. For each row, the maximum pixel intensity and the minimum pixel intensity shall be recorded. They shall be labeled I_{max} and I_{min}, respectively. For each row, the contrast C_i shall be found using Equation 8.1.5.11.

8.1.5.19.1

After all of the regions’ rows have been analyzed, the C_i values from the sets of converging lines in quadrant 1 and quadrant 3 shall be concatenated from lowest frequency to highest frequency. Likewise, the C_i values from the sets of converging lines in quadrants 2 and 4 shall be concatenated from lowest frequency to highest frequency. All of the C_i values shall be paired with their respective frequencies.

8.1.5.19.2

The noise value, N, shall be subtracted from each of the C_i values and then normalized to C_0 as shown in Equation 8.1.5.19.2:

$$CTF_i = (C_i - N)/C_0 \quad \text{[8.1.5.19.2}$$

8.1.5.19.3

The two resulting CTF_i curves shall be multiplied by π/4 in order to approximate the MTF of each ROI, resulting in curves $MTF_{i(up)}$ and $MTF_{i(down)}$. Each MTF_i curve shall be integrated resulting in SR_{up} and SR_{down}. Negative MTF_i values shall be set to zero before the integration.

8.1.5.19.4

The SR_{up} and SR_{down} values shall be averaged, resulting in the respective spatial resolution value for each image SR. The SR value shall be the average of each of the SR_i values.

8.1.6 Report.

The SR value shall be reported after the spatial resolution test.

8.1.7 Interpretation.

Any one specimen failing the test shall constitute failing performance.

8.2 Vibration Test.

8.2.1 Application.

This test method shall apply to all thermal imagers.

8.2.2 Samples.

Samples shall be complete thermal imagers.

8.2.2.1

Samples shall be conditioned as specified in 8.1.3.

8.2.2.2

The pretest image recognition values in the vertical and horizontal directions shall be recorded as specified in Section 8.1.

8.2.3 Specimens.

8.2.3.1

Specimens for testing shall be complete thermal imagers.

8.2.3.2

A minimum of three specimens shall be tested.

8.2.3.3

Specimens shall be conditioned at a temperature of 22°C ± 3°C (72°F ± 5°F), and a relative humidity of 50 percent ± 25 percent, for at least 4 hours.

8.2.3.4

Specimens shall be tested within 5 minutes after removal from conditioning.

8.2.4 Apparatus.

8.2.4.1

Product shall be tested on a typical package tester within the compartments specified in 8.2.4.2 through 8.2.4.4.

8.2.4.2

Compartments shall be set up as specified in Figure 8.2.4.2(a) and Figure 8.2.4.2(b).

Figure 8.2.4.2(a) Vibration Table Compartments — Top View (Not to Scale).

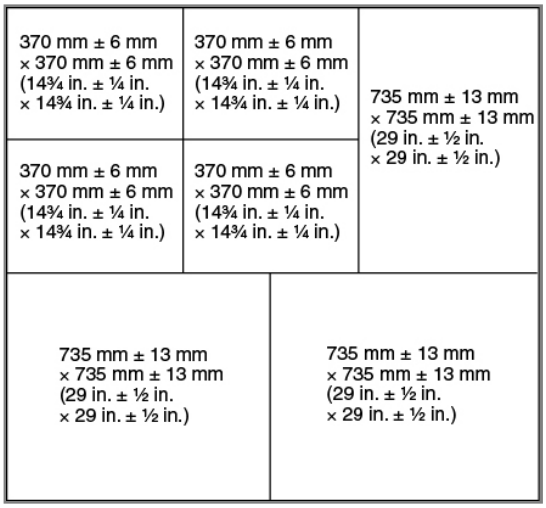

Figure 8.2.4.2(b) Vibration Table Compartments — Side View (Not to Scale).

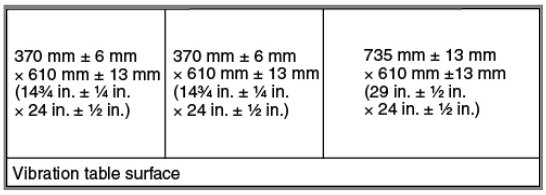

8.2.4.2.1

The sides and the base of the compartments shall be constructed of nominal 6 mm (¼ in.) stainless steel, and the top of the compartments shall remain open.

8.2.4.2.2

There shall be no burrs, sharp edges, surface discontinuities, or fasteners on the internal surfaces of the holding boxes.

8.2.4.3

The large compartments shall encase the complete thermal imager that is larger than 5161 mm^2 (8 $in.^2$).

8.2.4.4

The small compartments shall encase the complete thermal imager that is smaller than 5161 mm^2 (8 $in.^2$).

8.2.5 Procedure.

8.2.5.1

Test specimens shall be placed unrestrained in the compartments specified in 8.2.4.2, and where present, all product adjustments shall be fully extended.

8.2.5.2

Test specimens shall not be tied down.

8.2.5.3

The basic movement of the bed of the test table shall be a 25 mm, orbital path such as can be obtained on a standard package tester operating in synchronous mode at 250 rpm ± 5 rpm.

8.2.5.4

The test duration shall be 3 hours.

8.2.5.5

Test specimens shall be evaluated for image recognition as specified in Section 8.1, and the image recognition values recorded in the vertical and horizontal directions.

8.2.6 Report.

Each of the image recognition values in the horizontal and vertical directions shall be recorded and reported.

8.2.7 Interpretation.

One or more specimens failing this test shall constitute failing performance.

8.3 Impact Acceleration Resistance Test.

8.3.1 Application.

This test method shall apply to all thermal imagers.

8.3.2 Samples.

Samples shall be complete thermal imagers.

8.3.2.1

The pretest image recognition values in the vertical and horizontal directions shall be recorded as specified in Section 8.1.

8.3.3 Specimens.

8.3.3.1

Specimens for testing shall be complete thermal imagers.

8.3.3.2

A minimum of three specimens shall be tested.

8.3.3.3

Specimens shall be removed following the specified conditioning, and testing shall begin within 60 seconds of removal from conditioning.

8.3.4 Procedure.

8.3.4.1

Three specimens of product shall be subjected to a series of impact acceleration tests.

8.3.4.1.1

One test specimen for ambient temperature conditioning shall be exposed to a temperature of 23°C ± 1°C (73°F ± 2°F), for at least 4 hours.

8.3.4.1.2

One test specimen for cold temperature conditioning shall be exposed to a temperature of −20°C ± 1°C (−4°F ± 2°F), for at least 4 hours.

8.3.4.1.3

One test specimen for elevated temperature conditioning shall be exposed to a temperature of 60°C ± 1°C (140°F ± 2°F), for at least 4 hours.

8.3.4.2

Each product tested shall be complete with power source.

8.3.4.3

After conditioning, product shall be turned to the “on” position. Testing shall begin within 30 seconds of removal from conditioning.

8.3.4.4

Following each conditioning, the product shall be dropped a total of eight times from a distance of 2 m (6½ ft) onto a concrete surface so that impact is on each face and on one corner and one edge of the product.

8.3.4.5

The entire series of drops shall be completed within 10 minutes of removal from conditioning.

8.3.4.6

Specimens shall be evaluated for image recognition as specified in Section 8.1, and the image recognition values recorded in the vertical and horizontal directions.

8.3.4.7

Specimens shall be evaluated to determine that the thermal imager enclosure has not incurred damage that affects normal operation or enclosure integrity.

8.3.5 Report.

The *SR* value shall be recorded and reported.

8.3.6 Interpretation.

One or more specimens failing this test shall constitute failing performance.

8.4 Corrosion Test.

8.4.1 Application.

This test method shall apply to all thermal imagers.

8.4.2 Samples.

Samples shall be complete thermal imagers.

8.4.3 Specimens.

8.4.3.1

Specimens for testing shall be complete thermal imagers.

8.4.3.2

A minimum of three specimens shall be tested.

8.4.3.3

Specimens shall be conditioned at a temperature of 22°C ± 3°C (72°F ± 5°F), and a relative humidity of 50 percent, ± 25 percent, for at least 4 hours.

8.4.3.4

Specimens shall be tested within 5 minutes after removal from conditioning.

8.4.4 Procedure.

8.4.4.1

Specimens shall be tested in accordance with ASTM B117, *Standard Practice for Operating Salt Spray (Fog) Apparatus.* Salt spray shall be 5 percent saline solution, and the test exposure shall be for 48 hours, +30/−0 minutes. The chamber shall be stabilized at a temperature of 35°C ± 3°C (95°F ± 5°F).

8.4.4.2

Specimens shall be placed in the chamber in the typical operating position as used by first responders, as specified by the manufacturer.

8.4.4.3

At the conclusion of the salt spray period, specimens shall be stored in an environment of 22°C ± 3°C (72°F ± 5°F) at 50 percent ± 5 percent, relative humidity for a minimum of 48 hours.

8.4.4.4

Following the conditioning period, specimens shall be tested within 60 seconds of removal from conditioning.

8.4.5 Report.

The thermal imager shall be inspected for function of controls and operating feature. Corrosion shall be recorded and reported.

8.4.6 Interpretation.

One or more specimens failing this test shall constitute failing performance.

8.5 Viewing Surface Abrasion Test.

8.5.1 Application.

This test shall apply to all thermal imagers.

8.5.2 Samples.

Samples shall be complete viewing surfaces or representative plaques from thermal imagers.

8.5.3 Specimens.

8.5.3.1

Specimens for testing shall be complete thermal imager viewing surfaces or representative plaques.

8.5.3.2

Four specimens shall be taken. One of the four specimens shall be the setup specimen.

8.5.3.3

The test specimens shall include all of the following criteria:

(1) The specimen shall be a square measuring 50 mm × 50 mm (2 in. × 2 in.).

(2) Two edges of the square section shall be parallel within ±2 degrees of the axis of the cylinder or cone in the center of the sample.

8.5.3.4

Each of the specimens shall be cleaned in the following manner:

(1) The specimen shall be rinsed with clean tap water.

(2) The specimen shall be washed with a solution of nonionic/low-phosphate detergent and water using a clean, soft gauze pad.

(3) The specimen shall be rinsed with deionized water.

(4) The specimen shall be blown dry with clean compressed air or nitrogen.

8.5.3.5

Specimens shall be conditioned at a temperature of 22°C ± 3°C (72°F ± 5°F), and a relative humidity of 50 percent ± 25 percent, for at least 4 hours.

8.5.3.6

Specimens shall be tested within 5 minutes after removal from conditioning.

8.5.4 Apparatus.

The test apparatus shall be constructed in accordance with Figure 8.5.4(a) and Figure 8.5.4(b).

Figure 8.5.4(a) Lens Abrasion Tester.

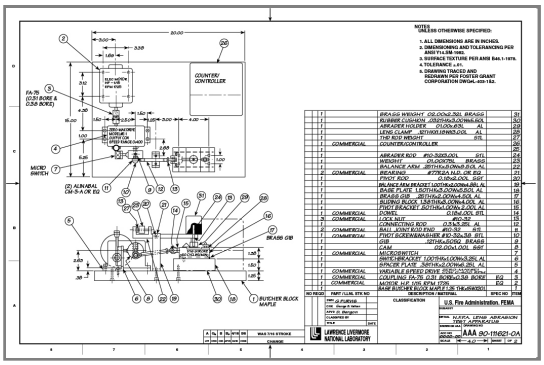

Figure 8.5.4(b) Lens Abrasion Tester (details).

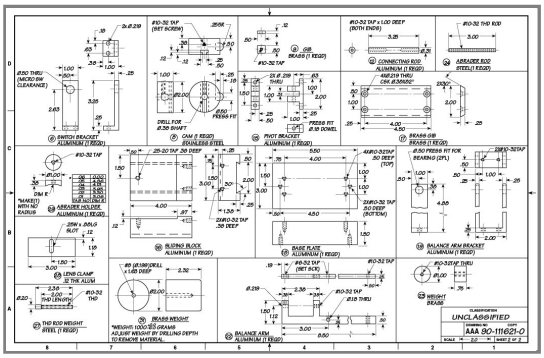

8.5.5 Procedure.

8.5.5.1

The haze of the specimen shall be measured using a haze meter in accordance with ASTM D1003, *Standard Test Method for Haze and Luminous Transmittance of Transparent Plastics,* and recorded with the following additions:

(1) The haze shall be measured in the middle 2 mm^2 (0.003 in^2) of the specimen.

(2) The specimen shall be repositioned to achieve the maximum haze value within the area defined in 8.5.5.1(1).

(3) The haze meter shall have a specified aperture of 22 mm (0.86 in.).

(4) The haze meter shall have a visual display showing 0.1 percent resolution.

(5) The haze meter shall be calibrated before and after each day's use following procedures specified in ASTM D1003, *Standard Test Method for Haze and Luminous Transmittance of Transparent Plastics*.

8.5.5.2

The setup specimen shall be placed cover side up in the test apparatus specimen holder.

8.5.5.2.1

The specimen holder shall be configured with a flat surface under the lens or with an inner radius support.

8.5.5.3

The pad holder shall consist of a cylinder 9.5 mm (0.4 in.) high and 25 mm (1 in.) in diameter with a radius of curvature equal to the radius of curvature of the outside of the lens in the viewing area ±0.25 diopter.

8.5.5.3.1

This cylinder shall be rigidly affixed to the stroking arm by a #10-32 UNF threaded rod.

8.5.5.4

The pad shall be a Blue Streak M306M wool felt polishing pad 23 mm (0.9 in.) in diameter.

8.5.5.5

The abrasive disc shall be made from 3M Part Number 7415, Wood Finishing Pad.

8.5.5.5.1

A disc 23 mm (0.9 in.) in diameter shall be cut from the abrasive sheet. The marked side of the disc shall be placed against the pad. Care shall be exercised to maintain this orientation for each abrasive disc throughout the testing.

8.5.5.6

The pad holder, pad, and abrasive disc shall be installed on the stroking arm.

8.5.5.6.1

The stroking arm shall be leveled to ± 3 degrees by adjusting the threaded pin. The pin shall be secured to prevent rotation of the pad holder. The axis of curvature of the pad holder shall be coincident with the axis of curvature of the lens.

8.5.5.7

The stroking arm shall be counterbalanced with the pad holder, pad, and abrasive disc in place.

8.5.5.8

The setup specimen shall be replaced with one of the three specimens to be tested.

8.5.5.9

A 1000 g ± 5 g (2.7 lb ± 0.16 oz.) test weight shall be installed on the pin above the test sample.

8.5.5.10

The test shall be run for 200 cycles ± 1 cycle.

8.5.5.10.1

One cycle shall consist of a complete revolution of the eccentric wheel.

8.5.5.11

The length of stroke shall be 14 mm (½ in.), producing a pattern 38 mm (1½ in.) long.

8.5.5.11.1

The frequency of the stroke shall be 60 cycles per minute ± 1 cycle per minute. The center of the stroke shall be within ± 2 mm (± 0.08 in.) of the center of the specimen.

8.5.5.12

The specimen shall be removed and cleaned following the test procedure.

8.5.5.12.1

The abrasive disc shall be discarded.

8.5.5.13

The haze of the sample shall be measured following the test procedure.

8.5.5.14

The delta haze shall be calculated by subtracting the initial haze from the final haze.

8.5.5.15

The testing steps specified in 8.5.5.8 through 8.5.5.14 shall be repeated two times with a new sample and abrasive disc.

8.5.6 Report.

The three delta haze values shall be averaged, recorded, and reported.

8.5.7 Interpretation.

The average delta haze shall be evaluated to determine pass or fail.

8.6 Heat Resistance Test.

8.6.1 Application.

This test method shall apply to all thermal imagers.

8.6.2 Samples.

Samples shall be complete thermal imagers.

8.6.3 Specimens.

8.6.3.1

Specimens for testing shall be complete thermal imagers.

8.6.3.2

A minimum of three specimens shall be tested.

8.6.3.3

Specimens shall be conditioned at a temperature of 22°C ± 3°C (72°F ± 5°F), and a relative humidity of 50 percent ± 25 percent, for at least 4 hours.

8.6.3.4

Specimens shall be tested within 5 minutes after removal from conditioning.

8.6.3.5

Manufacturers shall optimally focus specimens to a distance of 1 m for this test.

8.6.4 Apparatus.

The test oven shall be as specified in ISO 17493, *Clothing and equipment for protection against heat — Test method for convective heat resistance using a hot air circulating oven.*

8.6.5 Procedure.

8.6.5.1

Testing shall be performed in accordance with ISO 17493, *Clothing and equipment for protection against heat — Test method for convective heat resistance using a hot air circulating oven,* using the following parameters:

(1) A test fixture capable of accommodating the device being tested shall be used.

(2) The test temperature shall be 260°C, +6/−0°C (500°F, +10/−0°F).

(3) Specimens shall be mounted in the “as worn” position on a test fixture, shall be operated in an “as used condition,” and shall not touch any oven surface.

(4) The test fixture shall not degrade the oven recovery time.

(5) The test fixture shall be designed to allow the specimens to be attached in the same configuration as the specimens’ mounting assembly attaches to the specimens.

8.6.5.2

The test fixture with the specimen attached shall be placed in the test oven perpendicular with the object lens facing perpendicular to the airflow of the oven.

8.6.5.3

The specimen shall be set to the “on” mode.

8.6.5.4

There shall be no obstructions between the specimen and the airflow. The test fixture shall position the specimen equidistant from all interior oven surfaces.

8.6.5.5

The test oven door shall not remain open more than 15 seconds. The air circulation shall be shut off while the door is open and turned on when the door is closed.

8.6.5.6

The total test oven recovery time shall not exceed 30 seconds. The thermocouple reading shall remain at 260°C, +6/−0°C (500°F, +10/−0°F) for the duration of the test.

8.6.5.7

The test specimen, mounted as specified, shall be exposed in the test oven for 5 minutes, +15/−0 seconds. The test exposure time shall begin when the test thermocouple recovers to 260°C, +6/−0°C (500°F, +10/−0°F).

8.6.5.8

After the specified exposure, the specimen shall be removed from the oven and immediately aimed perpendicularly at the spatial resolution target at a distance of 1 m, +0.01/−0 m. The highest resolvable index number on the spatial resolution target shall be recorded.

8.6.6 Specific Requirements for Testing Integrated Thermal Imaging Cameras.

Where an integrated thermal imager is configured in such a way that it cannot be immediately aimed at the spatial resolution target or its image cannot be evaluated after the specified oven exposure without potential health and safety hazards to the testing technician, the thermal imager shall be immediately placed in the thermal imager positioning device specified in 8.1.4.2 and an image shall be taken with the visible spectrum camera specified in 8.1.4. The highest resolvable index number on the spatial resolution target shall be identified from the image captured on the visible spectrum camera.

8.6.7 Report.

8.6.7.1

The highest resolvable index number on the spatial resolution target shall be recorded and reported.

8.6.7.2

Observations of melting, dripping, or ignition shall be recorded and reported for each specimen.

8.6.8 Interpretation.

8.6.8.1

One or more specimens failing this test shall constitute failing performance.

8.6.8.2

One or more specimens showing evidence of melting, dripping, or igniting shall constitute failing performance for this test.

8.7 Heat and Flame Test.

8.7.1 Application.

This test method shall apply to all thermal imagers.

8.7.2 Samples.

Samples shall be complete thermal imagers.

8.7.3 Specimens.

8.7.3.1

Specimens for testing shall be complete thermal imagers.

8.7.3.2

A minimum of three specimens shall be tested.

8.7.3.3

Specimens shall be conditioned at a temperature of 22°C ± 3°C (72°F ± 5°F), and a relative humidity of 50 percent ± 25 percent, for at least 4 hours.

8.7.3.4

Specimens shall be tested within 5 minutes after removal from conditioning.

8.7.4 Apparatus.

8.7.4.1

A thermal imager test fixture to hold the specimen in the test apparatus shall be permitted to be provided by the manufacturer and shall not impede the intended operation. The manufacturer-supplied test fixture shall not add any additional protection for the thermal imager that could alter this test.

8.7.4.2

Where a thermal imager test fixture is not supplied by the thermal imager manufacturer, the thermal imager test fixture shall be as specified in Figure 8.7.4.2(a) and Figure 8.7.4.2(b). The thermal imager test fixture shall be used in a manner that is representative of the end product's intended use.

Figure 8.7.4.2(a) Mounted Thermal Imager for Heat and Flame Test.

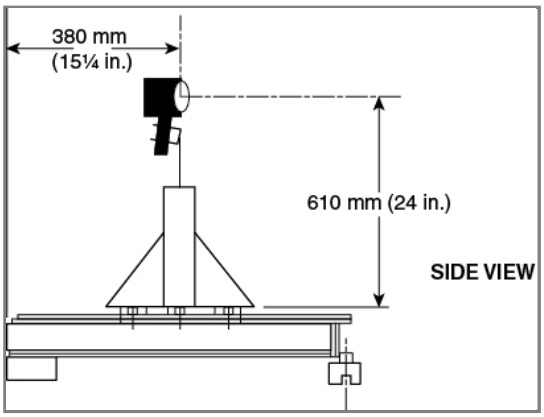

Figure 8.7.4.2(b) Thermal Imager Mounting Armature.

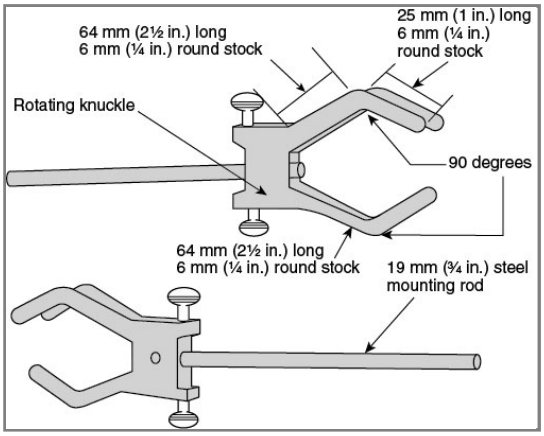

8.7.4.3

The specimens shall be mounted on the test fixture to simulate the intended-use position as specified in the manufacturer's instructions, ensuring that the orientation of the center axis of the thermal imager lens is perpendicular to the burner array, horizontally centered, and located 610 mm (24 in.) ± 25 mm above the base of the lift-cart subassembly.

8.7.4.4

The heat and flame test apparatus shall be as specified in Figure 8.7.4.4. The heat and flame test apparatus shall not be supplied by the thermal imager manufacturer.

Figure 8.7.4.4 Heat and Flame Test Apparatus.

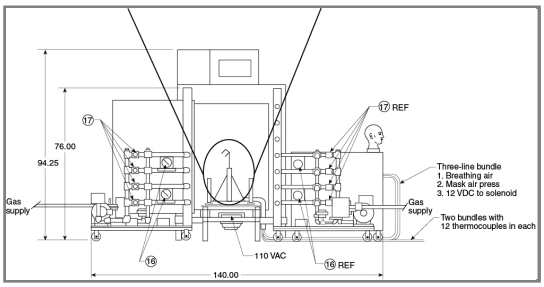

8.7.4.5

The test oven shall be a horizontal forced circulating air oven with an internal velocity of 61 m/min (200 ft/min) ± 15 m/min. The test oven shall have minimum dimensions of 915 mm depth × 915 mm width × 1220 mm (36 in. × 36 in. × 48 in.) height.

8.7.5 Procedure.

8.7.5.1

For calibration prior to the heat and flame test, the calibration mannequin shown in Figure 8.7.4.4 shall be exposed to direct flame contact for 10 seconds using the heat and flame test apparatus.

8.7.5.2

All peak temperature readings shall be within a temperature range of 815°C to 1150°C (1500°F to 2102°F).

8.7.5.3

The average mean of all peak temperature readings shall not be higher than 950°C (1742°F).

8.7.5.4

The test oven recovery time, after the door is closed, shall not exceed 1.0 minute.

8.7.5.5

Specimens mounted on the test fixture shall first be placed in the test oven, which has been preheated to 95°C ± 2°C (203°F ± 5°F), for 15 minutes, +15/−0 seconds. The test exposure time of 15 minutes shall begin after the door is closed and the oven temperature recovers to 95°C (203°F).

8.7.5.6

At the completion of the 15-minute exposure at 95°C ± 2°C (203°F ± 5°F), the oven door shall be opened, and the specimen mounted on the test fixture shall be moved out of the oven and into the center of the burner array.

8.7.5.7

The product shall then be exposed to direct flame contact for 10 seconds, +¼/−0 seconds. This exposure shall begin within 20 seconds of the product being removed from the test oven.

8.7.5.8

For integrated thermal imagers, the specimens shall be mounted on the test mannequin specified in 8.11.4 of NFPA 1981 in accordance with the thermal imager manufacturer's instructions to simulate the correct wearing position.

8.7.6 Report.

8.7.6.1

Any afterflame of the test specimen exceeding 2.2 seconds shall be recorded and reported.

8.7.6.2

Anything falling from the test specimen shall be recorded and reported.

8.7.6.3

Any test specimen falling from the mounted position shall be recorded and reported.

8.7.7 Interpretation.

8.7.7.1

One or more specimens failing this test shall constitute failing performance.

8.7.7.2

Any test specimen exceeding 2.2 seconds of afterflame shall constitute failing performance.

8.7.7.3

Any test specimen having parts or other items falling off shall constitute failing performance.

8.7.7.4

Any test specimen falling from its mounted position shall constitute failing performance.

8.8 Product Label Durability Test.

8.8.1 Application.

This test method shall apply to all product labels.

8.8.2 Samples.

Samples shall be complete thermal imagers.

8.8.3 Specimens.

8.8.3.1

Specimens for testing shall be complete thermal imagers with product labels attached.

8.8.3.2

A minimum of three specimens shall be tested.

8.8.3.3

Specimens shall be conditioned at a temperature of 22°C ± 3°C (72°F ± 5°F), and a relative humidity of 50 percent ± 25 percent, for at least 4 hours.

8.8.3.4

Specimens shall be tested within 5 minutes after removal from conditioning.

8.8.4 Procedure.

8.8.4.1

Specimens with all product labels attached shall be subjected to the tests specified in Section 8.4, Section 8.6, and Section 8.13.

8.8.4.2

After each test, the specimen product labels shall be examined at a distance of 305 mm (12 in.) +25/−0 mm by the unaided eye with 20/20 vision or vision corrected to 20/20.

8.8.4.3

The product labels shall be permitted to be wiped clean with an untreated cloth prior to being examined.

8.8.5 Report.

The legibility of each product label shall be recorded and reported.

8.8.6 Interpretation.

Any specimen failing the test shall constitute failing performance.

8.9 Cable Pullout Test.

8.9.1 Application.

This test method shall apply to thermal imagers and any associated assemblies with interconnecting wiring.

8.9.2 Samples.

Samples shall be complete thermal imagers.

8.9.3 Specimens.

8.9.3.1

Specimens for testing shall be complete thermal imagers with any associated assemblies with interconnecting wiring.

8.9.3.2

A minimum of three specimens shall be tested.

8.9.3.3

Specimens shall be conditioned at a temperature of 22°C ± 3°C (72°F ± 5°F), and a relative humidity of 50 percent ± 25 percent, for at least 4 hours.

8.9.3.4

Specimens shall be tested within 5 minutes after removal from conditioning.

8.9.4 Apparatus.

A mass of known weight with the means for attachment to wiring shall be provided.

8.9.5 Procedure.

A force of 89 N, +9/−0 N shall be applied gradually, in an axial direction to the wiring of the specimen tested.

8.9.6 Report.

8.9.6.1

Observations of the separation or nonseparation of interconnecting wiring shall be recorded and reported.

8.9.6.2

Observations of the proper specimen functionality shall be recorded and reported.

8.9.7 Interpretation.

8.9.7.1

Separation of interconnecting wiring of any specimen shall constitute failing performance.

8.9.7.2

Any improper functionality of any specimen, in accordance with the requirements of Chapter 6, Design Requirements, shall constitute failing performance.

8.10 Effective Temperature Range Test.

8.10.1 Application.

This test method shall apply to all thermal imagers.

8.10.2 Samples.

Samples shall be complete thermal imagers.

8.10.3 Specimens.

8.10.3.1

Specimens for testing shall be complete thermal imagers.

8.10.3.2

A minimum of three specimens shall be tested.

8.10.3.3

Specimens shall be conditioned at a temperature of 22°C ± 3°C (72°F ± 5°F), and a relative humidity of 50 percent ± 25 percent, for at least 4 hours.

8.10.3.4

Specimens shall be tested within 5 minutes after removal from conditioning.

8.10.4 Apparatus.

8.10.4.1

Testing shall be conducted in a room having an ambient temperature (T_{amb}) of 22°C ± 3°C (72°F ± 5°F).

8.10.4.2

The test apparatus shall consist of the following:

(1) A source target as specified in 8.10.4.3

(2) A thermal imager positioning device as specified in 8.10.4.4

(3) A visible spectrum camera and lens as specified in 8.10.4.5

(4) A visible spectrum camera fixture as specified in 8.10.4.6

(5) Image capturing software and hardware as specified in 8.10.4.7

(6) A computer

(7) Image analysis software as specified in 8.10.4.8

(8) A mirror with the dimensions of height of 203 mm (8 in.) ± 6 mm (0.25 in.), width of 254 mm (10 in.) ± 6 mm (0.25 in.), and a thickness of 6 mm (0.25 in.) ± 3 mm (0.125 in.)

8.10.4.3

The source target shall consist of surfaces arranged as shown in Figure 8.10.4.3. All surfaces shall have an emissivity of 0.95 ± 0.03. The use of a collimated source target shall be permitted.

Figure 8.10.4.3 Test Image for Effective Temperature Range Test.

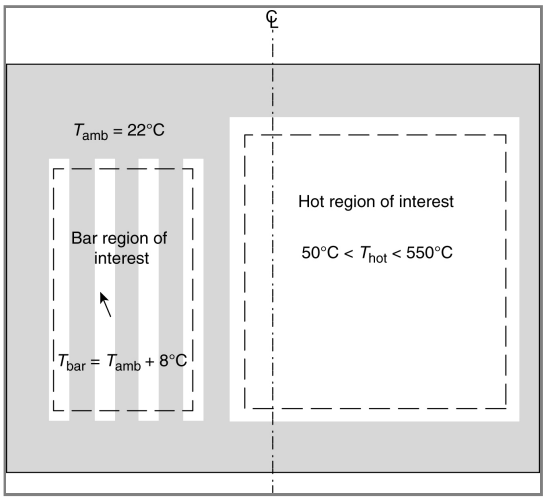

8.10.4.3.1

The surface labeled T_{hot} shall range in temperature from 50°C to 550°C (1022°F) and shall fill at least 25% ± 5% of the FOV. The radiation source producing the T_{hot} surface shall be a blackbody and shall have an emissivity of 0.95 ± 0.03. The source target shall be calibrated at least every 6 months. The nonuniformity of the blackbody shall not exceed 0.02. The blackbody temperature accuracy shall be ±0.5°C (±1°F). The stability of the emitting surface temperatures shall be 0.15°C. The mirror specified in 8.10.4.2(8) shall be used to reflect the hot surface into the camera's FOV, if necessary, to meet the 25% ± 5% requirement.

8.10.4.3.2

The bars in the right region of the source target and the conjugate spaces between the bars shall be 13 mm ± 0.1 mm (½ in. ± 0.003 in.) wide. The bars shall maintain a constant temperature (T_{bar}) of 8°C ± 0.5°C above the surfaces in the FOV, excluding the T_{hot} surface.

8.10.4.3.3

All surfaces in the FOV, excluding the T_{hot} and T_{bar} surfaces, shall be held constant at T_{amb}, 22°C ± 3°C (72°F ± 5°F).

8.10.4.4

The thermal imager shall be positioned so that the image center points to the surface labeled T_{hot} and the bars are in focus and are viewed at a frequency of 0.04 cyc/mrad. The thermal imager shall not wobble, vibrate, or otherwise move out of position during the course of the test.

8.10.4.4.1

When placed or replaced in the positioning device, the thermal imager shall always be positioned at the same distance, angle, and attitude relative to the source target.

8.10.4.5

The visible spectrum camera shall be a Nikon D3 as specified in 8.1.4.7.

8.10.4.6

The visible spectrum camera shall be mounted as specified in 8.1.4.8 such that the thermal imager display fills 90 percent of the FOV in the vertical dimension and is in focus.

8.10.4.7

The image capturing software and hardware shall permit 16-bit uncompressed color images to be downloaded from the visible spectrum camera to a computer or memory at a rate of one image every 3 seconds ± 0.1 second.

8.10.4.8

The image analysis software shall open 16-bit uncompressed color image files, convert the image files to 16-bit uncompressed grayscale images using a lossless conversion, select a group of pixels within an image, determine pixel intensities within the selected group, and write the results to a text file.

8.10.4.9

The high frequency noise created by oversampling the thermal imager's display shall be removed from the captured images. A moving average in two dimensions shall be applied to the ROI, with the average having a period equal to the width and height of the thermal imager display pixels observed in the captured images.

8.10.5 General Procedure.

8.10.5.1

The thermal imager lens and display and the visible spectrum camera lens shall be cleaned in accordance with the manufacturer's specifications.

8.10.5.2

The thermal imager shall be equipped with a fully charged power source.

8.10.5.3

The thermal imager shall be activated 3 minutes ± 1 minute prior to the beginning of the test.

8.10.5.4

All surface temperatures in the FOV shall be adjusted to the assigned temperatures and shall be allowed to come to steady-state prior to starting the test.

8.10.5.5

The visible spectrum camera shall be placed at the optimum viewing position with respect to the thermal imager display such that the thermal imager display fills 90 percent of the FOV in the vertical dimension and is in focus.

8.10.5.6

A black shroud shall be placed around the visible spectrum camera and its view path to block out all light from the surrounding environment during all image capture.

8.10.5.7

The image capturing software and hardware shall permit 16-bit uncompressed color images to be downloaded from the visible spectrum camera to a computer or memory at a rate of one image every 10°C ± 5°C (18°F ± 9°F), as T_{hot} increases from 50°C to 550°C (122°F to 1022°F).

8.10.5.8

Pixels that represent symbols, icons, and text shall be excluded from the analysis.

8.10.6 Effective Temperature Range Procedure.

8.10.6.1

The high frequency noise created by oversampling the thermal imager's display shall be removed from the captured images. A moving average in two dimensions shall be applied to the ROI, with the average having a period equal to the width and height of the thermal imager display pixels observed in the captured images.

8.10.6.2

The images shall be converted to uncompressed grayscale images having a minimum bit depth of 16 bits using Equation 8.1.5.7.

8.10.6.3

The bar pixel intensity differential, ΔI, as shown in the bar region of interest in Figure 8.10.4.3 shall be calculated for each row in each image as specified in Equation 8.10.6.3. All of the ΔI values for each image shall be averaged and recorded as ΔI for that image.

$$\Delta I = I_{max} - I_{min} \quad \textbf{[8.10.6.3]}$$

8.10.7 Report.

ΔI shall be reported and recorded.

8.10.8 Interpretation.

Any one specimen failing the test shall constitute failing performance.

8.11 Field of View (FOV) Measurement.

8.11.1 Application.

This test method shall apply to all thermal imagers.

8.11.2 Samples.

Samples shall be complete thermal imagers.

8.11.3 Specimens.

8.11.3.1

Specimens for testing shall be complete thermal imagers.

8.11.3.2

A minimum of three specimens shall be tested.

8.11.3.3

Specimens shall be conditioned at a temperature of 22°C ± 3°C (72°F ± 5°F), and a relative humidity of 50 percent ± 25 percent for at least 4 hours.

8.11.3.4

Specimens shall be tested within 5 minutes after removal from conditioning.

8.11.4 Apparatus.

8.11.4.1

Testing shall be conducted in a room having an ambient temperature of 22°C ± 3°C (72°F ± 5°F).

8.11.4.2

The FOV test apparatus shall consist of a calibrated rotary stage having a 0.5 degree angular accuracy and a thermal target. The use of a collimated thermal target shall be permitted.

8.11.5 Procedure 1, Horizontal FOV Measurement.

8.11.5.1

The thermal imager shall be mounted securely to the rotary stage and shall be oriented such that the horizontal axis of the display is parallel to the plane of rotation of the stage.

8.11.5.2

The thermal imager shall be powered on and operating in the TI BASIC mode.

8.11.5.3

The position of the thermal imager shall be adjusted as necessary such that the thermal target is at least 3 m (10 ft) away and in focus.

8.11.5.4

The rotary stage shall be turned to a position in which a distinct point on the thermal target is positioned at the center of the farthest left active image element of the thermal imager FOV.

8.11.5.4.1

The angular position, AH1, of the rotary stage shall be recorded.

8.11.5.5

The rotary stage shall be turned to a position in which the same distinct point on the thermal target is positioned at the center of the farthest right active image element of the thermal imager FOV.

8.11.5.5.1

The angular position, AH2, of the rotary stage shall be recorded.

8.11.5.6

The horizontal FOV is the absolute value of the difference between AH2 and AH1.

8.11.5.7

The thermal imager shall be powered off and removed from the rotary stage.

8.11.6 Procedure 2, Vertical FOV Measurement.

8.11.6.1

The thermal imager shall be mounted securely to the rotary stage. The thermal imager shall be oriented such that the vertical axis of the display is parallel to the plane of rotation of the stage.

8.11.6.2

The thermal imager shall be powered on and operating in the TI BASIC mode.

8.11.6.3

The position of the thermal imager shall be adjusted as necessary such that the thermal target is at least 3 m (10 ft) away and is in focus.

8.11.6.4

The rotary stage shall be turned to a position in which a distinct point on the thermal target is positioned at the center of the farthest bottom active image element of the thermal imager FOV.

8.11.6.4.1

The angular position, AV1, of the rotary stage shall be recorded.

8.11.6.5

The rotary stage shall be turned to a position in which the same distinct point on the thermal target is positioned at the center of the farthest top active image element of the thermal imager FOV. The angular position, AV2, of the rotary stage shall be recorded.

8.11.6.6

The vertical FOV is the absolute value of the difference between AV2 and AV1.

8.11.6.7

The thermal imager shall be powered off and removed from the rotary stage.

8.12 Thermal Sensitivity Test.

8.12.1 Application.

This test method shall apply to all thermal imagers.

8.12.2 Samples.

Samples shall be complete thermal imagers.

8.12.3 Specimens.

8.12.3.1

Specimens for testing shall be complete thermal imagers.

8.12.3.2

A minimum of three specimens shall be tested.

8.12.3.3

Specimens shall be conditioned at a temperature of 22°C ± 3°C (72°F ± 5°F), and a relative humidity of 50 percent ± 25 percent for at least 4 hours.

8.12.3.4

Specimens shall be tested within 5 minutes after removal from conditioning.

8.12.4 Apparatus.

8.12.4.1

Testing shall be conducted in a room having an ambient temperature (T_{amb}) of 22°C ± 3°C (72°F ± 5°F).

8.12.4.2

The thermal sensitivity test apparatus shall consist of the following:

(1) Two source targets as specified in 8.12.4.3 through 8.12.4.6

(2) Thermal imager positioning device as specified in 8.12.4.7 through 8.12.4.10

(3) Visible spectrum camera and lens as specified in 8.1.4.7

(4) Visible spectrum camera fixture as specified in 8.1.4.8

(5) Image capturing software and hardware as specified in 8.12.4.12

(6) Computer and image analysis software as specified in 8.12.4.13

8.12.4.3

The source targets shall both be flat-surface extended-area blackbodies arranged as shown in Figure 8.12.4.3, where the emitting surfaces are indicated as T_1 and T_2. The source targets shall be calibrated every 6 months.

Figure 8.12.4.3 Thermal Sensitivity Test Apparatus Configuration.

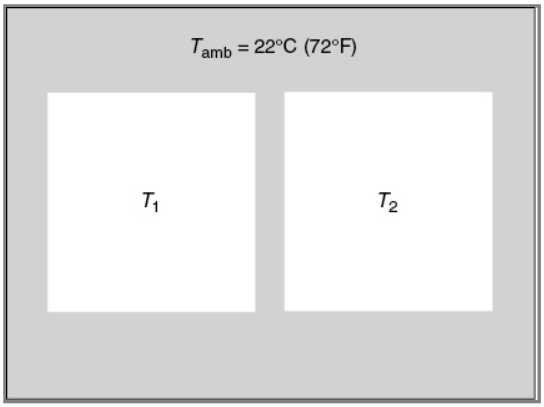

8.12.4.4

The emitting surfaces shall have dimensions of at least 102 mm × 102 mm and shall have an emissivity of 0.95 ± 0.03.

8.12.4.5

The temperature accuracy of the emitting surfaces shall be 0.02°C/−0.00°C (0.04°F/−0.00°F) or better.

8.12.4.5.1

The stability of the emitting surface temperatures shall be 0.01°C/−0.00°C (0.02°F/−0.00°F) or better.

8.12.4.6

The emitting surface of the source targets shall be equal in size ±10 percent, as viewed on the thermal imager's display.

8.12.4.7

The thermal imager positioning device shall position the thermal imager in front of the source targets such that the source targets fill at least 40 percent of the thermal imager's FOV. The thermal imager shall not be required to be in focus.

8.12.4.8

The thermal imager shall be centered on the space between the source targets with the line of sight perpendicular to the plane of the source targets.

8.12.4.9

The thermal imager shall not wobble, vibrate, or otherwise move out of position during the course of the test.

8.12.4.10

The visible spectrum camera shall not wobble, vibrate, or otherwise move out of position during the course of the test.

8.12.4.11

A black shroud shall be placed around the visible spectrum camera and its view path to block out all light from the surrounding environment during all image capture.

8.12.4.12

The image capturing software and hardware shall permit 16-bit uncompressed color images to be downloaded from the visible spectrum camera to a computer at a rate of one image every 3 seconds ± 0.1 second.

8.12.4.13

The image analysis software shall be capable of opening 16-bit uncompressed color image files, converting them to 16-bit uncompressed grayscale images using a lossless conversion, selecting a group of pixels within an image, determining the mean pixel intensity and standard deviation of pixel intensities within the selected group, and writing the results to a text file.

8.12.5 Procedure.

8.12.5.1

The thermal imager lens and display and the visible spectrum camera lens shall be cleaned in accordance with the manufacturer's specifications.

8.12.5.2

The thermal imager shall be equipped with a fully charged power source.

8.12.5.3

The thermal imager shall be activated 3 minutes ±1 minute prior to the beginning of the test.

8.12.5.4

Both source targets shall be stabilized to within ±0.02°C of their initial set-point temperatures. The temperature setting of the T_1 source target shall remain constant throughout the test.

8.12.5.5

The thermal imager shall be positioned such that the source targets fill at least 40 percent of the FOV and the axis of the thermal imager's outermost lens is perpendicular with the source target surface. The thermal imager shall not be required to be in focus.

8.12.5.6

The visible spectrum camera shall be placed at the optimum viewing position with respect to the thermal imager display such that the thermal imager display fills 90 percent of the FOV in the vertical dimension and is in focus.

8.12.5.7

Each thermal imager shall be tested with the source target T_1 at a set-point temperature of 30°C (86°F).

8.12.5.7.1

The T_2 source target shall be set at $T_2 = T_{amb} - 5°C$ and shall then be increased at a rate of 0.5°C/min until $T_2 = T_{amb} + 5°C$. Uncompressed color images at a minimum bit depth of 16 bits shall be captured from the visible spectrum camera at a rate of one image every 15 seconds ±0.1 second, while the T_2 temperature is increasing.

8.12.5.8

The images captured from the visible spectrum camera shall be converted to uncompressed grayscale images using a lossless conversion. The images shall have a minimum bit depth of 16 bits using Equation 8.1.5.7.

8.12.5.9

Two ROIs shall be used to select pixels for analysis in each image. Pixels representing the T_2 source target shall make up one of the ROIs, shall encompass at least 90 percent of the T_2 source target, and shall not include pixels located along the edge of the T_2 emitting surface.

8.12.5.9.1

Pixels representing ambient conditions shall make up the other ROI, which shall include the same number of pixels as the T_2ROI. The same ROIs shall be used on all images captured throughout the test.

8.12.5.9.2

Pixels that represent symbols, icons, and text shall be excluded from the analysis.

8.12.5.10

The high frequency noise created by oversampling the thermal imager display shall be removed from the captured images. A moving average in two dimensions shall be applied to the ROI with the average having a period equal to the width and height of the thermal imager display pixels observed in the captured images.

8.12.5.11*

The mean pixel intensity of each ROI in each image shall be calculated using Equation 8.1.5.15 and shall then be divided by 65,536. For each image, the resulting normalized pixel intensities for the T_{amb}ROI shall be subtracted from the T_2ROI, and the difference shall be plotted with respect to the T_2 source target temperature.

8.12.5.11.1

A linear trend line shall be fit to the plotted data using a least squares fit method. The slope of the trend line shall be the response slope. The goodness of fit of the data to the trend line shall be the correlation coefficient.

8.12.6

The response slope and the correlation coefficient shall be calculated, recorded, and reported.

8.12.7 Interpretation.

Any one specimen failing the test shall constitute failing performance.

8.13 Durability Test.

8.13.1 Application.

This test method shall apply to all thermal imagers.

8.13.2 Samples.

Samples shall be complete thermal imagers.

8.13.3 Specimens.

8.13.3.1

Specimens for testing shall be complete thermal imagers. Where the thermal imager is equipped with a retention device, the retention device shall be permitted to be removed prior to testing.

8.13.3.2

A minimum of three specimens shall be tested.

8.13.3.3

Specimens shall be conditioned at a temperature of 22°C ± 3°C (72°F ± 5°F), and a relative humidity of 50 percent ± 25 percent for at least 4 hours.

8.13.3.4

Specimens shall be tested within 5 minutes after removal from conditioning.

8.13.4 Apparatus.

8.13.4.1

An environmental conditioning test chamber shall be capable of accepting complete specimen thermal imagers.

8.13.4.2

The environmental conditioning test chamber shall be capable of maintaining and continuously monitoring the required conditions throughout the envelope of air surrounding the complete thermal imagers.

8.13.4.3

A water dunk container capable of covering and maintaining the uppermost point of the specimen thermal imagers with a depth of 1 m ± 0.1 m (40 in. ± 4 in.), of de-ionized water shall be used.

8.13.4.4

The water temperature in the water dunk container shall be 22°C ± 3°C (72°F ± 5°F). The water temperature shall not change more than 3°C (5°F) for the duration of the test.

8.13.4.5

A tumble test apparatus shall be as specified in Figure 8.13.4.5.

Figure 8.13.4.5 Tumble Test Apparatus.

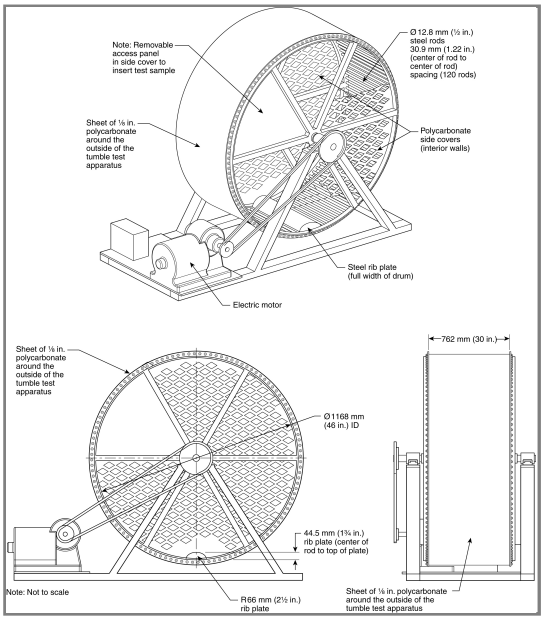

8.13.5 Procedure 1.

8.13.5.1

The pretest image recognition values in the vertical and horizontal directions shall be recorded as specified in Section 8.1.

8.13.5.2

The test specimen shall be placed in the environmental conditioning test chamber that has been stabilized at 60°C, +3°/−0°C (140°F, +5°/−0°F) and maintained for 4 hours.

8.13.5.3

The test specimen shall be removed following the conditioning specified in 8.13.5.2, and within 30 seconds the specimens shall be immersed in the water dunk container containing the deionized water for 30 minutes, +5/−0 minutes.

8.13.5.3.1

The test specimens shall be removed from the water dunk container, wiped dry, and placed in the environmental conditioning test chamber that has been stabilized at −20°C, +3°/−0°C (−4°F, +5°/−0°F) and maintained for a minimum of 4 hours.

8.13.5.3.2

Following the 4-hour conditioning of the test specimen at −20°C (−4°F), the test specimen shall be removed from the environmental conditioning test chamber and within 30 seconds shall be re-immersed in the water dunk container for 30 minutes, +5/−0 minutes.

8.13.5.4

The test specimens shall be removed from the water dunk container, wiped dry, and placed in the tumble test apparatus.

8.13.5.4.1

Only one specimen shall be tested in the tumble test apparatus at a time.

8.13.5.4.2

All specimens shall be unrestrained.

8.13.5.4.3

The tumble test apparatus shall be run at a speed of 15 rpm ± 1 rpm.

8.13.5.4.4

The test shall be run for 30 minutes, +5/−0 minutes.

8.13.5.4.5

Upon completion of the test duration, the specimens shall be immersed in the water dunk container for 30 minutes, +5/−0 minutes.

8.13.5.4.6

The test specimens shall be blown dry with clean compressed air or nitrogen until the lens and viewing windows are free from all moisture.

8.13.5.4.6.1

Evaluation of the three specimens shall begin within 5 minutes of completion of drying.

8.13.5.4.7

The specimens shall be evaluated for post-test image as specified in Section 8.1, and the post-test image recognition values in the vertical and horizontal directions shall be recorded.

8.13.5.4.8

One test specimen shall be selected at random, and its electronics compartment shall be opened and checked for water leakage.

8.13.6 Procedure 2.

8.13.6.1

One test specimen shall be selected at random from the remaining specimens submitted for testing to this section.

8.13.6.2

The random specimen shall be re-immersed in the water dunk container for 5 minutes. The power source compartment(s) shall be open, and the power source shall not be installed.

8.13.6.3

After the 5 minutes, +1/−0 minutes, the random specimen shall be removed from the water dunk container and shall be wiped dry.

8.13.6.4

The power source shall be reinstalled, and the random specimen shall be evaluated for post-test image as specified in Section 8.1. The post-test image recognition *SR* value shall be recorded.

8.13.6.5

The electronic compartment(s) of the random specimen shall be opened and inspected for water leakage.

8.13.7 Procedure 3.

8.13.7.1

The remaining test specimen shall be submitted for testing in accordance with Procedure 3.

8.13.7.2

The second random test specimen shall be activated and then immersed in the water dunk container for 5 minutes. After 5 minutes, +1/−0 minutes, the specimen shall be removed from the test water container and shall be wiped dry.

8.13.7.3

The second random test specimen shall be evaluated for post-test image as specified in Section 8.1, and the post-test image recognition *SR* value shall be recorded.

8.13.7.4

The second random test specimen shall be deactivated and any power supply compartment(s) and external power supplies shall be opened and inspected for water leakage.

8.13.8 Reports for Procedures 1, 2, and 3.

8.13.8.1

In Procedures 1, 2, and 3, the proper functioning of image recognition *SR* value shall be determined as specified in Section 8.1, and shall be calculated, recorded, and reported.

8.13.8.2

In Procedures 1, 2, and 3, any water leakage into any electronic compartment(s) shall be recorded and reported.

8.13.8.3

In Procedure 3, any water leakage into any power supply compartment(s) or external power supply shall be recorded and reported.

8.13.9 Interpretation.

Any one specimen failing any test shall constitute failing performance.

9.1 Administration.

9.1.1 Scope.

Chapters 9 through 13 shall identify the operating environment parameters, as well as the minimum requirements for the design, performance, testing, and certification of portable RF voice communications devices (RF devices) and remote speaker microphones (RSMs) for use by emergency services personnel (ESP) within the hazard zone during emergency incident operations without compromising compatibility with field emergency services communications networks.

9.1.1.1*

Chapters 9 through 13 shall specify requirements for RF devices and RSMs used by ESP in the hazard zone as the primary voice communications link.

9.1.1.2 Certification.

9.1.1.2.1

RF devices and RSMs shall be permitted to be certified individually or as a combination of an RF device and an RSM.

9.1.1.2.2

Certified RF devices and RSMs shall remain certified when connected to any other RSMs certified to this standard.

9.1.1.3

Except where referenced by this standard, requirements of other standards shall not apply.

SR-72 Hide Legisla

9.1.1.4*

An RF device or RSM shall be tested with any accessories or enhancements, including, but not limited to, touch screens, cellular broadband, or WiFi built into, installed, or attached to the RF device or RSM, as specified in Table 9.4.9, to ensure the performance and functions of the RF device or RSM.

9.1.1.5 Safety.

9.1.1.5.1

Chapters 9 through 13 shall not be construed as addressing all of the safety concerns, if any, associated with the use of this standard by testing facilities.

9.1.1.5.2

It shall be the responsibility of the persons and organizations that use this standard to establish safety and health practices and to determine the applicability of regulatory limitations prior to the use of Chapters 9 through 13 for designing, manufacturing, and testing.

9.1.1.6

Nothing herein shall restrict any jurisdiction or manufacturer from exceeding these minimum requirements.

9.1.2 Purpose.

9.1.2.1

The purpose of Chapters 9 through 13 shall be to establish minimum requirements for RF devices and RSMs manufactured for emergency services use in the hazard zone.

9.1.2.2

Controlled laboratory tests used to determine compliance with the performance requirements of Chapters 9 through 13 shall not be deemed as establishing performance levels for all situations, environments, and conditions to which RF devices and RSMs could be exposed.

9.1.2.3

Chapters 9 through 13 shall not be interpreted or used as a detailed manufacturing or purchase specification, but it shall be permitted to be referenced in purchase specifications as minimum requirements.

9.1.3 Application.

9.1.3.1*

Chapters 9 through 13 shall apply to all RF devices and RSMs for use by ESP in the hazard zone.

9.1.3.2

Chapters 9 through 13 shall also apply to RSMs not supplied with an RF device.

9.1.3.3

Chapters 9 through 13 shall apply to the design, performance, manufacturing, testing, and certification of new equipment for use by ESP.

9.1.3.4 Reserved.

9.1.3.5*

Chapters 9 through 13 shall not apply to compatible devices and accessories that could be built into or attached to a certified RF device or RSM before or after purchase, but that are not necessary for the RF device or RSM to meet the requirements of this standard.

9.1.3.6*

Chapters 9 through 13 shall not apply to criteria for use of an RF device or RSM by ESP in the hazard zone.

9.1.4 Units.

9.1.4.1

In Chapters 9 through 13, values for measurement are followed by an equivalent in parentheses, but only the first stated value shall be regarded as the requirement.

9.1.4.2

Equivalent values in parentheses shall not be considered as the requirement because those values are approximate.

9.2 General.

9.2.1

For the process of certification of RF devices and RSMs as being compliant with this standard, all RF devices and RSMs shall meet the requirements of Sections 9.1 through 9.8.

9.2.2 Certification and Accreditation.

9.2.2.1

All certification shall be performed by a certification organization that meets the requirements specified in Section 9.2 and that is accredited in accordance with ISO/IEC 17065, *Conformity assessment — Requirements for bodies certifying products, processes and services*.

9.2.2.2

The accreditation shall be issued by an accreditation body operating in accordance with ISO/IEC 17011, *Conformity assessment — General requirements for accreditation bodies accrediting conformity assessment bodies*.

9.2.3

Manufacturers shall not claim compliance with portions or segments of the requirements of Chapters 9 through 13 and shall not use the NFPA name or the name or identification of this standard in any statements about their respective product(s) unless the product(s) is certified as compliant with all applicable requirements of this standard.

9.2.4

Where RF devices or RSMs are compliant, the product shall be labeled and listed.

9.2.5

Where RF devices or RSMs are compliant, the product shall also have a product label that meets the requirements specified in Section 10.1.

9.2.6

The certification organization's label, symbol, or identifying mark shall be one of the following:

(1) Attached to the product label

(2) Part of the product label

(3) Immediately adjacent to the product label

9.3 Certification Program.

9.3.1

The certification organization shall not be owned or controlled by the manufacturers or vendors of the product being certified.

9.3.2

The certification organization shall be primarily engaged in certification work and shall not have a monetary interest in the product's ultimate profitability.

9.3.3 Accreditation.

9.3.3.1

The certification organization shall be accredited in accordance with ISO/IEC 17065, *Conformity assessment — Requirements for bodies certifying products, processes and services*.

9.3.3.2

The accreditation shall be issued by an accreditation body operating in accordance with ISO/IEC 17011, *Conformity assessment — General requirements for accreditation bodies accrediting conformity assessment bodies*.

9.3.4

The certification organization shall refuse to certify products to this standard that do not comply with all applicable requirements of this standard.

9.3.5

The contractual provisions between the certification organization and the manufacturer shall specify that certification is contingent on compliance with all applicable requirements of this standard.

9.3.5.1

The certification organization shall not offer or confer any conditional, temporary, or partial certifications.

9.3.5.2

Manufacturers shall not be authorized to use any label or reference to the certification organization on products that are not compliant with all applicable requirements of this standard.

9.3.6

The certification organization shall have laboratory facilities and equipment available for conducting required tests to determine product compliance.

9.3.6.1

The certification organization laboratory facilities shall have a program in place and functioning for calibration of all instruments, and procedures shall be in use to ensure accurate control of all testing.

9.3.6.2

The certification organization laboratory facilities shall follow best practices regarding the use of laboratory manuals, form data sheets, documented calibration and calibration routines, performance verification, proficiency testing, and staff qualification and training programs.

9.3.7

The certification organization shall require the manufacturer to establish and maintain a quality assurance program that meets the requirements of Section 9.5.

9.3.7.1

The certification organization shall require the manufacturer to have a product recall system as specified in Section 9.8 as part of the manufacturers' quality assurance program.

9.3.7.2

The certification organization shall audit the manufacturer's quality assurance program to ensure that the quality assurance program provides continued product compliance with this standard.

9.3.8

The certification organization and the manufacturer shall evaluate any changes affecting the form, fit, or function of the compliant product to determine its continued certification to this standard.

9.3.9

The certification organization shall have a follow-up inspection program of the manufacturer's facilities of the compliant product with at least two random and unannounced visits per 12-month period to verify the product's continued compliance.

9.3.9.1

As part of the follow-up inspection program, the certification organization shall select samples of the compliant product at random from the manufacturer's production line, from the manufacturer's in-house stock, or from the open market.

9.3.9.2

Samples shall be evaluated by the certification organization to verify the product's continued compliance to ensure that the materials, components, and manufacturing quality assurance systems are consistent with the materials, components, and manufacturing quality assurance that were inspected and tested by the certification organization during initial certification and recertification.

9.3.9.3

The certification organization shall be permitted to conduct specific testing to verify the product's continued compliance.

9.3.9.4

For products, components, and materials where prior testing, judgment, and experience of the certification organization have shown results to be in jeopardy of not complying with Chapters 9 through 13, the certification organization shall conduct more frequent testing of sample product, components, and materials acquired in accordance with 9.3.9.1 against the applicable requirements of this standard.

9.3.10

The certification organization shall have in place a series of procedures, as specified in Section 9.6, that address reports of situations in which a compliant product is subsequently found to be hazardous.

9.3.11 Appeals.

9.3.11.1

The certification organization's operating procedures shall provide a mechanism for the manufacturer to appeal decisions.

9.3.11.2

The procedures shall include the presentation of information from both sides of a controversy to a designated appeals panel.

9.3.12 Name and Label Protection.

9.3.12.1

The certification organization shall be in a position to use legal means to protect the integrity of its name and label.

9.3.12.2

The name and label shall be registered and legally defended.

9.4 Inspection and Testing.

9.4.1

For both initial certification and recertification of compliant products, the certification organization shall conduct both inspection and testing as specified in Section 9.4.

9.4.2

All inspections, evaluations, conditioning, and testing for certification or for recertification shall be conducted by a certification organization's testing laboratory that is accredited in accordance with the requirements of ISO/IEC 17025, *General requirements for the competence of testing and calibration laboratories*.

9.4.2.1

The certification organization's testing laboratory's scope of accreditation to ISO/IEC 17025, *General requirements for the competence of testing and calibration laboratories*, shall encompass testing of RF devices.

9.4.2.2

The accreditation of a certification organization's testing laboratory shall be issued by an accreditation body operating in accordance with ISO/IEC 17011, *Conformity assessment — General requirements for accreditation bodies accrediting conformity assessment bodies*.

9.4.3

A certification organization shall be permitted to utilize conditioning and testing results conducted by a product or component manufacturer for certification or recertification, provided the manufacturer's testing laboratory meets the requirements specified in 9.4.3.1 through 9.4.3.5.

9.4.3.1

The manufacturer's testing laboratory shall be accredited in accordance with the requirements of ISO/IEC 17025, *General requirements for the competence of testing and calibration laboratories*.

9.4.3.2

The manufacturer's testing laboratory's scope of accreditation to ISO/IEC 17025, *General requirements for the competence of testing and calibration laboratories*, shall encompass testing of RF devices.

9.4.3.3

The accreditation of a manufacturer's testing laboratory shall be issued by an accreditation body operating in accordance with ISO/IEC 17011, *Conformity assessment — General requirements for accreditation bodies accrediting conformity assessment bodies*.

9.4.3.4

The certification organization shall approve the manufacturer's testing laboratory.

9.4.3.5

The certification organization shall determine the level of supervision and witnessing of the conditioning and testing for certification or recertification conducted at the manufacturer's testing laboratory.

9.4.4

Sampling levels for testing and inspection shall be established by the certification organization and the manufacturer to ensure that products certified to this standard are compliant, unless such sampling levels are specified herein.

9.4.5

Inspection and evaluation by the certification organization shall include a review of all product labels to ensure that all required label attachments, compliance statements, certification statements, and other product information are at least as specified for RF devices in Section 10.1.

9.4.6

Inspection and evaluation by the certification organization shall include an evaluation of any symbols and pictorial graphic representations used on product labels or in user information, as permitted in 10.1.5, to ensure that the symbols are explained in the product's user information package.

9.4.7

Inspection and evaluation by the certification organization shall include a review of the user information required by Section 10.2 to ensure that the information has been developed and is available.

9.4.8

Inspection and evaluation by the certification organization for determining compliance with the design requirements specified in Chapter 11 shall be performed on whole or complete products.

9.4.9

Testing to determine compliance of the RF device and RF subscriber ensemble with the performance requirements specified in Chapter 12 shall be conducted by the certification organization in accordance with the specified testing requirements of Chapter 13 and in the order as specified in Table 9.4.9.

Table 9.4.9 Order of Testing for RF Devices and RF Subscriber Ensembles

Specimen 1–3	Specimen 4–6	Specimen 7–9	Specimen 10–12	Specimen 13–15	Specimen 16–18	Specimen 19–21	Compon
Speech Quality Test (Section 13.2)	Speech Quality Test (Section 13.2)	Speech Quality Test (Section 13.2)	Speech Quality Test (Section 13.2)	Speech Quality Test (Section 13.2)	Speech Quality Test (Section 13.2)	Speech Quality Test (Section 13.2)	Display Surface Abrasion (Section 13.7)
Antenna VSWR Swept Frequency Test (Section 13.20.5.4.1)	Power Source Performance Test (Section 13.18)	Antenna VSWR Swept Frequency Test (Section 13.20.5.4.1)	Antenna VSWR Swept Frequency Test (Section 13.20.5.4.1)	Antenna VSWR Swept Frequency Test (Section 13.20.5.4.1)	Antenna VSWR Swept Frequency Test (Section 13.20.5.4.1)	Antenna VSWR Swept Frequency Test (Section 13.20.5.4.1)	—
Heat and Flame Test (Section 8.9)	VibrationTest (Section 13.4)	Impact Acceleration Resistance Test (Section 13.5)	Water Drainage Test (Section 13.13)	Case Integrity Test (Section 13.12)	TIA Transmit Power (Section 13.15)	Tumble Vibration Test (Section 13.14)	—
Speech Quality Test (Section 13.2)	Speech Quality Test (Section 13.2)	Speech Quality Test (Section 13.2)	Speech Quality Test (Section 13.2)	Speech Quality Test (Section 13.2)	TIA Carrier Frequency Stability (Section 13.16)	Speech Quality Test (Section 13.2)	—
Power Source Performance Test (Section 13.18)	Power Source Performance Test (Section 13.18)	Power Source Performance Test (Section 13.18)	Corrosion Test (Section 13.6)	Power Source Performance Test (Section 13.18)	TIA Receiver Sensitivity (Section 13.17)	Power Source Performance Test (Section 13.18)	—
Antenna VSWR Swept Frequency Test (Section 13.20)	—	Antenna VSWR Swept Frequency Test (Section 13.20)	Speech Quality Test (Section 13.2)	Antenna VSWR Swept Frequency Test (Section 13.20)	Electronic Temperature Stress Test (Section 13.19)	Heat and Immersion Leakage Resistance (Section 13.3)	—
—	—	Cable Pullout Test (Section 13.11)	Power Source Performance Test (Section 13.18)	High Temperature Functionality Test (Section 13.8) includes Speech Quality Test (Section 13.2)	Heat and Immersion Leakage Resistance (Section 13.3)	—	—
—	—	Speech Quality Test (Section 13.2) (Wired applications only)	Antenna VSWR Swept Frequency Test (Section 13.20)	Speech Quality Test (Section 13.2)	Speech Quality Test (Section 13.2)	—	—
—	—	—	Product Label Durability Test (Section 13.10)	Power Source Performance Test (Section 13.18)	Power Source Performance Test (Section 13.18)	—	—

Specimen 1–3	Specimen 4–6	Specimen 7–9	Specimen 10–12	Specimen 13–15	Specimen 16–18	Specimen 19–21	Compon
—	—	—	—	Antenna VSWR Swept Frequency Test (Section 13.20)	Antenna VSWR Swept Frequency Test (Section 13.20)	—	—
—	—	—	—	Product Label Durability Test (Section 13.10)	Product Label Durability Test (Section 13.10)	—	—

9.4.9.1

Testing to determine compliance of RSMs that can be connected to the RF device with the performance requirements specified in Chapter 12 that can be connected to the RF device shall be conducted by the certification organization in accordance with the specified testing requirements of Chapter 13 and in the order as specified in Table 9.4.9.1.

Table 9.4.9.1 Order of Testing for Remote Speaker Microphones (RSMs)

Specimen 1–3	Specimen 4–6	Specimen 7–9	Specimen 10–12	Specimen 13–15	Specimen 16–18	Specimen 19–21	Component
Speech Quality Test (Section 13.2)	Speech Quality Test (Section 13.2)	Speech Quality Test (Section 13.2)	Speech Quality Test (Section 13.2)	Speech Quality Test (Section 13.2)	Speech Quality Test (Section 13.2)	Speech Quality Test (Section 13.2)	Display Surface Abrasion Test (Section 13.7)
Heat and Flame Test (Section 13.9)	Vibration Test (Section 13.4)	Impact Acceleration Resistance Test (Section 13.5)	Water Drainage Test (Section 13.13)	Case Integrity Test (Section 13.12)	Electronic Temperature Stress Test (Section 13.19)	Tumble Vibration Test (Section 13.14)	—
Speech Quality Test (Section 13.2)	Speech Quality Test (Section 13.2)	Cable Pullout Test (Section 13.11)	Speech Quality Test (Section 13.2)	Speech Quality Test (Section 13.2)	Heat and Immersion Leakage Resistance (Section 13.3)	Speech Quality Test (Section 13.2)	—
—	Speech Quality Test (Section 13.2)	Speech Quality Test (Section 13.2) (Wired applications only)	Corrosion Test (Section 13.6)	High Temperature Functionality Test (Section 13.8)	Speech Quality Test (Section 13.2)	—	—
—	—	—	Speech Quality Test (Section 13.2)	Speech Quality Test (Section 13.2)	Product Label Durability Test (Section 13.10)	—	—
—	—	—	Product Label Durability Test (Section 13.10)	Product Label Durability Test (Section 13.10)	—	—	—

9.4.9.2

Testing shall be performed on new RF devices, RSMs, or RF subscriber ensembles.

9.4.9.3

Testing shall be performed on specimens representative of materials and components used in the actual construction of the compliant product.

9.4.9.4

The certification organization also shall be permitted to use sample materials cut from a representative product.

9.4.9.5

Where any manufacturer-supplied accessories or enhancements are built into, attached to, or detachable from the RF devices, RSMs, or RF subscriber ensembles for use in the hazard zone, the certification organization shall do the following:

(1) Inspect and evaluate the RF devices, RSMs, and RF subscriber ensembles as specified in Chapter 11

(2) Test the RF devices, RSMs, and RF subscriber ensembles as specified in Chapter 13

9.4.9.6

The RF devices, RSMs, and RF subscriber ensembles shall meet all the performance requirements specified in Chapter 12 with those accessories and enhancements installed or attached to ensure that the performance and functions of the RF devices, RSMs, and RF subscriber ensembles are not reduced or otherwise negatively affected.

9.4.10

For evaluation and testing for certification purposes, the certification organization shall accept from the manufacturer only product or product components that are the same in every respect as the actual final product or product component.

9.4.11

The certification organization shall not allow any modifications, pretreatment, conditioning, or other such special processes of the product or any product component prior to the product's submission for evaluation and testing by the certification organization.

9.4.12

The certification organization shall not allow the substitution, repair, or modification — other than as specifically permitted herein — of any product or any product component during testing.

9.4.13

The certification organization shall not allow test specimens that have been conditioned and tested for one method to be reconditioned and tested for another test method unless specifically permitted in the test method.

9.4.14 Certification of Changes.

9.4.14.1

Material changes in the color, form, fit, or function of a compliant product shall necessitate new inspection and testing to verify compliance to all applicable requirements of Chapters 9 through 13 that the certification organization determines can be affected by such change.

9.4.14.2

This recertification shall be conducted before labeling the modified product as being compliant with Chapters 9 through 13.

9.4.15 Certification Data.

9.4.15.1

The manufacturer shall maintain all design, performance, inspection, and test data from the certification organization used in the certification of the manufacturer's compliant product.

9.4.15.2

The manufacturer shall provide such data, upon request, to the purchaser or authority having jurisdiction (AHJ).

9.4.16 Accessory Certification.

9.4.16.1

Where an RF device submitted for certification to this standard is also submitted with an accessory or compatible device that is built into or attached to the RF device, or sold for later attachment to the RF device, and an NFPA standard exists for the product performance associated with the accessory or compatible device, the accessory or compatible device shall be certified to the standard associated with the accessory or compatible device.

9.4.16.2

In all cases, such accessories or compatible devices shall not degrade the performance of the RF device.

9.4.16.3

Where an RF device is submitted as an accessory that is built into, attached to, or sold for later attachment to a product, and an NFPA standard exists for the product and the product is certified to that NFPA standard, the RF device shall be certified to NFPA 1930 (1802).

9.4.16.4

In all cases, the RF device shall not degrade the performance of the product.

9.5 Annual Verification of Product Compliance.

9.5.1

All RF devices and RSMs that are certified as compliant with Chapters 9 through 13 shall undergo annual verification.

9.5.2

This annual verification shall include the following:

(1) Inspection and evaluation to all design requirements as required by Chapters 9 through 13 on all manufacturer's models and components

(2) Testing to all performance requirements as required by Chapters 9 through 13 on all manufacturer's models and components within the following protocols:

  (a) Where a test method incorporates testing both before and after preconditioning and the test generates quantitative results, annual verification testing shall be limited to the conditioning that yielded the worst-case test result during the initial certification for the model or component.

  (b) Where a test method requires testing of three specimens, a minimum of one specimen shall be tested for annual verification.

  (c) Where a test method requires testing of five or more specimens, a minimum of two specimens shall be tested for annual verification.

9.5.3

Samples of manufacturer's models and components for annual verification acquired from the manufacturer or a component supplier during random and unannounced visits as part of the follow-up inspection program in accordance with 9.3.9 shall be permitted to be used toward annual verification.

9.5.4 Certification Data.

9.5.4.1

The manufacturer shall maintain all design, performance inspections, and test data from the certification organization used in the annual verification of manufacturer's models and components.

9.5.4.2

The manufacturer shall provide such data, upon request, to the purchaser or AHJ.

9.6 Manufacturers' Quality Assurance Program.

9.6.1

The manufacturer shall provide and operate a quality assurance program that meets the requirements of Section 9.6, including a product recall system as specified in 9.3.7.1 and Section 9.9.

9.6.2

The operation of the quality assurance program shall evaluate and test compliant product production to the requirements of Chapters 9 through 13 to ensure that production remains in compliance.

9.6.3

The manufacturer shall be registered to ISO 9001, *Quality management systems — Requirements.*

9.6.3.1

Registration to the requirements of ISO 9001, *Quality management systems — Requirements,* shall be conducted by a registrar that is accredited in accordance with ISO/IEC 17021-1, *Conformity assessment — Requirements for bodies providing audit and certification of management systems*.

9.6.3.2

The scope of the ISO registration shall include at least the design and manufacturing systems management for the product being certified.

9.6.3.3

The registrar shall affix the accreditation mark on the ISO registration certificate.

9.6.4

Any entity that meets the definition of *manufacturer* as specified in 3.3.77 and therefore is considered to be the “manufacturer,” but does not manufacture or assemble the compliant product, shall meet the requirements specified in Section 9.6.

9.6.5

Where the manufacturer uses subcontractors in the construction or assembly of the compliant product, the locations and names of all subcontractor facilities shall be documented and provided to the manufacturer’s ISO registrar and the certification organization.

9.7 Failure Mode and Effects Analysis (FMEA) for RF Devices and RSMs.

9.7.1*

An FMEA shall be applied throughout the development process.

9.7.2

The FMEA shall do the following:

(1) Address RF devices or RSMs

(2) Identify and prioritize those critical failures that could have a serious effect on the safety and reliability of a device in the anticipated operating environments

9.7.3 Failure Mode.

9.7.3.1

The FMEA shall tabulate potential failure modes and their effects on the performance of an RF device or RSM.

9.7.3.2

The failure mode shall describe how the system might fail.

9.7.4* FMEA Use.

9.7.4.1

The device manufacturer shall use FMEA to address the reduction of risk of random and systematic failures of the RF device or RSM by using as low as reasonably practical (ALARP) region activities, as shown in Figure 9.7.4.1.

Figure 9.7.4.1 ALARP Region Activities.

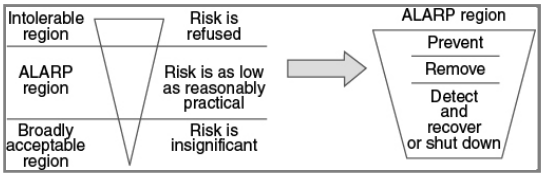

9.7.4.2

The device manufacturer shall include the risk priority number (RPN) corresponding to the upper limit of the ALARP region in the FMEA report.

9.7.5 ALARP Limits.

9.7.5.1

Where a device system RPN is above the upper limit of the ALARP region, as determined by the manufacturer, one or more of the practices specified in 9.7.5.2 shall be permitted.

9.7.5.2

Verification of the manufacturers’ design and testing practices shall include documentation of at least temperature, vibration, and wetness exposure data; hours of operation; and management of change information.

9.7.6

The FMEA report shall be provided to the certification organization.

9.8 Hazards Involving Compliant Product.

9.8.1 Hazardous Product Reporting Procedure.

9.8.1.1

The certification organization shall establish procedures for where a compliant product is reported as hazardous.

9.8.1.2

These procedures shall comply with the provisions of ISO Guide 27, *Guidelines for corrective action to be taken by a certification body in the event of misuse of its mark of conformity*, and as modified herein.

9.8.2

Where a report of a hazard involved with a compliant product is received by the certification organization, the validity of the report shall be investigated.

9.8.3

With respect to a compliant product, a hazard shall be a condition, or create a situation, that results in exposing life, limb, or property to a dangerous or imminently dangerous condition.

9.8.4

Where a specific hazard is identified, the determination of action for the certification organization and the manufacturer to undertake shall take into consideration the severity of the hazard and its consequences to the safety and health of users.

9.8.5

Where it is established that a hazard is involved with a compliant product, the certification organization shall determine the scope of the hazard, including products, model numbers, serial numbers, factory production facilities, production runs, and quantities involved.

9.8.6

The certification organization's investigation shall include, but not be limited to, the extent and scope of the problem as it might apply to other compliant product or compliant product components manufactured by other manufacturers or certified by other certification organizations.

9.8.7

The certification organization shall also investigate reports of a hazard where compliant product is gaining widespread use in applications not foreseen when the standard was written, such applications in turn being ones for which the product was not certified, and no specific scope of application has been provided in the standard, and no limiting scope of application was provided by the manufacturer in written material accompanying the compliant product at the point of sale.

9.8.8

The certification organization shall require the manufacturer of the compliant product or the manufacturer of the compliant product component, if applicable, to assist the certification organization in the investigation and to conduct its own investigation as specified in Section 9.8.

9.8.9

Where the facts indicating a need for corrective action are conclusive and the certification organization's appeal procedures referenced in 9.3.11 have been followed, the certification organization shall initiate corrective action immediately, provided there is a manufacturer to be held responsible for such action.

9.8.10

Where the facts are conclusive and corrective action is indicated, but there is no manufacturer to be held responsible, such as when the manufacturer is out of business or the manufacturer is bankrupt, the certification organization shall immediately notify relevant governmental and regulatory agencies and issue a notice to the user community about the hazard.

9.8.11

Where the facts are conclusive and corrective action is indicated, the certification organization shall take one or more of the following corrective actions:

(1) Parties authorized and responsible for issuing a safety alert shall be notified when, in the opinion of the certification organization, such a safety alert is necessary to inform the users.

(2) Parties authorized and responsible for issuing a product recall shall be notified when, in the opinion of the certification organization, such a recall is necessary to protect the users.

(3) The mark of certification shall be removed from the product.

(4) Where a hazardous condition exists and it is not practical to implement the corrective actions in 9.8.11(1), 9.8.11(2), or 9.8.11(3) or where the responsible parties refuse to take corrective action, the certification organization shall notify relevant governmental and regulatory agencies and issue a notice to the user community about the hazard.

9.8.12

The certification organization shall provide a report to the organization or individual identifying the reported hazardous condition and notify that organization or individual of the corrective action indicated or that no corrective action is indicated.

9.9 Manufacturers' Investigation of Complaints and Returns.

9.9.1

Manufacturers shall provide corrective action in accordance with ISO 9001, *Quality management systems — Requirements*, for investigating written complaints and returned products.

9.9.2

Manufacturers' records of returns and complaints related to safety issues shall be retained for at least 5 years.

9.9.3

Where the manufacturer discovers, during the review of specific returns or complaints, that a compliant product or compliant product component can constitute a potential safety risk to end users and is possibly subject to a safety alert or product recall, the manufacturer shall immediately contact the certification organization and provide all information about its review to assist the certification organization with the investigation.

9.10 Manufacturers' Safety Alert and Product Recall Systems.

9.10.1

Manufacturers shall establish a written safety alert system and a written product recall system that describes the procedures to be used in the event that they decide or are directed by the certification organization to either issue a safety alert or conduct a product recall.

9.10.2

The manufacturers' safety alert and product recall systems shall provide the following:

(1) The establishment of a coordinator and responsibilities by the manufacturer for the handling of safety alerts and product recalls

(2) A method of notifying all dealers, distributors, purchasers, users, and the NFPA about the safety alert or product recall that can be initiated within 1 week following the manufacturer's decision to issue a safety alert or to conduct a product recall or after the manufacturer has been directed by the certification organization to issue a safety alert or conduct a product recall

(3) Techniques for communicating the nature of the safety alert or product recall and, in particular, the specific hazard or safety issue found to exist

(4) Procedures for removing product that is recalled and for documenting the effectiveness of the product recall

(5) A plan for repairing or replacing product or for compensating purchasers for returned product

---

Chapter 10 Portable RF Voice Communication Devices Product Labeling and Information (NFPA 1802)

10.1 Product Label Requirements.

10.1.1

Every compliant RF device and RSM shall have a product label permanently attached to the complete assembled product.

10.1.2

Multiple label pieces shall be permitted to carry all statements and information required to be on the product label; however, all label pieces that the product label comprises shall be located adjacent to each other.

10.1.3 Labels and Lettering.

10.1.3.1

The certification organization's label, symbol, or identifying mark shall be attached to the product label or be part of the product label.

10.1.3.1.1

The label, symbol, or identifying mark shall be placed above, below, or to either side of the text.

10.1.3.2

The label, symbol, or identifying mark shall be at least 6 mm (¼ in.) in height.

10.1.3.3

All letters shall be at least 1.5 mm (1⁄16 in.) in height.

10.1.3.4

Arial font in capital letters shall be used for all label lettering.

10.1.4

All worded portions of the required product label shall be at least in English.

10.1.5

Symbols and other pictorial graphic representations shall be permitted to be used to supplement worded statements on the product label(s).

SCR-10 Hide Legisla

10.1.6

The following compliance statement shall be legibly printed on the product label:

CERTIFIED MODEL NFPA 1930 (1802), [*insert edition year*] ED.

DO NOT REMOVE THIS LABEL!

Detail SCR

SR-59 Hide Legisla

10.1.7

RF subscriber ensembles, RF devices, or RSMs originally certified to the previous edition of NFPA 1802 that have been upgraded to meet this edition of NFPA 1930 shall have the following statement legibly printed or displayed on a display at power up:

UPGRADED TO NFPA 1930 (1802), [*insert edition year*] ED.

10.1.7.1

The label shall not be restricted to one line.

10.1.7.2

The original NFPA required labeling shall not be removed or covered by the upgrade label.

10.1.8

Each RF device, rechargeable power source, certified accessory, and RSM shall be marked directly with the serial number and the year and month of manufacture.

10.2 User Information.

10.2.1

The manufacturer shall provide with each product at least the informational material and user instructions specified within this section.

10.2.2

At the time of purchase, the manufacturer shall provide to the purchaser an information sheet with each product that documents at least the following:

(1) Date of manufacture

(2) Model number

(3) Serial number

(4) Lot number, if applicable

10.2.3

Information and materials intended for the end user in the field regarding use shall be provided on at least the following topics:

(1) Safety considerations

(2) Recommended preuse (daily/shift) and periodic (monthly, quarterly, annually as recommended by the manufacturer) inspections, including connections to RSMs and attachment of accessories

(3) Limitations of use

(4) Power source requirements, type, and brand

(5) Estimated operation time on fully charged power source in each available mode

(6) Low-power source visual indicator and power supply replacement/recharging procedures, as applicable

(7) Location and description of device features, controls, knobs, buttons, displays, sounds, and their operational use, including any features that are programmable and can be defined by the AHJ

(8) Device/feature/RSM failure and fallback indications and operations

(9) Marking recommendations and restrictions to prevent damage to the case or impairment of operation

(10) Recommended storage practices

(11) Cleaning instructions and precautions for a typical firefighting environment

(12) Disinfecting procedures if exposed to chemical or biological hazards

(13) Periodic maintenance frequency and details

(14) Guidelines for requesting service and repair

10.2.4

Information and operational materials intended for RF communications systems administrators shall be provided on at least the following topics:

(1) Information and training regarding the availability, selection, and programming of RF devices and RSM programmable features and options

(2) Information and training regarding design and implementation of the RF devices and RSMs

(3) Information regarding periodic maintenance, warranty, service, repair, and unit replacement and retirement considerations for the RF devices and RSMs

(4) Maximum rated volume and associated volume control setting

(5) Maximum RF transmit power in all bands and modes of operation

PCs [1] SCR-6 Hide Legisla

10.2.5

The following statement shall appear on the first page of all operating manuals provided as specified in 10.2.3 and 10.2.4:

THIS DEVICE MEETS THE REQUIREMENTS OF NFPA 1930 (1802), [*insert edition year*] EDITION.

CCs [1] SCR-9 Hide Legisla

10.2.6

Equipment certified for use in hazardous locations shall be provided with at least the following information in user instructions or training materials:

(1) For RF devices and RSMs that are certified as nonincendive equipment, electrically interconnected types, the following:

(a) Identification as nonincendive equipment, electrically interconnected types

(b) Indication of the ability to interconnect with any other RF device and RSMs also certified and identified as nonincendive equipment, electrically interconnected types, in accordance with this standard

(2) For RF devices that are part of an intrinsically safe system, indication of the RSMs that comprise the intrinsically safe system in accordance with this standard.

Global SC

Chapter 11 Portable RF Voice Communication Devices Design Requirements (NFPA 1802)

Save As Word Show Revisions/Notes Show PI/PC's Quick Print

11.1 General Design Requirements.

11.1.1

All RF devices and all RSMs shall meet the applicable design requirements specified in 17.3.6 of NFPA 1225.

11.1.2 Interoperability.

11.1.2.1

All certified RF devices shall be interoperable with all certified RSMs.

11.1.2.2

The RF device shall be capable of being interoperable with wired and wireless certified RSMs.

11.1.2.3

RF devices shall not utilize or incorporate any proprietary software, firmware, hardware, or physical design that will prevent an RSM from meeting the requirements of Chapters 9 through 13.

11.1.3

All RF devices and RSMs shall have at least the applicable design requirements specified in this chapter when inspected and evaluated by the certification organization as specified in Section 9.5.

SR-65 Hide Legisla

11.1.4*

Transmission modes shall include, at a minimum, analog conventional FM and, where required by the AHJ, P25 conventional transmission modes.

SR-65 Hide Legisla

11.1.5

All displays shall have a visual indicator that displays the remaining capacity of the power source.

11.1.5.1

The power source visual indicator shall display the state of the available capacity from full to nearly depleted as follows and as shown in Figure 11.1.5.1:

(1) Four segments displayed — 76 to 100 percent available power source (High).

(2) Three segments displayed — 51 to 75 percent available power source (Medium).

(3) Two segments displayed — 26 to 50 percent available power source (Low).

(4) One segment displayed — 0 to 25 percent available power source (Critical), which also includes the following:

(a) The power source visual indicator flashes when 25 percent or less capacity remains.

(b) The RF device emits a recurring voice annunciation, “Battery critical,” configurable by the AHJ at least every 10 minutes when 25 percent or less capacity remains.

Figure 11.1.5.1 Power Source Visual Indicator.

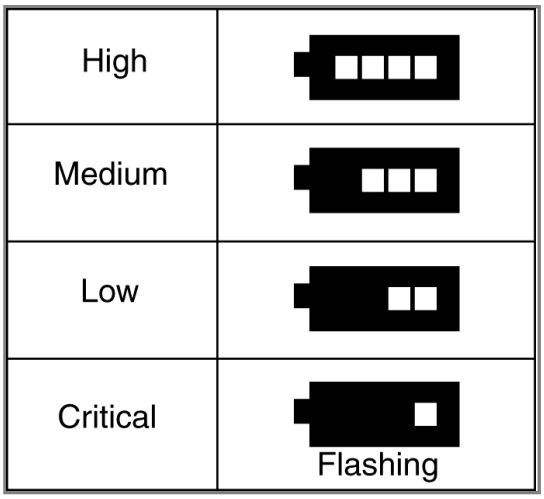

11.1.6 Service Life.

11.1.6.1

Unless otherwise specified, all operational controls, including, but not limited to, switches, buttons, and keys, shall be rated for a service life of not less than 50,000 cycles.

11.1.6.2

Rotary knobs shall be rated for a service life of not less than 10,000 cycles.

SR-57 Hide Legisla

11.1.7

All controls, input devices, and input methods shall be designed to prevent unintentional activation, deactivation, and change of operation.

11.1.8

All controls and connectors shall be capable of being operated by a gloved hand.

11.1.8.1

The gloves shall comply with the structural firefighting glove requirements of NFPA 1970.

11.1.8.2

The gloves shall meet the following additional requirements:

(1) The gloves shall be in as-received condition.

(2) The gloves shall be size 76w as specified in NFPA 1970.

(3) The outer shell shall be a minimum of 110.2 g/m^2 (3.25 oz/yd^2) American-sourced and -tanned cowhide.

(4) The thermal liner system shall be a minimum of 254.3 g/m^2 (7.5 oz/yd^2).

SR-31 Hide Legisla

11.2 Hazard Zone Mode.

11.2.1 Capability.

11.2.1.1*

All RF devices shall be capable of both the hazard zone mode and the nonhazard zone mode.

11.2.1.2

Hazard zone mode shall be programmable to one or more channels, talkgroups, or talk paths as assigned by the AHJ.

11.2.1.2.1

Hazard zone mode shall be enabled each time a hazard-zone-assigned channel, talkgroup, or talk path is selected.

11.2.1.3

The RF device shall have the capability to toggle the hazard zone mode via a deliberate action, which is programmable by the AHJ.

PCs [1]

11.2.2 Operation.

PCs [1]

11.2.2.1

The minimum volume of the RF device in the hazard zone mode shall be 54 dBA, +6/-0 dB, where measured by the method specified in Section 2.1.20 of TIA-603-E, *Land Mobile FM or PM — Communications Equipment — Measurement and Performance Standards*.

11.2.2.2*

The RF device in the hazard zone mode shall be capable of being programmed by the AHJ to be powered off with two separate actions.

11.3 Location of Controls and Features.

11.3.1

The RF device shall include the following:

(1) Speaker

(2) Microphone

(3) Minimum of one programmable side button capable of being programmed as required by the AHJ

(4)* Two-position programmable switch capable of being programmed as required by the AHJ

(5)* Three-position programmable switch capable of being programmed as required by the AHJ

11.3.2 Front Side.

The front of the RF device shall be the side facing the viewer when the push-to-talk (PTT) button is located on the left side.

11.3.3 Top Side.

The top of the RF device shall have the following controls and features:

(1) Power/volume knob

(2) Selector knob

(3) EAB (emergency alert button)

(4) External antenna, if so equipped

(5) Display

(6) Transmit/receive indicator

(7) Two programmable selector switches, one capable of at least three positions and one capable of at least two positions, capable of being programmed as required by the AHJ

11.3.4

Any additional controls or features on the top, front, rear, left side, or right side of the RF device shall not interfere with any of the required controls.

11.3.5 Left Side.

The left side of the RF device shall include the following:

(1) PTT button

(2)* At least one programmable button

11.3.6* Time-Out Timer.

11.3.6.1

The RF device shall have a transmit time-out timer, which shall be set at the factory for 1 minute.

11.3.6.2

This time-out timer shall be capable of being set by programming by the AHJ to values between 30 seconds and 180 seconds.

11.4 Power/Volume Knob.

11.4.1

The RF device shall have a power/volume knob that rotates clockwise to power on the RF device.

11.4.1.1

The power/volume knob shall have an audible and tactile click during the transition from power off to power on and the transition from power on to power off.

11.4.1.2

The power/volume knob shall control the volume.

11.4.1.2.1

A clockwise rotation of the power/volume knob shall increase the volume.

11.4.1.2.2

A counterclockwise rotation of the power/volume knob shall decrease the volume.

11.4.2

The RF device, or an RSM containing a loudspeaker, shall be capable of producing a sound pressure level of no less than 88 dBA with the volume control set to its maximum position when measured by the method specified in TIA-603-E, *Land Mobile FM or PM — Communications Equipment — Measurement and Performance Standards,* Section 2.1.20.

11.4.3

When the RF device is powered off in the hazard mode, it shall have the following voice annunciation at the volume specified in 11.13.5.1: “powering off.”

11.5 Selector Knob.

11.5.1 General.

11.5.1.1

The RF device shall have a programmable selector knob.

11.5.1.2

The selector knob shall be differentiated in size and shape from the power/volume knob.

11.5.2*

The selector knob shall have the following functions and features:

(1) Minimum of 16 positions

(2) Detent at each position

(3) Hard stops at the minimum and maximum positions

(4) Turning resistance designed to minimize accidental rotation

(5) Ability to change channels, talkgroups, or talk paths

11.6 Display.

11.6.1

The RF device shall include a primary display of at least eight characters visible without scrolling, with at least six additional characters visible with continuous scrolling.

11.6.2 Backlight Illumination.

11.6.2.1

The primary display shall be capable of being illuminated by means of backlighting when any RF device control is manipulated.

11.6.2.2

The backlight illumination time shall be programmable.

SR-58 Hide Legisla

11.6.3

All displays shall be capable of being backlit on the RF device that initiated the emergency mode, and on all RF devices that are receiving the emergency message, until reset in accordance with 11.8.9.

11.6.3.1

All display backlights shall meet the design requirements of 11.15.1.1.

11.6.3.2

The backlight illumination time for an RF device receiving an emergency activation shall be programmable.

11.6.4 Readability.

11.6.4.1

All displays shall be readable from a distance of 609.6 mm (2 ft) in all modes when backlit and in a completely dark room.

11.6.4.2

All displays shall be readable from a distance of 609.6 mm (2 ft) in all modes when backlit and in daylight.

11.7 Visual Indicators.

The RF device shall have visual indicators to inform the user of event conditions as specified in Section 11.16.

11.8 Emergency Alert Button (EAB).

11.8.1

The EAB shall be located adjacent to the base of the external antenna, if so equipped, or, if not so equipped, adjacent to a guiding feature on the top of the RF device.

11.8.2

The EAB shall be international orange in color.

11.8.3

The EAB shall comprise a minimum of 113 mm^2 (0.175 $in.^2$) of projected surface area.

11.8.4

The EAB shall be designed to minimize accidental activation.

11.8.5* Activation/Deactivation.

11.8.5.1

The EAB shall be activated after a continuous press of no less than 1 second and no more than 3 seconds, as determined by the AHJ.

11.8.5.2

After EAB activation, the EAB shall be capable of being programmed to be deactivated after a subsequent continuous press of at least 2 seconds.

11.8.6

The activation of the alert button shall cause the RF device to transmit an emergency alert in accordance with TIA-102.AABD, *Project 25 Trunking Procedures.*

11.8.7

The RF device shall transmit the user ID at the highest RF power the RF device is capable of transmitting and in compliance with the licensing authority.

11.8.7.1

Subsequent emergency transmissions shall be at the highest RF power the RF device is capable of transmitting and in compliance with the radio licensing authority until emergency activation is cleared.

11.8.7.2

The emergency signal shall use the trunking signaling block (TSBK) protocol when operating in analog conventional mode as specified in TIA-5045, *Numeric Identifier for Conventional Analog Operation*.

11.8.7.2.1*

The AHJ shall be permitted to select optional protocols in addition to the TSBK protocol, based on operational need.

11.8.8

The RF device shall have one of the following capabilities for voice transmission upon activation of the emergency button:

(1)* Remain on selected channels, talkgroups, or talk paths

(2)* Revert to preprogrammed transmission channels, talkgroups, or talk paths

11.8.8.1

Voice transmission, as specified in 11.8.7.1, shall be at the highest RF power the RF device is capable of transmitting and in compliance with the radio licensing authority.

11.8.8.2

Subsequent voice transmissions from the RF device that initiated the emergency signal shall be at the highest RF power the RF device is capable of transmitting until emergency activation is cleared.

11.8.9

The displayed emergency indication shall remain activated until reset by the initiating user as determined by the AHJ.

11.8.9.1

The receiving RF device shall be capable of allowing the AHJ to do the following:

(1) Configure it to emit a distinct audible tone for 3 sec ± 500 ms at maximum volume upon receipt of an emergency activation from another RF device

(2) Display user data by referring to an internally stored ID database

(3) Program the RF device to increase its audio output to maximum volume regardless of knob position

11.8.9.2

The receiving RF device shall display the user ID of the initiating RF device.

11.8.9.2.1

The user ID shall be permitted to be cleared from the display at the cessation of the emergency activation.

11.8.9.2.2*

Additional emergency alarms received during an incident shall be displayed together with prior emergency alarms of the same incident that have not been cancelled.

11.8.9.3 ID Display.

11.8.9.3.1

The RF device shall have the capability of displaying the user ID of at least 20 active emergency alerts.

11.8.9.3.2

The RF device shall be capable of displaying an ID of a minimum of 14 alphanumeric characters.

11.9 Remote Speaker Microphone.

11.9.1

All voice announcements and audible notifications from the RF device shall also be audible through the connected RSM.

11.9.2

The RSM shall have at least one PTT button.

11.9.3

The RSM shall have an EAB that meets the requirements of Section 11.8.

11.9.3.1

The EAB shall be located at the top of the RSM.

11.9.4 Visual Indicators.

11.9.4.1

The RSM shall be permitted to have visual indicators to inform the user of event conditions as specified in Section 11.16.

11.9.4.2

The RF device shall control the visual indicator color and status for the RSM with the data commands as specified in Table 11.22.1(a) and Table 11.22.1(b).

11.9.5* Programmable Button.

11.9.5.1

The RSM shall be permitted to include at least one programmable option button.

11.9.5.2

The RSM shall be permitted to specify the state of the programmable button, pressed or released, with the data commands specified in Table 11.22.1(a) and Table 11.22.1(b).

11.9.6

The RSM shall be permitted to connect to compatible devices via a wired or wireless connection.

11.10 RF Device Connector (RFDC).

11.10.1

An RF device or RSM using a wired connection shall support connection with a 10-pin miniature version of US MIL-DTL-55116 (M55116) or equivalent.

SR-70 Hide Legisl

11.10.1.1*

The RF device shall have an RFDC plug interface.

11.10.1.2

The RSM and compatible device shall have an RFDC jack.

11.10.1.3

The RFDC pin assignments shall be as specified in Figure 11.10.1.3 with requirements as specified in 11.10.1.3.1 through 11.10.1.3.10.

Figure 11.10.1.3 RFDC Pin Assignments.

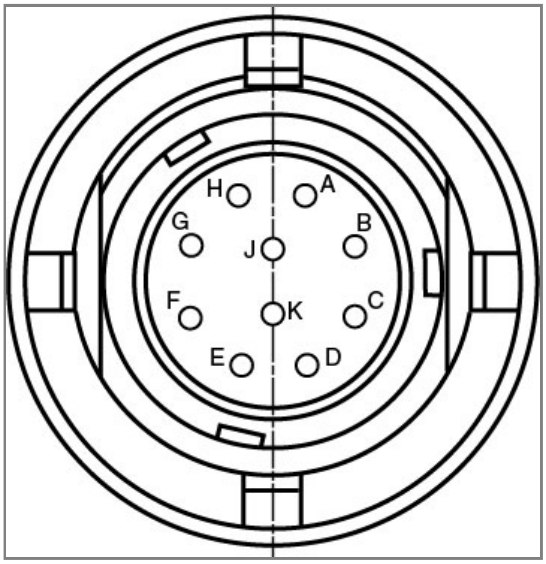

11.10.1.3.1 Power+.

11.10.1.3.1.1

Pin B shall be Power+, a DC voltage capable of providing power for a connected RSM or compatible device.

11.10.1.3.1.2

Power+ shall meet the requirements in Table 11.10.2.

11.10.1.3.2 GND.

Pin C shall be GND, also known as system ground, the Power+ current return path and the logic voltage signal reference.

11.10.1.3.3 D+.

11.10.1.3.3.1

Pin D shall be reserved for D+, one of the digital signal lines required for USB over which relevant commands are exchanged between RF device and RSM or other compatible device.

11.10.1.3.3.2

D+ shall meet the requirements specified in the Universal Serial Bus Specification Revision 2.0.

11.10.1.3.4 D−.

11.10.1.3.4.1

Pin E shall be D−, the digital signal line complementing D+ for USB.

11.10.1.3.4.2

D− shall meet the requirements specified in the Universal Serial Bus Specification Revision 2.0.

11.10.1.3.5 Speaker+.

11.10.1.3.5.1

Pin F shall be Speaker+, an RF device analog output capable of directly driving a loud speaker element.

11.10.1.3.5.2

Speaker+ shall meet the requirements in Table 11.10.2.

11.10.1.3.6 Speaker−.

11.10.1.3.6.1

Pin G shall be Speaker−, an RF device analog output complementary to Speaker+.

11.10.1.3.6.2

Speaker− shall meet the requirements in Table 11.10.2.

11.10.1.3.7 PTT.

11.10.1.3.7.1

Pin J shall be PTT, the logical state of an RSM or compatible device's PTT.

11.10.1.3.7.2

Logic LOW (0) shall indicate PTT is activated (i.e., pressed).

11.10.1.3.7.3

Logic HIGH (1) shall indicate the PTT is deactivated (i.e., released).

11.10.1.3.7.4

PTT shall meet the requirements in Table 11.10.2.

11.10.1.3.8 Emergency.

11.10.1.3.8.1

Pin K shall be Emergency, the logical state of an RSM or compatible device's EAB.

11.10.1.3.8.2

Logic LOW (0) shall indicate EAB is activated (i.e., pressed).

11.10.1.3.8.3

Logic HIGH (1) shall indicate the EAB is deactivated (i.e., released).

11.10.1.3.8.4

EAB shall meet the requirements in Table 11.10.2.

11.10.1.3.9 MIC+.

11.10.1.3.9.1

Pin A shall be Mic+, which shall be both a microphone element DC bias as well as the analog small signal output from the same microphone element.

11.10.1.3.9.2

Microphone element DC bias as well as the microphone small signal shall meet the requirements in Table 11.10.2.

11.10.1.3.10 MIC−.

Pin H shall be Mic−, the analog ground return for Mic+.

11.10.2

Where the RF device, RSM, or compatible device is equipped with the wired connection as specified in Section 11.10, it shall meet the requirements as specified in Table 11.10.2.

Table 11.10.2 Minimum Interface Electrical Requirements

Signal Name	RF Device		RSM or Compatible Device		Compatible Device		
	INPUT	OUTPUT	INPUT	OUTPUT	INPUT	OUTPUT	Conditions
POWER+(pin B)/GND(pin C)							
Supply voltage	—	5.25 vdc – 4.75 vdc	—	5.25 vdc – 4.75 vdc	—	—	Measured at respective output, reference to GND
Supply current	—	—	500 mA minimum	—	100 mA minimum	—	—
Speaker+(pin F)/Speaker −(pin G)							
Speaker drive power	—	1.5 W minimum	—	—	—	—	Measured at respective input, BTL configuration
Speaker impedance	—	—	—	8 ohms minimum	—	8 ohms minimum	—
Peak-to-peak voltage	—	20 v p-pmaximum	—	—	—	—	—
Mic+(pin A)/Mic−(pin H)							
Microphone signal	—	—	—	6.4 mV_{rms} – 10 mV_{rms}	—	6.4 mV_{rms} – 10 mV_{rms}	Microphone input stimulus 94 dBSPL
Microphone bias voltage	—	0.0 vdc	—	—	—	—	Open circuit
	—	6.0 vdc – 2.3 vdc	—	—	—	—	1 mA Mic+/Mic-load
PTT(pin J), Emergency Activation Button (pin K)							
R1	—	—	—	400 kΩ ± 5%	—	400 kΩ ± 5%	Reference Figure 11.10.3
R2	—	—	—	—	100 kΩ ± 5%	—	100 kΩ ± 5%

11.10.3

The PTT and EAB circuit topology shall be as specified in Figure 11.10.3.

Figure 11.10.3 PTT and EAB Circuit Topology.

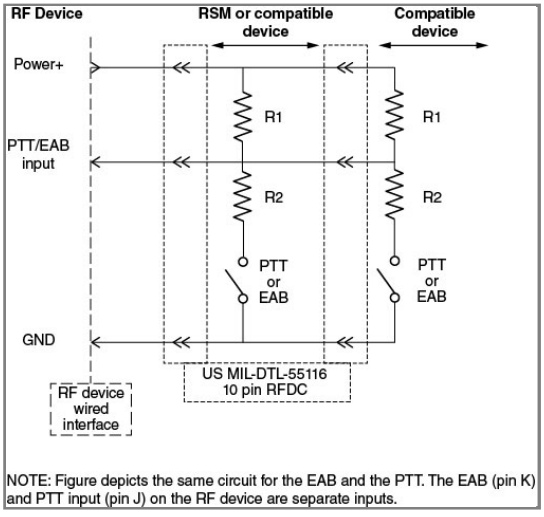

11.10.4

The RFDC shall be capable of being manipulated into its mate by a gloved hand as specified in 11.1.7.

11.11 Failure Detection of Connected RSMs.

11.11.1

The RF device shall detect a failure of a wired RSM or total loss of connection within 1 second of the failure in hazard zone mode.

11.11.2

The RF device shall detect a failure of a wireless RSM or total loss of connection within 5 seconds of the failure in hazard zone mode.

11.11.3

When a failure as specified in 11.11.1 or 11.11.2 occurs, at a minimum, the RF device shall perform the following actions:

(1) All functions of the RF device shall be enabled, including those functions that had been disabled by connection to the RSM.

(2) An audible alert message, “Failed Accessory,” shall be broadcast at maximum volume.

(3) A visual alert message, “FAIL ACC,” shall appear on the RF device display.

(4) A change to the backlight as specified in 11.16.1 shall occur.

11.11.4

Audible and visual alert messages specified in 11.11.3 shall be canceled when the user completes any one of the actions in 11.11.4.1 through 11.11.4.2.

11.11.4.1

Audible and visual alert messages specified in 11.11.3 shall be canceled when the user completes any one of the following actions on a wireless RSM.

(1) Reinitiating a pairing with or reconnecting to a wireless accessory

(2) Power cycling the RF device

11.11.4.2

Audible and visual alert messages specified in 11.11.3 shall be canceled when the user completes any one of the following actions on a wired RSM:

(1) Power cycling the RF device

(2) Connecting a new or repaired wired accessory

11.12 Failure Detection of Antennas.

11.12.1

The RF device shall detect the failure of the primary antenna within 10 seconds of the failure in hazard zone mode.

11.12.1.1

When a failure as specified in 11.12.1 occurs, at a minimum, the RF device shall perform the following actions:

(1) An audible message, “Failed antenna,” shall be announced at maximum volume.

(2) A visual message, “FAIL ANT,” shall be displayed on all displays.

(3) A change to the backlight as specified in 11.16.1 shall occur.

11.12.1.2

Audible and visual messages specified in 11.12.1.1 shall be canceled when the user completes any of the following actions on the RF device:

(1) Power cycling the RF device

(2) Replacing the antenna

11.13 Voice Announcement.

11.13.1 Language.

11.13.1.1

The RF device shall be equipped with a voice announcement in English.

11.13.1.2

Voice announcements in additional languages shall be permitted.

11.13.2

The voice announcement shall be active by default.

11.13.2.1

Voice announcement shall commence within 500 ms of powering on or switching channels, talkgroups, or talk paths, unless superseded by higher priority voice announcements.

11.13.2.2 Receive Audio.

11.13.2.2.1

Receive audio shall have priority over any voice announcements.

11.13.2.2.2

Receive audio shall override such announcements if they both occur simultaneously.

PCs [1] SR-30 Hide Legisla

11.13.2.2.3

Any overridden voice annunciation shall follow within 5 seconds of detecting the last PTT or received audio.

11.13.2.2.3.1

The RF device shall attempt to repeat overridden announcements a minimum of one time.

11.13.2.2.3.2

The number of attempts to repeat overridden announcements shall be configurable by the AHJ.

11.13.3 Order of Announcement.

SR-68 Hide Legisla

11.13.3.1

In the event of simultaneous events, announcements shall be made according to the following list of precedence:

(1) Zone

(2) Channels, talkgroups, or talk paths

(3) Emergency, as specified in Section 11.8

(4) Failure of primary antenna as specified in Section 11.12

(5) Failure of an RSM as specified in Section 11.11

(6) Out of range, if applicable in accordance with Section 11.14

(7) Self-diagnostic failure as described in Section 11.18

(8) Battery level as specified in 11.1.5

(9) Power off

SR-69 Hide Legisla

11.13.3.2

Context-appropriate prerecorded voice files, user-created or voice synthesis files, or any combination thereof, shall be permitted to be used for any voice announcement, as determined by the AHJ.

11.13.4

Channel, talkgroup, or talk path name announcements shall be required.

11.13.5 Voice Announcement Sound Levels.

PCs [1] SR-32 Hide Legisla

11.13.5.1

Channel, talkgroup, talk path voice announcements, and other preprogrammed voice announcements in the hazard zone mode and when transitioning from the hazard zone mode to the nonhazard zone mode shall be, at minimum 64 dBA, as measured in 11.2.2.1.

11.13.5.1.1

The max-hold function (if available) shall be permitted to be used to hold the maximum value observed by the meter for the specified period of time.

11.14* Out-of-Range Detection.

Where the RF device operates on a system that has an out-of-range capability, the RF device shall detect if it is out-of-range within 1.0 minute.

11.15* Audible and Visible Event Indications.

11.15.1 Out-of-Range Indication.

11.15.1.1

The RF device shall detect if it is in-range and connected to a system, or out-of-range and loss of connection to a system; where applicable to the system type.

SR-73 Hide Legisla

11.15.1.2

The RF device shall display the following indications:

(1) All displays shall be backlit-flashing red when the RF device is out of range.

(2) The RF device shall emit an audible tone every 15 seconds ± 1 second, and the tone shall last 1 second, +0.5/−0 second, at 70 percent of factory set max volume level.

11.15.1.3

The AHJ shall have the ability to program the out of range volume level to no less than 50 percent of factory set max volume.

11.15.1.4

The AHJ shall have the ability to program a hold off time of 0 to 120 seconds to eliminate nuisance warnings.

11.15.1.5

The RF device shall return to normal display, and the sound shall cease when it detects it is no longer out of range and has reestablished connection to the system.

11.16 Visible Event Indications.

See A.11.15.

SR-76 Hide Legisla

11.16.1

The RF device, displays, and capable RSMs shall illuminate as indicated during the following event conditions:

(1) Emergency: indicated by flashing orange when an emergency alarm signal is initiated; indicated by flashing red when an emergency alarm signal is received

(2) Antenna failure: indicated by solid orange as specified in Section 11.12

(3) Connected RSM failure: indicated by solid orange as specified in 11.11.1

(4) Over-temperature: indicated by solid orange as specified in Section 11.17

(5) Out-of-range: indicated by flashing yellow as specified in Section 11.15

(6) Transmit and receive LED: receive, indicated by solid green; transmit, indicated by solid red

(7) Self-check fail: indicated by solid red

SR-76 Hide Legisla

11.16.2

LEDs shall have the following operational states:

(1) ON: LED is continuously illuminated

(2) OFF: LED is not illuminated

(3) FLASHING: LED provides a continuous sequence of On/Off illumination states at a 1 Hz frequency and 50 percent duty cycle.

SR-76 Hide Legisla

11.16.3 Bluetooth.

Continuous blue shall indicate the Bluetooth link is paired and active.

11.16.4

When simultaneous events occur, the indications priority shall be in order as listed in 11.16.1.

11.17 Internal Over-Temperature Event Indications.

11.17.1*

The RF device shall detect an internal over-temperature event.

11.17.1.1

An RSM or compatible device shall be permitted to detect an internal over-temperature event.

11.17.1.2

The over-temperature limit shall be designated by the RF device or compatible device manufacturer.

11.17.2

An over-temperature event shall occur any time internal temperature exceeds the manufacturer's designated temperature for 30 seconds ± 5 seconds.

11.17.3 Detection and Reporting.

11.17.3.1

The RF device shall detect an over-temperature event in both the RF device itself and any RSM that is so equipped to detect an internal over-temperature event.

11.17.3.2

An RSM shall be permitted to report an internal over-temperature event with the internal temperature data command as specified in Table 11.22.1(a) and Table 11.22.1(b).

11.17.4

The over-temperature event shall be displayed as "OVER TMP" on the RF device's primary display as specified in 11.6.1.

11.17.5

The over-temperature event shall be audibly announced "Over Temp" at maximum volume.

11.17.5.1

The over-temperature announcement shall be repeated every 5 minutes ± 15 seconds, regardless of the number of recorded over-temperature events, until reset by the AHJ service shop.

11.17.6

The over-temperature condition shall be recorded in the RF device's memory.

11.17.6.1

The start time of the over-temperature event shall be recorded when the event starts.

11.17.6.2

The end time and maximum temperature of the over-temperature event shall be recorded when the event ends.

11.17.6.3*

Each over-temperature record shall indicate if it occurred in the RF device or a connected capable RSM.

11.17.7 Exposure.

11.17.7.1

If the RF device has been exposed to more than 10 minutes ± 30 seconds of cumulative over-temperature conditions, an audible announcement shall be made that states, "RF DEVICE HAS HAD LONG EXPOSURE TO EXTREME TEMPERATURES."

11.17.7.2

If the capable RSM has been exposed to more than 10 minutes ± 30 seconds of cumulative over-temperature conditions, an audible announcement shall be made that states, "THE OPTIONAL COMPONENT HAS HAD LONG EXPOSURE TO EXTREME TEMPERATURES."

11.18 Device Self-Checks.

11.18.1

The RF device shall perform mandatory self-checks to verify operation when the unit is initially powered up, periodic self-checks while it remains powered up, and periodic self-diagnostics every 5 minutes, at a minimum.

SR-62 Hide Legisla

11.18.1.1

The RF device shall display a visual indication when it has failed the self-check as required in Section 11.16.

11.18.1.2

The RF device shall have a voice annunciation of radio failure if the self-diagnostic tests fail.

PCs [1] SR-33 Hide Legisla

11.18.2

The following functions shall be tested in self-check:

(1)* RSM connectivity to the RF device

(2) Loss of antenna connection to the RF device

(3) Temperature exposure over manufacturer recommended overheat temperature

PCs [1]

11.18.3

Upon connecting an RSM to an RF device that is turned on, the RSM check shall take place automatically and thereafter on the periodic self-checks.

SR-34 Hide Legisla

11.18.4

On power up, the RF device shall voice announce the battery level range consistent with 11.1.5.1:

(1) High

(2) Medium

(3) Low

(4) Critical

11.19 Database Requirements.

11.19.1

The RF device shall contain a database to store information related to operations.

11.19.2

The database shall reside in nonvolatile, nonremovable memory.

11.19.3 ID Storage.

11.19.3.1

The database shall be capable of storing user ID information.

11.19.3.2

The database shall be capable of storing a minimum of 3000 user ID entries.

11.19.3.3

The user ID entry shall include the signaling-specific individual subscriber ID as well as an alias, if available, of at least 14 alphanumeric characters.

11.19.4

The RF device shall be capable of storing a list of user ID entries containing a minimum of the last 20 emergency activations, as specified in 11.8.9.3.

11.19.5

The RF device shall be capable of storing data logs as specified in Section 11.20.

11.20 Data Logging.

11.20.1 Memory.

11.20.1.1

RF devices shall incorporate data logging in nonvolatile memory.

SR-66 Hide Legisla

11.20.1.2

At a minimum, each of the following events shall be identified, recorded, and date and time stamped in coordinated universal time in the data log:

(1) RF device is turned on.

(2) Emergency button is activated.

(3) User input, button press, or switch is activated.

(4) Power source levels are at initial power on and then at 75 percent, 50 percent, 25 percent, 10 percent, and 5 percent capacity.

(5) RF device is turned off.

(6) Channel, talkgroup, talk path, zone, mode, deck, bank, or mission plan is selected.

(7) Internal electronics temperature exceeds or is less than the limit specified by the manufacturer.

(8) RSM failure or disconnection.

(9) Antenna failure or disconnection.

(10) Bluetooth device connected and disconnected, with friendly name.

(11) In/out of range of a system.

(12) Detectable PTT rejection with rejecting channel, talk group, or talk path also logged.

SR-60 Hide Legisla

11.20.2

The data logging information shall be downloadable by the emergency services organization.

11.20.2.1

When the datalog is downloaded, the compliance statement as shown in 10.1.6 or 10.1.7 shall be included.

SR-67 Hide Legisla

11.20.3

The data logging shall have a minimum capacity of logging the 5000 most-recent events.

11.21 RF Wireless Interface (RFWI).

11.21.1

The RF device shall be capable of operating with a wireless RSM using classic Bluetooth® audio.

11.21.1.1

The RF device shall support the Bluetooth® headset profile (HSP).

11.21.1.2

The RF device shall exchange speaker and microphone audio with a wireless RSM via HSP or HFP.

11.21.1.3

The RF device shall be capable of supporting the Bluetooth® serial port profile (SPP).

11.21.1.4

The RF device shall exchange the data command and data response sets specified in Table 11.22.1(a) and Table 11.22.1(b) and Table 11.22.2(a) and Table 11.22.2(b) with a wireless RSM via SPP.

11.21.1.5

The RF device shall be capable of Bluetooth® secure simple pairing using “Just Works” mode.

11.21.1.6

The RF device shall be Bluetooth® certified.

11.21.2

The RF device shall meet the connectivity requirements specified in 11.21.2.1 through 11.21.2.4.

11.21.2.1

The RF device shall remain paired to the last RSM or compatible device.

11.21.2.2

Upon power up, the RF device shall attempt to reconnect to the last paired RSM or compatible device.

11.21.2.3

The RF device shall have a minimum effective range of 1 m (3.3 ft).

11.21.2.4

The RF device shall attempt to restore a lost Bluetooth® connection.

11.21.3

A wireless RSM or compatible device shall be capable of the requirements specified in 11.21.3.1 through 11.21.3.9.

11.21.3.1

A wireless RSM or compatible device shall be Bluetooth® certified.

11.21.3.2

A wireless RSM or compatible device shall support the HSP.

Detail SF

11.21.3.3

Passive electrical circuitry that relies on a supplemental device to energize it shall be exempt from explosion protection if the requirement in 11.21.3.3.1 is met.

11.21.3.3.1

The instructions supplied involving passive electrical circuitry shall indicate that the supplemental device used to energize the circuitry shall not be used or stored in a hazardous location unless certified for such use.

11.21.3.4

A wireless RSM or compatible device shall support the SPP.

11.21.3.5

A wireless RSM or compatible device shall be permitted to support the functionality specified in Section 11.10.

11.21.3.6

Button, LED, and control functionality specified in Section 11.9 shall be supported with the data commands and responses specified in Table 11.22.1(a) and Table 11.22.1(b) and Table 11.22.2(a) and Table 11.22.2(b) over SPP.

11.21.3.7 Failure Detection.

11.21.3.7.1

If capable, upon detecting failure of any minimum operational requirements outlined in Section 11.9, a wireless compatible device shall intentionally end the wireless link to an RF device without notice.

11.21.3.7.2

Such action shall generate the RF device failure response of Section 11.11.

11.21.3.8

A wireless RSM or compatible device shall be permitted to report an internal over-temperature event with the data command specified in Table 11.22.1(a) and Table 11.22.1(b) over SPP.

11.21.3.9

A wireless RSM or compatible device shall be permitted to indicate to the RF device an intentional power-off procedure has been activated with the closing connection data command specified in Table 11.22.1(a) and Table 11.22.1(b) over SPP.

11.21.4

An RF device shall be permitted to connect with more than one Bluetooth® RSM or compatible device at a time.

11.21.5

A wireless RSM or compatible device shall be permitted to stand alone or be integrated into other equipment.

11.22 Data Commands.

11.22.1

The RF device shall support the data command set specified in Table 11.22.1(a) and Table 11.22.1(b).

Table 11.22.1(a) Data Response Set Requirements

Command	Format	ACK Required	Notes
PTT - Press	+PTT=P	No	PTT button pressed
			RSM -> RF device
+PTT=P received	+PTT=P<cr><lf>OK	No	+PTT=P received
			RF device -> RSM
PTT - Release	+PTT=R	No	PTT button released
			RSM -> RF device
+PTT=R received	+PTT=R<cr><lf>OK	No	+PTT=R received
			RF device -> RSM
EAB - Press	+EMER=P	No	EAB pressed
			RSM -> RF device
+EMER=P received	+EMER=P<cr><lf>OK	No	+EMER=P received
			RF device -> RSM
EAB - Release	+EMER=R	No	EAB released
			RSM -> RF device
+EMER=R received	+EMER=R<cr><lf>OK	No	+EMER=R received
			RF device -> RSM
Radio Volume	+VGM=#0–15	Yes	
	+VGS=#0–15		
Closing Connection	+ CLOSE	Yes	Wireless RSM intentionally closing connection – not an error or lost link
LED Control*	+LED:0xid:0xstate:0xRRGGBB	Yes	ID: 8 bit representation of LED.
			State: 8 bit representation of LED behavior.
			Color: 24 bit RGB representation of color.
Programmable Button - Press	+BTN1=P	No	Programmable button pressed
			RSM -> RF device
+BTN1=P received	+BTN1=P<cr><lf>OK	No	+BTN1=P received
			RF device -> RSM
Programmable Button - Release	+BTN1=R	No	Programmable button released
			RSM -> RF device
+BTN1=R received	+BTN1=R<cr><lf>OK	No	+BTN1=R received
			RF device -> RSM
Internal Temperature	+TEMP=[NNN]	Yes	Temperature in degrees Fahrenheit

Table 11.22.1(b) Data Response Set Requirements — ACK and NACK Commands

Command	Format	Notes
ACK	<cr><lf>OK<cr><lf>	Command received successfully
NACK	<cr><lf>ERROR<cr><lf>	Error with command

11.22.2

A wired or wireless RSM shall be permitted to support the data command set specified in Table 11.22.2(a) and Table 11.22.2(b).

Table 11.22.2(a) LED Command ID Value Table

ID	Indicator Type	Comments
0	Emergency	
1	Compatible device failure	
2	Over temperature	
3	Out of range	
4	TX/RX	
5	Bluetooth® pairing	
6 and greater	Reserved	

Table 11.22.2(b) LED Command State Value Table

State	LED Behavior	Comments
0	OFF	
1	Steady ON	
2	Flashing	
3 and greater	Reserved	

11.23* Hazardous Location Requirements.

11.23.1* General.

RF devices and RSMs, including the RFDC used for connection to other compatible devices, shall meet the requirements of this standard for one of the following types of explosion protection:

(1) Nonincendive equipment, electrically interconnected type (i.e., individual pieces of equipment separately certified for Class I and II, Division 2 and Class III applications, with external electrical interconnection means involving plugs and jacks, and intended for electrical interconnection to other separately certified nonincendive equipment, electrically interconnected types)

(2) Intrinsically safe system (i.e., multiple pieces of intrinsically safe apparatus certified together for Class I and II, Division 1 and Class III applications, with electrical interconnection means, and intended for dedicated system use)

See SR

PCs [1] SR-18 Hide Legisl

11.23.2 Nonincendive Equipment, Electrically Interconnected Types.

RF devices and RSMs shall, at a minimum, be suitable for use in Class I, Division 2, Groups C and D; Class II, Division 2, Groups F and G; and Class III, Divisions 1 and 2 hazardous (classified) locations, with a temperature class within the range of T3 through T6 inclusive in accordance with UL 121201, *Nonincendive Electrical Equipment for Use in Class I and II, Division 2 and Class III, Divisions 1 and 2 Hazardous (Classified) Locations*.

PCs [1] SR-19 Hide Legisl

11.23.2.1 Interconnection of Nonincendive Equipment, Electrically Interconnected Types.

11.23.2.1.1

Interconnection of separately certified nonincendive equipment, electrically interconnected types, shall be by means of a plug and jack that comply with the RFDC requirements as specified in Section 11.10.

11.23.2.1.2

The electrical parameters for this interconnection shall be in accordance with Table 11.23.2.1.2.

Table 11.23.2.1.2 Electrical Parameters for Interconnection of Nonincendive Equipment, Electrically Interconnected Types

RFDC as source	Required relationship	RFDC as sink
Uo ≤ 8 V	Uo ≤ Ui	Ui ≥ 10 V
Io ≤ 500 mA	Io ≤ Ii	Ii ≥ 1 A
Co ≥ 69 µF	Co ≥ Ci + Ccable*	Ci ≤ 68 µF
Lo ≥ 320 µH	Lo ≥ Li + Lcable*	Li ≤ 315 µH

* Assumption for cable capacitance (Ccable) and cable inductance (Lcable): 200 pF/m and 1 µH/m.

11.23.3 Intrinsically Safe Systems.

11.23.3.1

RF devices and RSMs shall be permitted to be certified for use in Class I, Division 1, Groups C and D; Class II, Division 1, Groups E, F, and G; and Class III, Divisions 1 and 2 hazardous (classified) locations, and with a temperature class within the range of T3 through T6 inclusive in accordance with TIA-4950-A or TIA-4950-B, *Requirements for Battery-Powered, Portable Land Mobile Radio Applications in Class I, II, and III, Division 1, Hazardous (Classified) Locations*, 2014 or 2020, respectively, or UL 913, *Intrinsically Safe Apparatus and Associated Apparatus for Use in Class I, II, III, Division 1, Hazardous (Classified) Locations*.

11.23.3.2 Interconnection of Intrinsically Safe Systems.

RF devices and RSMs that are certified as part of an intrinsically safe system shall only be interconnected with compatible devices also certified as part of the same intrinsically safe system.

Chapter 12 Portable RF Voice Communication

Devices Performance Requirements (NFPA 1802)

12.1 RF Device, RSM, and RF Subscriber Ensemble Requirements.

12.1.1

The radio frequency (RF) device, remote speaker microphone (RSM), and RF subscriber ensemble shall be tested for speech quality in the analog mode as specified in Section 13.2.

12.1.1.1

If equipped with digital mode, the RF device shall be tested in the analog mode in addition to any digital modes as specified in Section 13.2.

12.1.1.2*

The RF device, RSM, and RF subscriber ensemble shall have a minimum speech quality result of 2.5.

12.1.2 Display Surface.

12.1.2.1

RF device, RSM, and RF subscriber ensemble display surfaces shall be tested for abrasion resistance as specified in Section 13.7.

12.1.2.2

RF device, RSM, and RF subscriber ensemble display surfaces shall not exhibit an average delta haze greater than 14 percent.

12.1.3 Vibration Resistance.

12.1.3.1

The RF device, RSM, and RF subscriber ensemble shall be tested for resistance to vibration as specified in Section 13.4.

12.1.3.2

The RF device, RSM, and RF subscriber ensemble shall have a minimum speech quality result of 2.5.

12.1.3.3

The RF device shall be evaluated for functioning of data logging as specified in Section 11.20.

12.1.4 Heat and Immersion Leakage.

12.1.4.1

The RF device, RSM, and RF subscriber ensemble shall be tested for heat and immersion leakage resistance as specified in Section 13.3.

12.1.4.2

The RF device, RSM, and RF subscriber ensemble shall have no water leakage inside the electronics compartment(s) and the power source compartment(s).

12.1.4.3

The RF device, RSM, and RF subscriber ensemble shall have a speech quality result of 2.5.

12.1.4.4

The RF device shall be evaluated for proper functioning of data logging as specified in Section 11.20.

12.1.5 High-Temperature Functionality.

12.1.5.1

The RF device, RSM, and RF subscriber ensemble shall be tested for resistance to heat as specified in Section 13.8.

12.1.5.2

The RF device, RSM, and RF subscriber ensemble shall not melt, drip, or ignite.

12.1.5.3

The RF device, RSM, and RF subscriber ensemble shall have a minimum speech quality result of 2.5.

12.1.5.4

The RF device shall be evaluated for functionality of data logging as specified in Section 11.20.

12.1.6 Ingress Protection.

12.1.6.1

The RF device, RSM, and RF subscriber ensemble shall be tested for ingress protection (IP) rating as specified in IEC 60529, *Degrees of protection provided by enclosures (IP Code).*

12.1.6.2

The RF device, RSM, and RF subscriber ensemble shall have a rating of IP6X.

12.1.7 Impact Resistance.

12.1.7.1

The RF device, RSM, and RF subscriber ensemble shall be tested for resistance to impact as specified in Section 13.5.

PCs [1]

12.1.7.2

The RF device, RSM, and RF subscriber ensemble shall have a minimum speech quality result of 2.5.

SR-40 Hide Legisl

12.1.7.3

The RF device, RSM, and RF subscriber ensemble shall not incur damage that affects the normal operation or enclosure integrity.

12.1.7.4

The RF device shall be evaluated for functionality of data logging as specified in Section 11.20.

12.1.8 Corrosion Resistance.

12.1.8.1

The RF device, RSM, and RF subscriber ensemble shall be tested for resistance to corrosion as specified in Section 13.6.

12.1.8.2

The RF device, RSM, and RF subscriber ensemble shall have a minimum speech quality result of 2.5.

12.1.9 Integrity.

12.1.9.1

The RF device, RSM, and RF subscriber ensemble shall be tested for integrity as specified in Section 13.12.

12.1.9.2

The RF device, RSM, and RF subscriber ensemble shall have no case, housing, or closure damage.

12.1.9.3

The RF device, RSM, and RF subscriber ensemble shall have a minimum speech quality result of 2.5.

12.1.9.4

The RF device shall be evaluated for functionality of data logging as specified in Section 11.20.

12.1.10 Cable Pullout.

12.1.10.1

The RF device, RSM, and RF subscriber ensemble shall be tested for cable pullout as specified in Section 13.11.

12.1.10.2

The RF device, RSM, and RF subscriber ensemble shall have a minimum value of 156 N +9/−0 N (35 lbf +2/−0 lbf) in the direction of the wiring.

12.1.10.3

Separation of interconnecting wiring of any specimen shall constitute failing performance.

12.1.11 Heat and Flame Resistance.

12.1.11.1

The RF device, RSM, and RF subscriber ensemble shall be tested for resistance to heat and flame as specified in Section 13.9.

12.1.11.2

The RF device, RSM, and RF subscriber ensemble shall not have the afterflame exceed 2.2 seconds.

12.1.11.3

The RF device, RSM, and RF subscriber ensemble shall have nothing fall off.

12.1.11.4

The RF device, RSM, and RF subscriber ensemble shall not fall from their mounted position.

12.1.11.5

The RF device, RSM, and RF subscriber ensemble shall function as follows:

(1) The RF devices and RSMs shall be activated using the power/volume knob as specified in Section 11.4.

(2) The selector knob shall function as specified in Section 11.5.

(3) The emergency button shall function as specified in Section 11.9.

(4) The display shall function as specified in Section 11.6.

(5) The remote mic audio connection shall function as specified in Section 11.10.

12.1.11.6

The RF device shall be evaluated for proper functioning of data logging as specified in Section 11.20.

12.1.12 Durability and Legibility.

12.1.12.1

The RF device, RSM, and RF subscriber ensemble shall be tested for durability and legibility as specified in Section 13.10.

12.1.12.2

Product labels shall remain attached to the RF devices and RSMs.

12.1.12.3

Product labels shall be able to be read by the untrained eye for the following exposures:

(1) Corrosion

(2) High-temperature functionality

(3) Durability

12.1.13 Water Drainage.

PCs [1]

12.1.13.1

The RF device, RSM, and RF subscriber ensemble shall be tested for water drainage as specified in Section 13.13.

SR-41 Hide Legisla

12.1.13.2

The RF device, RSM, and RF subscriber ensemble shall have a minimum speech quality result of 2.5.

12.1.13.3

The RF device shall be evaluated for functionality of data logging as specified in Section 11.20.

12.1.14 Electronic Temperature Stress.

12.1.14.1

The RF device, RSM, and RF subscriber ensemble shall be tested for resistance to electronic temperature stress as specified in Section 13.19.

12.1.14.2

The RF device shall receive and display the user ID of another RF device in the analog mode.

12.1.14.3

The RF device shall transmit its user ID to another RF device in the analog mode.

12.1.15 Tumble-Vibration Resistance.

12.1.15.1

The RF device, RSM, and RF subscriber ensemble shall be tested for resistance to vibration as specified in Section 13.14.

12.1.15.2

The RF device, RSM, and RF subscriber ensemble shall have a minimum speech quality result of 2.5.

12.1.15.3

The RF device shall be evaluated for functioning of data logging as specified in Section 11.20.

Detail SR

Detail SR

12.2 Power Source Performance.

12.2.1

The RF device and RF subscriber ensemble shall be tested for continuous operation as specified in Section 13.18.

12.2.1.1

The RF device and RF subscriber ensemble shall be capable of continuous operation for at least 8 hours on a standard-duty cycle of 10-10-80 at the RF device's maximum allowable transmit power for the band of operation.

12.2.1.2

Transmit power shall not decrease by more than 1 dB for the first 8 hours.

SR-50 Hide Legisla

12.3 RF Device Requirements.

12.3.1

The RF device shall be tested according to Section 13.15 and meet the requirements for carrier output power 2.2.1 (analog) as specified in TIA-603-E, *Land Mobile FM or PM — Communications Equipment — Measurement and Performance* .

12.3.2*

The RF device shall be tested according to Section 13.17 and meet the Class A requirements for reference sensitivity 2.1.4 (analog) as specified in TIA-603-E, *Land Mobile FM or PM — Communications Equipment — Measurement and Performance Standards*.

12.3.3

The RF device shall be tested according to Section 13.16 and meet the requirements for carrier frequency stability 2.2.2 (analog) as specified in TIA-603-E, *Land Mobile FM or PM — Communications Equipment — Measurement and Performance Standards*.

12.4 RF Antenna Requirements.

12.4.1

The RF antenna shall be tested in accordance with Section 13.20.

12.4.2

The RF antenna shall exhibit a voltage standing wave ratio (VSWR) that is less than or equal to the manufacturer's design specification for maximum VSWR as tested with its test fixture.

Devices Test Methods (NFPA 1802)

13.1 Sample Preparation.

13.1.1 Application.

13.1.1.1

The sample preparation procedures contained in 13.1.2 through 13.1.4 shall apply to each test method in this chapter, as specifically referenced in each test method.

13.1.1.2

The device's battery shall be fully charged before each test as well as before the 10-10-80 duty cycle in 12.2.1.1.

13.1.1.3

Only the specific sample preparation procedure(s) referenced in each test method shall be applied to that test method.

13.1.1.4

Samples shall be complete devices.

13.1.1.5

Specimens for testing shall be complete devices.

13.1.1.6

A minimum of three specimens shall be tested.

13.1.1.7

Specimens shall be set as follows:

(1) Volume shall be set to maximum or as specified by the manufacturer.

(2)* FM modulation shall be set to analog.

(3) Channel bandwidth shall be set as follows:

  (a) VHF/UHF/700 — 12.5 kHz (narrowband)

  (b) 800 band non-NPSPAC channels — 12.5 kHz (narrowband)

  (c) 800 band NPSPAC channels — 12.5 kHz (narrowband)

(4) Transmit power shall be set to maximum or as specified by the manufacturer.

(5) Hazard zone mode shall be enabled.

13.1.2 Room Temperature Conditioning Procedure.

13.1.2.1

Specimens shall be conditioned at a temperature of 22°C ±3°C (72°F ± 5°F) and relative humidity (RH) of 50 percent ±25 percent for at least 4 hours.

13.1.2.2

Testing shall begin within 5 minutes of the specimens being removed from the conditioning.

13.1.3 Cold Temperature Conditioning Procedure.

13.1.3.1

Specimens shall be exposed to a temperature of −20°C, +0/−3°C (−4°F, +0/−5°F) for at least 4 hours.

13.1.3.2

Testing shall begin within 30 seconds of the specimens being removed from the conditioning.

13.1.4 Elevated Temperature Conditioning Procedure.

13.1.4.1

Specimens shall be exposed to a temperature of 71°C, +1/−0°C (160°F, +2/−0°F) for at least 4 hours.

13.1.4.2

Testing shall begin within 30 seconds of the specimens being removed from the conditioning.

13.2 Speech Quality Test.

13.2.1 Apparatus.

13.2.1.1 Testing Chamber.

Testing shall be conducted in a chamber having the following characteristics, at a minimum:

(1) Ambient noise level inside the chamber shall be at least NC-25.

(2) Walls and ceiling shall be ≥90 percent absorptive for equal to or less than 200 Hz.

(3) Clearance from test specimens shall be ≥1 m (≥3.3 ft).

13.2.1.2 Acoustic Treatment.

All room surfaces above the floor shall be acoustically treated for internal acoustic absorption as well as for external noise mitigation.

13.2.1.3 Simulator.

A G.R.A.S. KEMAR head and torso simulator (HATS), type 45BM or equivalent, shall be used for testing.

13.2.1.3.1 Tone.

13.2.1.3.1.1

The mouth simulator shall be capable of producing 1 kHz sine tone at a sound pressure level of 112 dBA as measured at 25 mm (1 in.) with the mouth reference point un-equalized.

13.2.1.3.1.2

The total harmonic distortion (THD) shall be ≤3 percent.

13.2.1.3.2 Frequency.

13.2.1.3.2.1

The mouth simulator frequency response shall be able to be equalized flat ±1 dB between 100 Hz and 10 kHz.

13.2.1.3.2.2

The response shall be –15 dB or less at 100 Hz and –20 dB or less at 15 kHz.

13.2.1.4 Sound Pressure Level (SPL) Meter.

The SPL meter having the following characteristics shall be used:

(1) The SPL meter shall be capable of measuring an equivalent continuous sound pressure level (L_{eq}) using an A-weighted filter.

(2) The SPL meter shall have a dynamic range from 30 dBA (or less) to 130 dBA (or greater).

(3) The SPL meter shall display the measurement to at least 0.1 dBA.

13.2.1.5 Pink Noise Generator.

A pink noise analog audio signal generator shall be used.

13.2.1.5.1

The pink noise analog audio signal generator shall be capable of generating pink noise and sine waves from –80 dBu to –2 dBu in one-dBu steps, with a THD+N of –90 dB (0.0032 percent) at 8 dBu noise floor type 25 μv.

13.2.1.5.2

The pink noise analog audio signal generator shall have the following characteristics:

(1) A frequency range of 10 Hz to 20 kHz adjustable in one-digit steps resolution ±0.01 percent

(2) An amplitude accuracy of ±0.5 dB or less

13.2.1.6 Digital Equalizer.

13.2.1.6.1

A digital equalizer shall be used.

13.2.1.6.2

The digital equalizer shall be capable of equalizing the frequency response of the HATS mannequin within ±1 dB flat between 100 Hz and 10 kHz.

13.2.1.7 Microphone.

A microphone having the following characteristics shall be used:

(1) The microphone shall be a condenser type.

(2) The microphone polar pattern shall be omnidirectional.

(3) The frequency response shall be flat ±0.5 dB from 100 Hz to 15 kHz.

(4) The residual noise shall be ≤–30 dB.

(5) The microphone shall accept signals of at least 130 dBA.

13.2.1.8* Speech Quality Analyzer.

The speech quality analyzer shall have the following characteristics:

(1) Measures perceptual objective listening quality according to ITU-T P.863, *Perceptual Objective Listening Quality Assessment*, in narrowband operation

(2) Samples 16-bit linear audio input signal at 8 kHz or 16 kHz

(3) Handles voice files from 6 to 20 seconds in length

(4) Represents measurement result as the POLQA MOS value

13.2.1.9 Radio Test Set/Service Monitor.

An Aeroflex 3920 or equivalent radio test set/service monitor having the following characteristics shall be used:

(1) The radio test set/service monitor shall be capable of receiving and transmitting analog FM and P25 signals.

(2) The radio test set/service monitor shall operate over the frequency range of devices under test.

(3) The radio test set/service monitor shall be P25 phase 1 and phase 2 compatible.

13.2.1.10 Artificial Mouth.

The artificial mouth shall be calibrated as follows *(see Figure 13.2.1.10)*:

(1) The pink noise test signal from the HATS shall be equalized flat with pink noise from 100 Hz to 10 kHz to ±1dB on a ⅓ octave scale and adjusted to achieve an A-weighted sound level of 97 dBA ±0.5 dB at the mouth reference point (MRP), 50 mm ±3 mm (2 in. ±⅛ in.) from the HATS' mouth, or an inverse sine sweep from 100 Hz to 10 kHz to equalize the mouth shall be allowed.

(2) The levels for the 125 Hz octave band (the 100 Hz, 125 Hz, 160 Hz ⅓ octave bands) shall be reduced by 10 dB.

(3) The levels for the 250 Hz octave band (the 200 Hz, 250 Hz, 315 Hz ⅓ octave bands) shall be reduced by 2 dB.

(4) The speech quality test signal "Male1_1st_LMR.wav" shall be applied and the SPL adjusted until an average (SPL) (Leq) of 95 dBA ±0.5 dBA is achieved, over a period of time of 45 seconds ±15 seconds.

Figure 13.2.1.10 Calibration of the Artificial Mouth.

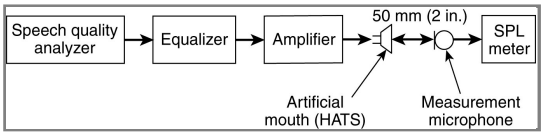

13.2.1.11 Artificial Ear.

The artificial ear shall be calibrated as follows *(see Figure 13.2.1.11)*:

(1) The microphone calibrator shall be applied to the artificial ear and set to the level specified by the manufacturer.

(2) The audio analyzer shall be calibrated according to the calibration procedure specified by the audio analyzer manufacturer.

Figure 13.2.1.11 Calibration of the Artificial Ear.

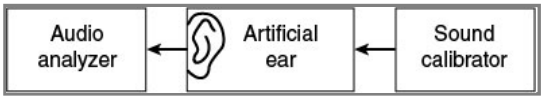

SR-35 Hide Legisla

13.2.1.12 Excitation Speech Signals.

13.2.1.12.1*

Four excitation speech signals, two male and two female, shall be selected by the audio analyzer as follows:

(1) Male1_1st_Set_8k.wav

(2) Male2_1st Set_8k.wav

(3) Female1_1st_Set_8k.wav

(4) Female2_1st_Set_8k.wav

13.2.1.12.2*

The following modifications shall be applied to each of the four excitation speech signals:

(1) Each file shall be high-pass filtered with a 9th order Butterworth filter with a –3 dB point of 300 Hz.

(2) Following filtering, each file shall be scaled to provide an active speech level (ASL) of –26 dBov according to ITU-T Recommendation P.56.

(3) The file names shall be revised from "…Set_8k.wav" to "…LMR.wav" to reflect that these modifications have been applied.

PCs [1]

13.2.1.13 Speech Quality Measurement Setup.

13.2.1.13.1

The speech quality measurement shall be activated in the audio analyzer.

PCs [1] SR-37 Hide Legisla

13.2.1.13.2

Each speech quality measurement shall be recorded for each test signal as follows:

(1) Four excitation speech signals, two male and two female, as defined in 13.2.1.13, shall be selected as follows:

(a) Male1_1st_LMR.wav

(b) Male2_1st_LMR.wav

(c) Female1_1st_LMR.wav

(d) Female2_1st_LMR.wav

(2) The mode in the RF device and speech quality analyzer shall be narrowband.

(3) When using narrowband, automatic gain control in the DUT shall be disabled and level alignment enabled in the speech quality analyzer, in accordance with Sub-section 83 of ITU P.863.

(4) The four speech quality readings shall be calculated and reported.

13.2.1.14 RF Device RFDC Transmit Audio Speech Quality Test.

The RF device RFDC transmit audio speech quality test shall be conducted in accordance with the following procedure *(see Figure 13.2.1.14)*:

(1) The radio test set/service monitor shall have deemphasis enabled, IF bandwidth of 12.5 kHz, and audio band pass filter of 300 Hz to 3.0 kHz.

(2) For wired connection, the audio signal from the speech quality test set shall be fed to the transmitting specimen via the RFDC at a level as specified by the manufacturer.

(3)* The audio signal from the radio test set/service monitor to the speech quality test shall be adjusted to achieve a 0.0 dBu nominal level.

(4) The RF signal between the RF device test set and the device under test (DUT) shall be directly connected (i.e., wired).

(5) The measurement shall be started and the speech quality reading measured and reported.

Figure 13.2.1.14 Measurement Setup for RF Device RFDC Transmit Audio Speech Quality Test.

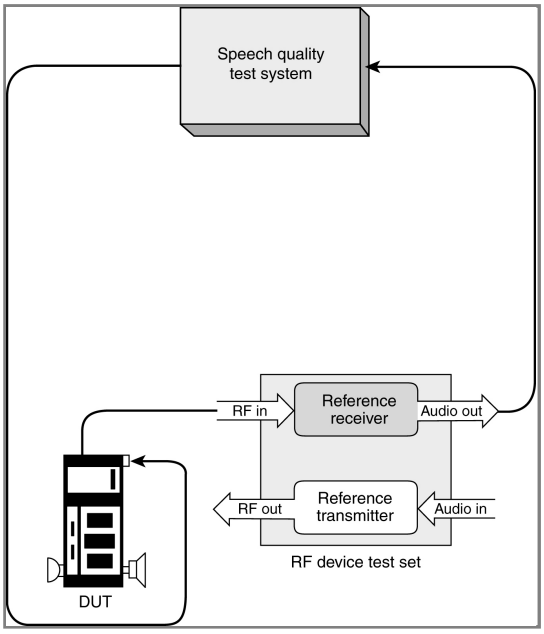

13.2.1.15 RF Device Bluetooth® Transmit Audio Speech Quality Test.

The RF device Bluetooth® transmit audio speech quality test shall be conducted in accordance with the following procedure *(see Figure 13.2.1.15)*:

(1) The radio test set/service monitor shall have de-emphasis enabled, IF bandwidth of 12.5 kHz, and audio band pass filter of 300 Hz to 3.0 kHz.

(2) The audio signal from the speech quality test set shall be fed to the transmitting specimen via Bluetooth® as specified by the manufacturer.

(3)* The audio signal from the radio test set/service monitor to the speech quality test shall be adjusted to achieve a 0.0 dBu nominal level.

(4) The RF signal between the RF device test set and the device under test (DUT) shall be directly connected (i.e., wired).

(5) The measurement shall be started and the speech quality reading measured and reported.

Figure 13.2.1.15 Measurement Setup for RF Device Bluetooth® Transmit Audio Speech Quality Test.

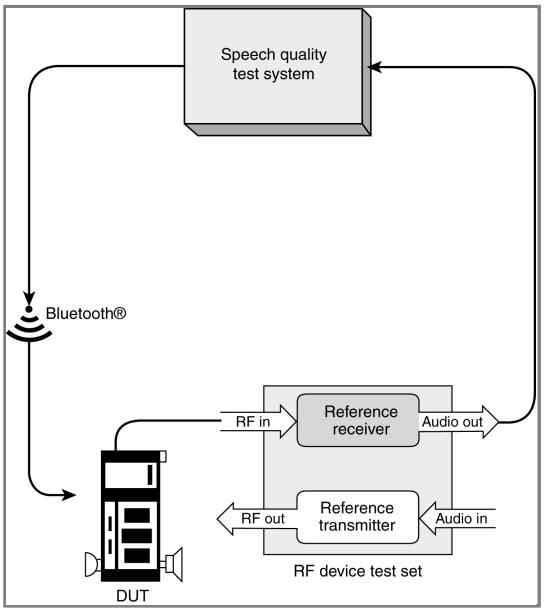

13.2.1.16 RF Device Internal Microphone Transmit Audio Speech Quality Test.

The RF device internal microphone transmit audio speech quality test shall be conducted in accordance with the following procedure *(see Figure 13.2.1.16)*:

(1) The RF device shall be set in accordance with the following procedure:

(a) The RF device shall be mounted in front of the artificial mouth via the manufacturer-provided fixture.

(b) The RF device internal microphone shall be centered to the artificial mouth at a horizontal axis distance of 50 mm ±5 mm (2 in. ±0.2 in.).

(2) The radio test set/service monitor shall have de-emphasis enabled, IF bandwidth of 12.5 kHz, and audio band pass filter of 300 Hz to 3.0 kHz.

(3) The audio signal shall be adjusted from the radio test set/service monitor to the speech quality test set for 0.0 dBu nominal.

(4) The audio signal from the speech quality test set shall be fed to the transmitting specimen via the calibrated mouth.

(5) The RF signal between the RF device test set and the DUT shall be directly connected (i.e., wired).

(6) The measurement shall be started and the speech quality result reading reported.

Figure 13.2.1.16 Measurement Setup for RF Device Internal Mic Transmit Audio Speech Quality Test.

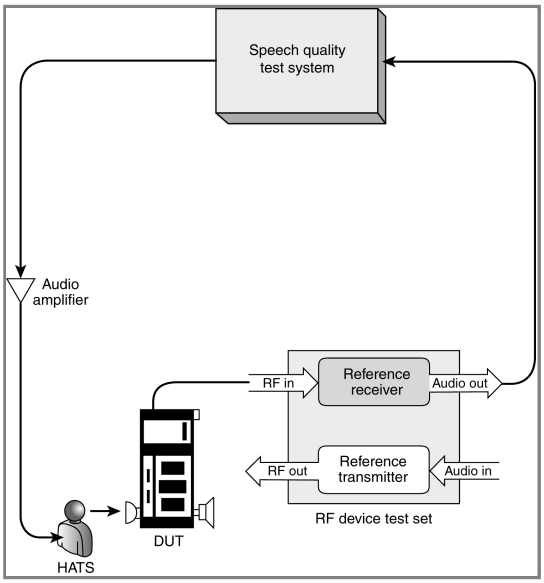

13.2.1.17 RF Device RFDC Receive Audio Speech Quality Test.

The RF device RFDC receive audio speech quality test shall be conducted in accordance with the following procedure *(see Figure 13.2.1.17)*:

(1) The volume of the RF device shall be set to the maximum rated audio as specified by the manufacturer.

(2) The audio output shall be scaled and ground referenced for the speech quality test system to achieve the best mean opinion score (MOS).

(3) The RF device test set/service monitor shall have preemphasis enabled and transmit power set to a level that provides a power level measured at the device under test (DUT) of −60 dBm ±3 dBm.

(4) The audio levels shall be adjusted and recorded from the speech quality test system until the FM peak modulation is between 2.0 kHz and 2.2 kHz from the service monitor using the “Male1_1st_LMR.wav” file and used throughout each individual test method.

(5) The RF signal between the RF device test set and the DUT shall be directly connected (i.e., wired).

(6) The drum reference point (DRP) to field-free transfer function shall be applied to receive testing using HATS' artificial ear.

(7) All alert tones shall be turned off for speech quality testing.

(8) The measurement shall be started and the speech quality result measured and reported.

Figure 13.2.1.17 Measurement Setup for RF Device RFDC Receive Audio Speech Quality Test.

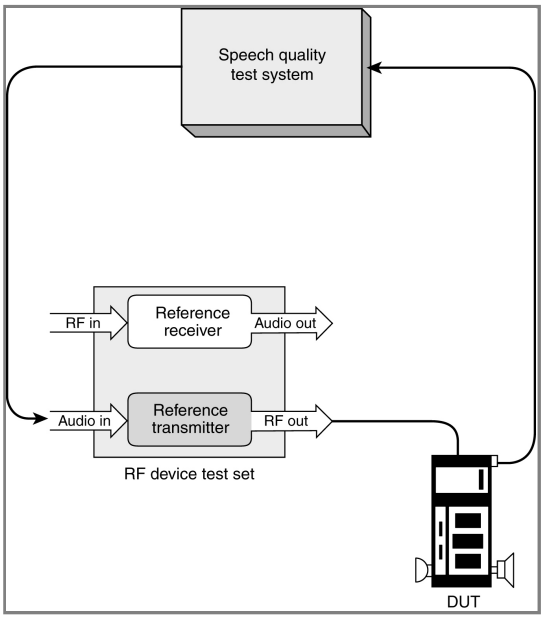

13.2.1.18 RF Device Bluetooth® Receive Audio Speech Quality Test.

The RF device Bluetooth® receive audio speech quality test shall be conducted in accordance with the following procedure *(see Figure 13.2.1.18)*:

(1) The volume of the RF device shall be set to the maximum rated audio as specified by the manufacturer.

(2) The audio output shall be scaled and ground referenced for the speech quality test system to achieve the best MOS.

(3) The RF device test set/service monitor shall have preemphasis enabled and transmit power set to a level that provides a power level measured at the device under test (DUT) of −60 dBm ±3 dBm.

(4) The audio levels shall be adjusted and recorded from the speech quality test system until the FM peak modulation is between 2.0 kHz and 2.2 kHz from the service monitor using the “Male1_1st_LMR.wav” file and used throughout each individual test method.

(5) The RF signal between the RF device test set and the DUT shall be directly connected (i.e., wired).

(6) The measurement shall be started and the speech quality result measured and reported.

Figure 13.2.1.18 Measurement Setup for RF Device Bluetooth® Receive Audio Speech Quality Test.

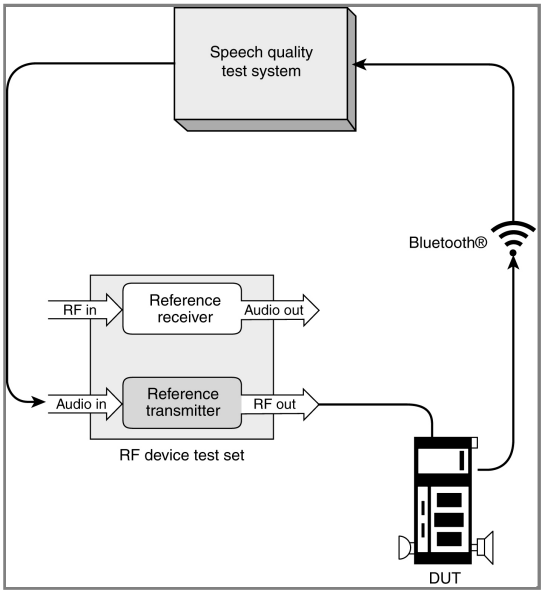

13.2.1.19 RF Device Speaker Receive Audio Speech Quality Test.

The RF device speaker receive audio speech quality test shall be conducted in accordance with the following procedure *(see Figure 13.2.1.19)*:

(1) The receiving RF device speaker shall be set in accordance with the following procedure:

(a) The receiving RF device speaker shall be mounted in front of the artificial ear via the manufacturer-provided fixture.

(b) The RF device speaker shall be centered to the artificial ear at a horizontal distance of 50 mm ±5 mm (2 in. ±0.2 in.).

(2) The volume of the RF device shall be set to the maximum rated audio as specified by the manufacturer.

(3) The RF device test set/service monitor shall have preemphasis enabled and transmit power set to a level that provides a power level measured at the device under test (DUT) of –60 dBm ±3 dBm.

(4) The audio levels shall be adjusted and recorded from the speech quality test system until the FM peak modulation is between 2.0 kHz and 2.2 kHz from the radio test set/service monitor using the “Male1_1st_LMR.wav” file and used throughout each individual test method.

(5) The input sensitivity of the speech quality analyzer shall be set to the level of the artificial ear calibration *(see 13.2.1.11)*.

(6) The RF signal between the RF device test set and the DUT shall be directly connected (i.e., wired).

(7) The measurement shall be started and the speech quality result reading reported.

Figure 13.2.1.19 Measurement Setup for RF Device Speaker Receive Audio Speech Quality Test.

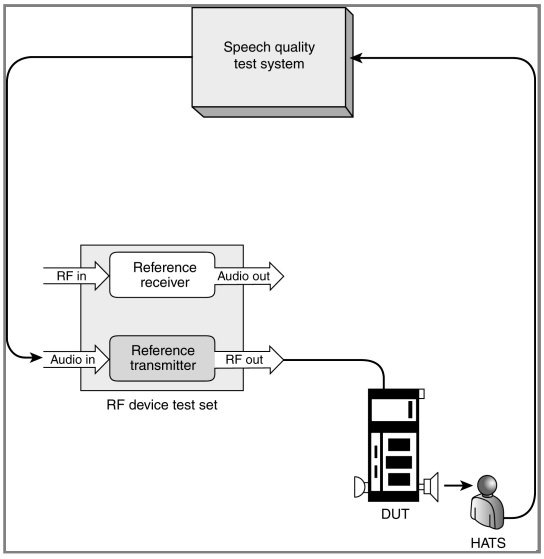

13.2.1.20 Wired RSM Audio Speech Quality Test.

The wired RSM audio speech quality test shall be conducted in accordance with the following procedure *(see Figure 13.2.1.20)*:

(1) The RSM shall be set in accordance with the following procedure:

  (a) The RSM shall be mounted in front of the artificial mouth via the manufacturer-provided fixture.

  (b) The wired RSM shall be centered to the artificial mouth at a horizontal axis distance of 50 mm ±5 mm (2 in. ±0.2 in.).

(2) The audio signal from the speech quality test set shall be fed to the RSM specimen via the calibrated mouth.

(3) The RSM shall be biased as specified by the manufacturer.

(4) The input level of the speech quality test shall be set to accommodate the audio level from the speaker microphone.

(5) The measurement shall be started and the speech quality result reading reported.

Figure 13.2.1.20 Measurement Setup for Wired RSM Audio Speech Quality Test.

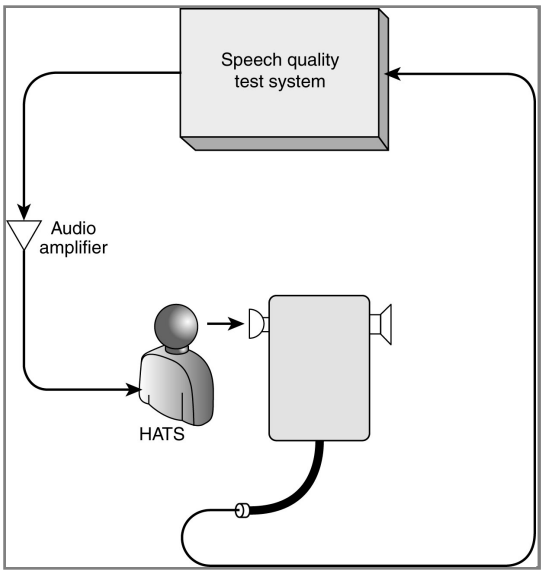

13.2.1.21 Wireless RSM Audio Speech Quality Test.

The wireless RSM audio speech quality test shall be conducted in accordance with the following procedure *(see Figure 13.2.1.21)*:

(1) The RSM shall be set in accordance with the following procedure:

(a) The RSM shall be mounted in front of the artificial mouth via the manufacturer-provided fixture.

(b) The wireless RSM shall be centered to the artificial mouth at a horizontal axis distance of 50 mm ±5 mm (2 in. ±0.2 in.).

(2) The audio signal from the speech quality test set shall be fed to the RSM specimen via the calibrated mouth.

(3) The measurement shall be started and the speech quality result reading reported.

Figure 13.2.1.21 Measurement Setup for Wireless RSM Audio Speech Quality Test.

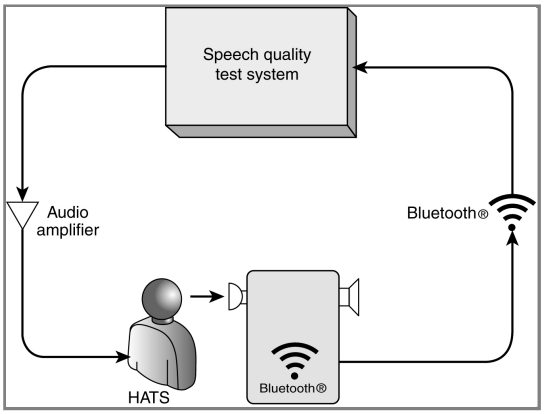

13.2.1.22 Wired RSM Speaker Audio Speech Quality Test.

The wired RSM speaker audio speech quality test shall be conducted according to the following procedure *(see Figure 13.2.1.22)*:

(1) The RSM shall be set according to the following procedure:

(a) The RSM shall be mounted in front of the artificial ear via the manufacture-provided fixture.

(b) The wired RSM speaker shall be centered to the artificial ear at a horizontal distance of 50 mm ±5 mm (2 in. ±0.2 in.).

(2) The output level of the speech quality test shall be set to provide a 2.8 VRMS nominal signal to the speaker microphone.

(3) The input sensitivity of the speech quality analyzer shall be set to the level of the artificial ear calibration *(see 13.2.1.11)*.

(4) The measurement shall be started and the speech quality result reading reported.

Figure 13.2.1.22 Measurement Setup for Wired RSM Speaker Audio Speech Quality Test.

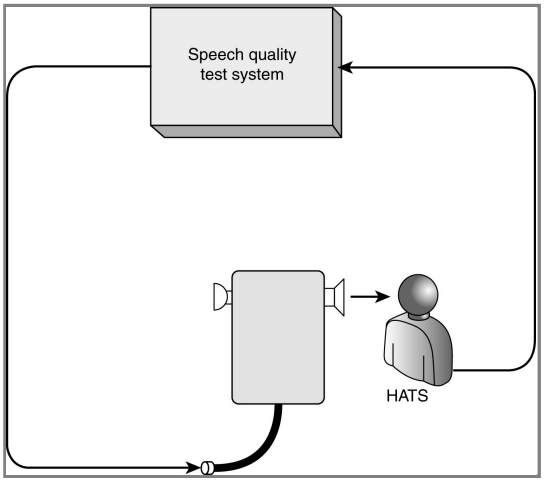

13.2.1.23 Wireless RSM Speaker Audio Speech Quality Test.

The wireless RSM speaker audio speech quality test shall be conducted in accordance with the following procedure *(see Figure 13.2.1.23)*:

(1) The RSM shall be set according to the following procedure:

(a) The RSM shall be mounted in front of the artificial ear via the manufacturer-provided fixture.

(b) The wireless RSM speaker shall be centered to the artificial ear at a horizontal distance of 50 mm ±5 mm (2 in. ±0.2 in.).

(2) The output level of the speech quality test shall be set to provide 80 percent Bluetooth® modulation to the speaker microphone.

(3) The input sensitivity of the speech quality analyzer shall be set to the level of the artificial ear calibration *(see 13.2.1.11)*.

(4) The measurement shall be started and the speech quality result reported.

Figure 13.2.1.23 Measurement Setup for Wireless RSM Speaker Audio Speech Quality Test.

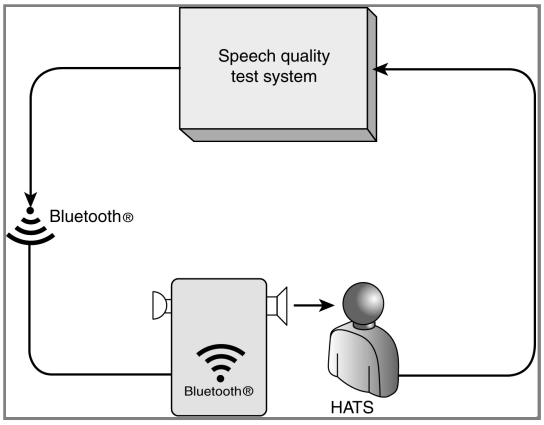

13.2.2 Report.

The speech quality result for each audio configuration shall be recorded and reported.

13.2.3 Interpretation.

13.2.3.1

Pass or fail performance shall be determined for each specimen in each audio configuration.

13.2.3.2

Failure of one or more specimens shall constitute failing performance.

13.3 Heat and Immersion Leakage Resistance.

13.3.1 Application.

This test method shall apply to all devices.

13.3.2 Samples.

13.3.2.1

Samples shall be complete devices.

13.3.2.2

Samples shall be conditioned as specified in 13.1.2.

13.3.3 Specimens.

13.3.3.1

Specimens for testing shall be complete devices.

13.3.3.2

A minimum of three specimens shall be tested.

13.3.3.3

Specimens shall be set as specified in 13.1.1.7.

13.3.3.4

Specimens shall be tested in accordance with 13.3.5 and 13.3.6.

13.3.4 Apparatus.

13.3.4.1

A test oven having minimum dimensions of 915 mm depth × 915 mm width × 1220 mm height (36 in. depth × 36 in. width × 48 in. height) shall be provided.

13.3.4.1.1

The test oven shall have an airflow rate of 38 m/min to 76 m/min (125 ft/min to 250 ft/min) at the standard temperature and pressure of 22°C (72°F) at 1 atmosphere measured at the center point of the oven.

13.3.4.1.2

A test thermocouple shall be positioned so that it is level with the horizontal centerline of a mounted specimen.

13.3.4.2

A test water container capable of covering the uppermost point of the specimen with a depth of 1.5 m (4.9 ft) of water shall be provided.

13.3.4.2.1

The water container shall maintain the devices at that depth.

13.3.4.2.2

The water temperature shall be 22°C ±3°C (72°F ±5°F).

13.3.5 Test Procedure 1.

13.3.5.1 Test Oven.

13.3.5.1.1

Specimens shall be placed in a test oven that has been preheated to 177°C, +5/−0°C (350°F, +10/−0°F).

13.3.5.1.2

Test exposure time of 15 minutes shall begin.

13.3.5.2 Specimen Removal.

13.3.5.2.1

After the test exposure time of 15 minutes, the specimens shall be removed from the oven and within 30 seconds immersed in the test water container for 15 minutes.

13.3.5.2.2

After 15 minutes, the specimens shall be removed from the test water container and wiped dry.

13.3.5.3

Specimens shall be subject to 13.3.5.1 and 13.3.5.2 for six complete cycles.

13.3.5.4 Water Leakage.

13.3.5.4.1

After the sixth cycle, the power source compartment of the specimens shall be opened and inspected for water leakage to determine pass or fail performance.

13.3.5.4.2

Where the device does not fail this portion of the test, the power source shall be reinstalled.

13.3.5.5

After the sixth cycle, the speech quality measurement shall be conducted as specified in Section 13.2 to determine the pass or fail performance.

13.3.5.6

Following the speech quality measurement, the specimen shall be operated to the manufacturer's instructions as specified in Sections 11.2 through 11.7 and 11.9 to determine functionality and pass or fail performance.

13.3.5.7 Specimen Testing.

13.3.5.7.1

After determining functionality, the specimen shall be tested and meet the requirements in Section 12.2.

13.3.5.7.2

The specimen shall meet the requirements as specified in Section 12.2 without degradation.

13.3.6 Test Procedure 2.

13.3.6.1 Reimmersion.

13.3.6.1.1

Following Test Procedure 1, the specimens shall be reimmersed in the test water container for an additional 5 minutes, +30/−0 seconds.

13.3.6.1.2

The power source compartment(s), if so equipped, shall be opened, and the power source shall not be installed.

13.3.6.2

After the 5-minute immersion, the specimens shall be removed from the test water container and wiped dry.

13.3.6.3

The electronic compartment(s) of the specimens shall be opened and inspected for water leakage to determine pass or fail performance.

13.3.7 Report.

13.3.7.1

The speech quality result measured after the heat and immersion leakage test shall be recorded and reported.

13.3.7.2

The functionality of the specimens shall be recorded and reported.

13.3.7.3

The requirements in Section 12.2 shall be tested, recorded, and reported.

13.3.8 Interpretation.

13.3.8.1

Pass or fail performance shall be determined for each specimen.

13.3.8.2

Failure of one or more specimens shall constitute failing performance.

13.4 Vibration Test.

13.4.1 Application.

This test method shall apply to all devices.

13.4.2 Samples.

13.4.2.1

Samples shall be complete devices.

13.4.2.2

Samples shall be conditioned as specified in 13.1.2.

13.4.3 Specimens.

13.4.3.1

Specimens for testing shall be complete devices.

13.4.3.2

A minimum of three specimens shall be tested.

13.4.3.3

Specimens shall be set as specified in 13.1.1.7.

13.4.3.4

Specimens shall be conditioned at a temperature of 22°C ±3°C (72°F ±5°F), and a relative humidity of 50 percent ±25 percent, for at least 4 hours.

13.4.3.5

Specimens shall be tested within 5 minutes after removal from conditioning.

13.4.4 Apparatus.

13.4.4.1

Product shall be tested on a typical package tester within the compartments specified in 13.4.4.2 through 13.4.4.4.

13.4.4.2

Compartments shall be set up as specified in Figure 13.4.4.2(a) and Figure 13.4.4.2(b).

Figure 13.4.4.2(a) Vibration Table Compartments — Top View (Not to Scale).

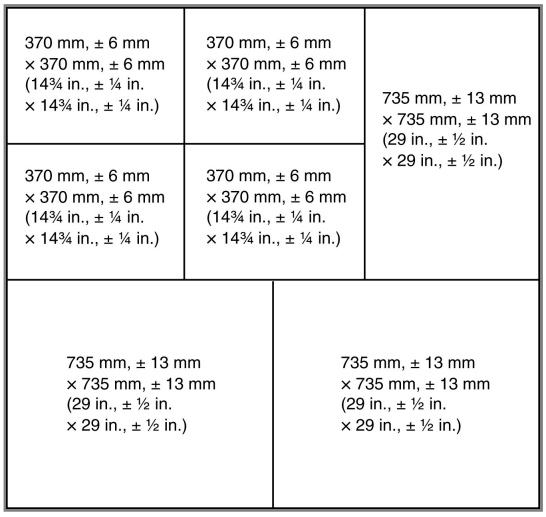

Figure 13.4.4.2(b) Vibration Table Compartments — Side View (Not to Scale).

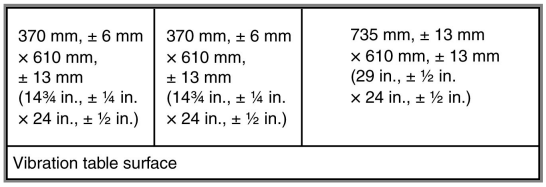

13.4.4.2.1

The sides and the base of the compartments shall be constructed of nominal 6 mm (¼ in.) stainless steel.

13.4.4.2.2

The top of the compartments shall remain open.

13.4.4.2.3

There shall be no burrs, sharp edges, surface discontinuities, or fasteners on the internal surfaces of the holding boxes.

13.4.4.3

The large compartments shall encase the complete devices that are larger than 5161 mm^2 (8 $in.^2$).

13.4.4.4

The small compartments shall encase the complete devices that are smaller than 5161 mm^2 (8 $in.^2$).

13.4.5 Procedure.

13.4.5.1

Test specimens shall be placed unrestrained in the compartments specified in 13.4.4.2.

13.4.5.2

Test specimens shall not be tied down.

13.4.5.3

The basic movement of the bed of the test table shall be a 25 mm orbital path such as can be obtained on a standard package tester operating in synchronous mode at 250 rpm ±5 rpm.

13.4.5.4

The test duration shall be 3 hours.

13.4.5.5

The speech quality measurement shall be conducted as specified in Section 13.2 to determine pass or fail performance.

Global SF

13.4.5.6

Following the speech quality measurement, the specimen shall be operated to the manufacturer's instructions as specified in Sections 11.2 through 11.7 and 11.9 to determine functionality and pass or fail performance.

13.4.5.7

Specimens shall be operated according to the manufacturer's instructions to determine functionality for data logging as specified in Section 11.17 to determine pass or fail performance.

13.4.5.8

After determining functionality, the specimen shall be tested and meet the requirements in Section 12.2.

13.4.6 Report.

13.4.6.1

The speech quality result measured after the vibration resistance test shall be recorded and reported.

13.4.6.2

The functionality of the specimens shall be recorded and reported.

13.4.6.3

The requirements in Section 12.2 shall be tested, recorded, and reported.

13.4.7 Interpretation.

13.4.7.1

Pass or fail performance shall be determined for each specimen.

13.4.7.2

Failure of one or more specimens shall constitute failing performance for this test.

13.5 Impact Acceleration Resistance Test.

13.5.1 Application.

This test method shall apply to all devices.

13.5.2 Samples.

13.5.2.1

Samples shall be complete devices.

13.5.2.2

Samples shall be conditioned as specified in 13.1.2.

13.5.3 Specimens.

13.5.3.1

Specimens for testing shall be complete devices.

13.5.3.2

A minimum of three specimens shall be tested.

13.5.3.3

Specimens shall be set as specified in 13.1.1.7.

13.5.4 Procedure.

13.5.4.1

Three specimens of product shall be subjected to a series of impact acceleration tests.

13.5.4.1.1

One test specimen for ambient temperature conditioning shall be exposed to a temperature of 22°C ±3°C (72°F ±5°F), for at least 4 hours.

13.5.4.1.2

One test specimen for cold temperature conditioning shall be exposed to a temperature of −20°C ±1°C (−4°F ±2°F), for at least 4 hours.

13.5.4.1.3

One test specimen for elevated temperature conditioning shall be exposed to a temperature of 71°C ±1°C (160°F ±2°F) for at least 4 hours.

13.5.4.2

Each product tested shall be complete with power source.

13.5.4.3 Postconditioning.

13.5.4.3.1

After conditioning, product shall be turned to the “on” position.

13.5.4.3.2

Testing shall begin within 30 seconds of removal from conditioning.

13.5.4.4

Following each conditioning, the product shall be dropped a total of eight times from a distance of 3 m (9.8 ft) onto a concrete surface so that impact is on each face and on one corner and one edge of the product.

13.5.4.5

The entire series of drops shall be completed within 10 minutes of removal from conditioning.

13.5.4.6

Specimens shall be visually evaluated to determine that the device enclosure has not incurred damage that affects normal operation or enclosure integrity.

13.5.4.7

The speech quality measurement shall be conducted as specified in Section 13.2 to determine pass or fail performance.

Global SR

13.5.4.8

Following the speech quality measurement, the specimen shall be operated to the manufacturer’s instructions as specified in Sections 11.2 through 11.7 and 11.9 to determine functionality and pass or fail performance.

13.5.4.9

Specimens shall be operated according to the manufacturer’s instructions to determine functionality for data logging as specified in Section 11.17 and pass or fail performance.

13.5.4.10

After determining functionality, the specimen shall be tested and meet the requirements in Section 12.2.

13.5.5 Report.

13.5.5.1

The speech quality result measured after the accelerated impact resistance test shall be recorded and reported.

13.5.5.2

The functionality of the specimens shall be recorded and reported.

13.5.5.3

The requirements in Section 12.2 shall be tested, recorded, and reported.

13.5.6 Interpretation.

13.5.6.1

Pass or fail performance shall be determined for each specimen.

13.5.6.2

Failure of one or more specimens shall constitute failing performance for this test.

13.6 Corrosion Test.

13.6.1 Application.

This test method shall apply to all devices.

13.6.2 Samples.

Samples shall be complete devices.

13.6.3 Specimens.

13.6.3.1

Specimens for testing shall be complete devices.

13.6.3.2

A minimum of three specimens shall be tested.

13.6.3.3

Specimens shall be set as specified in 13.1.1.7.

13.6.3.4

Specimens shall be conditioned at a temperature of 22°C ±3°C (72°F ±5°F), and a relative humidity of 50 percent ±25 percent, for at least 4 hours.

13.6.3.5

Specimens shall be tested within 5 minutes after removal from conditioning.

13.6.4 Procedure.

13.6.4.1 Test Parameters.

13.6.4.1.1

Specimens shall be tested in accordance with ASTM B117, *Standard Practice for Operating Salt Spray (Fog) Apparatus.*

13.6.4.1.2

Salt spray shall be 5 percent saline solution.

13.6.4.1.3

Test exposure shall be for 48 hours, +30/−0 minutes.

13.6.4.1.4

The chamber shall be stabilized at a temperature of 35°C ±3°C (95°F ±5°F).

13.6.4.2

Specimens shall be placed in the chamber in the typical operating position as used by first responders, as specified by the manufacturer.

13.6.4.3

At the conclusion of the salt spray period, specimens shall be stored in an environment of 22°C ±3°C (72°F ±5°F) at 50 percent ±5 percent relative humidity for a minimum of 48 hours.

13.6.4.4

Following the conditioning period, specimens shall be tested within 60 seconds of removal from conditioning.

13.6.4.5

The speech quality measurement shall be conducted as specified in Section 13.2 to determine pass or fail performance.

Global SF

13.6.4.6

The specimen shall be operated to the manufacturer's instructions as specified in Sections 11.2 through 11.7 and 11.9 to determine functionality and pass or fail performance.

13.6.4.7

After determining functionality, the specimen shall be tested and meet the requirements specified in Section 12.2.

13.6.5 Report.

13.6.5.1

The speech quality result measured after the corrosion test shall be recorded and reported.

13.6.5.2

The functionality of the specimens shall be recorded and reported.

13.6.5.3

The requirements in Section 12.2 shall be tested, recorded, and reported.

13.6.6 Interpretation.

13.6.6.1

Pass or fail performance shall be determined for each specimen.

13.6.6.2

Failure of one or more specimens shall constitute failing performance for this test.

13.7 Display Surface Abrasion Test.

13.7.1 Application.

This test shall apply to all devices.

13.7.2 Samples.

Samples shall be complete display surfaces or representative plaques from devices.

13.7.3 Specimens.

13.7.3.1

Specimens for testing shall be complete devices' display surfaces or representative plaques.

13.7.3.2

Four specimens shall be taken.

13.7.3.3

One of the specimens shall be the setup specimen.

13.7.3.4

The test specimen shall include all of the following criteria:

(1) The specimen shall be a square measuring 50 mm × 50 mm (2 in. × 2 in.).

(2) At least 38 mm (1½ in.) of the 50 mm × 50 mm (2 in. × 2 in.) square shall be taken from the display surface.

13.7.3.5

Each of the specimens shall be cleaned in the following manner:

(1) The specimen shall be rinsed with clean tap water.

(2) The specimen shall be washed with a solution of nonionic/low-phosphate detergent and water using a clean, soft gauze pad.

(3) The specimen shall be rinsed with deionized water.

(4) The specimen shall be blown dry with clean compressed air or nitrogen.

13.7.3.6

Samples shall be conditioned as specified in 13.1.2.

13.7.3.7

Specimens shall be tested within 5 minutes after removal from conditioning.

13.7.4 Apparatus.

The test apparatus shall be constructed in accordance with Figure 13.7.4(a) and Figure 13.7.4(b).

Figure 13.7.4(a) Lens Abrasion Tester.

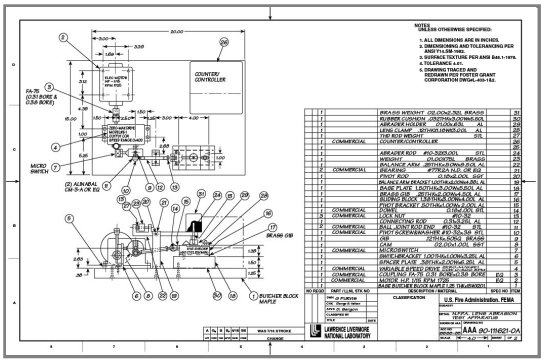

Figure 13.7.4(b) Lens Abrasion Tester (Details).

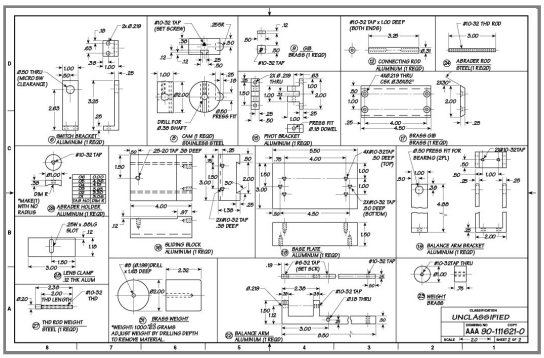

13.7.5 Procedure.

13.7.5.1

The haze of the specimen shall be measured using a haze meter in accordance with ASTM D1003, *Standard Test Method for Haze and Luminous Transmittance of Transparent Plastics,* and recorded with the following additions:

(1) The haze shall be measured in the middle 2 mm^2 of the specimen.

(2) The specimen shall be repositioned to achieve the maximum haze value within the area defined in 13.7.5.1(1).

(3) The haze meter shall have a specified aperture of 22 mm.

(4) The haze meter shall have a visual display showing 0.1 percent resolution.

(5) The haze meter shall be calibrated before and after each day's use following procedures specified in ASTM D1003, *Standard Test Method for Haze and Luminous Transmittance of Transparent Plastics*.

13.7.5.2 Placement.

13.7.5.2.1

The setup specimen shall be placed cover side up in the test apparatus specimen holder.

13.7.5.2.2

The specimen holder shall be configured with a flat surface under the lens or with an inner radius support.

13.7.5.3 Cylinder.

13.7.5.3.1

The pad holder shall consist of a cylinder 9.5 mm (0.4 in.) high and 25 mm (1 in.) in diameter with a radius of curvature equal to the radius of curvature of the outside of the lens in the display area ±0.25 diopter.

13.7.5.3.2

This cylinder shall be rigidly affixed to the stroking arm by a #10-32 UNF threaded rod.

13.7.5.4

The pad shall be a Blue Streak M306M wool felt polishing pad 23 mm (0.9 in.) in diameter.

13.7.5.5 Abrasive Disc.

13.7.5.5.1

The abrasive disc shall be made from 3M Part Number 7415, wood finishing pad.

13.7.5.5.2

A disc 23 mm (0.9 in.) in diameter shall be cut from the abrasive sheet.

13.7.5.5.3

The marked side of the disc shall be placed against the pad.

13.7.5.5.4

Care shall be exercised to maintain this orientation for each abrasive disc throughout the testing.

13.7.5.6 Stroking Arm.

13.7.5.6.1

The pad holder, pad, and abrasive disc shall be installed on the stroking arm.

13.7.5.6.2

The stroking arm shall be leveled to ±3 degrees by adjusting the threaded pin.

13.7.5.6.3

The pin shall be secured to prevent rotation of the pad holder.

13.7.5.6.4

The axis of curvature of the pad holder shall be coincident with the axis of curvature of the lens.

13.7.5.6.5

The stroking arm shall be counterbalanced with the pad holder, pad, and abrasive disc in place.

13.7.5.7

The set-up specimen shall be replaced with one of the three specimens to be tested.

13.7.5.8

A 1000 g ±5 g (2.7 lb ±0.16 oz) test weight shall be installed on the pin above the test sample.

13.7.5.9

The test shall be run for 200 cycles ±1 cycle with one cycle consisting of a complete revolution of the eccentric wheel.

13.7.5.10 Stroke.

13.7.5.10.1

The length of stroke shall be 14 mm (½ in.), producing a pattern 38 mm (1½ in.) long.

13.7.5.10.2

The frequency of the stroke shall be 60 cycles per minute ±1 cycle per minute.

13.7.5.10.3

The center of the stroke shall be within ±2 mm (±0.08 in.) of the center of the specimen.

13.7.5.11 Specimen Removal.

13.7.5.11.1

The specimen shall be removed and cleaned following the test procedure.

13.7.5.11.2

The abrasive disc shall be discarded.

13.7.5.12

The haze of the sample shall be measured following the test procedure.

13.7.5.13

The delta haze shall be calculated by subtracting the initial haze from the final haze.

13.7.5.14

The testing steps specified in 13.7.5.7 through 13.7.5.13 shall be repeated two times with a new sample and abrasive disc each time.

13.7.6 Report.

The three delta haze values shall be averaged, recorded, and reported.

13.7.7 Interpretation.

The average delta haze shall be evaluated to determine pass or fail.

13.8 High-Temperature Functionality Test.

13.8.1 Application.

This test method shall apply to all devices.

13.8.2 Samples.

13.8.2.1

Samples shall be complete devices.

13.8.2.2

Samples shall be conditioned as specified in 13.1.2.

13.8.3 Specimens.

13.8.3.1

Specimens for testing shall be complete devices.

13.8.3.2

A minimum of three specimens shall be tested.

13.8.3.3

Specimens shall be set as specified in 13.1.1.7.

13.8.3.4

Samples shall be conditioned as specified in 13.1.2.

13.8.3.5

Specimens shall be tested within 5 minutes after removal from conditioning.

13.8.4 Apparatus.

The test oven shall be as specified in ISO 17493, *Clothing and equipment for protection against heat — Test method for convective heat resistance using a hot air circulating oven.*

13.8.5 Procedure.

13.8.5.1

Testing shall be performed in accordance with ISO 17493, *Clothing and equipment for protection against heat — Test method for convective heat resistance using a hot air circulating oven,* using the following parameters:

(1) A test fixture capable of accommodating the device being tested shall be used.

(2) The test temperature shall be 260°C, +6/−0°C (500°F, +10/−0°F).

(3) Specimens shall be mounted in the “as worn” position on a test fixture.

(4) Specimens shall not touch any oven surface.

(5) The test fixture shall not degrade the oven recovery time.

(6) The test fixture shall be designed to allow the specimens to be attached in the same configuration as the specimens’ mounting assembly attaches to the specimens.

13.8.5.2

The test fixture with the specimen attached shall be placed in the test oven perpendicular with the front surface facing perpendicular to the airflow of the oven.

13.8.5.3

The specimen shall be set to the “on” mode.

13.8.5.4 Position.

13.8.5.4.1

There shall be no obstructions between the specimen and the airflow.

13.8.5.4.2

The test fixture shall position the specimen equidistant from all interior oven surfaces.

13.8.5.5 Oven Door.

13.8.5.5.1

The test oven door shall not remain open more than 15 seconds.

13.8.5.5.2

The air circulation shall be shut off while the door is open and turned on when the door is closed.

13.8.5.6 Recovery Time.

13.8.5.6.1

The total test oven recovery time shall not exceed 30 seconds.

13.8.5.6.2

The thermocouple reading shall remain at 260°C, +6/−0°C (500°F, +10/−0°F) for the duration of the test.

13.8.5.7 Exposure Time.

13.8.5.7.1

The test specimen, mounted as specified, shall be exposed in the test oven for 5 minutes, +15/−0 seconds.

13.8.5.7.2

The test exposure time shall begin when the test thermocouple recovers to 260°C, +6/−0°C (500°F, +10/−0°F).

13.8.5.8

Within 30 seconds of removal from the oven, the speech quality measurement shall be initiated as specified in Section 13.2 to determine pass or fail performance.

SR-43 Hide Legisla

13.8.5.9

Following the speech quality measurement, the specimen shall be operated to the manufacturer’s instructions as specified in Sections 11.2 through 11.7 and 11.9 to determine functionality and pass or fail performance.

13.8.5.10

Specimens shall operate according to the manufacturer’s instructions to determine functionality for data logging as specified in Section 11.17 and pass or fail performance.

13.8.5.11

After determining functionality, the specimen shall be tested and meet the requirements specified in Section 12.2.

13.8.6 Report.

13.8.6.1

The speech quality result measured after the heat resistance test shall be recorded and reported.

13.8.6.2

The functionality of the specimens shall be recorded and reported.

13.8.6.3

The requirements in Section 12.2 shall be tested, recorded, and reported.

13.8.7 Interpretation.

13.8.7.1

Pass or fail performance shall be determined for each specimen.

13.8.7.2

Failure of one or more specimens shall constitute failing performance for this test.

13.9 Heat and Flame Test.

13.9.1 Application.

This test method shall apply to all devices.

13.9.2 Samples.

Samples shall be complete devices.

13.9.3 Specimens.

13.9.3.1

Specimens for testing shall be complete devices.

13.9.3.2

A minimum of three specimens shall be tested.

13.9.3.3

Specimens shall be set as specified in 13.1.1.7.

13.9.3.4

Samples shall be conditioned as specified in 13.1.2.

13.9.3.5

Specimens shall be tested within 5 minutes after removal from conditioning.

13.9.4 Apparatus.

13.9.4.1

Specimens shall be attached to the front or rear of the test mannequin by the retention system, in accordance with the manufacturer’s instructions, by means of a loop, belt, or other means, on the outside or over the mannequin protective clothing.

13.9.4.2 Instructions.

13.9.4.2.1

Specimens shall be attached to the front or rear of the test mannequin in accordance with the RF/RSM manufacturer’s instructions, by means of a loop, belt, SCBA strap, or other means, on the outside or over the mannequin’s protective clothing.

13.9.4.2.2

Specimens shall be mounted on the mannequin in accordance with the RF/RSM manufacturer's instructions to simulate correct wearing position.

13.9.4.3 Heat and Flame Test Apparatus.

13.9.4.3.1

The heat and flame test apparatus shall be as specified in Figure 13.9.4.3.1(a) and Figure 13.9.4.3.1(b).

Figure 13.9.4.3.1(a) Heat and Flame Test Apparatus: Top View.

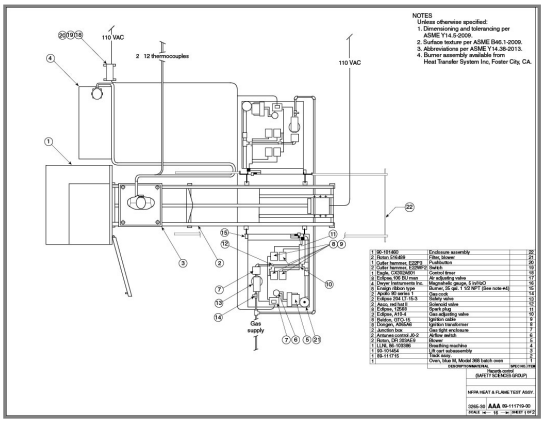

Figure 13.9.4.3.1(b) Heat and Flame Test Apparatus: Side View.

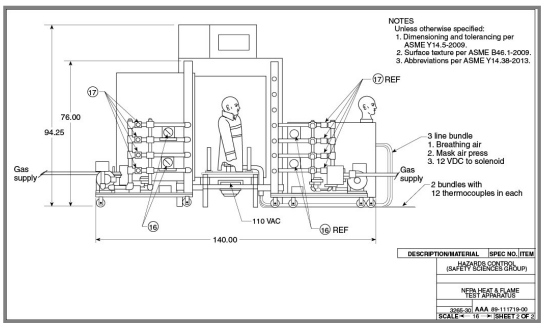

13.9.4.3.2

The heat and flame test apparatus shall not be supplied by the device manufacturer.

13.9.4.4 Test Oven.

13.9.4.4.1

The test oven shall be a horizontal forced-circulating-air oven with an internal velocity of 61 m/min (200 ft/min).

13.9.4.4.2

The test oven shall have minimum dimensions of 915 mm depth × 915 mm width × 1220 mm height (36 in. × 36 in. × 48 in.).

13.9.5 Procedure.

13.9.5.1

For calibration prior to the heat and flame test, the calibration mannequin shown in Figure 13.9.4.3.1(b) shall be exposed to direct flame contact for 10 seconds using the heat and flame test apparatus.

13.9.5.2

All peak temperature readings shall be within a temperature range of 815°C to 1150°C (1500°F to 2102°F).

13.9.5.3

The average mean of all peak temperature readings shall not be higher than 950°C (1742°F).

13.9.5.4

The test oven recovery time, after the door is closed, shall not exceed 60 seconds.

13.9.5.5 Temperature.

13.9.5.5.1

Specimens mounted on the test fixture shall first be placed in the test oven, which has been preheated to 95°C ±2°C (203°F ±5°F), for 15 minutes, +15/−0 seconds.

13.9.5.5.2

The test exposure time of 15 minutes shall begin after the door is closed and the oven temperature recovers to 95°C (203°F).

13.9.5.6

At the completion of the 15-minute exposure at 95°C ±2°C (203°F ±5°F), the specimen mounted on the test fixture shall be moved out of the oven and into the center of the burner array.

13.9.5.7 Flame Contact.

13.9.5.7.1

The product shall then be exposed to direct flame contact for 10 seconds, +¼/−0 seconds.

13.9.5.7.2

This exposure shall begin within 20 seconds of the product being removed from the test oven.

13.9.5.8

The speech quality measurement shall be conducted as specified in Section 13.2 to determine pass or fail performance.

SR-44 Hide Legisla

13.9.5.9

Following the speech quality measurement, the specimen shall be operated to the manufacturer's instructions as specified in Sections 11.2 through 11.7 and 11.9 to determine functionality and pass or fail performance.

13.9.5.10

After determining functionality, the specimen shall be tested and meet the requirements specified in Section 12.2.

13.9.6 Report.

13.9.6.1

Any afterflame of the test specimen exceeding 2.2 seconds shall be recorded and reported.

13.9.6.2

Anything falling from the test specimen shall be recorded and reported.

13.9.6.3

Any test specimen falling from the mounted position shall be recorded and reported.

13.9.6.4

The speech quality result measured after the heat and flame resistance test shall be recorded and reported.

Global SF

13.9.6.5

The functionality of the specimens as specified in Sections 11.2 through 11.7 and 11.9 shall be recorded and reported.

13.9.6.6

The requirements of Section 12.2 shall be tested, recorded, and reported.

13.9.7 Interpretation.

13.9.7.1

Pass or fail performance shall be determined for each specimen.

13.9.7.2

Failure of one or more specimens shall constitute failing performance for this test.

13.9.7.3

Any test specimen exceeding 2.2 seconds of afterflame shall constitute failing performance.

13.9.7.4

Any test specimen having parts or other items falling off shall constitute failing performance.

13.9.7.5

Any test specimen falling from its mounted position shall constitute failing performance.

13.9.7.6

Specimens shall be operated according to the manufacturer's instructions to determine functionality for data logging as specified in Section 11.17 and pass or fail performance.

13.10 Product Label Durability Test.

13.10.1 Application.

This test method shall apply to all product labels.

13.10.2 Samples.

Samples shall be complete devices.

13.10.3 Specimens.

13.10.3.1

Specimens for testing shall be complete devices with product labels attached.

13.10.3.2

A minimum of three specimens shall be tested.

13.10.3.3

Samples shall be conditioned as specified in 13.1.2.

13.10.4 Procedure.

13.10.4.1

Specimens with all product labels attached shall be subjected to the tests specified in Sections 13.3, 13.6, and 13.8.

13.10.4.2

After each test, the specimen product labels shall be examined at a distance of 305 mm (12 in.) by the unaided eye with 20/20 vision or vision corrected to 20/20.

13.10.4.3

The product labels shall be permitted to be wiped clean with an untreated cloth prior to being examined.

13.10.5 Report.

The legibility of each product label shall be recorded and reported.

13.10.6 Interpretation.

Any specimen failing the test shall constitute failing performance.

13.11 Cable Pullout Test.

13.11.1 Application.

This test method shall apply to devices and any associated assemblies with interconnecting wiring.

13.11.2 Samples.

Samples shall be complete devices.

13.11.3 Specimens.

13.11.3.1

Specimens for testing shall be complete devices with any associated assemblies with interconnecting wiring.

13.11.3.2

A minimum of three specimens shall be tested.

13.11.3.3

Specimens shall be set as specified in 13.1.1.7.

13.11.3.4

Samples shall be conditioned as specified in 13.1.2.

13.11.4 Apparatus.

A mass of known weight with the means for attachment to wiring shall be provided.

13.11.5 Procedure.

13.11.5.1

Samples shall be conditioned as specified in 13.1.4.

13.11.5.2

A force of 156 N, +9/−0 N (35 lbf, +2/−0 lbf) shall be applied at a rate of 2.0 in./min (±0.5 in./min), in an axial direction to the wiring of the specimen tested.

13.11.5.3

The functionality of the specimens as specified in Sections 11.2 through 11.7 and 11.9 shall be recorded and reported.

13.11.6 Report.

13.11.6.1

Observations of the nonseparation and separation of interconnecting wiring shall be recorded and reported.

13.11.6.2

The speech quality measurement shall be conducted as specified in Section 13.2 to determine pass or fail performance.

SR-45 Hide Legisla

13.11.6.3

The functionality of the specimens as specified in Sections 11.2 through 11.7 and 11.9 shall be recorded and reported.

13.11.7 Interpretation.

13.11.7.1

Pass or fail performance shall be determined for each specimen.

13.11.7.2

Failing performance of one or more specimens shall constitute failing performance for this test.

13.12 Case Integrity Test.

13.12.1 Application.

This test method shall apply to all devices.

13.12.2 Samples.

13.12.2.1

Samples shall be complete devices.

13.12.2.2

Samples shall be conditioned as specified in 13.1.2.

13.12.3 Specimens.

13.12.3.1

Specimens for testing shall be complete devices.

13.12.3.2

Specimens shall be set as specified in 13.1.1.7.

13.12.4 Procedure.

13.12.4.1

Specimens shall be subjected to a test weight of 200 kg, +2/−0 kg (442 lb, +4.4/−0 lb).

13.12.4.2

The test weight shall be applied to each of the following surfaces of the specimen case, housing, or enclosure:

(1) Right

(2) Left

(3) Front

(4) Back

13.12.4.3

The test weight shall be placed so as to avoid impact loading.

13.12.4.4

The test weight shall remain on each surface of the specimen case for 1 minute, +15/−0 seconds.

13.12.4.5

After removal of the test weight, each surface of the specimen case, housing, and enclosure shall be examined for damage.

13.12.5

The speech quality measurement shall be conducted as specified in Section 13.2 to determine pass or fail performance.

Global SF

13.12.6

Following the speech quality measurement, the specimen shall be operated to the manufacturer's instructions as specified in Sections 11.2 through 11.7 and 11.9 to determine functionality and pass or fail performance.

13.12.7

After determining functionality, the specimen shall be tested and meet the requirements specified in Section 12.2.

13.12.8 Report.

13.12.8.1

The speech quality result measured after the case integrity test shall be recorded and reported.

13.12.8.2

The functionality of the specimens shall be recorded and reported.

13.12.8.3

The requirements of Section 12.2 shall be tested, recorded, and reported.

13.12.9 Interpretation.

13.12.9.1

Pass or fail performance shall be determined for each specimen.

13.12.9.2

Failure of one or more specimens shall constitute failing performance for this test.

13.13 Water Drainage Test.

13.13.1 Application.

This test method shall apply to all devices.

13.13.2 Samples.

13.13.2.1

Samples shall be complete devices.

13.13.2.2

Samples shall be conditioned as specified in 13.1.2.

13.13.3 Specimens.

13.13.3.1

Specimens for testing shall be complete devices.

13.13.3.2

Specimens shall be set as specified in 13.1.1.7.

13.13.3.3

A minimum of three specimens shall be tested.

13.13.4 Procedure.

13.13.4.1

Specimens shall be subjected to three water drainage tests.

13.13.4.1.1

The first test shall have the specimens positioned with the speaker oriented in the position it is intended to be worn, in accordance with the manufacturer's instructions.

13.13.4.1.2

The second test shall have the specimens positioned with the speaker oriented horizontally and facing up.

13.13.4.1.3

A third test shall have the specimen positioned where the speaker is oriented in a position that will retain the greatest volume of water.

13.13.4.2

Water shall be introduced into all openings, indentations, and grilles of the specimens until water overflows from each such opening, indentation, and grille.

13.13.4.3

The filling method shall ensure that no air bubbles remain in any of the openings, indentations, and grilles.

13.13.4.4

The speech quality result shall be measured and recorded starting at the 60-second mark, +5/−0 seconds, to determine pass or fail performance.

13.13.5 Report.

13.13.5.1

The speech quality result measured after the water drainage test shall be recorded and reported.

Global SF

13.13.5.2

The functionality of the specimens as specified in Sections 11.2 through 11.7 and 11.9 shall be recorded and reported.

13.13.6 Interpretation.

13.13.6.1

Pass or fail performance shall be determined for each specimen.

13.13.6.2

Failure of one or more specimens shall constitute failing performance for this test.

13.14 Tumble — Vibration Test.

13.14.1 Application.

This test method shall apply to all RF devices and RSMs.

13.14.2 Samples.

13.14.2.1

Samples shall be complete RF devices and RSMs.

13.14.2.2

Samples shall be conditioned as specified in 13.1.2.

13.14.3 Specimens.

13.14.3.1

Specimens for testing shall be complete RF devices and RSMs.

13.14.3.2

A minimum of three specimens shall be tested.

13.14.4 Apparatus.

The tumble test apparatus shall be as specified in Figure 13.14.4.

Figure 13.14.4 Tumble Test Apparatus.

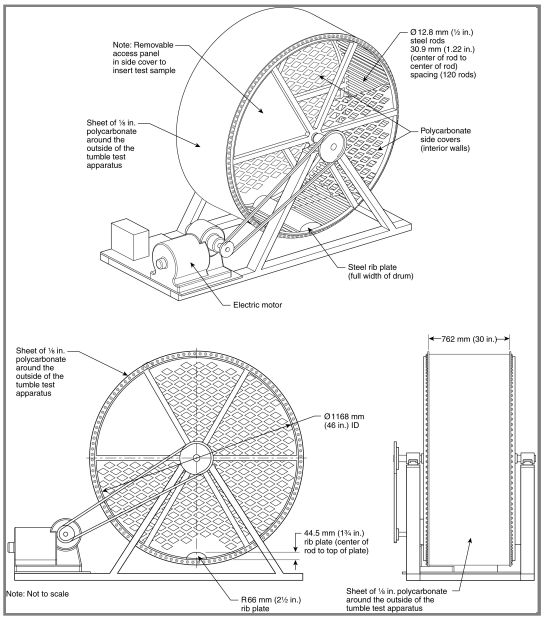

13.14.5 Procedure.

13.14.5.1

The test specimens shall be placed unrestrained in the tumbling apparatus.

13.14.5.2

Only one specimen shall be tested at a time.

13.14.5.3

The tumbling apparatus shall be run at a speed of 15 rpm ±1 rpm.

13.14.5.4

The test shall be run for a duration of 3 hours, +5/−0 minutes.

13.14.5.5

Specimens shall be operated according to the manufacturer's instructions to determine functionality as specified in 12.1.1 and pass or fail performance.

13.14.5.6

Upon completion of the test duration, specimens shall be operated according to the manufacturer's instructions to determine functionality for data logging as specified in Section 11.20 and pass or fail performance.

13.14.5.7

The speech quality level shall be measured as specified in 12.1.1 to determine pass or fail performance.

13.14.6 Report.

13.14.6.1

The specimen speech quality level shall be measured, recorded, and reported.

13.14.6.2

The functionality of the specimens shall be recorded and reported.

13.14.6.3

The requirements in Section 12.2 shall be tested, recorded, and reported.

13.14.7 Interpretation.

13.14.7.1

Pass or fail performance shall be determined for each specimen.

13.14.7.2

Any one specimen failing the test shall constitute failing performance.

13.15 TIA Transmit Power.

13.15.1 Application.

This test method shall apply to all RF devices.

13.15.2 Samples.

13.15.2.1

Samples shall be complete devices.

13.15.2.2

Samples shall be conditioned as specified in 13.1.2.

13.15.3 Specimens.

13.15.3.1

Specimens for testing shall be complete devices.

13.15.3.2

A minimum of three specimens shall be tested.

13.15.3.3

Specimens shall be tested within 5 minutes after removal from conditioning.

13.15.4 Procedure.

Specimens shall be tested for carrier output power in the analog mode as specified in 2.2.1 of TIA-603-E, *Land Mobile FM or PM — Communications Equipment — Measurement and Performance Standards*.

13.15.5 Report.

The carrier output power and the RF power output shall be recorded and reported.

13.15.6 Interpretation.

13.15.6.1

Pass or fail performance shall be determined for each specimen.

13.15.6.2

Failing performance of one or more specimens shall constitute failing performance for this test.

13.16 TIA Carrier Frequency Stability.

13.16.1 Application.

This test method shall apply to all RF devices.

13.16.2 Samples.

13.16.2.1

Samples shall be complete devices.

13.16.2.2

Samples shall be conditioned as specified in 13.1.2.

13.16.3 Specimens.

13.16.3.1

Specimens for testing shall be complete devices.

13.16.3.2

A minimum of three specimens shall be tested.

13.16.3.3

Specimens shall be tested within 5 minutes after removal from conditioning.

13.16.4 Procedure.

Specimens shall be tested for carrier frequency stability in the analog mode as specified in 2.2.2 of TIA-603-E, *Land Mobile FM or PM — Communications Equipment — Measurement and Performance Standards* .

13.16.5 Report.

The carrier frequency stability and the operating frequency accuracy shall be recorded and reported.

13.16.6 Interpretation.

13.16.6.1

Pass or fail performance shall be determined for each specimen.

13.16.6.2

Failing performance of one or more specimens shall constitute failing performance for this test.

13.17 TIA Receiver Sensitivity.

13.17.1 Application.

This test method shall apply to all RF devices.

13.17.2 Samples.

13.17.2.1

Samples shall be complete devices.

13.17.2.2

Samples shall be conditioned as specified in 13.1.2.

13.17.3 Specimens.

13.17.3.1

Specimens for testing shall be complete devices.

13.17.3.2

A minimum of three specimens shall be tested.

13.17.3.3

Specimens shall be tested within 5 minutes after removal from conditioning.

13.17.4 Procedure.

Specimens shall be tested for reference sensitivity in the analog mode as specified in 2.1.4 of TIA-603-E, *Land Mobile FM or PM — Communications Equipment — Measurement and Performance Standards*.

13.17.5 Report.

The reference sensitivity (analog) shall be recorded and reported.

13.18 Power Source Performance Test.

13.18.1 Application.

This test method shall apply to all RF devices.

13.18.2 Samples.

13.18.2.1

Samples shall be complete devices.

13.18.2.2

Samples shall be conditioned as specified in 13.1.2.

13.18.3 Specimens.

13.18.3.1

Specimens for testing shall be complete devices with a fully charged battery.

13.18.3.2

A minimum of three specimens shall be tested.

13.18.4 Procedure.

13.18.4.1

The RF device shall be continuously operated for at least 8 hours on a standard-duty cycle of 10-10-80 at maximum rated transmit power.

13.18.4.2

The RF device shall be tested for carrier output power as specified in 2.2.1 of TIA-603-E, *Land Mobile FM or PM — Communications Equipment — Measurement and Performance Standards,* and RF power output as specified in 2.2.1 of TIA-102.CAAA-F, *Project 25 Digital C4FM/CQPSK Transceiver Measurement Methods*.

13.18.4.3

Transmit power shall not decrease by more than 1 dB for the first 8 hours as specified in 12.3.1.

13.18.5 Report.

13.18.5.1

The delta power shall be calculated by subtracting the final transmit power from the initial transmit power.

13.18.5.2

Delta power shall be recorded and reported.

13.18.5.3

The functionality of the specimens shall be recorded and reported.

13.18.6 Interpretation.

13.18.6.1

Pass or fail performance shall be determined for each specimen.

13.18.6.2

Failing performance of one or more specimens shall constitute failing performance for this test.

13.19 Electronic Temperature Stress Test.

SR-46 Hide Legisla

13.19.1 Application.

This test method shall apply to all RF devices and RSMs.

13.19.2 Samples.

13.19.2.1

Samples shall be conditioned as specified in 13.1.2.

13.19.2.2

A minimum of three specimens shall be tested.

13.19.3 Procedure.

13.19.3.1

Each specimen shall be subjected to a series of three temperature stress tests identified as Test Procedure 1, for elevated temperature, in 13.19.4; Test Procedure 2, for low operating temperature, in 13.19.5; and Test Procedure 3, for temperature shock, in 13.19.6.

13.19.3.2 Specimens.

13.19.3.2.1

The same three specimens shall be used for all three test series.

13.19.3.2.2

Each specimen tested shall be complete with power source.

13.19.3.3 Conditions.

13.19.3.3.1

The test chamber or cabinet shall be capable of maintaining the required conditions specified in 13.19.4, 13.19.5, and 13.19.6 throughout the envelope of air surrounding the specimen being tested.

13.19.3.3.2

The required conditions shall be continuously monitored.

13.19.3.4

Following each test procedure, the specimen shall be allowed to stabilize at ambient conditions prior to proceeding to the next test procedure.

13.19.4 Test Procedure 1.

13.19.4.1

Specimens shall be placed in the test apparatus that has been stabilized at 49°C, +3/−0°C (120°F, +5/−0°F).

13.19.4.2

After 6 hours, the temperature shall be raised to 71°C, +3/−0°C (160°F, +5/−0°F) within 1 hour and maintained for 4 hours.

13.19.4.3

The temperature shall then be decreased to 49°C, +3/−0°C (120°F, +5/−0°F) within 1 hour.

13.19.4.4

This cycle shall be repeated twice.

13.19.4.5

After the second cycle, the temperature shall be raised to 71°C, +3/−0°C (160°F, +5/−0°F) for 4 hours.

13.19.4.6

Specimens shall be removed following the specified conditioning, and testing shall begin within 30 seconds or removal from conditioning.

13.19.4.7

Specimens shall be operated according to the manufacturer's instructions to determine functionality as follows:

(1) RF device as specified in Sections 11.2 through 11.7

(2) RSM as specified in Section 11.9

13.19.4.8

The RF device shall transmit and a receiving RF device shall be used to determine pass or fail performance.

13.19.5 Test Procedure 2.

13.19.5.1

Specimens shall be placed and maintained in the test apparatus that has been stabilized at −20°C, +0/−3°C (−4°F, +0/−5°F) for a minimum of 4 hours.

13.19.5.2 Removal.

13.19.5.2.1

Specimens shall be removed following the specified conditioning.

13.19.5.2.2

Testing shall begin within 30 seconds of removal from conditioning.

13.19.5.3

Specimens shall be operated according to the manufacturer's instructions to determine functionality as follows:

(1) RF device as specified in Sections 11.2 through 11.7

(2) RSM as specified in Section 11.9

13.19.5.4

The RF device shall transmit and a receiving RF device shall be used to determine pass or fail performance.

13.19.6 Test Procedure 3.

13.19.6.1 Hot/Cold Conditioning.

13.19.6.1.1

Specimens shall be conditioned for 4 hours in the test apparatus that has been stabilized at −20°C, +0/−3°C (−4°F, +0/−5°F).

13.19.6.1.2

Specimens shall be removed from the cold condition.

13.19.6.1.3

Within 5 minutes, specimens shall be conditioned for 4 hours in another test apparatus that has been stabilized at 71°C, +3/−0°C (160°F, +5/−0°F).

13.19.6.2

The cold-to-hot cycle shall be repeated twice.

13.19.6.3 Removal.

13.19.6.3.1

Specimens shall be removed following the specified conditioning.

13.19.6.3.2

Specimen testing shall begin within 30 seconds of removal from conditioning.

13.19.6.4

Specimens shall be operated according to the manufacturer's instructions to determine functionality as follows:

(1) RF device as specified in Sections 11.2 through 11.7

(2) RSM as specified in Section 11.9

13.19.6.5

The RF device shall transmit and a receiving RF device shall be used to determine pass or fail performance.

13.19.7 Report.

The functioning of the specimens shall be recorded and reported.

13.19.8 Interpretation.

13.19.8.1

Pass or fail performance shall be determined for each specimen.

13.19.8.2

Failure of one or more specimens shall constitute failing performance for this test.

13.20 Antenna VSWR Swept Frequency Test.

13.20.1 Application.

This test method shall apply to all RF devices.

13.20.2 Samples.

13.20.2.1

Samples shall be complete devices.

13.20.2.2

Samples shall be conditioned as specified in 13.1.2.

13.20.3 Specimens.

Specimens for testing shall be the RF device antenna.

13.20.4 Apparatus.

13.20.4.1

The manufacturer shall provide a fixture to mount the antenna to facilitate the swept frequency VSWR test.

13.20.4.2

The manufacturer shall provide an N-type female connector to connect the RF cable from the meter to the fixture.

13.20.5 Procedure.

13.20.5.1 Calibration.

13.20.5.1.1

The swept frequency VSWR meter shall be calibrated by connecting the meter to the fixture and applying the calibration loads to the antenna mounting point.

13.20.5.1.2

Adapters shall be permitted to connect the calibration load to the antenna mounting point.

13.20.5.1.3

The effect of adapters on the calibration shall be ignored.

13.20.5.2

The specimen’s antenna shall be removed from the specimen and mounted in the fixture.

13.20.5.3 Configuration.

13.20.5.3.1

The swept frequency VSWR meter shall be configured for a start and stop frequency equal to the vendor-specified antenna bandwidth.

13.20.5.3.2

A minimum of 100 sample points shall be taken across the bandwidth.

13.20.5.4 VSWR Charts.

13.20.5.4.1

A baseline swept VSWR chart of the antenna shall be created before the RF device is subjected to any performance tests.

13.20.5.4.2

Subsequent swept VSWR charts shall be created after each performance test as specified.

13.20.5.4.3

These VSWR charts shall be compared to the baseline.

13.20.6 Report.

The greatest change between the baseline and subsequent test curves shall be calculated, recorded, and reported.

13.20.7 Interpretation.

13.20.7.1

Pass or fail performance shall be determined for each specimen.

13.20.7.2

Failing performance of one or more specimens shall constitute failing performance for this test.

Chapter 14 Ground Ladder Mounting and Storage (NFPA 1932)

14.1* Administration.

14.1.1 Scope.

Chapters 14 through 17 specify the requirements for the use, maintenance, inspection, and service testing of fire department ground ladders.

14.1.2 Purpose.

14.1.2.1

The purpose of Chapters 14 through 17 is to provide requirements for the use, maintenance, and service testing of fire department ground ladders that will result in reasonable safety for firefighters and victims during the use of those ground ladders.

14.1.2.2

Chapters 14 through 17 also provide users of fire department ground ladders with a means to determine if in-service fire department ground ladders are fit for continued service.

14.1.3 Application.

Chapters 14 through 17 applies to all ground ladders, regardless of year of manufacture, used by fire departments for rescue, firefighting operations, and training.

14.2 Requirements for Mounting of Ground Ladders.

14.2.1

The storage positions and mounting brackets for ground ladders shall be designed such that the ladders do not need to be forced into their mounting or storage positions on the fire apparatus.

14.2.2

Ground ladders shall be mounted and protected to prevent movement, abrasion, or other damage to the ground ladder while they are on the fire apparatus.

14.2.3

When mounted on the apparatus, ground ladders shall not be subject to exposure to heat sources (such as engine heat) of 100°C (212°F) or greater.

14.2.4

Ground ladders shall be supported to prevent any sagging or distortion while they are mounted on the fire apparatus.

14.2.5

The rollers and other moving parts of the frame holding the ground ladders on the apparatus shall be lubricated in accordance with the apparatus manufacturer’s instructions at least every 6 months.

14.2.5.1

Prior to relubricating rollers or moving parts, old lubricant shall be removed.

14.2.5.2

If rollers and other moving parts are rusted, they shall be brushed with a wire brush and cleaned to remove all loose scale, and then painted before lubricating.

14.3 Requirements for Storage of Ground Ladders.

14.3.1

Ground ladders shall not be stored in an area where they are exposed to the elements.

14.3.2*

Wood ground ladders shall be stored away from heat sources such as steam pipes, radiators, and forced hot air heaters and out of direct sunlight.

14.3.3*

Fiberglass ground ladders shall be stored out of direct sunlight.

Chapter 15 Use of Ground Ladders (NFPA 1932)

15.1 Requirements for All Ground Ladders.

15.1.1*

Fire department ground ladders shall be used for rescue, firefighting operations, and training and shall not be used for any other purpose.

15.1.2*

Multipurpose ladders used by fire service personnel for firefighting operations, rescue, and training shall meet the requirements of ANSI-ASC A14.2, *American National Standard for Ladders — Portable Metal — Safety Requirements*, or ANSI-ASC A14.5, *American National Standard for Ladders — Portable Reinforced Plastic — Safety Requirements*, and have a duty rating of Type 1A or 1AA.

15.1.3* Ground Ladder Loading.

15.1.3.1

The total weight on the ground ladder, including persons, their equipment, and any other weight, such as a charged fire hose, shall not exceed the duty rating as given in Table 15.1.3.1.

Table 15.1.3.1 Ground Ladder Duty Rating

	Maximum Load	
Type	**kg**	**lb**
Folding ladders	136	300
Multipurpose ladders	136	300
Pompier ladders	136	300
Single and roof ladders	340	750
All extension ladders	340	750
Combination ladders	340	750

15.1.3.2

The loads in Table 15.1.3.1 shall not be imposed on the ground ladder unless the ground ladder is set at the correct angle of inclination and secured as specified in Section 15.1.

15.1.4 Inspections.

15.1.4.1

Ground ladders shall be visually inspected in accordance with Section 16.1 after each use.

15.1.4.2

If ground ladders are used other than as specified in this standard, they shall be removed from service, inspected, and service tested prior to further use.

15.1.5

Ground ladders shall not be tied together to provide longer units.

15.1.6

Ground ladder butts shall be set on a firm, level base before ground ladders are used.

15.1.7

Ground ladders shall not be placed on ice, snow, or slippery surfaces unless means to prevent slipping are employed.

15.1.8 Angle of Inclination.

15.1.8.1

To provide the optimum combination of load carrying and stability, ground ladders shall be set at the correct angle of inclination by positioning the base section a horizontal distance from the vertical wall equal to one-quarter the working length of the ground ladder.

15.1.8.2*

An angle of inclination of between 70 and 76 degrees shall be permitted, with an angle of 75½ degrees being optimum.

15.1.9*

Ground ladders shall be secured at the base, either by a firefighter or by mechanical means, to prevent slippage.

15.1.9.1*

Extreme caution shall be used when the angle of inclination is less than 70 degrees.

15.1.9.2

At angles less than 70 degrees, mechanical means shall be used to prevent slippage.

15.1.10

Any time a ladder is positioned or repositioned, a visual determination that the pawls are correctly latched shall be made before the ladder is climbed.

15.1.11

Ground ladders shall be secured at the top, to prevent slippage, by the first person to climb the ladder.

15.1.12

Raised ground ladders shall not be slid along cornices or roof edges.

15.1.13

After the ground ladder is initially set or placed, it shall not be “rolled” beam-over-beam to reach a new position.

15.1.14

Raised ground ladders shall not be repositioned from the top, nor shall they be repositioned while a person is on the ladder.

15.1.15

Ground ladders that have been removed from their storage location on the apparatus shall not be exposed to non–fire related heat sources (such as from the apparatus exhaust pipe) of 100°C (212°F) or greater.

15.2 Additional Requirements for Extension Ladders.

15.2.1

Fly sections of extension ladders shall not be used as single ladders unless they have been designed and tested in accordance with NFPA 1931 for single ladder use.

15.2.2

Extension ladders shall be used in the fly-up, fly away from the building position unless otherwise specified by the manufacturer.

15.2.3*

Halyards on extension ladders shall be tied off to the base section or shall be otherwise secured before the ground ladder is climbed.

15.2.4

Length adjustments shall not be made from the top of extension ladders.

15.2.5

If an extension ladder is equipped with staypoles, the staypoles shall be placed to act as stabilizers and shall not be placed so as to become load-bearing members under no-load conditions (no one on the ladder).

15.2.6*

If an extension ladder is equipped with staypoles and both poles cannot be properly placed due to obstructions or terrain, then neither staypole shall be placed.

15.3 Additional Requirements for Metal Ground Ladders.

15.3.1

Extreme caution shall be used when work occurs around charged electrical circuits because metal ground ladders conduct electricity.

15.3.2

All metal ground ladders shall be kept away from power lines or other potential electrical hazards.

15.4* Additional Requirements for Wood Ground Ladders.

Extreme caution shall be used around electrical hazards because wet wood ground ladders can conduct electricity.

15.5* Additional Requirements for Fiberglass Ground Ladders.

Extreme caution shall be used around electrical hazards because wet fiberglass ground ladders can conduct electricity.

Chapter 16 Inspection and Maintenance of Ground Ladders

Save As Word Show Revisions/Notes Show PI/PC's Quick Print

16.1 Inspection of Ground Ladders.

16.1.1

All ground ladders shall be inspected and tested in accordance with the manufacturer's recommendations and to the requirements established by this standard.

16.1.2

Ground ladders shall be visually inspected at least once every month and after each use.

16.1.3

A visual inspection shall include, but not be limited to, the following:

(1) Heat sensor labels on metal and fiberglass ladders, and on wood ladders if provided, for a change indicating heat exposure

(2) All rungs, for snugness and tightness

(3) All bolts and rivets, for tightness; bolts on wood ladders, for snugness and tightness without crushing the wood

(4) Welds, for any cracks or apparent defects

(5) Beams and rungs, for cracks, splintering, breaks, gouges, checks, wavy conditions, or deformation

(6) Butt spurs, for excessive wear or other defects

(7)* Halyards, for fraying or kinking

(8) Pulleys and associated hardware, for proper operation and condition

(9) Roof hooks, for sharpness and proper operation

(10) Rungs, for punctures, wavy conditions, worn serrations in the foot contact areas, serrations worn down to base metal in any location, or deformation

(11) Base material, for loss due to corrosion

(12) Ladder slide areas, for galling or absence of wax, if required by the manufacturer

(13) Fiberglass and wood ladder beams, for loss of gloss; wood ground ladders, for damage to the varnish finish

(14) Pawl assemblies, for correct operation

(15) Wire rope on 3- and 4-section ladders, for snugness when the ladder is in the bedded position, to ensure proper synchronization of upper sections during operation

(16)* Labels, present and legible

(17) Ladders, clean with no buildup of grease, dirt, or grime

(18) The diagonal brace on the base of a folding ladder, for damage

(19) The hinge assembly and locking pin assemblies on a multipurpose ladder, for the presence of any visual damage and for proper operation

16.1.3.1

All conditions found unacceptable during the subject visual inspection shall be corrected prior to the ladder being returned to service.

16.1.4

The ground ladder shall be removed from service if there are any signs of damage beyond gouges or dents or if defective parts or welds are discovered during the visual inspection.

16.1.4.1*

If the ground ladder is removed from service, it shall be obviously marked as "out of service" with the date and a description of the defect requiring the ladder to be removed from service.

16.1.4.2

The ladder shall be repaired in accordance with the manufacturer's instructions, and service tested in accordance with Section 17.2, Section 17.3, or Section 17.4 as applicable, before it is returned to service, or it shall be destroyed.

16.1.4.3

Damaged or missing labels shall be removed and new labels applied in accordance with the ladder manufacturer's guidelines.

16.1.5 Gouges and Dents.

16.1.5.1

If gouges and dents are discovered in a beam during the visual inspection, the ladder shall be subjected to the applicable load test as specified in Chapter 17.

16.1.5.2

Gouges and dents in a beam shall not be cause to fail a ladder if it passes the applicable load test.

16.1.5.3

If gouges or dents are discovered in a rung, the manufacturer shall be consulted regarding the need for repair prior to the ladder being returned to service.

16.1.6

If a wood ground ladder develops dark streaks in the beams, the ladder shall be removed from service and shall be service tested as specified in Chapter 17 prior to further use.

16.2 Maintenance of Ground Ladders.

16.2.1

All ground ladders shall be maintained in accordance with the manufacturer's recommendations.

16.2.2

Temporary repairs of damaged or missing ladder parts shall not be made.

16.2.3

Wood ground ladders shall be maintained as free of moisture as possible and shall be wiped dry after being sprayed with water or used in the rain.

16.2.4

Ground ladders shall not be painted except for the top and bottom 460 mm (18 in.) of each section for purposes of identification or visibility.

16.2.5*

Pawl assemblies on extension ladders shall be kept clean and lubricated in accordance with the manufacturer's instructions.

16.2.6

Ladder slide areas on extension ladders shall be kept lubricated in accordance with the manufacturer's instructions.

16.2.7*

Halyards and wire rope on extension ladders shall be replaced when they become corroded, frayed, or kinked.

16.2.8

Folding roof hook assemblies on roof ladders shall be kept operational by removing rust and other contaminants and by keeping the mechanisms lubricated.

16.2.9

The surface finish on ground ladders shall be maintained in accordance with the ladder manufacturer's recommendations.

16.2.10 Heat Sensor Labels.

16.2.10.1

If the heat sensor label has an expiration date and that date has passed, or there is no date on the label, the heat sensor label shall be replaced.

16.2.10.2

If the ladder is constructed of metal or fiberglass materials and does not have heat sensor labels, the ladder shall be tested in accordance with Chapter 17.

16.2.10.2.1

If the ladder passes all the tests, heat sensor labels shall be applied to the ladder.

16.2.10.2.2

For all ladders, except folding ladders and multipurpose ladders, the heat sensor labels shall be located on the inside of each beam of each section immediately below the second rung from the tip of each section and in the center of that section.

16.2.10.2.3

For folding ladders, the heat sensor labels shall be permitted to be applied to either the inside or outside of the ladder and shall be located immediately below the second rung from the tip of the ladder and in the center of the ladder.

16.2.10.2.4

For multipurpose ladders, the heat sensor labels shall be located on the inside of each beam of each telescoping section assembly approximately 150 mm (6 in.) below the hinge assembly and also 150 mm (6 in.) from the bottom of each of the sections forming the telescoping section assemblies.

Chapter 17 Service Testing of Ground Ladders (NFPA 1932)

17.1 Requirements for All Ground Ladders.

17.1.1*

The service tests specified in this standard and any additional tests approved by the ground ladder manufacturer shall be the only tests conducted by fire department personnel, or other testing personnel, on in-service fire department ground ladders.

WARNING: Never use test protocols from NFPA 1931 as they will damage the ladder.

WARNING: All inspections outlined in Chapter 16 of this document must be performed prior to the performance of any testing prescribed in Chapter 17 of this document to minimize the possibility of sudden ladder failure due to visual defects or unacceptable conditions.

17.1.2*

The service tests for ground ladders specified in this chapter shall be conducted by the fire department or by an organization that is acceptable to the authority having jurisdiction.

17.1.3*

Personnel performing service tests on ground ladders shall take all possible personal safety precautions.

WARNING: A sudden failure of a ground ladder undergoing service testing could result in personal injury.

17.1.4

All test loads shall be applied to a ladder in a manner so as to avoid any shock or impact loading.

17.1.5

If the ground ladder shows any signs of failure during service testing, it shall be removed from service.

17.1.6

All ground ladders shall be service tested on the following schedule:

(1) Before the ladder is placed in service for the first time

(2) At least annually

(3) At any time a ladder is suspected of being unsafe

(4) After the ladder has been subjected to overloading *(see Table 15.1.3.1)*

(5) After the ladder has been subjected to impact loading or unusual conditions of use

(6)* Whenever the ladder has been exposed or is suspected of having been exposed to direct flame contact

(7) Whenever the heat sensor label has changed to indicate heat exposure

(8) After any repairs have been completed, unless the only repair was replacing the halyard

17.1.6.1

All ground ladders, except pompier ladders and folding ladders, shall be service tested as specified in Section 17.2.

17.1.6.2

Pompier ladders shall be service tested as specified in Section 17.3.

17.1.6.3

Folding and multipurpose ladders shall be service tested as specified in Section 17.4.

17.1.7

All service test results shall be permanently recorded.

17.1.7.1

Minimum information recorded shall be as required in Figure 17.1.7.1.

Figure 17.1.7.1 Sample Fire Department Ground Ladder Test Record.

FIRE DEPARTMENT GROUND LADDER TEST RECORD

Manufacturer's ladder identification number or code _____

Fire department identification (if different) _____

Ground ladder manufacturer _____

Fire department company where ground ladder is assigned _____

Date purchased _____

Date placed in service _____

TYPE OF GROUND LADDER

- ❑ Single
- ❑ Roof
- ❑ Extension
- ❑ Combination
- ❑ Folding
- ❑ Pompier

LADDER CONSTRUCTION

- ❑ Wood
- ❑ Metal
- ❑ Fiberglass
- ❑ Solid beam
- ❑ Truss beam

Heat sensor label inspection _____

Previous repair(s), reason for repair, and date of repair _____

_____

_____

Type of test, test date, and person(s) performing test _____

_____

Reason for test _____

TEST RESULTS

Horizontal bending test	❑ Passed	❑ Failed
Amount of permanent deformation _____		
Hardware test	❑ Passed	❑ Failed
Roof hook test	❑ Passed	❑ Failed
Pompier ladder test	❑ Passed	❑ Failed

Repairs needed _____

_____

Repairs completed _____

_____

Person(s) performing repairs _____

Date completed _____

Person signing record _____

NFPA 1930

17.1.7.2

These records shall be retained by the AHJ for the life of the ladder.

17.1.8

If the ground ladder does not meet the requirements of this chapter, the ladder shall be removed from service.

17.1.8.1*

The ground ladder shall be obviously marked as “out of service” with the date and a description of the defect that required the ladder to be removed from service.

17.1.8.2

The ladder shall be repaired in accordance with the manufacturer’s instructions, and service tested in accordance with Section 17.2, Section 17.3, or Section 17.4 as applicable, before it is returned to service, or it shall be destroyed.

17.2 Service Testing Requirements for All Ladders Except Pompier, Multipurpose, and Folding Ladders.

17.2.1* Horizontal Bending Test.

17.2.1.1 Ladder Test Setup.

The ladder shall be placed in a flat horizontal position and supported 150 mm (6 in.) from each end of the ladder, as shown in Figure 17.2.1.1.

Figure 17.2.1.1 Extension Ladder Positioned for Horizontal Bending Test.

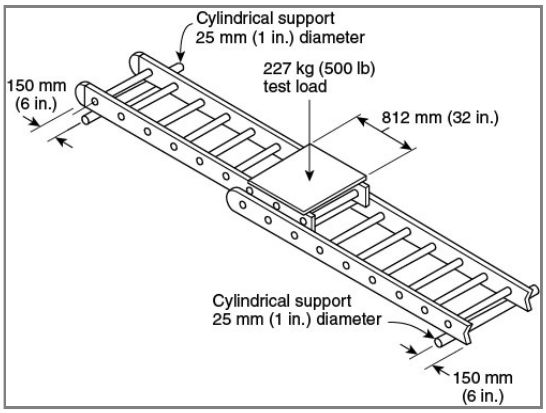

17.2.1.1.1

The supports shall be high enough that the ladder does not touch the floor or other surface during the test.

17.2.1.1.2

The ladder shall not be tied, strapped, or otherwise fastened to the supports.

17.2.1.2 Load Tests.

All test loads shall be applied equally across the beams of the ladder and 406 mm (16 in.) each side of the lengthwise center inclusive and as follows:

(1) If free weights are used, the test load shall be applied in increments consistent with safety and ease of handling to a flat test surface resting on the beams.

(2) If a test fixture is used with a dynamometer, the test fixture shall be designed to apply the test load over the required area in a manner that allows a load shift to a weak beam and does not restrain the load directionally.

(3) All test loads shall include the weight of the test surface.

17.2.1.3 Extension and Combination Ladders.

17.2.1.3.1

Extension and combination ladders shall be extended to their maximum extended length, with pawls engaged.

17.2.1.3.2

Straps or other ties that do not increase the strength of the ladder shall be permitted to be used to ensure that the ladder pawls remain engaged during the test.

17.2.1.4 Metal and Fiberglass Ground Ladders.

Metal and fiberglass ground ladders shall be tested as follows:

(1) The ladder shall be loaded with a preload of 159 kg (350 lb) that shall remain in place for at least 1 minute to “set” the ladder prior to the completion of the rest of the test.

(2) The preload shall be removed, and the distance between the bottom edge of each beam and the surface upon which the ladder supports are placed shall be measured at the lengthwise center of the ladder.

(3) The ladder shall be loaded with a test load of 227 kg (500 lb) that shall remain in place for 5 minutes.

(4)* The test load shall be removed and the ladder allowed to rest for up to 5 minutes, unless it recovers sooner.

(5) The distance between the bottom of each beam and the surface upon which the ladder supports are placed shall be measured at the same spot that the measurements were taken in 17.2.1.4(2).

(6) Differences in measurements taken in 17.2.1.4(2) and 17.2.1.4(5) shall not exceed those values shown in Table 17.2.1.4.

(7) There shall be no visible permanent change or failure of any hardware.

(8) Any ladder that exceeds the allowable difference in horizontal bending test recovery, has visible permanent change, or has failure of any hardware shall be removed from service.

Table 17.2.1.4 Allowable Differences in Horizontal Bending Test Recovery

Designated Length of Ladder		Difference in Measurements	
m	ft	mm	in.
7.6 or less	25 or less	12.7	½
7.7–10.4	26–34	25.4	1
10.5 or over	35 or over	38.1	1 ½

17.2.1.5 Wood Ground Ladders.

Wood ground ladders shall be tested as follows:

(1) The ladder shall be loaded with a test load of 227 kg (500 lb) that shall remain in place for 5 minutes and then be removed.

(2) To pass the test, the ladder and its components shall not show ultimate failure.

(3) Any ladder that does not meet the criterion of 17.2.1.5(2) shall be removed from service.

(4) Extension ladders shall be extended and retracted their entire length with no interference to operation.

17.2.2 Test Procedure for Roof Hooks.

If the ladder is equipped with roof hooks, the roof hooks shall be tested as follows:

(1) Variations of the specific roof hook testing method depicted in 17.2.2(2) through 17.2.2(6) shall be permitted provided they are consistent with the intent of this test method, are acceptable to the authority having jurisdiction, and provide equivalent results.

(2) The ladder shall be positioned for testing as follows and shall be tested as shown in Figure 17.2.2.

(a) The ladder shall be hung solely by the roof hooks, with the hooks supported only by the points of the hooks, in a vertical position from a fixture that is capable of supporting the entire test load and weight of the ladder.

(b) The ladder shall be secured in such a manner as to retain the ladder in the test position to prevent injury to test personnel if the hooks fail during the test.

(3) A test load of 454 kg (1000 lb) in weight increments that are consistent with safety and ease of handling shall be placed over as many rungs as needed.

(4) The test load shall be applied for a minimum of 1 minute.

(5)* After removal of the test load, there shall be no permanent deformation.

(6) If there is any indication of permanent deformation, the ladder shall be removed from service.

Figure 17.2.2 Roof Ladder Positioned for Roof Hook Test.

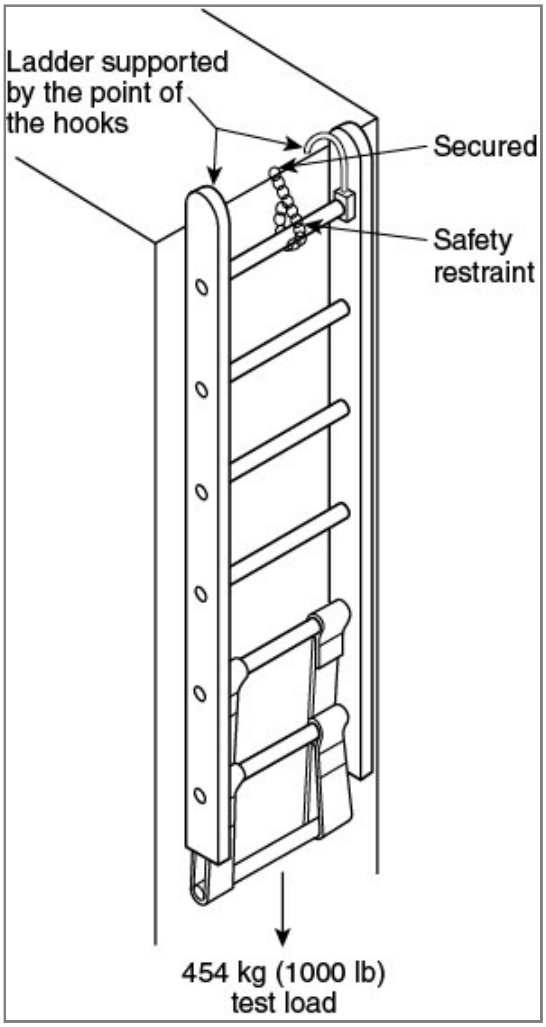

17.2.3 Test Procedure for Extension Ladder Hardware.

If the ladder is an extension ladder, the hardware shall be tested as follows:

(1) Variations of the specific extension ladder hardware testing method depicted in 17.2.3(2) through 17.2.3(6) shall be permitted provided they are consistent with the intent of this test method, are acceptable to the authority having jurisdiction, and provide equivalent results.

(2) The ladder shall be positioned and tested as shown in Figure 17.2.3 with the ladder extended a minimum of one rung beyond the bedded position.

(3) A test load of 454 kg (1000 lb) in weight increments that are consistent with safety and ease of handling shall be placed on the rungs of the fly section.

(4) The test load shall be applied for a minimum of 1 minute.

(5) Ladders shall sustain this test load with no failure of the hardware and no permanent deformation or other visible damage of the structure.

(6) If there is any failure of the hardware, indication of permanent deformation, or other visible damage, the ladder shall be removed from service.

Figure 17.2.3 Extension Ladder Positioned for Hardware Test.

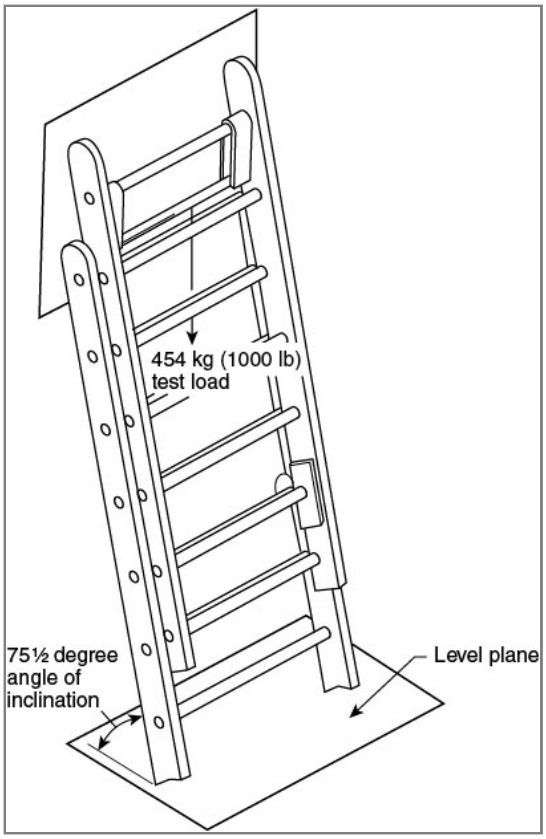

17.3 Service Testing Requirements for Pompier Ladders.

All pompier ladders shall be service tested as follows:

(1) Variations of the specific pompier ladder strength test method depicted in 17.3(2) through 17.3(5) shall be permitted, provided they are consistent with the intent of this test method, are acceptable to the authority having jurisdiction, and provide equivalent results.

(2) The ladder shall be positioned for testing as follows and as shown in Figure 17.3.

(a) The ladder shall be tested in the vertical hanging position, supported only by its hook, from a fixture that is capable of supporting the entire test load and weight of the ladder.

(b) The ladder shall be secured in such a manner as to retain the ladder in the test position in order to prevent injury to test personnel if the hook fails during the test.

(3) A test load of 454 kg (1000 lb) in weight increments that are consistent with safety and ease of handling shall be applied over multiple rungs.

(4) The ladder shall withstand this test without ultimate failure.

(5) If the pompier ladder does not meet the criterion of 17.3(4), it shall be removed from service.

Figure 17.3 Pompier Ladder Positioned for Test.

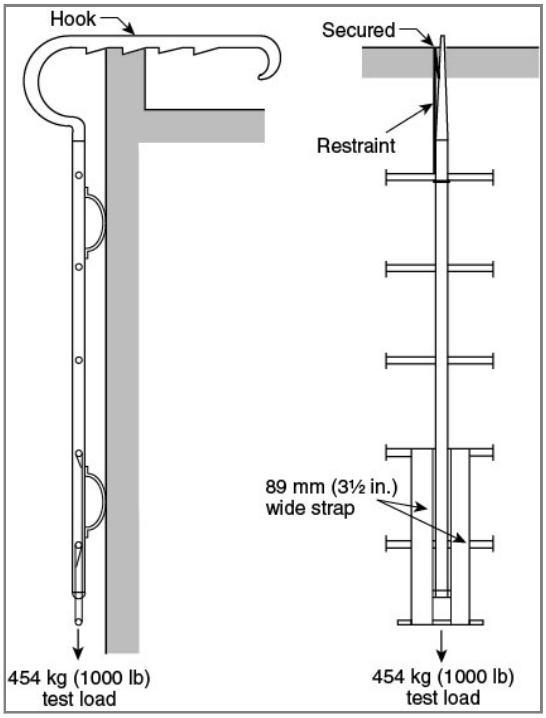

17.4 Service Testing Requirements for Folding and Multipurpose Ladders.

All folding and multipurpose ladders shall be service tested as follows:

(1) The ladder shall be unfolded and extended to its maximum straight length, placed in a flat horizontal position, and supported 150 mm (6 in.) from each end of the ladder as shown in Figure 17.4(a) for a folding ladder or Figure 17.4(b) for a multipurpose ladder.

(2) The supports shall be high enough that the ladder does not touch the floor or other surface during the test.

(3) The ladder shall not be tied, strapped, or otherwise fastened to the supports.

(4) All test loads shall be applied equally across the beams of the ladder and 203 mm (8 in.) each side of the lengthwise center inclusive.

(5) If free weights are used, they shall be applied in increments consistent with safety and ease of handling to a flat test surface resting on the beams.

(6) If a test fixture is used with a dynamometer, the test fixture shall be designed to apply the load over the required area in a manner that allows a load shift to a weak beam and does not restrain the load directionally.

(7) All test loads shall include the weight of the test surface.

Figure 17.4(a) Folding Ladder Positioned for Horizontal Bending Test.

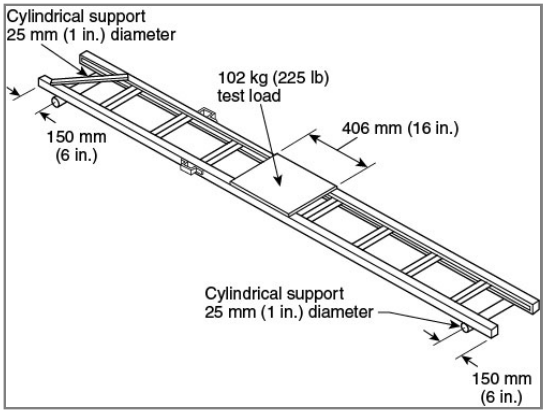

Figure 17.4(b) Multipurpose Ladder Positioned for Horizontal Bending Test.

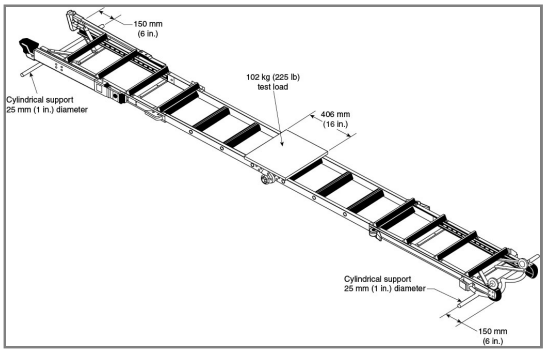

17.4.1 Metal and Fiberglass Folding and Multipurpose Ladders.

Metal and fiberglass folding and multipurpose ladders shall be service tested as follows:

(1) The ladder shall be loaded with a preload of 73 kg (160 lb).

(2) The preload shall be allowed to remain for at least 1 minute to “set” the ladder prior to completing the rest of the test.

(3) After the preload is removed, the distance between the bottom edge of each beam and the surface upon which the ladder supports are placed shall be measured at the lengthwise center of the ladder.

(4) The ladder shall be loaded with a test load of 102 kg (225 lb).

(5) The test load shall remain in place for 5 minutes.

(6)* After the test load is removed, the ladder shall be allowed to rest up to 5 minutes, unless it recovers sooner.

(7) The distance between the bottom of each beam and the surface upon which the ladder supports are placed shall be measured at the same location the measurements in 17.4.1(3) were taken.

(8) There shall be no more than a 13 mm (0.5 in.) difference between measurements taken in 17.4.1(3) and 17.4.1(7).

(9) There shall be no visible permanent change or failure of any hardware.

(10) The ladder shall be capable of being folded or retracted back to its stowing configuration.

(11) Any ladder that does not meet the test criteria of 17.4.1(8), 17.4.1(9), and 17.4.1(10) shall be removed from service.

(12) If the ladder does not operate properly after a load test, it shall be removed from service.

17.4.2 Wood Folding and Multipurpose Ladders.

Wood folding and multipurpose ladders shall be service tested as follows:

(1) The ladder shall be loaded with a test load of 102 kg (225 lb).

(2) The test load shall remain in place for 5 minutes and then be removed.

(3) The ladder and its components shall not show any permanent damage.

(4) If the ladder does not meet the test criterion of 17.4.2(3), it shall be removed from service.

(5) If the ladder does not operate properly after a load test, it shall be removed from service.

Chapter 18 Program Components (NFPA 1937)

18.1 Administration

18.1.1 Scope.

18.1.1.1

Chapters 18 through 21 shall specify minimum requirements for the selection, care, maintenance, and record keeping of lifting bags and rescue tools that are compliant with NFPA 1936.

18.1.1.2

Chapters 18 through 21 shall not specify requirements for other organizational programs such as the use of lifting bags and rescue tools for training or operations, because these programs are under the jurisdiction of other NFPA standards.

18.1.1.3

Nothing herein shall restrict any jurisdiction from exceeding these minimum requirements.

18.1.2 Purpose.

18.1.2.1

The purpose of Chapters 18 through 21 shall be to establish procedures as part of a program to provide for selection, service, care, maintenance, and record keeping of lifting bags, rescue tools, and components to reduce the potential health and safety risks associated with poorly maintained, contaminated, damaged, or obsolete lifting bags, rescue tools, and components.

18.1.2.2

Chapters 18 through 21 shall also establish basic criteria for the evaluation and selection process associated with purchasing lifting bags and rescue tools to ensure only lifting bags and rescue tools that meet the requirements of NFPA 1936 for use by emergency services organizations are selected.

18.1.2.3

The purpose of Chapters 18 through 21 shall also be to establish that safety is a primary concern for the continued in-service use of lifting bags, rescue tools, and components and that safety is the ultimate factor in the decision to service, maintain, repair, or retire lifting bags, rescue tools, and components from service.

18.1.3 Application.

18.1.3.1

Chapters 18 through 21 shall apply to the requirements for selection, care, maintenance, and the associated record keeping of the lifting bags and rescue tools of the emergency service organization's program as required by NFPA 1936.

18.1.3.2

Chapters 18 through 21 shall apply to the acquisition of new lifting bags, rescue tools, and components and to the preparation of these new lifting bags, rescue tools, and components before they are placed in service.

18.1.3.3

Chapters 18 through 21 shall apply to the organization's existing lifting bags, rescue tools, and components and also apply to the selection process to acquire new lifting bags, rescue tools, and components to augment or replace existing lifting bags, rescue tools, and components.

18.1.3.4

When Chapters 18 through 21 are adopted by an organization or by a jurisdiction, the authority having jurisdiction shall set a date or dates for achieving compliance with the requirements of this standard.

18.1.3.5

The organization or the jurisdiction shall be permitted to establish a phase-in schedule for compliance with specific requirements of this standard.

18.1.3.6

Unless otherwise noted, Chapters 18 through 21 shall apply to lifting bags, rescue tools, and components regardless of year of manufacture, while they are in storage, in service, in use, and after use.

18.1.4 Equivalency.

18.1.4.1

Nothing in this standard shall prevent the use of systems, methods, or devices of equivalent or superior quality, strength, fire resistance, effectiveness, durability, and safety over those prescribed by this standard.

18.1.4.2

Technical documentation shall be submitted to the authority having jurisdiction to demonstrate equivalency.

18.1.4.3

The system, method, or device shall be approved for the intended purpose by the authority having jurisdiction.

18.1.5 Units of Measurement.

In Chapters 18 through 21, metric units of measurement are followed by an equivalent in Imperial units, but only the value that first appears shall be considered as the requirement, since the value in Imperial units could be approximate.

18.2 General.

18.2.1

Emergency services organizations shall have a written program that addresses rescue tools and lifting bags for the members of that organization.

18.2.2

As part of the organization's rescue tool and lifting bag program, the organization shall develop, implement, and apply a program component for the selection, care, maintenance, and record keeping of rescue tools and lifting bags used by the members of the organization.

18.2.3

The program component shall have the following goals:

(1) Provide rescue tools and lifting bags suitable and appropriate for the intended use

(2) Maintain rescue tools and lifting bags in a safe, usable condition to provide the user with safe, usable equipment

(3) Remove from use any rescue tool and lifting bag that could cause or contribute to user injury, illness, or death because of its condition

(4) Replace, repair, or retire such rescue tools and lifting bags described in 18.2.3(3)

(5) Create and maintain record keeping, in accordance with this standard, for rescue tools, lifting bags, and components

18.2.4

The rescue tool and lifting bag selection, care, and maintenance component of the organization's rescue tool and lifting bag program shall be in accordance with Section 18.4.

18.3* Adverse Conditions Involving Rescue Tools and Lifting Bags.

As part of the rescue tool and lifting bag program, the organization shall develop standard operating procedures (SOPs) for a condition or conditions involving rescue tools and lifting bags or rescue tool and lifting bag components that lead(s) to failure, near-failure, or a significant degradation of performance because of normal use.

18.4 Rescue Tool and Lifting Bag Selection, Care, and Maintenance Program Component.

18.4.1

The organization shall develop written SOPs that identify and define the various parts of the organization's lifting bag, rescue tool, and components program and the various roles and responsibilities of the organization and the members.

18.4.2

As part of the rescue tool and lifting bag program, the organization shall develop SOPs for minimizing exposure to contaminated rescue tools and lifting bags.

18.4.2.1

The organization shall define criteria to determine when a rescue tool and lifting bag is contaminated beyond the ability to remedy by cleaning and disinfecting in accordance with Section 20.1.

18.4.2.2

The SOPs shall detail methods for proper disposal of such contaminated rescue tools and lifting bags in accordance with 18.8.2.

18.4.3

The portion of the rescue tool and lifting bag program for the selection of rescue tools and lifting bags shall include the requirements specified in Chapter 19.

18.4.4

The portion of the rescue tool and lifting bag program for the care of rescue tools and lifting bags shall include the requirements specified in Chapter 20.

18.4.5

The portion of the rescue tool and lifting bag program for the maintenance of rescue tools and lifting bags shall include the requirements specified in Chapter 21.

18.4.5.1

As part of the rescue tool and lifting bag program for maintenance, the organization shall have written rescue tool and lifting bag testing procedures as recommended by the manufacturer.

18.4.5.2

As part of the rescue tool and lifting bag program for maintenance, the rescue tool and lifting bag testing procedures shall include but not be limited to the following:

(1) Administration

(2) Testing protocol

(3) Training in use of the rescue tool and lifting bag

(4) Test technician authorization

(5) Record keeping

(6) Test scheduling

(7) Evaluation of the program's effectiveness

18.4.5.3

As part of the rescue tool and lifting bag program for maintenance, the organization shall develop SOPs for the frequency of technician inspection and testing of rescue tools and lifting bags.

18.4.5.3.1

In all cases, the frequency of technician inspection shall be not less than specified in the rescue tool and lifting bag manufacturer's instructions.

18.4.5.3.2

The organization shall also consider factors including but not limited to the following:

(1) Specific manufacturer's instructions related to rescue tool and lifting bag testing

(2) Severity of environment in which the rescue tool and lifting bag is used

(3) Estimated number of uses for each rescue tool and lifting bag

(4) User reports of visual damage of lifting bags

(5) User complaints of improperly functioning rescue tools and lifting bags

(6) Specific worksite issues

18.4.5.4

Where the part of the rescue tool and lifting bag program that addresses the maintenance of rescue tools and lifting bags includes rescue tool and lifting bag technicians who are members of the organization, such technicians shall meet the requirements of Section 18.10.

18.4.6*

The organization shall require that all members who use or are responsible for any part of the organization's rescue tool or lifting bag program are informed and trained not to make any alterations or changes to any rescue tools, lifting bags, or components except to repair or maintain the rescue tools, lifting bags, or components to their original manufacturer specifications and fully functional condition.

18.5 Rescue Tool and Lifting Bag Compliance — Allowance and Retirement.

18.5.1

Rescue tools and lifting bags that are currently in service shall be certified as compliant with NFPA 1936.

18.5.2*

Where currently-in-service rescue tools and lifting bags do not meet the requirements of 18.5.1, such rescue tools and lifting bags shall be retired as specified in 18.8.1.

18.6 Records.

18.6.1

The organization shall create a written procedure to manage the record-keeping system.

18.6.2

The record-keeping system shall accommodate the documents listed in 18.6.6 and all additional documents that are needed after considering the following factors:

(1) Need for the record, report, or document

(2) How the record, report, or document contributes to realizing the organization's goals within the selection, care, and maintenance program component

(3) Number of copies needed

(4) Person(s) responsible for producing the record, report, or document

(5) Format and substance of the record, report, or document

(6) Person(s) who receives, forwards, reviews, processes, and uses the record, report, or document

(7) Disposition of the record, report, or document after it has been completely developed

18.6.3 Legal Counsel.

18.6.3.1

The organization shall consult with legal counsel concerning specific laws that determine the length of time records, reports, and documents shall be retained.

18.6.3.2

The organization shall consult with legal counsel about the form, written or electronic, that is permitted and under what circumstances original or copied documents are needed for various purposes.

18.6.4

The organization shall determine how required records, reports, and documents are created, processed, maintained, and stored and take measures to prevent loss and damage.

18.6.5 Record-Keeping Manager.

The record-keeping system shall be managed by a person who is trained and qualified to ensure that information is obtained, collected, communicated, retrieved, used, and stored according to the plan.

18.6.5.1

The record-keeping manager shall also consider how to reduce waste, redundancy, and cost in the system.

18.6.5.2

The record-keeping manager shall educate and train personnel within the organization in completing, filing, and using various components of the record-keeping system.

18.6.5.3

The record-keeping manager shall be assisted by sufficient staff to fulfill the manager’s duties.

18.6.5.4

The record-keeping manager shall conduct an annual inventory and audit of records, reports, and documents and recommend changes in the record-keeping system as needed.

18.6.6

The organization shall create, maintain, and disseminate the following as required:

(1) Written instructions for care, maintenance, and repair that correspond to those provided by the manufacturer

(2) Written instructions for checks while using rescue tools and lifting bags

(3) Written instructions for inspection, including manufacturer's instructions, to be followed if defects are found

(4) Forms to document the findings during inspection

(5) Forms to record and report defects found during inspections and to track the rescue tool and lifting bag

(6) Forms to document inspections, tests, and repairs by rescue tool and lifting bag users and technicians that shall include the following:

  (a) Make, model, serial number, and other information of rescue tools and lifting bags to identify components

  (b) Documentation of the date, result of the inspection or test, and all actions taken as well as who acted

(7) Written policy and procedure concerning training and authorization of rescue tool and lifting bag technicians as well as documentation of that training and authorization

(8) Written procedures for recording information about the inspection and repair

(9) Stickers, tags, or other similarly effective means to alert users and technicians to defects, document inspections, and certify that tests, repairs, and other actions have been completed

(10) Written procedures for periodic tests and comprehensive inspections that comply with the requirements of this standard

(11) Documentation of the tests to verify rescue tools and lifting bags performance

(12) Schedule for retention, disposition, and disposal of each report, record, and document

(13) Methods of identifying all parts and components of rescue tools and lifting bags so that these can be identified and tracked from initial receipt by the organization until removed from the possession and control of the organization

(14) Documentation when a defective or obsolete rescue tool, lifting bag, or component part is removed from service in accordance with the following:

  (a) Until retirement and disposal of a defective or obsolete rescue tool, lifting bag, or component as specified in 18.8.3, a tag shall be conspicuously placed on the rescue tool, lifting bag, or component.

  (b) The tag shall indicate the date and time the rescue tool, lifting bag, or component was removed from service, by whom, and for what reason.

  (c) Rescue tools, lifting bags, and components that are removed from service shall be stored separately from other rescue tools, lifting bags, and components and secured, as necessary.

  (d) Access to tagged rescue tools, lifting bags, and components shall be limited, and only authorized persons shall remove tags after repair or service.

(15) Records for maintenance of each individual rescue tool, lifting bag, or component will include the following information:

  (a) Manufacturer's serial number or another unique identifier

  (b) Date of manufacture, receipt, service, inspection, test, maintenance, and repair

  (c) Inspections, service, repairs, and tests

  (d) Who performed the work

  (e) Other comments

(16) Records of training provided to each user showing date(s) and subject(s) covered

(17) Such other reports, records, and documents including forms, tags, stickers, and other means necessary to facilitate the purposes of record keeping and the intent of this standard

18.7 Manufacturer's Instructions.

18.7.1

When issuing new rescue tools, lifting bags, and components, the organization shall provide users with the instructions provided by the manufacturer on the care, use, maintenance, and end-of-service life of the rescue tools, lifting bags, and components, including any caution or hazard warnings provided by the manufacturer.

18.7.2

Where the rescue tool, lifting bag, and component manufacturer's instructions regarding the care, use, maintenance, and end-of-service life of the rescue tools, lifting bags, and components differ from the requirements in this standard, the manufacturer's instructions shall be followed except as required in 21.1.2.1.3 and 21.1.2.3.1.

18.8 Retirement and Disposal.

18.8.1

Retired rescue tools and lifting bags shall be destroyed or altered in a manner that ensures they cannot be used as rescue tools and lifting bags.

18.8.2

Where rescue tools, lifting bags, and components are contaminated beyond the ability to be decontaminated and returned to service, such rescue tools, lifting bags, or components shall be destroyed or altered in a manner that ensures they cannot be used.

18.8.2.1

Rescue tools, lifting bags, or components identified in accordance with 18.8.2 as contaminated beyond the ability to decontaminate and return to service shall be segregated from other equipment and personnel and disposed of in a manner consistent with the type of contamination and any governmental regulations governing contaminated item disposal.

18.8.2.2

Prior to disposal, contaminated rescue tools, lifting bags, or components shall be altered in a manner that ensures they cannot be used for any purpose.

18.8.3

Defective or obsolete rescue tools, lifting bags, or components that have been removed from service and cannot be repaired or upgraded shall be dealt with as described in 18.8.1.

18.9 Quality Assurance.

18.9.1

The organization shall establish and maintain a quality assurance plan for selection, care, maintenance, and record keeping of rescue tools, lifting bags, and components.

18.9.2

The quality assurance plan shall be designed to realize all the following goals:

(1) Ensure effective and safe performance of rescue tools and lifting bags provided to users

(2) Substantiate compliance with this standard

(3) Confirm the organization's policies and procedures are being followed

(4) Determine the effectiveness of those policies and procedures

(5) Improve the organization's rescue tool and lifting bag program for selection, care, maintenance, and record keeping of rescue tools, lifting bags, and components.

18.10 Technical Authorization.

18.10.1

Where the portion of the rescue tool and lifting bag program component that addresses the maintenance of rescue tools and lifting bags, as specified in 18.4.6, includes rescue tool and lifting bag technicians that are members of the organization, such technicians shall be qualified and authorized by the rescue tool and lifting bag manufacturer to perform specified allowable maintenance.

18.10.1.1

Allowable maintenance shall include periodic inspection, repair, and overhaul of all rescue tool and lifting bag components and assemblies.

18.10.1.2

Technicians shall also be qualified and authorized in the use of all special tools and equipment required to test and maintain the rescue tool and lifting bag components and assemblies.

18.10.2

The program component shall establish policies and procedures for qualification and selection of personnel for rescue tool and lifting bag technician training and authorization.

18.10.3

The organization shall maintain evidence that all rescue tool and lifting bag technicians that are used by the organization have current authorization by the rescue tool and lifting bag manufacturer and have maintained their level of competency.

Chapter 19 Selection (NFPA 1937)

19.1 Lifting Bags.

19.1.1 Risk Assessment.

19.1.1.1

Prior to starting the procurement process of lifting bags, a risk assessment shall be performed.

19.1.1.2*

The risk assessment shall include, but not be limited to, the expected hazards that can be encountered by users of lifting bags based on the type of duties performed, frequency of use, the organization's experiences, and the organization's geographic location and climatic conditions.

19.1.2 Selection.

19.1.2.1

The organization shall compile and evaluate information on comparative product strengths and weaknesses.

19.1.2.2

The organization shall also consider the following items during the selection process:

(1) Compatibility between users and ease of use

(2) Legibility of remote pressure indicators in reduced visibility

(3) Size and shape

(4) Weight

(5) Rated service time

(6) Environment

(7) Number and complexity of steps involved in operation and maintenance of the lifting bags

(8) Design features that prevent steps from being performed improperly

(9) Operability by user wearing the protective clothing and gloves worn when using lifting bags

(10) Method for uniquely identifying the components of the lifting bag system

(11) Number of spare lifting bags

(12) Lifting bag types

(13) Compatibility of operating air pressures, hose assemblies, and air supply couplings

19.1.2.3

Where a field or laboratory evaluation is conducted, at least the following criteria shall be used to design a systematic evaluation procedure:

(1) An evaluation plan developed by the organization that includes but is not limited to testing prior to and after field evaluations.

(2) Participants for field evaluations selected based on a cross section of personnel, willingness to participate, objectivity, and level of operational activity.

(3) Field evaluations performed by participants on each different lifting bag system being considered from each manufacturer of that particular lifting bag.

(4) A product evaluation form completed for each lifting bag system.

(5) Periodic reports solicited by the organization from participants of the field evaluation.

(6) Conclusions of the evaluation process from the organizations at a specified time and date established by the AHJ, results analysis, and documentation of the results.

19.1.2.4

Purchase specifications shall require evidence that the lifting bags are certified to the current edition NFPA 1936.

19.1.2.5

Where the organization develops purchase specifications, at least the following criteria shall be considered:

(1) All requirements developed by the organization in its evaluations conducted as specified in 19.1.2.1 through 19.1.2.4

(2) User training

(3) Maintenance training

(4) Manufacturer assistance to develop SOPs for maintenance, care, and use

(5) Lifting bag testing on-site prior to acceptance

(6) Maintenance schedule

(7) Complete list of parts

(8) Lifting bag user instruction and service manual

(9) List of any specialized equipment or special tools needed for lifting bag maintenance

(10) List that defines service and maintenance work acceptable for field users to perform and service and maintenance work that requires qualified technicians to perform according to the manufacturer

(11) List of authorized service centers

(12) Warranty statement

(13) Procedures for returning items found defective upon initial receipt

19.1.3 Acceptance.

19.1.3.1

Upon receipt, organizations shall inspect and test purchased lifting bags in accordance with 21.1.1.2.

19.1.3.2

Organizations shall verify that the equipment received is as specified.

19.1.3.3

Procedures shall be established for returning unsatisfactory products if the organization's specifications are not met.

19.1.3.4

Organizations shall review information supplied with the products such as instructions, warranties, and technical data.

19.2 Rescue Tools.

19.2.1 Risk Assessment.

19.2.1.1

Prior to starting the procurement process of powered rescue tools, a risk assessment shall be performed.

19.2.1.2*

The risk assessment shall include, but not be limited to, the expected hazards that can be encountered by users of powered rescue tools based on the type of duties performed, frequency of use, the organization's experiences, and the organization's geographic location and climatic conditions.

19.2.2 Selection.

19.2.2.1

The organization shall compile and evaluate information on comparative product strengths and weaknesses.

19.2.2.2

The organization shall also consider the following items during the selection process:

(1) Capability

(2) Versatility

(3) Ease of use

(4) Environmental capabilities

(5) Size

(6) Power source

(7) Weight

(8) Ease of cleaning and maintenance

(9) Recommended service interval

(10) List that defines service and maintenance work acceptable for field users to perform and service and maintenance work that requires qualified technicians to perform according to the manufacturer

(11) Accessories available

19.2.2.3

Where a field or laboratory evaluation is conducted, at least the following criteria shall be used to design a systematic evaluation procedure:

(1) An evaluation plan developed by the organization that includes but is not limited to testing prior to and after field evaluations.

(2) Participants for field evaluations selected based on a cross section of personnel, willingness to participate, objectivity, and level of operational activity.

(3) Field evaluations performed by participants on each different rescue tool model being considered from each manufacturer of that particular rescue tool.

(4) A product evaluation form completed for each model of rescue tool.

(5) Periodic reports solicited by the organization from evaluation participants in the field evaluation process.

(6) Conclusions of the evaluation process by the organizations at a specified time and date established by the AHJ, results analysis, and documentation of the results.

19.2.2.4

Purchase specifications shall require evidence that the rescue tools to be purchased are certified to NFPA 1936.

19.2.2.5

Where the organization develops purchase specifications, at least the following criteria shall be considered:

(1) All requirements developed by the organization in its evaluations conducted as specified in 19.1.2.1 through 19.1.2.4

(2) User training

(3) Maintenance training

(4) Manufacturer assistance to develop SOPs for maintenance

(5) Maintenance schedule

(6) Complete list of parts

(7) Powered rescue tools user and service manuals

(8) List of any specialized equipment or special tools needed for rescue tools maintenance

(9) List that defines service and maintenance work acceptable for field users to perform and service and maintenance work that requires qualified technicians to perform according to the manufacturer

(10) List of authorized service centers and dealers

(11) Warranty statement

(12) Procedures for returning items found defective upon initial receipt

19.2.3 Acceptance.

19.2.3.1

Upon receipt, organizations shall inspect and test functionality of the rescue tools in accordance with Section 20.2.

19.2.3.2

Organizations shall verify that the equipment received is as specified.

19.2.3.3

Procedures shall be established for returning unsatisfactory products if the organization's specifications are not met.

19.2.3.4

Organizations shall review information supplied with the product such as instructions, warranties, and technical data.

Chapter 20 Care (NFPA 1937)

20.1 Lifting Bags.

20.1.1 Lifting Bag and Lifting Bag Component Cleaning and Disinfecting.

20.1.1.1

The external surfaces of the lifting bags and lifting bag components shall be cleaned and disinfected according to the manufacturer's instructions using only those agents indicated by the manufacturer.

20.1.1.2

All lifting bag components shall be dried after cleaning and prior to storage.

20.1.1.3

Drying shall be done in accordance with manufacturer's instructions and not in direct sunlight.

20.1.1.4

Inspections according to 20.1.1.2 shall be performed after cleaning and drying.

20.1.2 Contamination and Decontamination.

20.1.2.1

Where lifting bags and components are suspected of being contaminated, the lifting bag or component shall be tagged "Contaminated, Out of Service" and segregated from the other equipment and personnel.

20.1.2.2

"Contaminated, Out of Service" tags shall include a space on one side of the tag where written details of the known or suspected contaminant are provided, the incident date is recorded, and the name of the reporting user is provided.

20.1.2.3

Cleaning and decontamination shall be conducted in accordance with the lifting bag and components manufacturer's instructions and AHJ procedures.

20.1.2.4

If cleaning and decontamination are not successful, the lifting bag and components manufacturer shall be contacted for further procedures to be used to decontaminate the lifting bag or components.

20.1.2.5

Where it is determined, in accordance with 20.1.2.4, that the lifting bag or components are beyond the ability to be decontaminated and returned to service, the lifting bag or components shall be disposed of in accordance with 18.8.2.

20.1.3 Storage.

20.1.3.1

All lifting bags and lifting bag components shall be stored according to the manufacturer's specific recommendations.

20.1.3.2

After completion of the inventory check, physical inspection, cleaning, and maintenance checks, the lifting bags and all lifting bag components shall, where possible, be stored on the response vehicle in a manner as determined by the AHJ ensuring lifting bags and all lifting bag components are readily accessible, secured to prevent physical damage, and positioned so no damage is caused by proximity to other equipment.

20.1.4 Labeling.

20.1.4.1

All lifting bag labels shall be kept clean and free of cuts, rips, and other surface damage that make them unreadable.

20.1.4.2

Each lifting bag or lifting bag component that has a label(s) required by this standard shall have that label(s) inspected for visibility, readability, and physical damage.

20.1.4.3

Lifting bags or lifting bag components that do not meet 20.1.4.2 shall be removed from service as stated in 20.1.1.4.

20.2 Rescue Tools.

20.2.1 Inspection.

20.2.1.1

The AHJ shall perform a system inspection and operations check of all components of a rescue tool system after each use, or if not used, on a monthly basis, in accordance with the manufacturer's specific recommendations.

20.2.1.2

The rescue tool inspection shall include the following:

(1) All hoses, couplers, couplings, tools, and power units are visually inspected for issues that include, but are not limited to, the following:

  (a) Leaks, twists, bends, tears, cuts, cracks, nicks, burrs

  (b) Heat and chemical damage

  (c) Wear, rounding of fittings

  (d) Any signs of damage that could impact the function of the rescue tools and components

(2) The couplers are clear of obstructions or damage and function with their mating couplings.

(3) Exterior surfaces of the powered rescue tool are free of cracks and deformation.

(4) All controls and accessories operate as designed.

(5) The electrical contact surfaces are clean and undamaged.

(6) There are no missing, broken, or rusted parts.

(7) There are no missing, torn, or damaged labels.

(8) System readiness indicator(s) — lights, graphic displays — are operational.

20.2.1.3

The end-user care and maintenance check shall include an inventory check, a physical inspection and cleaning check, an operational fit and function check, and a maintenance and minor repair check.

20.2.1.4

The AHJ shall provide a work area that is clean and clear of obstructions and hazards for personnel performing end-user care and maintenance checks.

20.2.1.5

Personnel conducting any of these checks on a rescue tool system shall wear safety apparel and eye protection as approved by the AHJ.

20.2.1.6*

The inventory check shall determine if all rescue tools, accessories, and components assigned to a vehicle owned by the AHJ are present and accounted for.

20.2.1.7

Missing items discovered during this inventory check shall be reported to the AHJ through appropriate channels.

20.2.1.8

If the rescue tool fails the inspection for any reason, it shall be removed from service, repaired, and service tested or replaced.

20.2.2 Cleaning.

20.2.2.1

All rescue tools shall be kept clean and free of dust, dirt, grease, oil, or other surface contamination according to the manufacturer's specific instructions.

20.2.2.2

A physical inspection and cleaning of the rescue tools system and components shall be conducted after each use, when a potential problem is suspected, or at a minimum on a monthly basis.

20.2.2.3

The rescue tools and all components shall be visually inspected for overall physical condition and integrity of the tool or component.

20.2.2.4

The exterior surfaces of all rescue tools and components shall be cleaned of all foreign dirt, grit, oil, and grease, wiped down with a lint-free cloth dampened with water, and dried with a lint-free cloth or pressurized air source.

20.2.2.5

Accessory components for use with rescue tools shall be inspected for conditions such as material defects, cuts, tears, wearing, abrasion, and unraveling.

20.2.3 Contamination and Decontamination.

20.2.3.1

Where rescue tools and components are suspected of being contaminated, the rescue tool or component shall be tagged “Contaminated, Out of Service” and segregated from the other equipment and personnel.

20.2.3.2

“Contaminated, Out of Service” tags shall include a space on one side of the tag where written details of the known or suspected contaminant are provided, the incident date is recorded, and the name of the reporting user is provided.

20.2.3.3

Cleaning and decontamination shall be conducted in accordance with the rescue tool and components manufacturer’s instructions and AHJ procedures.

20.2.3.4

If cleaning and decontamination are not successful, the rescue tool and components manufacturer shall be contacted for further procedures to be used to decontaminate the rescue tool or components.

20.2.3.5

Where it is determined, in accordance with 20.2.3.4, that the rescue tool or components are beyond the ability to be decontaminated and returned to service, the rescue tool or components shall be disposed of in accordance with 18.8.2.

20.2.4 Storage.

20.2.4.1

All rescue tools shall be stored according to the manufacturer’s specific recommendations.

20.2.4.2

After completion of the inventory check, physical inspection, cleaning, and maintenance checks, the rescue tools and all components shall, where possible, be stored on the response vehicle in a manner as determined by the AHJ ensuring tools and all components are readily accessible, secured to prevent physical damage, and positioned so no damage is caused by proximity to other equipment.

20.2.5 Couplings.

The replacement of worn or damaged couplings shall be performed according to the manufacturer’s specific instructions.

20.2.6 Labeling.

20.2.6.1

All rescue tool labels shall be kept clean and free of cuts, rips, and other surface damage that make them unreadable.

20.2.6.2

Replacement labels shall be available by the specific manufacturer and applied according to the manufacturer’s instructions.

20.2.6.3

Each rescue tool or rescue tool system component that has a label(s) required by this standard shall have that label(s) inspected for visibility, readability, and/or physical damage.

20.2.6.4

The AHJ shall replace any label(s) required by this standard if determined to be damaged or missing.

Chapter 21 Maintenance (NFPA 1937) Save As Word Show Revisions/Notes Show PI/PC's Quick Print

21.1 Lifting Bags.

21.1.1 User Maintenance.

21.1.1.1 Inspection Frequency.

Inspection of the lifting bag components shall be conducted after every use or monthly at a minimum.

21.1.1.2 Inspection.

21.1.1.2.1

All the following lifting bag components shall be present:

(1) Lifting bags

(2) Controls

(3) Hoses, couplings, and shutoff valves

(4) Regulators

(5) Accessories

21.1.1.2.2

Lifting bag inspection shall include the following:

(1) Material is checked for deterioration, dirt, cracks, tears, holes, pliability, and delamination.

(2) Inlet connection is functional and undamaged.

21.1.1.2.3

Lifting bag component inspection shall include the following:

(1) Gauges, control, actuators for inflation/deflation, and relief valves

(2) All buckles, fasteners, and adjustment straps checked for proper operation

21.1.1.2.4

Hose inspection shall include the following:

(1) Hose checked for cuts, abrasions, bubbling, cracks, heat damage, and chemical damage

(2) External fittings checked for visual signs of damage

(3) Hose checked for tight connections

21.1.1.2.5

Regulator inspection shall include the following:

(1) Regulator controls, where present, checked for damage and proper function

(2) Pressure relief devices checked visually for damage

(3) Housing and components checked for damage

(4) Regulator checked for any unusual sounds such as whistling, chattering, clicking, or rattling during operation

(5) Regulator and pressure relief device checked for proper function when each is operated

21.1.1.2.6

As the final inspection item, the entire lifting bag system shall be checked for pressure retention as prescribed by the manufacturer.

21.1.1.3 Repair.

21.1.1.3.1

Where user repair can be accomplished promptly and replacement items or remedial action are immediately available, the lifting bags shall be permitted to be restored to proper condition and returned to in-service status.

21.1.1.3.2

Where user repair cannot be accomplished promptly or where replacement items or remedial action are not immediately available, the lifting bags shall be tagged out-of-service and removed from the response vehicle or standby location until the user repair can be completed.

21.1.1.3.3

The organization’s personnel shall act as follows:

(1) Follow the organization’s SOPs and the manufacturer’s written instructions for allowable user repairs

(2) Be trained on the specific repair procedures before performing them

21.1.1.3.4

Users shall not perform work beyond the limits of the organization’s SOPs and their training and not exceed what is allowed by the manufacturer’s written instructions.

21.1.1.3.5

All repairs shall be done with the proper tools, parts, and equipment as specified by the manufacturer.

21.1.1.3.6

After repairs are completed, the user shall conduct the applicable inspection as specified in 21.1.1.2 to verify proper function of the lifting bag system and/or test in accordance with 21.1.2.3 if applicable.

21.1.1.4 Removal from Service.

21.1.1.4.1

Where a condition exists that is beyond user repair in accordance with 21.1.1.3, or the lifting bag is suspected to be in an unsafe condition, the lifting bag shall be removed from service, tagged, and referred to personnel responsible for technical maintenance.

21.1.1.4.2

Any lifting bag or lifting bag component being taken out of service shall be tagged as specified in 18.6.6(14).

21.1.1.4.3

In addition, the tag shall be identified using an affixed distinctive color sign with the words “Out of Service” printed on the tag.

21.1.1.4.4

Where a condition exists that is beyond the user repair in accordance with 21.1.1.4.1, or the lifting bag is suspected to be in an unsafe condition, the lifting bag shall be removed from service, tagged, and referred to personnel responsible for technical maintenance.

21.1.2 Technician Maintenance.

21.1.2.1 Inspection Frequency.

21.1.2.1.1

The technician shall perform the inspection specified in 21.1.1.2 upon receipt of any lifting bag removed from service.

21.1.2.1.2

The technician shall perform the inspection specified in 21.1.1.2 and the testing specified in 21.1.2.3 prior to returning any lifting bags to service.

21.1.2.1.3

The lifting bags shall be tested annually by a technician certified to perform at that level through advanced training and education from the manufacturer.

21.1.2.1.4

The frequency of technician inspection and testing of lifting bags shall be conducted in accordance with the organization’s SOPs as specified in 18.4.5.3.

21.1.2.1.5

The organization shall test all newly purchased lifting bags as specified in 21.1.2.3 prior to putting the lifting bags in service.

21.1.2.2 Inspection.

21.1.2.2.1

Technicians shall perform the level of inspection for which they have been trained and qualified to conduct by the lifting bag manufacturer.

21.1.2.2.2

Where a lifting bag is removed from service in accordance with 21.1.1.4, the technician shall verify the user-reported condition.

21.1.2.2.3

Where the user-reported condition is verified by the technician, the technician then shall determine the action to be taken to repair, return to service, or retire the lifting bags or lifting bag component(s).

21.1.2.2.4

Where the user-reported condition cannot be substantiated, the technician shall perform a complete lifting bag inspection in accordance with the manufacturer’s instructions.

21.1.2.2.5

Replacement labels shall be available by the specific manufacturer and applied according to the manufacturer’s instructions.

21.1.2.2.6

The AHJ shall replace any label(s) required by this standard if determined to be damaged or missing.

21.1.2.3 Testing.

21.1.2.3.1

The organization responsible for the maintenance of the lifting bags shall perform periodic testing in accordance with the manufacturer's specifications at least annually.

21.1.2.3.2

All equipment used to test lifting bags shall be calibrated in accordance with the test equipment manufacturer's instructions for calibration.

21.1.2.3.2.1

Calibration shall be performed periodically in accordance with the test equipment manufacturer's instructions.

21.1.2.3.2.2*

Test equipment shall be calibrated at least annually.

21.1.2.3.2.3

A label shall be affixed to each piece of test equipment stating the date of the latest calibration and the date of the next scheduled calibration.

21.1.2.3.2.4

Records of calibration results shall be kept on file at the maintenance facility in accordance with Section 18.6.

21.1.2.3.3

If the lifting bag or component uses software in its operation, all manufacturer-recommended software updates shall be performed at a minimum of once per year by a manufacturer-trained and -authorized technician, or other means approved by the manufacturer.

21.1.2.3.4

All lifting bag tests shall be completed as specified by the manufacturer.

21.1.2.4 Repairing and Rebuilding.

21.1.2.4.1

Technicians shall perform the level of repair or re-build for which they have been qualified and are authorized to conduct by the lifting bag manufacturer.

21.1.2.4.2

The replacement of worn or damaged couplings and inlet connections shall be performed according to the manufacturer's specific instructions.

21.1.2.4.3

The technician shall perform the repair or re-build in accordance with the manufacturer's instructions.

21.1.2.4.4

After repair or rebuild, the lifting bag component shall be inspected and tested in accordance with manufacturer's instructions.

21.1.2.5 Removal from Service and Disposition.

Any lifting bags or lifting bag component that is damaged and cannot be repaired shall be removed from service and retired as specified in Section 18.8.

21.2 Rescue Tools.

21.2.1 User Maintenance.

21.2.1.1 Inspection Frequency.

Inspection of the rescue tool and components shall be conducted after every use or monthly at a minimum.

21.2.1.2 Inspection.

21.2.1.2.1

Rescue tool inspection shall include the following:

(1) Tool is checked for damage, deterioration, dirt, cracks, tears, and leaks.

(2) Couplers and connection points for hoses (if applicable) are functional and undamaged.

(3) Battery connection points (if applicable) are functional and undamaged.

(4) Operational controls are free of dirt and debris and function properly.

(5) Handles are functional and securely attached to the tool.

(6) Blades and tips and other parts prone to wear are functional and securely mounted.

21.2.1.2.2

Rescue tool component inspection shall include the following:

(1) Power source is checked for damage, deterioration, dirt, cracks, tears, and leaks.

(2) Hoses are checked for cuts, kinks, abrasions, cracks, delamination, and heat damage.

(3) Batteries are checked for damage, cracks, and leaking.

21.2.1.2.3

As the final inspection item, the entire rescue tool system shall be checked for proper opening and closing operation as prescribed by the manufacturer.

21.2.1.3 Repair.

21.2.1.3.1

Where the user has completed manufacturer recommended service and repair training and repair can be accomplished promptly and replacement items or remedial action is immediately available, the rescue tool shall be permitted to be restored to proper condition and returned to in-service status.

21.2.1.3.2

Where user repair cannot be accomplished promptly or where replacement items or remedial action is not immediately available, the rescue tools shall be tagged out of service and removed from the response vehicle or standby location until the repair can be completed.

21.2.1.3.3

The organization's personnel shall act as follows:

(1) Follow the organization's SOPs and the manufacturer's written instructions for allowable user repairs

(2) Be trained by the manufacturer on the specific repair procedures before performing them

21.2.1.3.4

Users shall not perform work beyond the limits of the organization's SOPs and their training and not exceed what is allowed by the manufacturer's written instructions.

21.2.1.3.5

All repairs shall be done with the proper tools, parts, and equipment as specified by the manufacturer.

21.2.1.3.6

After repairs are completed, the user shall conduct the applicable inspection as specified in 21.2.1.2 to verify proper function of the rescue tool and test in accordance with 21.2.2.3 if applicable.

21.2.1.3.7

The replacement of worn or damaged couplings and inlet connections shall be performed according to the manufacturer's specific instructions.

21.2.1.4 Removal from Service.

21.2.1.4.1

Where a condition exists that is beyond user repair in accordance with 21.2.1.3, or the rescue tool is suspected to be in an unsafe condition, the rescue tool shall be removed from service, tagged out of service, and referred to personnel responsible for technical maintenance.

21.2.1.4.2

Any rescue tool or rescue tool component being taken out of service shall be tagged as specified in 18.6.6(14).

21.2.1.4.3

In addition, the tag shall be identified using an affixed distinctive color sign with the words "Out of Service" printed on the tag.

21.2.1.4.4

Where a condition exists that is beyond the user repair in accordance with 21.2.1.4.1, or the rescue tool or component is suspected to be in an unsafe condition, the rescue tool or component shall be removed from service, tagged, and referred to personnel responsible for technical maintenance.

21.2.2 Technician Maintenance.

21.2.2.1 Inspection Frequency.

21.2.2.1.1

The technician shall perform the inspection specified in 21.2.1.2 upon receipt of any rescue tool removed from service.

21.2.2.1.2

The technician shall perform the inspection specified in 21.2.1.2 and the testing specified in 21.2.2.3 prior to returning any rescue tool to service.

21.2.2.1.3

The rescue tool shall be tested monthly in accordance with the manufacturer's recommendation.

21.2.2.1.4

The frequency of technician inspection and testing of rescue tools shall be conducted in accordance with the organization's SOPs developed as specified in 18.4.5.3.

21.2.2.1.5

The organization shall test all newly purchased rescue tools as specified in 21.2.2.3 prior to putting rescue tools in service.

21.2.2.2 Inspection.

21.2.2.2.1

Technicians shall only perform the level of inspection for which they have been trained and qualified to conduct by the rescue tool manufacturer.

21.2.2.2.2

Where a rescue tool is removed from service in accordance with 21.2.1.4, the technician shall verify the user-reported condition.

21.2.2.2.3

Where the user-reported condition is verified by the technician, the technician shall determine the action to be taken to repair, return to service, or retire the rescue tool or rescue tool component(s).

21.2.2.2.4

Where the user-reported condition cannot be substantiated, the technician shall perform a complete rescue tool inspection and functional test in accordance with the manufacturer's instructions.

21.2.2.2.4.1

Where the user-reported condition cannot be substantiated by the technician, and the technician has performed the tool inspection and functional test in accordance with 21.2.2.2.4 and the tool performs in accordance with the manufacturer's specifications, the tool shall be returned to service.

21.2.2.2.5

The following power unit maintenance shall be performed annually at a minimum and by personnel qualified as technician level by the manufacturer in this order:

(1) Power units to be free of damage to the prime mover, frame, and connections.

(2) Power units to be operated at the rated system input for the specified power unit.

(3) Output safety pressure relief valves or automatic limiting devices to be checked to ensure operation at appropriate pressures per manufacturer's recommendation.

(4) Rated system input to be maintained for no less than 30 seconds.

(5) Pressure fluctuations during the 30 second test to be not more than ±5 percent of the rated system input.

(6) Power units to be checked during and immediately after pressure tests to check for leaks or malfunction.

(7) Power units to be connected to a rescue tool via hose and hose assembly and directional valves checked for proper operation.

21.2.2.2.6

Replacement labels shall be available by the specific manufacturer and applied according to the manufacturer's instructions.

21.2.2.2.7

The AHJ shall replace any label(s) required by this standard if determined to be damaged or missing.

21.2.2.3 Testing.

21.2.2.3.1

The organization responsible for the maintenance of the rescue tools shall perform periodic testing in accordance with the manufacturer's specifications.

21.2.2.3.2

In addition, the rescue tool system(s) shall be tested annually by a manufacturer-trained and -authorized technician to confirm tool or component performance as specified by the manufacturer.

21.2.2.3.3

If the tool or component uses software in its operation, all manufacturer-recommended software updates shall be performed at a minimum of once per year by a manufacturer-trained and -authorized technician, or other means approved by the manufacturer.

21.2.2.3.4

All equipment used to test rescue tools shall be calibrated in accordance with the test equipment manufacturer's instructions for calibration.

21.2.2.3.4.1

Calibration shall be performed periodically in accordance with the test equipment manufacturer's instructions.

21.2.2.3.4.2*

Test equipment shall be calibrated annually at a minimum.

21.2.2.3.4.3

A label shall be affixed to each piece of test equipment stating the date of the latest calibration and the date of the next scheduled calibration.

21.2.2.3.4.4

Records of calibration results shall be kept on file at the maintenance facility in accordance with Section 18.6.

21.2.2.3.5

All rescue tool tests shall be completed as specified by the manufacturer.

21.2.2.4 Repairing and Rebuilding.

21.2.2.4.1

Technicians shall only perform the level of repair or rebuild for which they have been trained and qualified and are authorized by the rescue tool manufacturer.

21.2.2.4.2

The technician shall perform the repair or rebuild in accordance with the manufacturer's instructions.

21.2.2.4.3

After repair or rebuild, the rescue tool or rescue tool component shall be inspected and tested in accordance with manufacturer's instructions.

21.2.2.5 Removal from Service and Disposition.

Any rescue tool or rescue tool component that is damaged and cannot be repaired shall be removed from service and retired as specified in Section 18.8.

Chapter 22 Care, Use, Inspection, Service Testing, and Replacement of Fire Hose (NFPA 1962) Save As Word Show Revisions/Notes Show PI/PC's Quick Print

22.1 Administration.

22.1.1 Scope.

Chapters 22 through 26 covers the care, use, inspection, service testing, and replacement of fire hose, fire hose couplings, firefighting nozzles, and fire hose appliances, and the associated record keeping.

22.1.2 Purpose.

22.1.2.1

The purpose of Chapters 22 through 26 is to provide requirements for the care, use, inspection, service testing, and replacement of fire hose, fire hose couplings, nozzles, and fire hose appliances so that the reliability of fire hose, nozzles, and fire hose appliances is increased when they are used at an incident.

22.1.2.2

The purpose of Chapters 22 through 26 is also to establish that safety is a primary concern for the continued in-service use of fire hose, fire hose couplings, nozzles, and fire hose appliances and that safety is the ultimate decision to retire fire hose, fire hose couplings, nozzles, and fire hose appliances.

22.1.3 Application.

Unless otherwise noted, Chapters 22 through 26 shall apply to fire hose, fire hose coupling assemblies, nozzles, and fire hose appliances, regardless of year of manufacture, while they are in storage, in service, in use, and after use.

22.1.4 Equivalency.

Nothing in this standard shall prevent the use of systems, methods, or devices of equivalent or superior quality, strength, fire resistance, effectiveness, durability, and safety over those prescribed by this standard. Technical documentation shall be submitted to the authority having jurisdiction to demonstrate equivalency. The system, method, or device shall be approved for the intended purpose by the authority having jurisdiction.

22.1.5* Units of Measurement.

In Chapters 22 through 26, inch-pound units for measurement are followed by an equivalent in metric units, but only the value that first appears shall be considered as the requirement, since the value in metric units could be approximate.

22.2 Attack Hose, Supply Hose, and Forestry Hose.

22.2.1

Hose shall be inspected in accordance with Section 22.6 when it is placed in service.

22.2.2*

Hose that is in service shall be service tested as specified in Section 22.9 at least annually.

22.2.3

New hose shall be service tested in accordance with Section 22.9 prior to being placed in service for the first time and annually.

22.2.4

Hose held in storage for longer than 1 year shall be service tested in accordance with Section 22.9 before it is placed in service.

22.2.5*

Only clean, dry hose shall be placed in service.

22.2.6*

Hose carried on fire apparatus shall be loaded in such a way that air can circulate under the hose load to eliminate or reduce the growth of mildew in the hose jackets and rust and corrosion in the hose compartment.

22.2.7*

Hose shall be removed from the apparatus and reloaded so that the folds occur at different positions with sufficient frequency to prevent damage and the setting of permanent folds in the rubber lining.

22.2.8

Large-diameter hose used to supply a pump from a hydrant shall be protected from chafing with chafing blocks or similar protection where it comes in contact with pavement or curbing.

22.2.9

When connecting a pump to a hydrant, the hose shall be bent slightly to avoid kinks when the water is turned on.

22.2.10 Supply Hose.

22.2.10.1*

Hose marked SUPPLY HOSE shall not be used at operating pressures exceeding 185 psi (12.8 bar or 1275 kPa).

22.2.10.2* Discharge Relief Devices.

22.2.10.2.1*

A relief or pressure control device shall be used on the discharge side of the pump when pumping into supply hose.

22.2.10.2.2

The relief device shall be set so that the discharge pressure does not exceed the service test pressure of the hose being used.

22.2.10.2.3

The relief or pressure control device shall be capable of controlling the discharge pressure below the service test pressure as specified in 22.9.2.2.

22.2.10.3

Only slow-operating valves shall be used with supply hose.

22.2.10.4 Relay Operations.

22.2.10.4.1

Where supply hose is used in relay operations between pumps on fire department apparatus, the intake of each receiving pump shall be equipped with a relief valve.

22.2.10.4.2

The maximum pressure setting of the relief valve(s) shall be not more than 10 psi (0.7 bar or 69 kPa) over the static pressure of the water source to which it is connected or not more than 10 psi (0.7 bar or 69 kPa) over the discharge pressure of the supply pump in the relay.

22.2.10.4.3

In no event shall the relief valve be set to relieve at a pressure that exceeds 90 percent of the service test pressure of the hose used with the system.

22.2.11 Damage Prevention.

22.2.11.1*

Hose, while in use, shall be positioned to minimize mechanical damage and heat exposure.

22.2.11.2*

Vehicles shall not be driven over charged or uncharged fire hose unless the hose is bridged and the vehicle has sufficient ground clearance to cross the bridged hose.

22.2.11.3*

Nozzles and valves shall be opened and closed slowly to prevent pressure surges and water hammer that can burst the hose and in turn cause injury to people or damage to the pump.

22.2.11.4

Care shall be taken to prevent the hose from chafing.

22.2.11.5

Care shall be taken to avoid dragging large-diameter fire hose, but if the hose must be dragged, it shall be dragged when flat.

22.2.11.6*

When hose is in use during subfreezing weather, care shall be taken to prevent water from freezing inside the hose.

22.2.11.6.1

To help prevent freezing once the water is turned on, some water shall be left running through the hose.

22.2.11.6.2

When the hose line is no longer needed, it shall be uncoupled and drained before the water freezes.

22.2.12*

Hose that has frozen during use shall be thawed and service tested as specified in Section 22.9 before being put back in service or in storage.

22.2.13*

After each use and before being placed in storage or back in service, the hose shall be drained, cleaned, dried, and inspected as specified in Sections 22.6 and 22.7.

22.3* Occupant-Use Hose.

22.3.1

Occupant-use hose shall be inspected in accordance with Section 22.6 when it is placed in service.

22.3.2

In-service hose designed for occupant use only shall be removed and service tested as specified in Section 22.9 at intervals not exceeding 5 years after the date of manufacture and every 3 years thereafter.

22.3.3

When hose is taken out of service for testing, replacement hose shall be installed on the rack, on the reel, or in the storage area until the tested hose is returned to service.

22.3.4

In-service hose shall be unracked, unreeled, or unrolled and physically inspected as specified in Section 22.6 at least annually. The hose shall be reracked, rereeled, or rerolled so that any folds do not occur at the same position on the hose.

22.3.5 Damage Prevention.

22.3.5.1*

Hose stored on racks or reels shall be protected from the weather and any local environmental condition potentially harmful to the hose.

22.3.5.2

Hose shall be protected from mechanical damage and exposure to heat.

22.3.5.3*

Enclosures for occupant-use hose shall be constructed and the hose stored in accordance with NFPA 24.

22.3.6

In areas where rodents can pose a problem, the hose shall be visually inspected more frequently for rodent damage.

22.3.7

After each use and before being placed back in service, the hose shall be inspected as specified in Section 22.6, service tested as specified in Section 22.9, and cleaned and dried as specified in Section 22.7.

22.4 Booster Hose.

22.4.1

Booster hose shall be inspected in accordance with Section 22.6 when it is placed in service.

22.4.2

Booster hose that is in service shall be service tested as specified in Section 22.10 at least annually.

22.4.3

Booster hose shall be service tested in accordance with Section 22.10 the later of 1 year after its date of manufacture or before it is placed in service for the first time.

22.4.4

Booster hose held in storage for longer than 1 year shall be service tested in accordance with Section 22.10 before it is placed in service.

22.4.5*

Hose shall be stored out of direct sunlight and as recommended by the manufacturer.

22.4.6

Hose shall not be stored kinked and, if stored on a reel, care shall be taken to avoid twisting the hose when rolling it onto the reel.

22.4.7

Covered hose that has exposed reinforcement either shall be removed from service, repaired, and service tested or shall be condemned.

22.5 Suction Hose.

22.5.1

Suction hose shall be inspected in accordance with Section 22.6 when it is placed in service.

22.5.2

Suction hose that is in service shall be service tested as specified in Section 22.11 at least annually.

22.5.3*

Hose shall be stored out of direct sunlight and as recommended by the manufacturer.

22.5.4

Hose that has exposed or damaged reinforcement either shall be removed from service, repaired, and service tested or shall be condemned.

22.5.5

Foreign objects of any kind, including items of equipment, shall not be carried inside the hose.

22.5.6*

Suction hose shall not be used under positive pressure unless it has been specifically designed for such use.

22.6 Hose Inspection.

22.6.1

Physical inspection shall determine if the hose and fire hose couplings have been vandalized, are free of debris, and exhibit no evidence of mildew, rot, or damage by chemicals, burns, cuts, abrasion, and vermin.

22.6.2

During the inspection, a check shall be made to determine if the service test of the hose is current.

22.6.3 Liner Inspection.

22.6.3.1

The interior of the hose at each end shall be visually inspected for any physical signs of liner delamination.

22.6.3.2*

If the liner shows signs of delamination, the hose shall be condemned.

22.6.4

If the hose fails the physical inspection *(see 22.5.1)*, it shall be removed from service and either repaired as necessary and service-tested as specified in Section 22.9, Section 22.10, or Section 22.11 as appropriate or condemned.

22.6.5

The fire hose couplings shall be inspected as specified in 25.1.3 and 25.1.4.

22.6.6

Where nozzles are required on occupant-use hose, they shall be inspected as specified in Section 23.2.

22.7 Cleaning and Drying.

22.7.1*

After each use, all hose shall be cleaned.

22.7.2

If dirt cannot be thoroughly brushed from the hose or if the hose has come in contact with harmful materials, the hose shall be washed.

22.7.3

If, during use, the hose has been contaminated, it shall be decontaminated by the method approved for the contaminant.

22.7.4

Covered hose shall be permitted to be wiped dry.

22.7.5*

Hose shall not be dried on hot pavements or under intense sunlight.

22.8* Storage.

22.8.1

Hose shall be kept out of direct sunlight and in a well-ventilated location.

22.8.2

All hose shall be drained and thoroughly dried before being placed in storage.

22.8.3

Hose shall be stored only after it has been inspected in accordance with Section 22.6 and has been cleaned and dried.

22.8.4

Hose that is out of service for repair shall be tagged as specified in 22.12.1.6 and 22.12.3.6 and kept separated from any hose in storage that is ready for service.

22.9 Service Testing Attack, Supply, Forestry Hose, and Occupant-Use Hose.

22.9.1

Hose manufactured prior to July 1987 to meet the requirements of the 1979 and previous editions of NFPA 1961 shall be removed from service.

22.9.2*

Hose manufactured during July 1987 or after that date to the 1987 or subsequent editions of NFPA 1961 shall be service tested as specified in Section 22.9.

22.9.2.1

Attack fire hose shall be service tested to a minimum of 300 psi (20.7 bar or 2070 kPa) or a pressure not to exceed the service test pressure marked on the hose.

22.9.2.2

Supply fire hose shall be service tested to a minimum of 200 psi (13.8 bar or 1380 kPa) or a pressure not to exceed the service test pressure marked on the hose.

22.9.2.3

Forestry fire hose shall be service tested to a minimum of 300 psi (20.7 bar or 2070 kPa) or a pressure not to exceed the service test pressure marked on the hose.

22.9.2.4

Occupant-use hose shall be tested to the service test pressure marked on the hose.

22.9.2.5

Proof pressure tests for hoses shall be conducted only at the point of manufacture or at a facility equipped to perform those tests.

22.9.2.6

Tests in the field shall not subject the hose to its proof test pressure.

22.9.3

After the correct service test pressure has been determined for each length of hose to be tested, the service test shall be conducted as specified in 22.8.4.

22.9.4 Service Test Procedure.

22.9.4.1

Each length of hose to be service tested shall be inspected as specified in Section 22.6.

22.9.4.2

Any length of hose that fails the inspection shall be removed from the service test area and repaired as necessary or condemned.

22.9.4.3

All lengths of hose in the same hose line shall be of the same service test pressure.

22.9.4.4*

The total length of any hose line in the hose test layout to be service tested shall not exceed 300 ft (91 m).

22.9.4.5

The hose test layout shall be straight, without kinks or twists.

22.9.4.6*

All 3½ in. (89 mm) and larger diameter hose shall be service tested while lying on a horizontal surface.

22.9.4.7*

A test location shall be selected that allows connection of the hose testing apparatus (pressure source) to a water source.

22.9.4.8*

A hose testing machine, a stationary pump, or a pump on a fire department apparatus shall be used as a pressure source.

22.9.4.8.1

If a hose testing machine is used, the procedure defined in 22.9.5 shall be used.

22.9.4.8.2

If a stationary pump or a pump on a fire department apparatus is used, the procedure defined in 22.9.6 shall be used.

22.9.4.9

At the conclusion of the test, the hose records specified in Section 22.12 shall be updated to indicate the results of the service test for each length of hose tested.

22.9.4.10*

Any hose that fails the inspection defined in Section 22.6, bursts or leaks during the service test, or has fire hose couplings that leak or are otherwise found defective as defined in 25.1.3 shall be tagged as required in 22.12.1.6 or 22.12.3.6 and removed from service.

22.9.4.10.1

If the hose leaks or the hose jacket fails inspection, a distinguishing mark noting the location of the defect(s) shall be placed on the hose.

22.9.4.10.2

If the fire hose couplings fail or are defective, they shall be repaired or replaced.

22.9.4.10.3*

If the hose cannot be repaired, the fire hose couplings shall be removed from both ends.

22.9.4.11

If the hose is repaired, or the fire hose couplings are repaired or replaced, the hose shall be service tested in accordance with Section 22.9 before being placed back in service.

22.9.4.12

After testing, all hose shall be thoroughly cleaned, drained, and dried as specified in Section 22.7 before being placed in service or in storage.

22.9.5 Service Test Using a Hose Testing Machine.

The procedure defined in this subsection shall be used when hose is service tested using a hose testing machine.

WARNING: Because there is a potential for catastrophic failure during the service testing of fire hose, it is vital that safety precautions be taken to prevent exposure of anyone to this danger. Do not deviate from the procedures prescribed herein.

22.9.5.1 Hose Testing Machine Integrity.

The condition of the hose testing machine shall be thoroughly checked daily before each testing session and before the machine is used after being transported to a new testing site.

22.9.5.1.1

The hose testing machine shall be carefully examined for damaged components that might fail during the test.

22.9.5.1.2

If any damage is discovered, the hose testing machine shall not be used until the damaged component(s) is repaired or replaced.

22.9.5.1.3

A pressure leak integrity test shall be performed on the machine to determine whether the pressurized outlet side of the machine and its related components are leak-free.

22.9.5.1.3.1

The fire hose outlet connection(s) of the machine shall be capped or otherwise closed.

22.9.5.1.3.2

Pressure shall be applied through the machine using the integral pump to a level that is 10 percent higher than the highest service test pressure needed for the hose to be tested.

22.9.5.1.3.3

The pressure shall be held for 3 minutes with the pump turned off.

22.9.5.1.3.4

If leaks are detected, the testing machine shall not be used until the leaking component(s) is repaired or replaced.

22.9.5.1.4

The test gauge that is used to read the test pressure shall have been calibrated within the previous 12 months.

22.9.5.1.5

If the hose machine incorporates elevated outlets for water supply that are higher than the inflated diameter of the hose from the testing surface, a means to vent trapped air shall be provided between the hose and the outlet valve.

22.9.5.2 Conducting the Test.

22.9.5.2.1

The test layout shall be connected to the outlet side of the water supply valve on the hose testing machine.

22.9.5.2.2

A test cap with a bleeder valve shall be attached to the far end of each hose line in the test layout. If a test cap is not available, a nozzle with a nontwist shutoff shall be permitted to be used.

22.9.5.2.3

With the test cap valve or the nozzle open, the pressure shall be raised gradually to 45 psi ± 5 psi (3.1 bar ± 0.35 bar or 310 kPa ± 35 kPa).

22.9.5.2.4*

After the hose test layout is full of water, all the air in each hose line shall be exhausted by raising the discharge end of each hose line above the highest point in the system.

WARNING: All air must be removed from the hose before the valve in the test cap or the nozzle is closed and the pressure raised. The development of test pressures introduces the potential for a serious accident if air remains in the system.

22.9.5.2.5

If the hose testing machine incorporates elevated outlets for water supply that are higher than the inflated diameter of the hose from the testing surface, air shall be vented next to the water input end.

22.9.5.2.6

The nozzle or test cap valve shall be closed slowly, and then the outlet water supply valve shall be closed.

22.9.5.2.7*

The hose directly in back of the test cap or the nozzle shall be secured to avoid possible whipping or other uncontrolled reactions in the event of a hose burst.

22.9.5.2.8

With the hose at 45 psi ± 5 psi (3.1 bar ± 0.35 bar or 310 kPa ± 35 kPa), it shall be checked for leakage at each fire hose coupling and the fire hose couplings tightened with a spanner wrench where necessary.

22.9.5.2.9*

Each hose shall then be marked around its full circumference at the end or back of each fire hose coupling or collar to determine, after the hose has been drained, if the fire hose coupling or collar has slipped during the test.

22.9.5.2.10

All personnel other than those persons required to perform the remainder of the procedure shall clear the area.

22.9.5.2.11

The pressure shall be raised slowly at a rate not greater than 15 psi (1 bar or 103 kPa) per second until the service test pressure is attained and then maintained, by pressure boosts if necessary, for the duration of the stabilization period.

22.9.5.2.12

The stabilization period shall be not less than 1 minute per 100 ft (30 m) of hose in the test layout.

22.9.5.2.13

After the stabilization period, the hose test layout shall hold the service test pressure for 3 minutes without further pressure boosts.

22.9.5.2.14

While the hose test layout is at the service test pressure, the hose shall be inspected for leaks.

22.9.5.2.14.1

If the inspecting personnel walk the test layout to inspect for leaks, they shall be at least 15 ft (4.5 m) to the left side of the nearest hose line in the test layout. The left side of the hose line shall be defined as that side that is to the left when facing the free end from the pressure source.

22.9.5.2.14.2

Personnel shall never stand in front of the free end of the hose, on the right side of the hose, or closer than 15 ft (4.5 m) on the left side of the hose, or straddle a hose in the test layout during the test.

22.9.5.2.15

If the hose test layout does not hold the service test pressure for the 3-minute duration, the service test shall be terminated.

22.9.5.2.15.1

The length(s) of hose that leaked shall have failed the test.

22.9.5.2.15.2

The test layout shall be drained and the defective hose removed from the test layout.

22.9.5.2.15.3

The service test shall be restarted beginning with the procedures required in 22.9.5.2.1.

22.9.5.2.16

After 3 minutes at the service test pressure, each test cap or nozzle shall be opened to drain the test layout.

22.9.5.2.17 Fire Hose Coupling Slippage.

22.9.5.2.17.1

The hose and any marks placed on the hose at the back of the fire hose couplings or at external collars shall be observed for fire hose coupling slippage after completion of the service test and after the hose has been drained.

22.9.5.2.17.2

If the hose assembly shows any sign of fire hose coupling slippage, the hose assembly shall have failed the test.

22.9.6 Service Test Using a Stationary Pump or a Pump on a Fire Department Apparatus.

The procedure given in 22.9.6.1 through 22.9.6.16.2 shall be used when hose is to be service-tested using a stationary pump or a pump on a fire department apparatus.

WARNING: Because there is a potential for catastrophic failure during the service testing of fire hose, it is vital that safety precautions be taken to prevent exposure of anyone to this danger. Do not deviate from the procedures prescribed herein.

22.9.6.1

The test gauge that is used to read the test pressure shall have been calibrated within the previous 12 months.

22.9.6.2*

A hose test valve consisting of a fire department gate valve with a ¼ in. (6.4 mm) opening drilled through the gate and designed to withstand the service test pressures shall be used between the pump and the hose test layout.

22.9.6.3

The test layout shall be connected to the hose test valve.

22.9.6.3.1

If a pump on a fire apparatus is used, the hose test valve shall not be attached to any discharge outlet at or adjacent to the pump operator's position.

22.9.6.3.2

The hose test valve end of the hose line shall be secured with a belt tie-in or rope hose tool at a point 10 in. to 15 in. (250 mm to 400 mm) from the fire hose coupling.

22.9.6.4

A test cap with a bleeder valve shall be attached to the far end of each hose line in the test layout. If a test cap is not available, a nozzle with a nontwist shutoff shall be permitted to be used.

22.9.6.5

With the hose test valve open and the test cap valve or nozzle open, the pressure shall be gradually raised to 45 psi ± 5 psi (3.1 bar ± 0.35 bar or 310 kPa ± 35 kPa).

22.9.6.6*

After the hose test layout is full of water, all air in each hose line shall be exhausted by raising the discharge end of each hose line above the highest point in the system.

WARNING: All air must be removed from the hose before the valve in the test cap or the nozzle is closed and the pressure raised. The development of test pressures introduces the potential for a serious accident if air remains in the system.

22.9.6.7

The nozzle or test cap valve shall be closed slowly, and then the hose test valve shall be closed.

22.9.6.8*

The hose directly in back of the test cap or the nozzle shall be secured to avoid possible whipping or other uncontrolled reactions in the event a hose bursts.

22.9.6.9

With the hose at 45 psi ± 5 psi (3.1 bar ± 0.35 bar or 310 kPa ± 35 kPa), it shall be checked for leakage at each fire hose coupling and the fire hose couplings tightened with a spanner wrench where necessary.

22.9.6.10*

Each hose shall then be marked around its full circumference at the end or back of each fire hose coupling or collar to determine, after the hose has been drained, if the fire hose coupling or collar has slipped during the test.

22.9.6.11

All personnel other than those persons required to perform the remainder of the procedure shall clear the area.

22.9.6.12

The pressure shall be raised slowly at a rate not greater than 15 psi (1 bar or 103 kPa) per second until the service test pressure is attained and then maintained for 3 minutes.

22.9.6.13

While the test layout is at the service test pressure, the hose shall be inspected for leaks.

22.9.6.13.1

If the inspecting personnel walk the test layout to inspect for leaks, they shall be at least 15 ft (4.5 m) from either side of the nearest hose line in the test layout.

22.9.6.13.2

Personnel shall never stand in front of the free end of the hose, stand closer than 15 ft (4.5 m) on either side of the hose, or straddle a hose in the test layout during the test.

22.9.6.14

If, during the test, a section of hose is leaking or a section bursts, the service test shall be terminated.

22.9.6.14.1

The length(s) of hose that leaked or burst shall have failed the test.

22.9.6.14.2

The test layout shall be drained and the defective hose removed from the test layout.

22.9.6.14.3

The service test shall be restarted beginning with the procedures required in 22.9.6.3.

22.9.6.15

After 3 minutes at the service test pressure, the pump shall be shut down, the hose test valve opened, the pressure allowed to equalize with the source, the pump discharge gates closed, and each test cap valve or nozzle opened to drain the test layout.

22.9.6.16 Fire Hose Coupling Slippage.

22.9.6.16.1

The hose and any marks placed on the hose at the back of the fire hose couplings or at external collars shall be observed for fire hose coupling slippage after completion of the service test and after the hose has been drained.

22.9.6.16.2

If the hose assembly shows any sign of fire hose coupling slippage, the hose assembly shall have failed the test.

22.10 Service Testing Booster Hose.

22.10.1*

Booster hose shall be tested in accordance with 22.8.4 to 110 percent of its maximum working pressure.

22.10.2

If a maximum working pressure cannot be determined for the hose, it shall be tested to 110 percent of the normal highest working pressure as used in the system.

22.11* Service Testing Suction Hose.

Suction hose shall be dry-vacuum tested using the following procedure:

(1) The test gauge used to read the vacuum shall have been calibrated within the previous 12 months.

(2) The hose shall be attached to a suction source.

(3) The free end shall be sealed with a transparent disk and connected to an accurate vacuum measuring instrument.

(4) A 22 in. mercury (0.75 bar or 74.5 kPa) vacuum shall be developed.

(5) While holding the vacuum for 10 minutes, the interior of the hose shall be inspected through the transparent disk.

(6) There shall be no signs of physical damage or collapse of the lining into the waterway.

22.12 Hose Records.

22.12.1 Attack Hose and Supply Hose Records.

22.12.1.1*

Accurate hose records shall be established and maintained.

22.12.1.2*

Each length of hose shall be assigned an identification number for use in recording its history throughout its service life.

22.12.1.2.1*

The identification number shall be stenciled on the jacket or cover using an ink or paint that is not harmful to the hose.

22.12.1.2.2*

The identification number shall be permitted to be stamped on the bowl or swivel of the female fire hose coupling in a manner that prevents damage to the fire hose coupling.

22.12.1.3*

Records of hose used by fire departments shall be kept as part of the department's or individual company's complete equipment inventory.

22.12.1.4

Records for hose on racks or reels or in enclosures shall be kept at the hose location or at a control location on the premises where the hose is located.

22.12.1.5*

The following information, if applicable, shall be included for each length of hose:

(1) Assigned identification number

(2) Manufacturer and part number

(3) Vendor

(4) Size (internal diameter of waterway)

(5) Length

(6) Type of hose

(7) Construction

(8) Date received and date put in service

(9) Date of each service test and the service test pressure

(10) Repairs and new length if shortened

(11) Actual damage

(12) Exposure to possible damage

(13) Reason removed from service

(14) Reason condemned

(15) Indication that the hose has been removed from service or condemned within the warranty period because of an in-warranty failure

22.12.1.6*

Hose removed from service for repair or because it has been condemned shall be tagged with a distinctive tag with the reason for removal from service noted on the tag.

22.12.1.7

Personnel responsible for the repair and maintenance of fire hose shall ensure that a report of the work performed to repair each length is recorded on the permanent hose record.

22.12.2* Forestry Hose Records.

The authority having jurisdiction shall determine the records necessary to achieve an effective hose management program for forestry hose and implement such a record-keeping system.

22.12.3 Occupant-Use Hose Records.

22.12.3.1

A record for each length of occupant-use hose, whether on a rack or reel or in an enclosure, shall be kept on a tag attached near the female end of the hose.

22.12.3.2

The tag shall be fastened in a manner that does not restrict the hose from deploying properly and will not damage the hose.

22.12.3.3*

The tag shall contain at least the following information for each length of hose:

(1) Manufacturer and part number

(2) Date put in service

(3) Date of each inspection and person/agency performing the inspection

(4) Date of each service test and person/agency performing the service test

22.12.3.4*

An inspection checklist maintained on file or in an electronic method (e.g., bar coding) that provides a permanent record shall be permitted to be used in place of a tag to track inspection and service test data, provided each length of hose is assigned a unique identification number that is fastened to or recorded on the hose or female fire hose coupling and the information required by 22.12.3.3 is recorded.

22.12.3.5*

Where records are kept electronically, the electronic record shall be available at the facility where the hose is in service.

22.12.3.6*

Hose removed from service for repair or because it has been condemned shall be tagged with a distinctive tag, with the reason for removal from service noted on the tag.

22.12.4 Booster Hose Records.

22.12.4.1

Accurate hose records shall be established and maintained.

22.12.4.2

Each length of booster hose shall be assigned an identification number for use in recording its history throughout its service life.

22.12.4.2.1

The identification number shall be stenciled on the jacket or cover using an ink or paint that is not harmful to the hose.

22.12.4.2.2

The identification number shall be permitted to be marked on the bowl or swivel of the female fire hose coupling in a manner that prevents damage to the fire hose coupling.

22.12.4.3

Records of booster hose used by fire departments shall be kept as part of the department's or individual company's complete equipment inventory.

22.12.4.4

Records for booster hose on racks or reels or in enclosures shall be kept at the hose location or at a control location on the premises where the hose is located.

22.12.4.5

The following information, if applicable, shall be included for each length of booster hose:

(1) Assigned identification number

(2) Manufacturer and part number

(3) Vendor

(4) Size (internal diameter of waterway)

(5) Length

(6) Type of hose

(7) Construction

(8) Date received and date put in service

(9) Date of each service test and the service test pressure

(10) Repairs and new length if shortened

(11) Actual damage

(12) Exposure to possible damage

(13) Reason removed from service

(14) Reason condemned

(15) Indication that the hose has been removed from service or condemned within the warranty period because of an in-warranty failure

22.12.4.6

Hose removed from service for repair or because it has been condemned shall be tagged with a distinctive tag with the reason for removal from service noted on the tag.

22.12.4.7

Personnel responsible for the repair and maintenance of fire hose shall ensure that a report of the work performed to repair each length is recorded on the permanent hose record.

22.12.5 Suction Hose Records.

22.12.5.1

Accurate hose records shall be established and maintained.

22.12.5.2

Each length of suction hose shall be assigned an identification number for use in recording its history throughout its service life.

22.12.5.2.1

The identification number shall be stenciled on the jacket or cover using an ink or paint that is not harmful to the hose.

22.12.5.2.2

The identification number shall be permitted to be marked on the bowl or swivel of the female fire hose coupling in a manner that prevents damage to the fire hose coupling.

22.12.5.3

Records of suction hose shall be kept as part of the fire department's or individual company's complete equipment inventory.

22.12.5.4

The following information, if applicable, shall be included for each length of suction hose:

(1) Assigned identification number

(2) Manufacturer and part number

(3) Vendor

(4) Size (internal diameter of waterway)

(5) Length

(6) Type of hose

(7) Construction

(8) Date received and date put in service

(9) Date of each service test and the service test pressure

(10) Repairs and new length if shortened

(11) Actual damage

(12) Exposure to possible damage

(13) Reason removed from service

(14) Reason condemned

(15) Indication that the hose has been removed from service or condemned within the warranty period because of an in-warranty failure

22.12.5.5

Hose removed from service for repair or because it has been condemned shall be tagged with a distinctive tag with the reason for removal from service noted on the tag.

22.12.5.6

Personnel responsible for the repair and maintenance of fire hose shall ensure that a report of the work performed to repair each length is recorded on the permanent hose record.

22.13* Fire Hose Replacement.

Fire hose users and the authority having jurisdiction shall establish a replacement schedule for their fire hose that takes into consideration the use and age of the hose and testing results.

Chapter 23 Care, Use, Inspection, Service Testing, and Replacement of Nozzles (NFPA 1962) Save As Word Show Revisions/Notes Show PI/PC's Quick Print

23.1 Care and Use of Nozzles.

23.1.1

Nozzle valves attached to in-service hose shall be kept in the closed position.

23.1.2

If during use there is an obstruction that cannot be removed by flushing the nozzle, the nozzle shall be taken from the hose line and the obstruction removed through the connection end as soon as is practicable, since any further attempt to force the obstruction out through the tip can damage the nozzle.

23.1.3

Care shall be taken to avoid dents or nicks in nozzle tips, because they can seriously affect the reach of the stream.

23.1.4

To prevent mechanical damage, nozzles shall not be dropped or thrown.

23.1.5

Nozzle control valves shall be opened and closed slowly to eliminate unnecessary strain on the hose and fire hose couplings and reduce pressure surges.

23.1.6*

After each use, all nozzles shall be thoroughly washed and inspected in accordance with Section 23.2 before being placed back in service.

23.1.7

If, during use, the nozzle has been contaminated, it shall be decontaminated by the method approved for the contaminant.

23.1.8

All nozzles shall be maintained in accordance with the nozzle manufacturer's instructions.

23.2 Inspection of Nozzles.

23.2.1

All nozzles shall be inspected after each use and at least annually.

23.2.2

The nozzle inspection shall verify the following:

(1) The waterway is clear of obstructions.

(2) There is no damage to the tip.

(3) All controls and adjustments operate as designed.

(4)* The shutoff valve, if so equipped, operates as designed and closes off the flow completely.

(5) There are no missing or broken parts.

(6) The thread gasket is in good condition in accordance with Section 25.2.

23.2.3

If the nozzle fails the inspection for any reason, it shall be removed from service, repaired and service tested, or replaced.

23.2.4

A nozzle that is out of service for repair shall be tagged as specified in 23.5.5 and kept separated from any nozzle in storage that is ready for service.

23.3 Service Testing of Nozzles.

Each nozzle shall be tested at least as frequently as the hose with which it is used.

23.3.1 Hydrostatic Test.

Each nozzle with a shutoff mechanism shall be hydrostatically tested as specified in 23.3.1.1 through 23.3.1.6.

23.3.1.1

The nozzle being tested shall be mounted in a device capable of holding the nozzle, and the shutoff mechanism shall be closed.

23.3.1.2

A device capable of exerting a hydrostatic pressure of 300 psi (2070 kPa) or 1.5 times the manufacturer's maximum operating pressure, whichever is higher, shall be attached to the nozzle.

23.3.1.3

All air shall be bled from the system.

23.3.1.4

The test gauge used to read the test pressure shall have been calibrated within the previous 12 months.

23.3.1.5

The gauge pressure shall be increased by 50 psi (3.5 bar or 345 kPa) increments, held for 30 seconds at each pressure up to the maximum pressure for which the nozzle is being tested, and then held for 1 minute without leakage.

23.3.1.6

There shall be no sign of leakage through the valve or the shutoff.

23.3.1.7

The maximum leakage allowed through the discharge orifice shall be 12 drops per minute (½ ml/min.).

23.3.2 Flow Test.

23.3.2.1

The nozzle shall be mounted such that the flow rate through the nozzle and the pressure at the inlet to the nozzle can be accurately measured.

23.3.2.2

With the shutoff fully open, the inlet pressure shall be adjusted to the rated pressure, ±2 percent.

23.3.2.3

Basic spray nozzles shall flow no less than the rated flow and no more than 10 percent over the rated flow at the rated pressure in both straight stream and wide-angle spray pattern settings.

23.3.2.4

Constant and select gallonage spray nozzles shall flow no less than the rated flow at the rated pressure and no more than 10 percent over the rated flow at the rated pressure when tested at each predetermined flow selection.

23.3.2.5

Constant pressure (automatic) spray nozzles shall be tested as specified in 23.3.2.5.1 through 23.3.2.5.3.

23.3.2.5.1

The flow shall be increased to the minimum rated flow, and the pressure at that flow shall be recorded.

23.3.2.5.2

The flow rate shall continue to be slowly increased to the maximum rated flow, and the minimum and maximum pressures throughout the flow range shall be recorded.

23.3.2.5.3

Constant pressure (automatic) spray nozzles shall maintain their rated pressure ±15 psi (±1 bar or ±100 kPa) throughout the rated flow range.

23.3.2.6

The valve or shutoff and the pattern adjustment shall be operated through their full range of motion at 100 psi (6.9 bar or 690 kPa) and shall exhibit no signs of leakage, binding, or other problems.

23.3.2.7

If the nozzle does not meet any of the test requirements of Section 23.3, it shall be removed from service, repaired, and retested upon completion of repair.

23.3.2.8

The test gauge used to read the test pressure shall have been calibrated within the previous 12 months.

23.4 Nozzle Replacement.

Nozzle users and the authority having jurisdiction shall establish a replacement schedule for their nozzle that takes into consideration the use and age of the nozzles and testing results.

23.5 Nozzle Records.

23.5.1

A record for each nozzle shall be maintained from the time the nozzle is purchased until it is discarded.

23.5.2

Each nozzle shall be assigned an identification number for use in recording its history throughout its service life.

23.5.3

The identification number shall be marked on the nozzle in a manner that prevents damage to the nozzle or appliance.

23.5.4

The following information, if applicable, shall be included on the record for each nozzle:

(1) Assigned identification number

(2) Manufacturer

(3) Product or model designation

(4) Vendor

(5) Warranty

(6) Hose connection size

(7) Maximum operating pressure

(8) Flow rate or range

(9) Date received and date put in service

(10) Date of each service test and service test results

(11) Damage and repairs, including who made the repairs and the cost of repair parts

(12) Reason removed from service

23.5.5

A nozzle removed from service for repair or because it has been condemned shall be tagged with a distinctive tag with the reason for removal from service noted on the tag.

23.5.6

Personnel responsible for the repair and maintenance of nozzles shall ensure that a report of the work performed to repair each nozzle is recorded on the permanent nozzle record.

Chapter 24 Care, Use, Inspection, Maintenance, Service Testing, and Replacement of Fire Hose Appliances (NFPA 1962) Save As Word Show Revisions/Notes Show PI/PC's Quick Print

24.1 Care, Use, and Maintenance of Fire Hose Appliances.

24.1.1

All appliances shall be used only for their designed purpose.

24.1.2*

No appliance shall be operated at a pressure above its maximum operating pressure as marked on the appliance by the manufacturer.

24.1.2.1*

Where an operating pressure is not marked on the appliance and the manufacturer cannot be located, the appliance shall be service tested to 300 psi (20.7 bar or 2070 kPa).

24.1.2.2

If the appliance passes the service test, it shall be permanently marked “Max operating pressure 200 psi (13.8 bar or 1380 kPa).”

24.1.3

All appliances shall be operated as recommended by the manufacturer.

24.1.4

To prevent mechanical damage, appliances shall not be dropped or dragged.

24.1.5

Valves shall be opened and closed slowly to eliminate unnecessary strain on connecting hose and fire hose couplings and to reduce pressure surges (water hammer).

24.1.6

If the appliance is not continuously connected to the fire apparatus, the appliance shall be rinsed with clear water and visually inspected for obvious damage in accordance with 24.2.1(1) through 24.2.1(5) after each use.

24.1.7*

Where appliances are left continuously connected to the fire apparatus or other devices or are used where standing water is trapped inside the appliance (e.g., inlet elbows and valves), the appliance shall be flushed to the extent possible with fresh water following each use and visually inspected for obvious damage in accordance with 24.2.1(1) through 24.2.1(5).

24.1.8

All appliances shall be maintained in accordance with the appliance manufacturer’s instructions.

24.1.9

If, during use, the appliance has been contaminated, it shall be decontaminated by the method approved for the contaminant.

24.2 Inspection of Fire Hose Appliances.

24.2.1

All appliances shall be visually inspected at least quarterly to verify the following:

(1) All valves open and close smoothly and fully.

(2) The waterway is clear of obstructions.

(3) There is no damage to any thread or other type connection.

(4) The pressure setting of the relief valve, if any, is set correctly.

(5) All locks and hold-down devices work properly.

(6) Internal gaskets are in accordance with Section 25.2.

(7) There is no damage to the appliance (e.g., dents, cracks, or other defects that could impair operation).

(8) All swiveling connections rotate freely.

(9) There are no missing parts or components.

(10) There is no corrosion on any surface.

(11) The marking for maximum operating pressure is visible.

(12) There are no missing, broken, or worn lugs on fire hose couplings.

24.2.2*

If the appliance fails an inspection for any reason, the appliance shall be removed from service and the problem corrected or repaired in accordance with the manufacturer's instructions and service tested in accordance with Section 24.3 before it is placed back in service.

24.2.2.1

If the appliance requires repair to correct a problem identified in 24.2.1(7) through 24.2.1(9), the appliance shall be service tested in accordance with Section 24.3 before it is placed back in service.

24.2.2.2

If the appliance fails inspection because corrosion is found, the appliance shall be cleaned to remove all corrosion, service tested in accordance with Section 24.3, and lubricated with an anticorrosive lubricant acceptable to the appliance manufacturer on all surfaces that showed corrosion.

24.2.3

An appliance that is out of service for repair shall be tagged as specified in 24.4.5 and kept separated from any appliance in storage that is ready for service.

24.3 Service Testing of Fire Hose Appliances.

24.3.1 Hydrostatic Test.

Each fire hose appliance with the exception of elbows shall be service tested in accordance with this section at least annually.

24.3.1.1*

The appliance being tested shall be positioned in a protective device or cover capable of holding the appliance and tested to a minimum hydrostatic pressure of 300 psi (20.7 bar or 2070 kPa).

24.3.1.2

Test caps capable of withstanding the required hydrostatic pressure shall be attached to openings, and a device capable of exerting the required hydrostatic pressure shall be attached to the appliance.

24.3.1.2.1

Appliances with relief valves shall have the relief valve outlet blanked off or adjusted to the closed position during the test.

24.3.1.2.2

All air shall be bled from the system.

24.3.1.2.3

The test gauge used to read the test pressure shall have been calibrated within the previous 12 months.

24.3.1.3

The gauge pressure shall be increased by 50 psi (3.45 bar or 345 kPa) increments and held for 30 seconds at each pressure up to the maximum pressure for which the appliance is being tested and held for 1 minute without leakage.

24.3.2 Relief Valve Test.

24.3.2.1

Hydrostatic testing of the appliance shall be conducted prior to testing the relief valve.

24.3.2.2

The relief valve shall be set to its lowest setting and pressurized.

24.3.2.3

If the relief valve does not operate at or below a pressure 10 percent over the setting, the test shall be discontinued and the relief valve repaired or replaced.

24.3.2.4

The test gauge used to verify the setting shall have been calibrated within the previous 12 months.

24.3.2.5

After successful completion of the relief valve test, the relief valve shall be reset to the pressure designated by the authority having jurisdiction.

24.3.2.6

The final setting of the relief valve shall be confirmed by pressure testing.

24.3.3 Shutoff Valve Test.

24.3.3.1

If the appliance has a shutoff valve, the intake side of the shutoff valve shall be hydrostatically pressurized to the maximum working pressure of the appliance with the valve in the shutoff position.

24.3.3.2

There shall be no leakage through the valve.

24.3.3.3

A water flow through the fire hose appliance at 100 psi (6.9 bar or 690 kPa) shall be established.

24.3.3.4

The valve shall be closed and reopened twice and shall operate smoothly without evidence of binding or other problems.

24.3.4 Check Valve Test.

24.3.4.1

If the appliance has a check valve, and the check valve can be pressurized by valves being closed downstream of the check valve, the output side of the check valve shall be hydrostatically pressurized to the maximum working pressure of the appliance.

24.3.4.2

There shall be no leakage through the check valve.

24.4 Fire Hose Appliance Records.

24.4.1

A record for each fire hose appliance shall be maintained from the time the fire hose appliance is purchased until it is discarded.

24.4.2

Each fire hose appliance shall be assigned an identification number for use in recording its history throughout its service life.

24.4.3

The identification number shall be marked on the fire hose appliance in a manner that prevents damage to the appliance.

24.4.4

The following information, if applicable, shall be included on the record for each fire hose appliance:

(1) Assigned identification number

(2) Manufacturer

(3) Product or model designation

(4) Vendor

(5) Warranty

(6) Hose connection size

(7) Maximum operating pressure

(8) Flow rate or range

(9) Date received and date put in service

(10) Date of each service test and service test results

(11) Damage and repairs including who made the repairs and the cost of repair parts

(12) Reason removed from service

24.4.5

An appliance removed from service for repair or because it has been condemned shall be tagged with a distinctive tag with the reason for removal from service noted on the tag.

24.4.6

Personnel responsible for the repair and maintenance of appliances shall ensure that a report of the work performed to repair each appliance is recorded on the permanent appliance record.

24.5 Fire Hose Appliance Replacement.

Fire hose appliance users and the authority having jurisdiction shall establish a replacement schedule for their fire hose appliances that takes into consideration the use and age of the fire hose appliance and testing results.

Chapter 25 Care and Inspection of Fire Hose Couplings and Gaskets (NFPA 1962)

25.1 Fire Hose Couplings.

25.1.1

Fire hose couplings shall be kept in serviceable condition.

25.1.2

A lubricant specified by the fire hose coupling manufacturer shall be permitted to be used on fire hose coupling swivels and threads.

25.1.3*

After each use and during each hose service test, fire hose couplings shall be visually inspected for the following defects:

(1) Damaged threads

(2) Corrosion

(3) Slippage on the hose

(4) Out-of-round

(5) Connections not rotating freely

(6) Missing lugs

(7) Loose external collar

(8) Internal gasket not in accordance with Section 25.2

(9) Other defects that could impair operation

(10) Any locking device operating improperly

25.1.4

Hose with defective fire hose couplings shall be removed from service and the fire hose couplings repaired or replaced.

25.1.5

All nonthreaded 4 in. (100 mm) and 5 in. (125 mm) hose connections shall be provided with locks that meet NFPA 1963.

25.1.6*

Care shall be taken not to drop the fire hose couplings on pavement or other hard surfaces, which can cause damage to the swivel section or exposed threads.

25.1.7

Care shall be taken to prevent vehicles from driving over fire hose couplings.

25.1.8

Special care shall be taken where fire hose couplings of dissimilar metals are connected, as corrosion can occur due to this difference and moisture tends to accelerate this corrosion.

25.1.8.1

Where fire hose couplings of dissimilar metals are left connected, they shall be disconnected and inspected at least quarterly.

25.1.8.2

If corrosion exists, the fire hose couplings shall be cleaned and an anticorrosive lubricant specified by the fire hose coupling manufacturer shall be applied to the threads.

25.1.8.3

Anticorrosive lubricant shall be applied at the time of each service test.

25.1.9

When new or used bowl couplings are being attached, care shall be taken to have the hose fit correctly in the bowl.

25.1.9.1*

The outside diameter of the hose shall fit snugly in the internal diameter of the bowl of the coupling.

25.1.9.2*

The expansion ring shall be of the correct size and length for the fire hose coupling used.

25.1.9.3*

A new tail gasket shall be used.

25.1.10*

When new or used shank-type couplings are being attached, care shall be taken to have the hose fit properly on the shank.

25.1.10.1

The inside diameter of the hose shall fit snugly on the external diameter of the shank of the coupling.

25.1.10.2

The collar shall be compatible with the shank and shall be sized for the hose used.

25.1.10.3

The socket head cap screws on shank-type couplings shall be torqued to the manufacturer’s specified tolerance.

25.1.11*

When fire hose couplings are attached or reattached to hose, the hose shall be tested at its service test pressure in accordance with Section 22.9, 22.10, or 22.12 as appropriate.

WARNING: Because there is a potential for catastrophic failure during these tests, it is vital that safety precautions be taken to prevent exposure of anyone to this danger. Do not deviate from the procedures prescribed in 22.9.5 and 22.9.6.

25.1.12

The date and nature of the repair or recoupling and the identity of the person performing the repair shall be recorded for each length of hose as specified in Section 22.12.

25.1.13

The socket head cap screws on shank-type couplings shall be checked at least annually to ensure that they are torqued to the manufacturer’s specified tolerance and shall be replaced at any sign of wear.

25.2 Gaskets.

25.2.1*

The thread gasket in fire hose couplings, nozzles, and hose appliances shall be inspected for presence, tight fit, and lack of deterioration.

25.2.2*

Gaskets shall not protrude into the waterway.

25.2.3

Any gasket that is defective or misfits shall be replaced with a new gasket that meets the requirements of NFPA 1963.

Chapter 26 System Tests (NFPA 1962)

26.1* General.

26.1.1

Each preconnected hose line or any attack line used for interior firefighting operations on a fire apparatus together with the nozzle or hose connected appliance it supplies shall be flow tested as a system at least annually.

26.1.2

Before this test is performed, the nozzle on the hose line or the hose-connected appliance shall have been flow tested as required by 23.3.2.

26.1.3*

A flow gauge shall be installed within the selected hose line.

26.1.4

The pump discharge pressure shall be raised until the flow gauge reads the desired flow of the selected hose line as set by the authority having jurisdiction.

26.1.5

The authority having jurisdiction shall verify that the pump discharge pressures and flows are consistent with their pump charts or standard operating procedures (SOPs) for interior firefighting.

26.1.6

If the nozzle is changed on the hose line, the length of the hose line is changed, or a different type or diameter of hose is installed, the test shall be repeated.

Annex A Explanatory Material

Annex A is not a part of the requirements of this NFPA document but is included for informational purposes only. This annex contains explanatory material, numbered to correspond with the applicable text paragraphs.

A.1.3

Beginning with the publication of NFPA 1930, new editions of NFPA 1801, NFPA 1802, NFPA 1932, NFPA 1937, and NFPA 1962 will not be published as separate, standalone standards. Where an authority having jurisdiction wants to update references, the referencing language should refer to NFPA 1930 or the specific chapters of NFPA 1930, as identified in Section 1.3.

The numbers found in parentheses at the end of each chapter title refer to the former standalone documents and are intended to help users navigate between this standard and the former standalone documents.

A.3.2.1 Approved.

The National Fire Protection Association does not approve, inspect, or certify any installations, procedures, equipment, or materials nor does it approve or evaluate testing laboratories. In determining the acceptability of installations or procedures, equipment, or materials, the “authority having jurisdiction” may base acceptance on compliance with NFPA or other appropriate standards. In the absence of such standards, said authority may require evidence of proper installation, procedure, or use. The “authority having jurisdiction” may also refer to the listings or labeling practices of an organization that is concerned with product evaluations and is thus in a position to determine compliance with appropriate standards for the current production of listed items.

A.3.2.2 Authority Having Jurisdiction (AHJ).

The phrase “authority having jurisdiction,” or its acronym AHJ, is used in NFPA standards in a broad manner because jurisdictions and approval agencies vary, as do their responsibilities. Where public safety is primary, the authority having jurisdiction may be a federal, state, local, or other regional department or individual such as a fire chief; fire marshal; chief of a fire prevention bureau, labor department, or health department; building official; electrical inspector; or others having statutory authority. For insurance purposes, an insurance inspection department, rating bureau, or other insurance company representative may be the authority having jurisdiction. In many circumstances, the property owner or his or her designated agent assumes the role of the authority having jurisdiction; at government installations, the commanding officer or departmental official may be the authority having jurisdiction.

A.3.2.4 Listed.

The means for identifying listed equipment may vary for each organization concerned with product evaluation; some organizations do not recognize equipment as listed unless it is also labeled. The authority having jurisdiction should utilize the system employed by the listing organization to identify a listed product.

A.3.3 General Definitions.

The following terms are commonly used in the thermal imaging field but do not have official definitions:

(1) **2X Zoom.** A method to change a distant view to a closer view by enlarging the image by a factor of 2, thereby reducing the field of view.

(2) **Digital Zoom.** The enlargement of a viewable image achieved by digitally enlarging a portion of the optical image.

(3) **Ge.** Germanium.

(4) **Hand Held.** Referring to a thermal imager design that is intended to be held in the hand and normally operated in such fashion.

(5) **Hands Free.** An operational mode whereby, once activated, the device no longer requires manipulation by hand for regular use.

(6) **Infrared (IR).** Electromagnetic radiation having a wavelength in the range from c.75 × 10^{-6} cm to c.100,000 × 10^{-6} cm (0.000075 to 0.1 cm).

(7) **Optical Zoom.** The enlargement of a viewable image achieved through the physical movement of optical elements to change the focal length.

(8) **Phase Alternating Line (PAL).** A composite video standard that displays 25 interlaced frames per second (50 half frames per second) at 625 lines of resolution.

(9) **Radio Frequency Interference (RFI).** The unwanted reception of radio signals.

A.3.3.11 Bluetooth®.

For example, short ranges could be 1 m to 100 m (3.28 ft to 328.1 ft). Bluetooth® is defined in IEEE 802.15.1, *IEEE Standard for Telecommunications and Information Exchange Between Systems — LAN/MAN — Specific Requirements — Part 15: Wireless Medium Access Control (MAC) and Physical Layer (PHY) Specifications for Wireless Personal Area Networks (WPANs)*.

A.3.3.13 Butt.

A butt can be the lower end of beams or can be added devices.

A.3.3.14 Butt Spurs (Feet).

Butt spurs can be the lower end of beams or can be added devices.

A.3.3.19 Coating.

Color can be added to the coating for the purpose of identification.

A.3.3.23 Compatible Device.

A compatible device could include a self-contained breathing apparatus (SCBA) mask microphone/earpiece.

A.3.3.27.2 Powered Rescue Tool Components.

The individual parts that are assembled in a rescue tool or component thereof, such as seals, screws, valves, and switches, are not themselves considered components for the purposes of this standard.

A.3.3.29 Coupling.

A coupling, also referred to as a quick-release coupling, replaces threaded connections.

A.3.3.32 Decontamination.

Biological, chemical, and radioactive materials are examples of hazardous substances.

A.3.3.45 Fire Hose Appliance.

Fire hose appliances include such devices as monitors, ladder pipes, wyes, siameses, and hydrant valves.

A.3.3.52 Free Weight.

Free weights typically include sandbags, concrete blocks, water tanks, or lead weights.

A.3.3.56 Hazard Zone Mode.

These activities include, but are not limited to, fire suppression — both interior/exterior structural and wildland, as well as hazardous materials mitigation and technical rescue.

Detail SF

PCs [1] SR-12 Hide Legisl

A.3.3.57 Hazardous (Classified) Location (HazLoc).

A hazardous (classified) location is a location in which an explosive gas atmosphere or explosive dust atmosphere might exist. Electrical equipment used where such atmospheres might exist should be protected against the risk of explosion from energy or thermal ignition sources. In this standard, intrinsic safety (IS) and nonincendive (NI) are protection concepts associated with the rating of equipment for operation in potentially explosive atmospheres. IS and NI ratings consider the nature of the explosive atmosphere encountered — Class I being explosive gas atmospheres and Class II being explosive dust atmospheres — and the frequency or interval of the presence of such explosive atmospheres (i.e., continuously, intermittently, or abnormally). The frequency or interval of the presence of the explosive atmosphere determines the proper Division (i.e., Division 1 or Division 2) or Zone (i.e., Zone 0, Zone 1, or Zone 2) classifications that are applied to a particular IS or NI rating. To determine the appropriate IS or NI rating for thermal imagers and RF devices, the AHJ identifies the expected explosive atmospheres likely to be encountered and the expected frequency or interval of the presence of such expected explosive atmospheres.

Examples of flammable or combustible material include flammable gases, flammable liquid-produced vapors, combustible liquid-produced vapors, combustible dusts, or ignitible fibers/flyings.

PCs [1]

A.3.3.57.2.10 Nonincendive Circuit.

The circuit is evaluated under prescribed test conditions.

A.3.3.62.1 Attack Hose.

Attack hose is designed to convey water to handline nozzles, distributor nozzles, master stream appliances, portable hydrants, manifolds, standpipe and sprinkler systems, and pumps used by fire departments. It is designed with a minimum service test pressure of 300 psi (20.7 bar or 2070 kPa) for a normal highest operating pressure of 275 psi (19 bar or 1895 kPa).

A.3.3.62.2 Booster Hose.

Booster hose is manufactured in sizes up to 1½ in. (38 mm).

A.3.3.62.5 Forestry Fire Hose.

Forestry fire hose is designed with a minimum design service test pressure of 300 psi (20.7 bar or 2070 kPa) for a normal highest operating pressure of 250 psi (17.25 bar or 1723 kPa).

A.3.3.62.8 Soft Suction Hose.

Hose used to connect between a fire hydrant and a pump intake is sometimes called soft suction hose. In reality, this is generally a short length of supply hose with female couplings on both ends, one end with the local fire hydrant connection size and thread, the other end with the pump intake size and thread.

A.3.3.62.10 Supply Hose.

Supply hose is designed with a minimum acceptance test pressure of 200 psi (13.8 bar or 1380 kPa) to provide a normal highest operating pressure of 185 psi (12.8 bar or 1275 kPa).

See SF

A.3.3.66.1 *In Service Hose.*

Hose in storage where it is not readily available to be put into service at an incident is not considered as in service.

A.3.3.72 Leak.

For fire hose, water should not escape through the hose jacket in any quantity during the service testing process. However, a leak should not be confused with condensation on the hose. If the area of concern is wiped and additional water appears immediately, the hose is leaking.

A.3.3.80 Mode.

Such features could include a radio channel, talk paths in a conventional system or a talkgroup in a trunked system, a CTCSS tone, an encryption type, or another feature.

A.3.3.83 Multipurpose Ladder.

Multipurpose ladders are typically manufactured in accordance with commercial standards. Because these ladders have a typical duty rating of only 136 kg to 170 kg (300 lb to 375 lb), which is far less than that of a ladder manufactured in accordance with NFPA 1931, it is highly recommended that multipurpose ladders be loaded with only a single person and not used for the rescue of victims where both the victim and the firefighter are required to be on the ladder simultaneously.

A.3.3.84 Nonhazard Zone Mode.

This mode would be used when first responders are performing administrative, training, inspections, or other duties not in the hazard zone.

A.3.3.87 Out-of-Range.

The out-of-range indication warns ESP that their RF device is no longer in communication with the system. This feature is most commonly offered in radio trunking systems, where loss of the trunking control channel or data stream will cause the RF device to emit a “honk” tone to the user who is pressing the push-to-talk (PTT) button, indicating that the RF device cannot be used because it cannot receive the control channel. Note that this standard requires that the user experience an audible indication when the control channel is lost, and not just when the user attempts a PTT.

A.3.3.102 Product Label.

The product label is not the certification organization’s label, symbol, or identifying mark; however, the certification organization’s label, symbol, or identifying mark is attached to or is part of the product label.

A.3.3.112 Rescue Tool.

This is also another term for powered rescue tool.

A.3.3.114 RF Device.

This is most commonly a portable two-way land mobile radio.

A.3.3.138 Talkgroup.

Talkgroups may also have some unique and common features, such as a priority level of transmission, a common encryption code, etc. Talkgroups are typically associated with trunked radio systems, as opposed to conventional radio systems that do not use trunking techniques.

A.3.3.140 Telecommunications Industry Association (TIA).

TIA is accredited by the American National Standards Institute (ANSI) as a standards developing organization.

See SF

A.3.3.148 Trunking Signaling Block (TSBK).

These messages are typically formatted as a single block message and use the same Trellis coding as an unconfirmed data packet. *(See 11.9.6.)*

A.3.3.153 Voltage Standing Wave Ratio (VSWR).

Examples of how radio-frequency power is transmitted from a power source include through a transmission line, into a load, or from a power amplifier through a transmission line to an antenna.

A.3.3.155 Water Hammer.

The formula for water hammer is as follows:

$$\Delta p = cd\Delta v \qquad \textbf{[A.3.3.155}$$

where:

Δp = change in pressure [lb/ft^2 (kg/m^2)]

c = velocity of pressure wave traveling back toward the water sources [ft/sec (m/sec)]

d = mass density of water [1.9 slugs/ft^3 (979.2 kg/m^3)]

Δv = change in water velocity [ft/sec (m/sec)]

Note: For 2½ in. (65 mm) double-jacket rubber-lined hose, c is approximately 800 to 1000 ft/sec (240 to 300 m/sec). *(See Purington, Fire Fighting Hydraulics.)*

A.3.3.158 Zone.

This is often a group of 16 channels or talkgroups, because of the way that most land mobile radio RF devices are manufactured today.

A.4.1.1.2.1

Users of thermal imagers certified to earlier editions of this standard can incorporate updated parts, components, or software to allow certification to the latest edition of this standard. This paragraph has been added so that the latest revision of the standard can be used for devices containing new parts, components, or software to upgrade the certification to the current edition.

A.4.1.1.5

Purchasers and manufacturers of thermal imagers should understand that this standard addresses minimum requirements for thermal imagers with the TI BASIC operational format. The TI BASIC PLUS operational format permits accessories and enhancements for a thermal imager as long as they meet the applicable requirements and can be easily disabled or removed, reverting the camera back to the certified TI BASIC mode. Thermal imaging technology is advancing quickly. Potentially useful thermal imaging accessories and enhancements should be considered as long as they do not negatively affect the thermal imager's performance.

Thermal imager enhancements and accessories include wireless video transmitters, image and video capture, alternative uses of color in the thermal image, user-set color-temperature transition points, and icons on the screen for other functions. Purchasers interested in enhanced thermal imager capabilities (TI BASIC PLUS) should consider the benefits and limitations of the additional capabilities before making a purchase. Fire departments vary greatly in size, response types, and capabilities. For example, fire departments on the west coast are more likely to encounter large wildland fires than New York City, Boston, or Chicago, which are more likely to experience multiple-alarm tenement or row house building fires. Flood-prone regions are less likely to have underground garages, sub-basements, or subway systems. These examples provide different challenges for the utilization of thermal imagers and any accessories.

Some thermal imaging enhancements and accessories utilize radio signal technology. Radio signals react differently in variable and different environments and present different challenges to radio signals. Transmission of radio signals is affected by topography, weather conditions, building layout and design, and construction materials, and other obstructions in a given area.

In the testing lab environment, wireless thermal imaging accessories such as video transmitters, image capturing devices, and alarm devices cannot be "tested" in the total environment in which they could be used. Prospective end-users can conduct field testing of such devices in the total environment in which they could be used. Antennas or repeaters can be incorporated into radio frequency (RF) systems used in large industrial and commercial facilities. Realistic and rigorous on-site testing of systems and components will help ensure satisfactory coverage and help the user develop reasonable expectations. Physical testing of thermal imagers utilizing any form of RF technology should be conducted in an actual or realistic environment. Current RF laboratory testing methods cannot take into account the commonly found variety of construction and obstructions. Fire service organizations should take into consideration the local factors in their immediate response areas.

Based on actual jurisdictional performance testing, fire service organizations can make informed decisions regarding the purchase, use, and development of operational procedures to be used in providing the maximum level of protection for fire and rescue personnel in their jurisdiction. Purchasers should develop operational procedures to ensure that their thermal imager's enhancements and accessories will function as expected.

In consideration of the factors previously noted, the purchaser should develop testing and performance criteria similar to the following:

(1) Prior to using or purchasing a product or system, the local fire service organization should select several different typical target hazard test scenarios likely to be encountered in the normal response area for field testing of the product or system.

(2) These target hazard test locations should provide rigorous testing scenarios and should include RF dead spots (if applicable), unusual building complexes, aboveground and belowground configurations, and typical local construction materials.

(3) A person(s) designated by the fire service organization(s) should participate in site selection and field testing.

(4) Testing should be conducted by simulation of actual emergency operations and conditions.

  (a) The fire service official should designate an area (i.e., a base station) where accessory receiving components of the thermal imager system would be located if the incident were real.

  (b) Fire service responders should use the devices just as they would during an actual emergency and travel to all areas of the simulated emergency scene test area.

  (c) The test scenarios for RF testing should be made as difficult and as challenging as possible so problem areas where an RF signal might have difficulty penetrating a building or structure can be isolated and addressed.

  (d) Testing results should be recorded along with environmental factors such as the type of occupancy (residential, commercial, industrial, etc.), construction features, weather conditions, and location.

(5) Enhancement devices (leaky coaxial feeders, repeaters, enhanced radio receivers) can be used as necessary, with placement and effectiveness recorded.

(6) Fire service responders who would routinely have multiple receiving components on the scene of an actual emergency should place multiple receiving devices in service during field-testing scenarios in accordance with their standard operating procedures.

(7) *NFPA 5000* outlines the eight basic types of construction that should be considered as part of the field-test criteria.

(8) Users should evaluate the effectiveness of the device as it relates to the developed operational procedures.

By conducting these recommended field tests, fire service organizations can witness the performance of the product in the environment in which it is intended to be used, determine with reasonable accuracy whether the product meets their expectations, and then make an appropriate decision.

A.5.2.3

Information and materials regarding preoperational use (a user's manual) provides the user with information about the operation of the TIC, BASIC and BASIC PLUS features, its care, and maintenance. The organization of the user's manual is not specified. The checklist in Table A.5.2.3 can help assure that the supplied documentation addresses all requirements. The column labeled "Page no./Paragraph" should identify the page and paragraph number where the requirement in the column labeled "Description" is addressed. This will ensure that all requirements have been met and manufacturers may provide the table to the certification organization with their user's manual to assist with the verification of their compliance with the standard. Including this checklist, or some form of it, as part of the user's manual will also assist users in becoming familiar with the camera.

Table A.5.2.3 Checklist

Section	Description	Page No. / Paragraph
5.2.3	Information and materials regarding preoperational use shall be provided on at least the following areas: 1. Safety considerations 2. Preuse checks 3. Limitations of use 4. Power source requirements, type, and brand 5. Estimate operation time on fully charged power source in each available mode 6. Low-power source signals and power supply replacement, where applicable 7. Charging and recharging procedures 8. Marking recommendations and restrictions 9. Warranty information 10. Recommended storage practices 11. Mounting on/in vehicles or fire apparatus 12. Explanation and identification of the features and functions of TI BASIC/TI BASIC PLUS 13. Symbols and functions with associated temperature references in available operating modes 14. If equipped with a temperature bar, adequate description of the use of the temperature bar 15. If equipped with a numeric temperature indicator, adequate description of the use of the numeric temperature indicator 16. If equipped with colorization, adequate description of the temperature thresholds for colorization	
5.2.4	Information and operational materials regarding periodic inspections shall be provided on at least inspection frequency and details.	
5.2.5	Information and operational materials regarding proper operational use shall be provided.	
5.2.6	Information and operational materials regarding periodic maintenance and cleaning shall be provided on at least the following areas: 1. Cleaning instructions and precautions 2. Disinfecting procedures 3. Maintenance frequency and details 4. Guidelines for service and repair	
5.2.7	Information and operational materials regarding replacement and retirement considerations for thermal imagers and components shall be provided.	

A.6.1.2

All power sources consisting of battery cells and battery packs should be evaluated by a national recognized testing laboratory (NRTL) in accordance with the regulations outlined in UL 1642, *Lithium Batteries*, or UL 2054, *Household and Commercial Batteries*, or both.

A.6.3.1

A FMEA provides an approach to identifying and ranking thermal imager failure modes that could lead to product hazard. The FMEA is organized based on safety functions provided by the thermal imager. These functions can be implemented in a single component or across multiple components.

The FMEA should address, at a minimum, all failure modes of components that would result in the following failure effects for TI BASIC functions:

(1) Failure to indicate inadequate power source

(2) Failure to provide shutdown notification due to an overheat condition

(3) Failure to meet image quality requirements

(4) Failure to turn on

(5) Failure to be restarted to the TI BASIC operational format

The FMEA should be conducted in accordance with the industry standard JEDEC Publication JEP131A, *Potential Failure Mode and Effects Analysis (FMEA)*.

The effect of the failure mode is determined by the system's response to the failure. The FMEA identifies subassemblies and their functions, the failure mode for those subassemblies, the failure effect on other subassemblies as well as the whole system, and the corrective action to be taken.

Step 1: Select function. The FMEA process begins by selecting a thermal imager function to be analyzed. Record the requirement number and the requirement description on the FMEA form *(see Figure A.6.3.1).*

Figure A.6.3.1 FMEA Form.

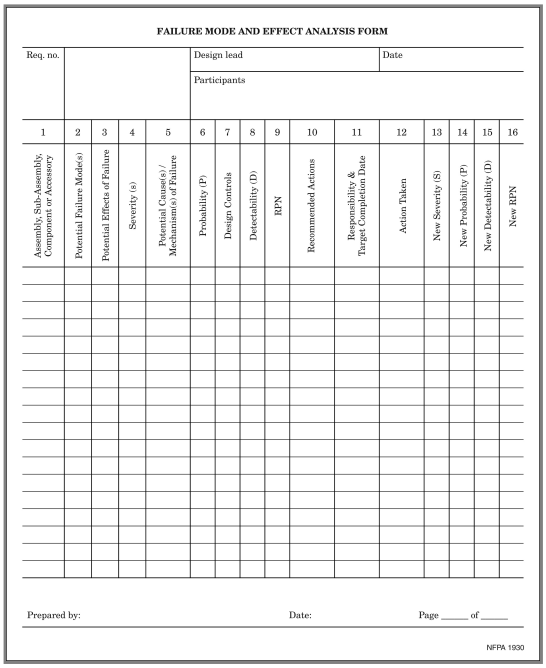

FAILURE MODE AND EFFECT ANALYSIS FORM

Req. no.					Design lead							Date			
					Participants										
1	2	3	4	5	6	7	8	9	10	11	12	13	14	15	16
Assembly, Sub-Assembly, Component or Accessory	Potential Failure Mode(s)	Potential Effects of Failure	Severity (s)	Potential Cause(s) / Mechanism(s) of Failure	Probability (P)	Design Controls	Detectability (D)	RPN	Recommended Actions	Responsibility & Target Completion Date	Action Taken	New Severity (S)	New Probability (P)	New Detectability (D)	New RPN

Prepared by: Date: Page _____ of _____

NFPA 1930

Step 2: Identify equipment components. Step 2 identifies all the equipment components that implement the function requirement. List the components in Column 1 of the FMEA form.

Step 3: Specify failure mode for identified components. For each component listed in column 1 of the FMEA form, list potential failure modes in Column 2. A failure mode is any component failure that results in failure of the component to deliver part or all of its intended functionality.

Step 4: Identify failure effects. For each component failure mode included in Column 2, Step 4 identifies one or more failure effects that the identified failure mode would have on delivery of the thermal imager function being analyzed. Include the failure effect in the third column. A failure effect is a deviation in function output value (e.g., "cross-hairs" in wrong location) or timing (e.g., "instant on" takes 2 minutes instead of 10 seconds).

Step 5: Determine severity (S) of failure modes and effects. Table A.6.3.1(a) provides the criteria for determining the severity of failure modes and effects.

Table A.6.3.1(a) Severity (S) Criteria

Severity (S)	Description	Value
Critical	A product hazard that judgment and experience indicate is likely to result in a condition immediately dangerous to life or health (IDLH) for individuals using or depending on the compliant product.	10

Severity (S)	Description	Value
	If an IDLH condition occurs, the user will sustain or will be likely to sustain an injury of a severity that could result in loss of life or in significant bodily injury or loss of bodily function, either immediately or at some point in the future.	
Major A	A product hazard other than Critical that is likely to result in failure to the degree that the compliant product either does not provide any protection or reduces protection and that is not detectable to the user. The term “reduces protection” means the failure of specific protective design(s) or feature(s) that results in degradation of protection in advance of reasonable life expectancy to the point that continued use of the product is likely to cause physical harm to the user, or where continued degradation could lead to IDLH conditions.	10
Major B	A product hazard other than Critical or Major A that is likely to result in reduced protection and that is detectable to the user. The term “reduces protection” means the failure of specific protective design(s) or feature(s) that results in degradation of protection in advance of reasonable life expectancy to the point that continued use of the product is likely to cause physical harm to the user, or where continued degradation could lead to IDLH conditions.	5
Minor	A product hazard other than Critical, Major A, or Major B that is not likely to materially reduce the usability of the compliant product for its intended purpose or a product hazard that is a departure from the established applicable standard and has little bearing on the effective use or operation of the compliant product for its intended purpose.	1

For each component failure mode and effect included in Column 3 of the FMEA form, the value for the severity level is recorded in Column 4. Base the value of the severity level, on the criteria provided in Table A.6.3.1(a).

Step 6: Determine the causes of failure and their probability (P). Table A.6.3.1(b) lists the probability of the failure for each potential failure mode and effect combination in Column 5. For each root cause, list in Column 6 the probability that the failure would occur using the categories in Table A.6.3.1(b).

Table A.6.3.1(b) Probability (P) Criteria

Category	Description	Probability
Frequent	The failure will occur often in the equipment life cycle.	10
Occasional	The failure will occur at least once in the equipment life cycle.	5
Improbable	So unlikely that it can be assumed that the failure will not occur in the equipment life cycle.	1

Step 7: Determine design controls and detectability (D). For each likely cause of failure, Table A.6.3.1(c) lists whether the design controls will help ensure that the failure can be detected. The design control is identified in Column 7 of the FMEA form. When causes are identified, discuss and document the design controls that will prevent, remove, or detect and recover from the effects of the failure mode. For each design control, assign a detectability value based on the criteria in Table A.6.3.1(c) and list it in Column 8 of the FMEA form.

Step 8: Compute risk priority number (RPN). Step 8 computes a risk priority number (RPN), listed in column 9 of the FMEA form, based on the values of risk, probability, and detectability, as follows:

RPN = $S \times P \times D$

The lower the value of the RPN, the lower the risk that a given failure will occur. The RPN value is the measure used as input to the risk analysis.

Table A.6.3.1(c) Detectability (D) Criteria

Category	Description	Value
Undetectable	There is no way to detect the occurrence of the failure mode and effect. Effective design controls are not in place.	10
Not Sure	The design controls in place might not always detect the failure mode and effect.	5
Detectable	The design controls in place will always detect the failure mode and effect.	1

A.6.3.4

The FMEA process includes a step for computing a measure identified as the risk priority number, or RPN (column 9), in Figure A.6.3.1. Higher RPN values imply higher risks. RPN values can be used to determine the ALARP region. Using the ALARP region provides a consistent criterion for stopping the FMEA for a required thermal imager function.

As shown in Figure A.6.3.4, the ALARP region has an upper and a lower limit. The upper limit is the horizontal line that separates the ALARP region from the intolerable region, where risk is refused. The lower limit is the horizontal line that separates ALARP from the broadly acceptable region, where the risk is insignificant. When the design controls implemented have reduced the risk to fall in the ALARP region, the FMEA might be stopped.

Specifying an ALARP value of 25 reduces the risk of remaining failures to the following:

(1) Minor severity failures that are occasional and that might or might not be detected

(2) Major B severity failures that are improbable and that might or might not be detected

(3) Major B severity failures that are occasional and that will be detected

The value of 25 thus seems reasonable for a more quantitative definition of an ALARP upper limit for thermal imagers.

Specifying an ALARP value of 10 reduces the risk of remaining failures to the following:

(1) Minor severity failures that are improbable and that will not be detected

(2) Minor severity failures that are frequent and that might or might not be detected

(3) Critical or Major A severity failures that are improbable and that will be detected

The value of 10 thus seems reasonable for a more quantitative definition of an ALARP lower limit for thermal imagers.

Figure A.6.3.4 Upper and Lower Limits of ALARP Region Based on RPN.

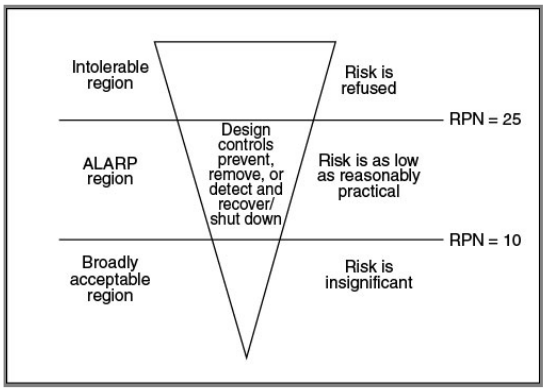

Table A.6.3.4 maps the target ALARP upper and lower limits to exposure.

Table A.6.3.4 Target ALARP Upper and Lower Exposure Limits

Exposure Category	ALARP Region
Hostile, fire	10 ≤ RPN ≤ 25
Hostile, non-fire	10 ≤ RPN ≤ 25

A.6.4.2

The TI BASIC functions feature is designed to allow the user who might be unfamiliar with a particular model of thermal imager to pick it up and use it. In the TI BASIC mode, the thermal imager is limited to those features that are standard on all thermal imagers. Operators with NFPA-compliant TI BASIC operational format training should be able to operate any other NFPA-compliant TI BASIC thermal imager.

A.6.5.2

Manufacturers can offer additional features, but the user should obtain instruction from a manufacturer's recognized trainer before placing the thermal imagers into service. TI BASIC PLUS features are limited to those who have received such advanced operational training.

PCs [1] SR-4 Hide Legisl

A.6.7

For decades, the explosion protection requirements for RF devices have traditionally been derived from intrinsic safety (IS) requirements, while the explosion protection requirements for thermal imagers have traditionally been derived from nonincendive (NI) requirements. Both of these explosion protections are from *NFPA 70, National Electrical Code (NEC)*. The *NEC* provides requirements for fixed electrical power installations in hazardous (classified) locations such as refineries and grain elevators. The use case for fire service portable devices is different in many ways from fixed electrical installations. In addition, changes were made recently in how testing organizations test certain fire service devices for explosion protection (e.g., RF devices). These changes provided an opportunity to revisit what the exact level of explosion protection is really required for portable devices used in the fire service. The committee has spent a significant amount of time looking at the various issues, reviewing the past history of incidents, and talking to industry experts. This standard, with regard to explosion protection, reflects that extensive analysis and the resulting decision. The following information is an explanation of some of the many issues and tradeoffs that were considered during this process.

First, the term *certified on delivery* warrants explanation. The firefighter faces many varied operating conditions and therefore needs equipment that can span those multiple conditions. Designing for hazardous locations, as classified by the *NEC*, is done with standards that often assume permanent mounting of electrical fixtures within a defined area. None of those areas approaches the environment found within any structure fire. As such, there is no established set of failure mechanisms, practices for design, or means of testing and validation that would make a product certified for use in an *NEC*-classified area retain its “guarantee of safety” in a structural fire. In other words, a product designed and certified for even the most hazardous conditions can lose its “guarantee of safety” after its first exposure to adverse environments commonly found on the fireground. In a sense then, the pursuit of traditional *NEC* IS certifications might not have provided the level of assurance that the fire service in fact thought it did. Because the purpose and scope of this document is first and foremost rooted in defining a product suitable for use on an active fireground, it cannot be ignored that one of its requirements can be invalidated by the resulting product’s intended use case.

Next, there is the reality that to date in the United States there has been no known instance of a fire service portable thermal imager or RF device ever having caused an explosion — it should be pointed out that many fire service organizations do not use IS-rated portables, so this fact is especially notable. The task group investigated the prior history with multiple organizations, determined that there were only three possible incidents, and upon detailed investigation determined that none of them had anything to do with the portable device.

However, there remain multiple first-responder missions in environments that do resemble *NEC*-classified hazardous locations. These include incident scenes without a current active fire, such as fuel spills and reported or actual gas leaks. These environments resemble classified hazardous locations in that there is likely a presence of an ignitible atmosphere; however, they differ in the following ways from what was envisioned in the *NEC* for explosion protection certifications:

(1) In these areas, there is likely to be multiple pieces of commercial or industrial equipment not designed to any explosion protection standard and, by their very nature, could be capable or even likely of igniting an atmosphere in normal or intended operation. In contrast, products designed for use in *NEC*-classified environments are designed so as to prevent the chance of combustion under normal operating conditions (i.e., Division 2 classified areas) or for situations where there are multiple fault conditions (i.e., Division 1 classified areas).

(2) Devices used by the firefighter spend much of their product life in relatively benign environments, interrupted by brief excursions into extremely hostile environments where combustion is often taking place. Due to the transient nature of this exposure, there is only a small window of time where the benefit of a product designed for use in an explosive atmosphere is of value. By contrast, products designed for use in *NEC*-classified Division 1 hazardous locations utilizing IS as the type of explosion protection, are intended for continuous use in those environments.

(3) Portable electrical devices used by first responders have multiple items that can either be either disconnected or replaced, such as RSMs, batteries, and interfaces to self-contained breathing apparatus (SCBA) masks. For example, IS-rated portable radios come with instructions not to change the battery in a hazardous environment. However, it is very possible that the RSM connection could accidentally become disconnected in the hazardous atmosphere. By contrast, fixed electrical installations in hazardous areas are physically interconnected by secured conduit and cable systems to the enclosures. This minimizes the likelihood of any sparks from being created within the area that contains the hazardous material, and also contains any explosions that might occur.

It is recognized that it might be desirable to obtain the level of confidence and safety resulting from the inherent explosion protection design techniques required to gain certification for use in *NEC*-classified Division 1 hazardous locations. However, currently no solution exists that would enable a product to retain its “guarantee of safety” during or after exposure to the extreme environment of an active fire. It is this intent that is captured by the term *certified on delivery*. There is an expectation that both the users and the AHJ will monitor explosion-protected equipment for continued fitness for use, including regular visual inspection for obvious compromise, examination and replacement of aging or damaged batteries, and periodic maintenance as prescribed by the manufacturer.

Therefore, at this time, this minimum standard requires Division 2 NI certification for portable devices. This does not stop vendors and the fire service from pursuing Division 1 IS certified portable devices if they so desire.

A.6.7.1

An SCBA is an example of a compatible device.

See SF

A.8.1.4.2(8)

Nikon applications ViewNX and ViewNX2 are recommended for the Nikon D3/D3S cameras, ViewNX Studio is recommended for the Nikon Z7II.

A.8.1.4.7.5

If the visible spectrum camera is in focus, a small dot appears. If it is out of focus, an arrow pointing to the left or to the right appears. Arrows alternating back and forth mean the camera is in focus. Arrows blinking simultaneously mean the camera is unable to determine focus.

A.8.1.5.10

W_{1X} is the 1X filter warm ROI, W_{4X} is the 4X filter warm ROI, A_{1X} is the 1X ambient ROI, and A_{4X} is the 4X ambient ROI.

A.8.12.5.11

A trend line determined by the least squares fit method is consistent with the following set of equations:

$$y = mx + b \qquad \text{[A.8.12.5.1}$$

where:

y = point on the trend line

m = slope of the line as defined in Equation A.8.12.5.11b

x = point on the x-axis

b = value at which the trend line crosses the zero point of the x-axis as defined in Equation A.8.12.5.11c

$$m = \frac{\sum(x - \bar{x})(y - \bar{y})}{\sum(x - \bar{x})^2} \qquad \text{[A.8.12.5.1}$$

$$b = \bar{y} - m\bar{x} \qquad \text{[A.8.12.5.1}$$

where $\bar{y}$ and $m\bar{x}$ are the mean x and y values.

The correlation coefficient (R^2) of the data with respect to the trend line is determined by Equation A.8.12.5.11d:

$$R^2 = \left(\frac{\sum[(x - \bar{x})](y - \bar{y})}{\sqrt{\sum(x - \bar{x})^2 \sum(y - \bar{y})^2}} \right)^2 \qquad \text{[A.8.12.5.1}$$

A.9.1.1.1

For the scope of this document, the primary function of an RF device is facilitating the voice communication link between personnel within a hazard zone and the incident commander (IC) or person(s) as indicated by the authority having jurisdiction (AHJ). This document is not intended to restrict the development or introduction of other forms of noninterfering communications or devices that use RF links for unrelated functions. An example would be short-range team intercom communication devices integrated into personal protective equipment (PPE) that do not serve as, but might augment, the RF device's voice link to the IC. Further, a device providing telemetry data on a firefighter or their equipment is not considered an RF device for the purposes of this document.

See SF

A.9.1.1.4

Accessories and enhancements such as touch screens, cellular broadband, or WiFi built into devices certified to this standard are not currently required to be tested. Design, performance, and testing of such capabilities might be addressed in future editions.

A.9.1.3.1

Outside the hazard zone, an RF device or RSM can be configured with compatible devices, including devices that serve the function of an RSM, that do not meet the requirements of this standard as long as the noncompliant item(s) can be quickly and easily deconfigured by the user prior to entering the hazard zone. For example, a boom mic headset or earpiece can be used in the course of duties performed by fire service personnel when not actively engaged in a hazard zone.

A.9.1.3.5

Emergency response organizations are cautioned that accessories are not part of the certified product but could be attached to a certified product by means not engineered, manufactured, or authorized by the certified product manufacturer.

Emergency response organizations are cautioned that if an accessory or its means of attachment causes the structural or electrical integrity of the certified product to be compromised, the certified product might not be compliant with the standard to which it was originally certified as compliant. Additionally, if an accessory or the accessory's means of attachment are not designed and manufactured from suitable materials for the hazardous environments of emergency incidents, the failure of the accessory or means of attachment could cause injury to the emergency responder. Because the aftermarket for accessories is so broad, emergency response organizations are advised to contact both the accessory manufacturer and the manufacturer of the certified product and verify that the accessory and its means of attachment are suitable for use in the intended emergency response environment. Emergency response organizations should seek and receive written documentation from the accessory manufacturer to validate the following assurances:

(1) Accessories for a certified product and the means of attachment will not degrade the designed protection or performance of the certified product below the requirements of the standard to which it was designed, manufactured, tested, and certified.

(2) The accessory, when properly attached to the certified product, will not interfere with form, fit, or function of any of the certified product or with the form, fit, and function of any of the certified product's component parts. Users are also cautioned that the means of attachment for accessories that fail to safely and securely attach the accessory to a certified product could allow the accessory to become inadvertently dislodged from the certified product, possibly posing a risk to emergency response personnel in the vicinity.

A.9.1.3.6

Emergency services organizations are encouraged to utilize the US Fire Administration *Voice Radio Communications Guide for the Fire Service* for information about the use of RF devices.

A.9.7.1

An FMEA provides an approach to identifying and ranking RF device or RSM failure modes that could lead to product hazard. The FMEA is organized based on safety functions provided by the RF device. These functions can be implemented in a single component or across multiple components. The FMEA should address, at a minimum, all failure modes of components that would result in the following failure effects of the RF device:

(1) Failure to indicate inadequate power source

(2) Failure to turn on

(3) Failure to receive voice communications

(4) Failure to transmit voice communications

(5) Failure to transmit emergency alert

(6) Failure to receive emergency activation

(7) Failure of the radio display

(8) Failure to connect and communicate with the RSM

(9) Failure to log data

The FMEA should address, at a minimum, all failure modes of components that would result in the following failure effects of an RSM:

(1) Failure to turn on

(2) Failure to receive voice communications

(3) Failure to transmit voice communications

(4) Failure to transmit emergency alert

(5) Failure to connect and communicate with a secondary RSM from a primary RSM

The FMEA should be conducted in accordance with JEP131A, *Potential Failure Mode and Effects Analysis (FMEA)*. The effect of the failure mode is determined by the system's response to the failure. The FMEA identifies subassemblies and their functions, the failure mode for those subassemblies, the failure effect on other subassemblies as well as the whole system, and the corrective action to be taken.

Step 1: Select function. The FMEA process begins by selecting an RF device function to be analyzed. Record the requirement number and the requirement description on the FMEA form *(see Figure A.9.7.1).*

Figure A.9.7.1 FMEA Form.

FAILURE MODE AND EFFECT ANALYSIS FORM

Req. no. | Design lead | Date

Participants

1	2	3	4	5	6	7	8	9	10	11	12	13	14	15	16
Assembly, Sub-Assembly, Component or Accessory	Potential Failure Mode(s)	Potential Effects of Failure	Severity (s)	Potential Cause(s) / Mechanism(s) of Failure	Probability (P)	Design Controls	Detectability (D)	RPN	Recommended Actions	Responsibility & Target Completion Date	Action Taken	New Severity (S)	New Probability (P)	New Detectability (D)	New RPN

Prepared by: Date: Page ____ of ____

NFPA 1930

Step 2: Identify equipment components. Step 2 identifies all the equipment components that implement the function requirement. List the components in column 1 of the FMEA form.

Step 3: Specify failure mode for identified components. For each component listed in column 1 of the FMEA form, list potential failure modes in column 2. A failure mode is any component failure that results in failure of the component to deliver part or all of its intended functionality.

Step 4: Identify failure effects. For each component failure mode included in column 2, step 4 identifies one or more failure effects that the identified failure mode would have on delivery of the RF device function

being analyzed. Include the failure effect in the third column. A failure effect is a deviation in function output value or timing.

Step 5: Determine severity (S) of failure modes and effects. Table A.9.7.1(a) provides the criteria for determining the severity of failure modes and effects. For each component failure mode and effect included in column 3 of the FMEA form, the value for the severity level is recorded in column 4. Base the value of the severity level, on the criteria provided in Table A.9.7.1(a).

Table A.9.7.1(a) Severity (S) Criteria

Severity (S)	Description	Value
Critical	A product hazard that judgment and experience indicate is likely to result in a condition immediately dangerous to life or health (IDLH) for individuals using or depending on the compliant product. If an IDLH condition occurs, the user will sustain or will be likely to sustain an injury of a severity that could result in loss of life or in significant bodily injury or loss of bodily function, either immediately or at some point in the future.	10
Major A	A product hazard other than Critical that is likely to result in failure to the degree that the compliant product either does not provide any protection or reduces protection and that is not detectable to the user. The term “reduces protection” means the failure of specific protective design(s) or feature(s) that results in degradation of protection in advance of reasonable life expectancy to the point that continued use of the product is likely to cause physical harm to the user, or where continued degradation could lead to IDLH conditions.	10
Major B	A product hazard other than Critical or Major A that is likely to result in reduced protection and that is detectable to the user. The term “reduces protection” means the failure of specific protective design(s) or feature(s) that results in degradation of protection in advance of reasonable life expectancy to the point that continued use of the product is likely to cause physical harm to the user, or where continued degradation could lead to IDLH conditions.	5
Minor	A product hazard other than Critical, Major A, or Major B that is not likely to materially reduce the usability of the compliant product for its intended purpose or a product hazard that is a departure from the established applicable standard and has little bearing on the effective use or operation of the compliant product for its intended purpose.	1

Step 6: Determine the causes of failure and their probability (P). Table A.9.7.1(b) lists the probability of the failure for each potential failure mode and effect combination in column 5. For each root cause, list in column 6 the probability that the failure would occur using the categories in Table A.9.7.1(b).

Table A.9.7.1(b) Probability (P) Criteria

Category	Description	Probability
Frequent	The failure will occur often in the equipment life cycle.	10
Occasional	The failure will occur at least once in the equipment life cycle.	5
Improbable	So unlikely that it can be assumed that the failure will not occur in the equipment life cycle.	1

Step 7: Determine design controls and detectability (D). For each likely cause of failure, Table A.9.7.1(c) lists whether the design controls will help ensure that the failure can be detected. The design control is identified in column 7 of the FMEA form. When causes are identified, discuss and document the design controls that will prevent, remove, or detect and recover from the effects of the failure mode. For each design control, assign a detectability value based on the criteria in Table A.9.7.1(c) and list it in column 8 of the FMEA form.

Table A.9.7.1(c) Detectability (D) Criteria

Category	Description	Value
Undetectable	There is no way to detect the occurrence of the failure mode and effect. Effective design controls are not in place.	10
Not Sure	The design controls in place might not always detect the failure mode and effect.	5
Detectable	The design controls in place will always detect the failure mode and effect.	1

Step 8: Compute risk priority number (RPN). Step 8 computes a risk priority number (RPN), listed in column 9 of the FMEA form, based on the values of risk, probability, and detectability, as follows:

$$RPN = S \times P \times D \qquad \textbf{[A.9.7.1]}$$

The lower the value of the RPN, the lower the risk that a given failure will occur. The RPN value is the measure used as input to the risk analysis.

A.9.7.4

The FMEA process includes a step for computing a measure identified as the risk priority number, or RPN (column 9), in Figure A.9.7.1. Higher RPN values imply higher risks. RPN values can be used to determine the ALARP region. Using the ALARP region provides a consistent criterion for stopping the FMEA for a required two-way, portable RF voice communications device function. As shown in Figure A.9.7.4, the ALARP region has an upper and a lower limit. The upper limit is the horizontal line that separates the ALARP region from the intolerable region, where risk is refused. The lower limit is the horizontal line that separates ALARP from the broadly acceptable region, where the risk is insignificant. When the design controls implemented have reduced the risk to fall in the ALARP region, the FMEA can be stopped.

Figure A.9.7.4 Upper and Lower Limits of ALARP Region Based on RPN.

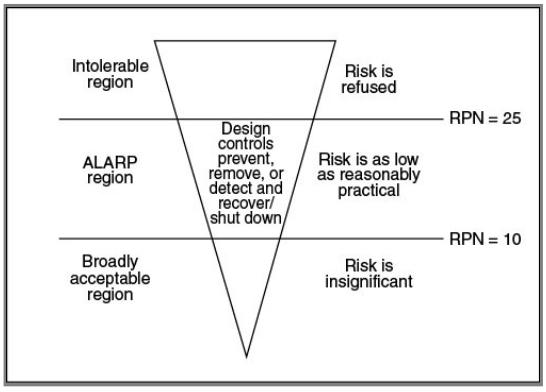

Specifying an ALARP value of 25 reduces the risk of remaining failures to the following:

(1) Minor severity failures that are occasional and that might or might not be detected

(2) Major B severity failures that are improbable and that might or might not be detected

(3) Major B severity failures that are occasional and that will be detected

The value of 25 thus seems reasonable for a more quantitative definition of an ALARP upper limit devices. Specifying an ALARP value of 10 reduces the risk of remaining failures to the following:

(1) Minor severity failures that are improbable and that will not be detected

(2) Minor severity failures that are frequent and that might or might not be detected

(3) Critical or Major A severity failures that are improbable and that will be detected

The value of 10 thus seems reasonable for a more quantitative definition of an ALARP lower limit devices.

Table A.9.7.4 maps the target ALARP upper and lower limits to exposure.

Table A.9.7.4 Target ALARP Upper and Lower Exposure Limits

Exposure Category	ALARP Region
Hostile, fire	10 ≤ RPN ≤ 25
Hostile, non-fire	10 ≤ RPN ≤ 25

A.11.1.4

The analog FM channel is the lowest common denominator required of the devices defined by this standard, and this is in conformance with NFPA 1225, which requires an analog simplex tactical communications channel. Because differing channel bandwidths are used in some national jurisdictions on different radio bands, the AHJ should ensure that the channel bandwidths for the frequency bands being used are in compliance with the national licensing authority's regulations.

In addition, it should be noted that some national licensing authorities are pushing for narrower channels in land mobile radio bands to create more useable spectrum. In the specific case of the FCC in the United States, they have stated in a recent docket (i.e., DA 17-632, 29 June 2017) that they do intend to push at some future point in time for licensees in the VHF and UHF bands to move from 12.5 kHz spacing to 6.25 kHz spacing, and a request for this not to apply to the US fire service was denied. If and when such a mandate to 6.25 kHz spacing is made, it will be necessary for users to move from analog to digital technology, because analog technology cannot support such narrow channel spacings. Therefore, AHJs should consider the ramifications of purchasing and using equipment that cannot be migrated to 6.25 kHz operation in the future.

A.11.2.1.1

The nonhazard zone is expected to include administrative activities, fire marshal (i.e., inspection) duties, EMS runs, and so on. Use in the nonhazard zone is not expected to require some of the special features of the hazard zone mode, such as full RF power emergency transmissions.

A.11.2.2.2

It is recommended that the AHJ program the RF device such that two separate actions are required to power off the RF device while it is in the Hazard Zone mode. This is to prevent an inadvertent powering off of the RF device. An example of a possible two-action process might be to turn the volume control to off at the same time that the side programmable button is depressed.

A.11.3.1(4)

The two-position switch is typically programmed to provide additional features to the RF device that are commonly used. Examples include encryption on/off, scanning on/off, nonhazard zone selection, or other functions.

A.11.3.1(5)

The three-position switch is typically programmed to provide three banks of channels, talkgroups, or talk paths. This switch, together with the selector knob of Section 11.4, provides a total of 3 × 16 = 48 channels, talkgroups, or talk paths.

A.11.3.5(2)

The side programmable button can be used for a number of functions. One possibility is that this button plus the volume on/off can be activated simultaneously to completely power down the device to prevent accidental powering down of the device *(see 11.2.2.2)*. Another possible use of this button is to activate the nonhazard zone mode by turning the RF device off via turning off the volume knob and pressing the side programmable button, then turning the RF device back on by turning on the volume knob and pressing the side programmable button. Longer or shorter presses of the side programmable button could also activate additional functions, such as receive scan on/off, although this might add some ergonomic complexity for users.

A.11.3.6

The purpose of the transmitter time-out timer is to ensure that if a short occurs on a PTT, the RF device experiencing that failure doesn't tie up the channel more than the time set by the time-out timer. This requirement is also in conformance with NFPA 1225.

A.11.5.2

The selector knob of the RF device can change various things depending on whether the RF device is operating in a conventional system or a trunking system. The things that are changing are called the "mode." For example, on a particular position of the selector knob, the AHJ might determine that the user is operating in a conventional system. In this case, the selector knob will be changing channels, which means the transmit and receive frequencies, and transmit and receive continuous tone-coded squelch system (CTCSS) tones, and perhaps other items such as unit ID signaling, are all being selected and activated.

Then on another position of the selector knob, the AHJ could determine that the user is operating in a trunking system. In this case, the channel selector position will be determining the talkgroup that the user will be affiliated with. In general, in a trunking system, the specific talk path (i.e., the transmit and receive frequencies) will be determined by the trunking controller, and the RF device will automatically use those frequencies that are assigned by the trunking controller for that talkgroup.

It is common practice for AHJs to program the main channel, talkgroup, or talk path most frequently used by the responders, in both the first and sixteenth positions, so that the responder can merely turn the selector knob either way until it reaches its stop, and know that they are on the main channel, talkgroup, or talk path.

A.11.8.5

Once a user activates the emergency alert function, whether deliberately or accidentally, the emergency alert function will activate all units on scene that are on that same talkgroup or channel. The AHJ can determine who will have the authority to cancel the emergency function.

A.11.8.7.2.1

These other signaling schemes are often used by AHJ radio systems to provide ID, emergency alert, and other functions, typically in conventional (i.e., not trunked) radio systems. TSBK is the signaling format used in P25 trunking systems, and in this case the standard is requiring the same signaling format for conventional systems as well for ID and emergency. This is to ensure interoperability among units that might be called in to a mutual aid incident in a jurisdiction that uses a conventional radio system. However, it is not the purpose of this standard to force AHJs to change their current radio system to utilize this TSBK signaling format if another format is already in use. Hence, AHJs can utilize another format. However, the following points need to be made:

(1) Use of another format, such as MDC 1200, is in addition to TSBK signaling. This means that every transmission from a device will thus include both signaling formats. Depending on how this is configured, this might mean that voice transmission time is delayed by several hundred milliseconds to a second. AHJs need to consider the operational implications of that delay.

(2) Some AHJs deliberately program their radios with a wait tone to allow the signaling or the trunking channel to be served up prior to allowing a user to transmit voice, to avoid the first word or syllables from being dropped.

(3) In a trunked P25 radio system, TSBK signaling is already employed, so there is no need for AHJs to be concerned in that case about the TSBK signaling — it is already there.

A.11.8.8(1)

The AHJ can select the protocol or protocols appropriate for operational/infrastructure requirements, as required.

AHJ selectable options for when the EAB is activated include the following:

(1) Remain on selected channels, talkgroups, or talk paths for electrically initiated device (EID) transmission

(2) Channels, talkgroups, or talk paths revert to a preprogrammed EID transmission channel, talkgroup, or talk path

After the radio transmits the radio ID, the AHJ can also then select one of the following options:

(1) Remain on the selected channel, talkgroup, or talk path

(2) Revert to preprogrammed channels, talkgroups, or talk paths for transmission of all subsequent voice traffic

A.11.8.8(2)

Reverting to a preprogrammed channel, talkgroup, or talk path could be for moving all incident units to another incident ground channel, talkgroup, or talk path if there is a downed/trapped responder; or moving a downed/trapped responder to a “downed/trapped responder channel, talkgroup, or talk path” (most AHJs don’t recommend or do this because of the difficulty a downed/trapped responder might have in manipulating correctly the RF device controls); or to move responders on the RIT/RIC/RID/FAST team to their own channel, talk group, or talk path.

A.11.8.9.2.2

At large or long duration incidents, it is possible that multiple emergency alarms may occur. This provision allows all the emergency alarms to be captured, if correctly received by receiving units, and stored and displayed, so that the incident commander, safety officer, telecommunicator, and others do not lose accountability of the responders that have called for help.

A.11.9.5

The AHJ can program this option button for various purposes as it deems fit, to enhance ESP safety. Some of the uses for which this button might be programmed could include, but are not limited to, the following:

(1) Revert to a “home” radio channel or talkgroup regardless of the selector knob position on the RF device, if the selector knob on the RF device is accidentally turned by movement of the user.

(2) Toggling between two to four channels/talkgroups such as dispatch, incident ground A, incident ground B, or RIT/RIC.

(3) Toggling between two or three receive audio levels on the RSM (e.g., the level set by the volume knob on the radio, 6 dB higher than that volume setting, and 6 dB lower than the volume setting).

(4) This one button might be able to be used for multiple functions, such as toggling volume and toggling channels/talkgroups, by utilizing short presses for one function and long presses for another.

See SF

A.11.10.1.1

The AHJ has the option of not ordering the RFDC plug with the RF device.

A.11.14

This can be typically found in a trunked radio system, although some manufacturers have applied this to conventional systems as well. AHJs should carefully evaluate how this feature is implemented in RF devices that they are contemplating using.

SR-75 Hide Legisl

A.11.15

Table A.11.15(a) is a summary of the various ergonomic outputs of the RF device or RSM per this standard.

Table A.11.15(a) Ergonomic Outputs of RF Devices or RSMs

Feature	LED	Display	Voice Ann. 6.11.5	Notes
Battery indic, device		Icons, flashes if <25%		
Emergency initiator, RF device	Flashing orange	EMERG SENT	“Sending emergency”	Audible tone at max vol.
Emergency-receiver, RF device	Solid orange	ID of initiator	“Receiving emergency”	3-sec. tone max vol; go to max receive volume
IDs during emergency				14 char. alpha-numeric; last 20; 3K entries
Display				8 characters, additional with scrolling; backlit illum. 2 sec.
RF device	Solid grn RX, solid red TX			
RSM	Solid grn RX, solid red TX			
RSM, emergency initiator	Flash orange			
RSM, emergency receiver	Flash orange			
Accessory failure, failsafe protocol	Solid orange	FAIL ACCSRY	“Failed accessory”	
Accessory error, error protocol	Flashing yellow	ACCSY ERR	“Accessory error”	
Out of range	Flashing yellow	NO SIGNAL	“Out of range”	1-sec. tone every 15 sec. 70% volume
Self-test	Solid red	TEST FAIL	“Self-check fail”	
Over temperature	Solid orange	OVER TEMP	“Over temperature”	At maximum volume
Bluetooth® pairing	Solid blue			
Cumulative over temperature	Solid orange	OVER TEMP	“This device has been exposed to extreme temperatures”	
Nonhazard zone mode Antenna failure	Solid orange	FAIL ANT	“Device in nonhazard zone mode” «Failed antenna »	

Table A.11.15(b) is a summary of the various ergonomic outputs of RF devices or the RSMs per this standard, including those that have AHJ programmable alerts and indications.

The RSM can display event indicators as listed in Table A.11.15(b) for the RF device, if it is capable.

Table A.11.15(b) Ergonomic Outputs of RF Devices or RSMs

Event	Device	LED	Display	Audible	Notes
Battery charge remaining	RF device		Icons as specified in Figure 11.1.5	”Battery critical”	At least every ten minutes when less than 25% capacity
Emergency - initiator	RF device, RSM	Flashing orange	Flashing orange:	Alert tone	User ID sent; Audible recurring tone at max volume; subsequent transmissions at highest rated power until cleared
Emergency - receiver	RF device, RSM	Flashing red	Steady orange; ID of Initiator	Alert tone	Audible recurring tone at max volume until cleared
Transmit	RF device, RSM	Steady red			

Event	Device	LED	Display	Audible	Notes
Receive	RF device, RSM	Steady green			
RSM failure	RF device	Steady orange	Steady orange: “FAIL ACCSRY”	“Failed Accessory”	Maximum volume
Out of range	RF device, RSM	Flashing yellow	Flashing red	Alert tone	1-sec. tone every 15 sec.; 70% volume
Self-test		Solid red		“Self-check fail”	
Over temperature	RF device	Steady orange	Steady orange: “OVER TEMP”	“Over temperature”	At maximum volume
Bluetooth® pairing success	RF device, RSM	Solid blue	Solid blue		
Cumulative over temperature	RF device	Steady orange	Solid orange: “OVER TEMP”	RF device has had long exposure to extreme temperatures	
Cumulative over temperature	RSM	Steady orange		Radio speaker mic has had long exposure to extreme temperatures	
Nonhazard zone mode	RF device			Device in nonhazard zone mode	
Antenna failure	RF device, RSM	Steady orange	FAIL ANT	«Failed antenna »	At maximum volume

A.11.17.1

The purpose of detecting an over-temperature event is to alert users that the RF device or the RSM has been exposed to a high temperature such that the features and operation might be seriously impaired. It might also have other uses, including maintenance records, and forensic investigations where a tragic event occurred in connection with the use of the RF device or RSMs.

A.11.17.6.3

The reason for maintaining the distinction between the two items is because some AHJs might have to make a decision whether to “repair or replace” RF devices or RSMs that are exposed to extreme temperatures, and knowing which unit has the exposure can be helpful.

A.11.18.2(1)

Connectivity of the RSM or compatible device is important because if it fails, depending upon the method used to wear the RF device, it might be impossible for the first responder to properly use the RF device or its features, such as the EAB.

PCs [1] SR-21 Hide Legisl

A.11.23

For decades, the explosion protection requirements for RF devices have traditionally been derived from intrinsic safety (IS) requirements, while the explosion protection requirements for thermal imagers have traditionally been derived from nonincendive (NI) requirements. Both of these explosion protections are from *NFPA 70, National Electrical Code (NEC)*. The *NEC* provides requirements for fixed electrical power installations in hazardous (classified) locations such as refineries and grain elevators. The use case for fire service portable devices is different in many ways from fixed electrical installations. In addition, changes were made recently in how testing organizations test certain fire service devices for explosion protection (e.g., RF devices). These changes provided an opportunity to revisit what the exact level of explosion protection is really required for portable devices used in the fire service. The committee has spent a significant amount of time looking at the various issues, reviewing the past history of incidents, and talking to industry experts. This standard, with regard to explosion protection, reflects that extensive analysis and the resulting decision. The following information is an explanation of some of the many issues and trade-offs that were considered during this process.

First, the term *certified on delivery* warrants explanation. The firefighter faces many varied operating conditions and therefore needs equipment that can span those multiple conditions. Designing for hazardous locations, as classified by the *NEC*, is done with standards that often assume permanent mounting of electrical fixtures within a defined area. None of those areas approaches the environment found within any structure fire. As such, there is no established set of failure mechanisms, practices for design, or means of testing and validation that would make a product certified for use in an *NEC*-classified area retain its “guarantee of safety” in a structural fire. In other words, a product designed and certified for even the most hazardous conditions can lose its “guarantee of safety” after its first exposure to adverse environments commonly found on the fireground. In a sense then, the pursuit of traditional *NEC* IS certifications might not have provided the level of assurance that the fire service in fact thought it did. Because the purpose and scope of this document is first and foremost rooted in defining a product suitable for use on an active fireground, it cannot be ignored that one of its requirements can be invalidated by the resulting product’s intended use case.

Next, there is the reality that to date in the United States, there has been no known instance of a fire service portable thermal imager or RF device ever having caused an explosion — it should be pointed out that many fire service organizations do not use IS-rated portables, so this fact is especially notable. The task group investigated the prior history with multiple organizations, determined that there were only three possible incidents, and upon detailed investigation determined that none of them had anything to do with the portable device.

However, there remain multiple first-responder missions in environments that do resemble *NEC*-classified hazardous locations. These include incident scenes without a current active fire, such as fuel spills and reported or actual gas leaks. These environments resemble classified hazardous locations in that there is likely a presence of an ignitible atmosphere; however, they differ in the following ways from what was envisioned in the *NEC* for explosion protection certifications:

(1) In these areas, there is likely to be multiple pieces of commercial or industrial equipment not designed to any explosion protection standard and, by their very nature, could be capable or even likely of igniting an atmosphere in normal or intended operation. In contrast, products designed for use in *NEC*-classified environments are designed so as to prevent the chance of combustion under normal operating conditions (i.e., Division 2 classified areas) or for situations where there are multiple fault conditions (i.e., Division 1 classified areas).

(2) Devices used by the firefighter spend much of their product life in relatively benign environments, interrupted by brief excursions into extremely hostile environments where combustion is often taking place. Due to the transient nature of this exposure, there is only a small window of time where the benefit of a product designed for use in an explosive atmosphere is of value. By contrast, products designed for use in *NEC*-classified Division 1 hazardous locations utilizing IS as the type of explosion protection, are intended for continuous use in those environments.

(3) Portable electrical devices used by first responders have multiple items that can either be disconnected or replaced, such as RSMs, batteries, and interfaces to self-contained breathing apparatus (SCBA) masks. For example, IS-rated portable radios come with instructions not to change the battery in a hazardous environment. However, it is very possible that the RSM connection could accidentally become disconnected in the hazardous atmosphere. By contrast, fixed electrical installations in hazardous areas are physically interconnected by secured conduit and cable systems to the enclosures. This minimizes the likelihood of any sparks from being created within the area that contains the hazardous material, and also contains any explosions that might occur.

It is recognized that it might be desirable to obtain the level of confidence and safety resulting from the inherent explosion protection design techniques required to gain certification for use in *NEC*-classified Division 1 hazardous locations. However, currently no solution exists that would enable a product to retain its “guarantee of safety” during or after exposure to the extreme environment of an active fire. It is this intent that is captured by the term *certified on delivery*. There is an expectation that both the users and the AHJ will monitor explosion-protected equipment for continued fitness for use, including regular visual inspection for obvious compromise, examination and replacement of aging or damaged batteries, and periodic maintenance as prescribed by the manufacturer.

Therefore, at this time, this minimum standard requires Division 2 NI certification for portable devices. This does not stop vendors and the fire service from pursuing Division 1 IS certified portable devices if they so desire.

A.11.23.1

An SCBA is an example of a compatible device.

A.12.1.1.2

A consistent complaint from ESP with current RF devices and RSMs is that voice traffic on the incident scene is often distorted and unintelligible. This standard requires a speech quality result score for voice quality of 2.5 for the RF devices and RSMs covered by this standard. This speech quality testing is done end-to-end (e.g., from mouth to ear) to ensure that it attempts to test as closely as possible what the end user will experience in using the equipment. This should provide an incentive to the industry to address the recurring issue of voice intelligibility. Speech quality allows automated testing of voice quality and hence helps ensure testing repeatability and reduced testing cost. It also equally applies to both analog and digital technologies. It will be noted that after each major physical stress test, a speech quality test is made to ensure that the voice quality will remain adequate during an incident even when the equipment covered by this standard has been physically and electrically stressed.

A.12.3.2

To prevent damage to test equipment, a DC block should be used on the antenna port when performing the RF measurements in Section 13.15 through Section 13.18. One option is RF Lambda RFDCBLK26SMA. Losses must be calibrated out before the measurement is made.

A.13.1.1.7(2)

Analog voice is the minimum operational mode for incident communications per 17.3.1.4 of NFPA 1225; therefore, it is this mode of operation that will be tested, at a minimum, in this standard.

A.13.2.1.8

Test signals are downloadable at www.ap.com/download/pesq-speech-waveforms.

See SF

A.13.2.1.12.1

Speech reference files in 13.2.1.12.1 use the default file names for PESQ speech signals when they are obtained from an audio precision speech quality analyzer, and are publicly available for download at www.ap.com/download/pesq-speech-waveforms/.

See SF

A.13.2.1.12.2

During development of this test method, it was found that direct application of PESQ reference files in a land mobile radio (LMR) conventional FM communications system resulted POLQA scores that were not representative of the voice quality perceived by human observers. Conventional FM LMR systems remove audio information below 300Hz. When the reference files are high-pass filtered and level normalized, the POLQA scores more closely reflect the speech quality perceived by human observers.

A.13.2.1.14(3)

The reference level 0.0 dBu is interpreted to be the level of audio quality analysis that achieves the best score.

A.13.2.1.15(3)

The reference level 0.0 dBu is interpreted to be the level of audio quality analysis that achieves the best score.

A.14.1

Ground ladders used in the fire service must be constructed to rigid standards to ensure that the ladders are of the highest quality. These ladders often provide the only means of firefighter entry into a building or portions of a building and could be the only means of egress for victims trapped by a fire within a building. Fire department ground ladders serve as a path for firefighters to transport people, equipment, and extinguishing agents from one level to a higher or lower level. Because the lives of firefighters and fire victims often rely on the performance, without failure, of these valuable pieces of fire department equipment, these standards of performance are critical.

A.14.2

It is recognized that specific details on ladder construction materials have been established by other organizations such as the American National Standards Institute, US Department of Agriculture Forest Products Laboratory, and the Aluminum Association. This standard should never be interpreted as establishing lower materials strength criteria than what might be set forth in other recognized standards such as these.

A.14.3

The service testing procedures contained within this standard are based on the design criteria that are specified in the editions of NFPA 1931 since 1984. The 1984 edition of NFPA 1931 included significant increases in the required strength of ladders, based on information and technology that became available after the issuance of the 1979 edition of NFPA 1931. The new information was related to dynamic loads that resulted from the actual use of ground ladders.

Ladders that were constructed to comply with earlier editions of NFPA 1931 were designed for lesser loads and less demanding test requirements that were the state of the art at that time. The new criteria are believed to be more accurate and provide a higher level of safety.

A.14.3.2

Continued exposure to a heating source or direct sunlight will cause wood ladders to deteriorate.

A.14.3.3

Continued exposure to direct sunlight will cause ultraviolet erosion of the surface of fiberglass ladders, causing the glass fibers to become exposed.

A.15.1.1

Ladders used by fire department personnel solely at fire stations for maintenance and reaching high places should be covered by the applicable ANSI and OSHA standards for the same.

A.15.1.2

Multipurpose ladders are typically manufactured in accordance with commercial standards and have a typical duty rating of only 136 kg to 170 kg (300 lb to 375 lb), which is far less than that of a ladder manufactured in accordance with NFPA 1931. As such, multipurpose ladders should be loaded with only a single person and not used for the rescue of victims where both the victim and the firefighter are required to be on the ladder simultaneously.

A.15.1.3

The design criteria for ladders are based on the weight of a firefighter with protective clothing, SCBA, and equipment being 113 kg (250 lb). Ladders rated for 136 kg (300 lb) are designed for one person. Ladders rated for 340 kg (750 lb) are designed for a maximum of three persons on the ladder at any time. On a three-person ladder, not more than two persons should be grouped together, such as a rescuer and a victim.

Ladders are designed so that the stress on the ladder structure and component parts or materials does not exceed 25 percent of the yield strength of the structure, component parts, or materials when the ladder is statically loaded in accordance with Table 15.1.3.1.

A.15.1.8.2

Using a ladder at an angle less than 70 degrees drastically reduces the ladder’s load-carrying capacity. Using a ladder at an angle greater than 76 degrees dramatically reduces the ladder’s stability.

A.15.1.9

Mechanical means of securing a ground ladder can include trying a lower rung or the beams to a bar driven into the ground or to a fixed object directly under the ladder near the ground.

A.15.1.9.1

Using a ladder at an angle less than 70 degrees drastically increases the possibility of ladder slippage.

A.15.2.3

Tying off or securing the halyard provides a secondary method of securing the fly section in the event of pawl disengagement. When a continuous halyard prevents tying off, a camlock, as is used for securing a sailboat halyard, might be used.

A.15.2.6

The use of one staypole introduces an artificial twist in the ladder that is dangerous to the climber and can cause permanent damage to the ladder.

A.15.4

Wood materials normally do not conduct electricity. However, under conditions of high voltage or moisture, contamination on the wood surface can conduct enough electricity to cause injury or death. Therefore, caution should be used around electrical wiring.

A.15.5

Fiberglass materials normally do not conduct electricity. However, under conditions of high voltage or moisture, contamination on the fiberglass surface can conduct enough electricity to cause injury or death. Therefore, caution should be used around electrical wiring.

A.16.1.3(7)

Halyards should still comply with NFPA 1931 when replaced.

A.16.1.3(16)

NFPA 1931 has required the following labels on new ground ladders since 1984:

(1) Electrical hazard warning label

(2) Ladder positioning label

(3) Staypole positioning instruction label

(4) Length designation markings

Labels should still comply with NFPA 1931 when replaced.

A.16.1.4.1

It is suggested that a tag with a distinctive color be used to mark ladders as out of service and that the tag be fastened to the ladder in a manner that it cannot be removed accidentally.

A.16.2.5

When reinstalling ladder pawl assemblies, caution must be used to prevent overtightening of pawl assembly fasteners, as this causes binding of pawl assembly parts. Figure A.16.2.5 illustrates the parts of a pawl housing. Replacement springs and parts are available from the ladder manufacturer.

Figure A.16.2.5 Pawl Housing Showing Parts.

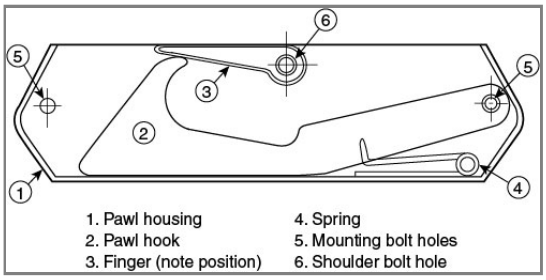

A.16.2.7

Replacement halyards should not be less than 9.5 mm (⅜ in.) in diameter with a minimum breaking strength of 374 kg (825 lb). They should be of sufficient length for the purpose intended and should not be spliced. Wire rope should have a 5 to 1 safety factor while supporting two times the dead load weight of the fly section(s) that the wire rope is intended to raise.

A.17.1.1

It is the intent of the committee that all the tests defined in this standard be performed. Other tests, when approved by the manufacturer, can be performed, but not in lieu of the requirements of this standard.

A.17.1.2

The authority having jurisdiction contracting with a testing organization for testing fire department ground ladders should evaluate the qualifications and experience of the testing organization. If there are questions about the applicability of any test, contact the ground ladder manufacturer.

A.17.1.3

Wood ladders are particularly vulnerable to damage, and weakening might not be readily visible and might cause failure when such ladders are used in emergency situations.

Personnel performing the tests should at a minimum use safety glasses and safety shoes.

A.17.1.6(6)

Discoloration beyond dirt or soot that cannot be easily washed off is often an indication that the ladder has been heated.

A.17.1.8.1

It is suggested that a tag with a distinctive color be used to mark ladders as out of service and that the tag be fastened to the ladder in a manner that it cannot be accidentally removed.

A.17.2.1

The horizontal bending test uses the horizontal position to make the testing procedure easier and safer. This position also provides a safety factor when compared to the same load at an angle of 75½ degrees. This safety factor is necessary to account for the dynamic forces that might be created by moving loads on the ladder as it is used *(see also A.14.3 and A.15.1.3)*. The horizontal bending test is not designed to test a ladder for use as a bridge but rather to provide a test to ensure a safe ladder when it is used in the elevated position.

A brand new ladder has manufacturing tolerances that might give a false reading the first time the test is run. These false readings are less likely to occur on a ladder that has been in service and has been climbed prior to being tested. Therefore, either a new ladder should be set up and climbed several times prior to being tested, or the test should be run on the ladder one time without counting the results and then repeated as the official test.

A.17.2.1.4(4)

If the ladder recovers before the 5 minute resting period, within the parameters of Table 17.2.1.4, the ladder has passed the horizontal bend test.

A.17.2.2(5)

Many roof ladders manufactured prior to 1984 were equipped with mild steel roof hooks 16 mm (⅝ in.) in diameter that do not meet the requirements of the roof hook test. Alloy steel (chrome-moly) roof hooks 16 mm (⅝ in.) in diameter or mild steel roof hooks 19 mm (¾ in.) in diameter normally do meet the roof hook test requirement.

A.17.4.1(6)

If the ladder recovers before the 5 minute resting period, within the parameters of Table 17.2.1.4, the ladder has passed the horizontal bend test.

A.18.3

Where a specific condition involving rescue tools and lifting bags is identified, the organization's SOPs should cause the rescue tool and lifting bag manufacturer to be promptly notified of the specific condition(s) or cause and the circumstances involved with the specific condition(s) or cause.

A.18.4.6

As part of the risk assessment program, the organization should ensure that all users are trained in the proper operations and use of rescue tool and lifting bag systems in accordance with the manufacturer's instructions. Members using or responsible for rescue tools or lifting bags should be permitted to return a rescue tool or lifting bag to its original condition and manufacturer's specifications by way of any field-level or technician-level adjustments and necessary maintenance work or repair efforts.

A.18.5.2

For currently-in-service lifting bags that are not certified as compliant with NFPA 1936, it is recommended to apply a 15-year service life from the date of manufacture.

A.19.1.1.2

The organization should review the relevant sections within the following standards and regulations as a minimum:

(1) NFPA 1936

(2) NFPA 1500

(3) NFPA 1006

(4) NFPA 2500

(5) National, state, local, and provincial regulations

A.19.2.1.2

The organization should review the following standards and regulations as a minimum:

(1) NFPA 1936

(2) NFPA 1006

(3) NFPA 2500

(4) NFPA 1500

(5) National, state, local, and provincial regulations

A.20.2.1.6

This inventory check can include accountability for items such as rescue tools, power units, cutters, spreaders, rams, combination tools, hoses, hose reels, batteries, chargers, and accessories.

A.21.1.2.3.2.2

Some examples of test equipment are torque wrenches, pressure gauges, force gauges, and certain electrical equipment. However, there might be more equipment that needs to be calibrated.

A.21.2.2.3.4.2

Some examples of test equipment that should be calibrated are torque wrenches, pressure gauges, force gauges, and certain electrical equipment. However, there might be more equipment that needs to be calibrated.

A.22.1.5

Metric units of measurement shown in this standard are in accordance with the modernized metric system known as the International System of Units (SI). The liter unit is outside of but recognized by SI and commonly is used in international fire protection. Table A.22.1.5(a) provides the conversion factors to be used if more precision is desired. IEEE/ASTM SI 10, *American National Standard for Metric Practice*, provides additional information. Table A.22.1.5(b) provides a list of abbreviations for units of measure.

Table A.22.1.5(a) Conversion Factors

Metric to inch-pound	Inch-pound to metric
1 bar = 14.492 psi	1 psi = 0.0690 bar
1 kPa = 0.145 psi	1 psi = 6.895 kPa
1 kg = 2.205 lb	1 lb = 0.454 kg
1 mm = 0.039 in.	1 in. = 25.40 mm
1 m = 3.281 ft	1 ft = 0.305 m
1 m^2 = 10.764 ft^2	1 ft^2 = 0.0929 m^2
1 m^3 = 35.32 ft^3	1 ft^3 = 0.028 m^3
1 slug = 14.594 kg	1 kg = 0.0685 slugs

Table A.22.1.5(b) Abbreviations for Units of Measure

Abbreviation	Unit
ft^2	square foot
ft^3	cubic foot
in.	inch
kg	kilogram
kPa	kilopascal
lb	pound
m	meter
mm	millimeter
m^2	square meter
m^3	cubic meter
psi	pound per square inch

A.22.2.2

Attack-grade hose can be used in applications designed for occupant-use hose. It is not the intent of Chapters 22 through 26 to require the testing of attack-grade hose used in an occupant-use hose application any more frequently than is required by Section 22.3. It is the intent of this standard that attack-grade hose installed on racks or reels or in hose houses and designed to be used by a fire department or fire brigade be tested in conformance with Section 22.2.

A.22.2.5

Wet hose accelerates mildew growth and rusting.

A.22.2.6

The use of 100 percent synthetic yarn–reinforced hose has increased rapidly. This type of hose should be thoroughly drained and dried before being reloaded on the apparatus hose bed, because if damp or wet, it will form mildew. Although being loaded damp or wet will not affect the hose itself, it does cause undue rusting of the apparatus body and increases the potential of dry rot in the wood flooring under the hose.

The use of a protective hose bed cover is recommended to protect the hose load from unintentional deployment, weather damage, and other physical damage. Where covers are provided, care needs to be taken to permit free circulation of air under the cover to reduce mildew growth. Covers should be made from flame-resistant materials and secured to the apparatus in a manner that prevents them from blowing off while the apparatus is in motion.

Where the humidity is 70 percent or greater or where hose is for municipal use, jackets with cotton yarns should be treated with water repellents and against mildew.

A.22.2.7

Excessive edge wear can occur when 100 percent synthetic yarn–reinforced hose is loaded on the apparatus in the conventional manner (horseshoe load, accordion load, or skid load). To prevent this edge wear, hose manufacturers recommend that if 100 percent synthetic yarn–reinforced hose is used, it should be loaded on the apparatus in the flat load manner.

Best fire department and forestry practice is to remove the hose from the apparatus at least once a month. Water should be run through the hose quarterly and the hose thoroughly dried before being replaced on the apparatus.

The user should contact the manufacturer of the hose for advice on how often the hose should be removed from the hose bed and repacked.

Failures in short lengths of supply hose, also called soft suction hose, generally occur when this hose is carried on the apparatus folded and either tied down or placed in a small compartment. Where hose is constantly folded at the same points, the folds place considerable stress on the warp threads. If space limitations prevent varying folding positions, the hose should be carried in a roll on a step or running board. Many fire departments keep one end of the hose preconnected to the suction side of the pump, which decreases the time for hydrant hookup.

A.22.2.10.1

Supply hose should not be used to directly supply attack lines, master stream appliances, portable hydrants, manifolds, and standpipe and sprinkler systems because the operating pressures often exceed 185 psi (12.8 bar or 1275 kPa). Furthermore, many of these applications have valves in the line that could be closed rapidly, creating water hammer.

Since 1987, all hose built to the requirements in NFPA 1961 for supply hose has been required to be at least 200 psi (13.8 bar or 1380 kPa) service test [185 psi (12.8 bar or 1275 kPa) operating pressure]. Some 6 in. (150 mm) and larger hose might not be built to that standard and, therefore, might have a lower maximum operating pressure.

A.22.2.10.2

Relief valves normally installed on fire department pumps to control discharge pressures are not adequate to perform this function.

A.22.2.10.2.1

A pressure control device can be an internal relief that discharges to the atmosphere, to a tank, to the ground, back to the pump, or to an electronic governor.

A.22.2.11.1

When attack hose is being hoisted, damage can be avoided and the task made easier by use of hose rollers. Synthetic yarn–reinforced hose is more susceptible than cotton yarn–reinforced hose to damage from hot embers and radiant heat.

A.22.2.11.2

If hose must be crossed, vehicles should have sufficient clearance to cross without contacting the hose.

A.22.2.11.3

To control water hammer when opening a water supply controlled by a quick-acting valve, such as a ball valve, to the valve and should be “cracked” and water allowed to fill the system before the valve is opened completely.

A.22.2.11.6

During freezing weather, it is common practice to place the nozzle out a window and, by “cracking” the valve, keep water moving through the hose while overhaul is in process.

A.22.2.12

Avoid sharply bending hose in or on which ice has formed, as frozen hose can easily be damaged by a sharp bend. Use care in removing hose from ice after a fire. Steam is useful in removing ice from hose.

A.22.2.13

At structural fires, fire hose is exposed not only to heat from fires but to products of combustion,,burning embers, broken glass, nails, and other sharp objects.

A.22.3

Figure A.22.3 shows a Class II standpipe system with 1½ in. (38 mm) occupant-use hose.

Figure A.22.3 Typical Standpipe and Fire Hose Rack Arrangement. ***(Courtesy of National Aeronautics and Space Administration.)***

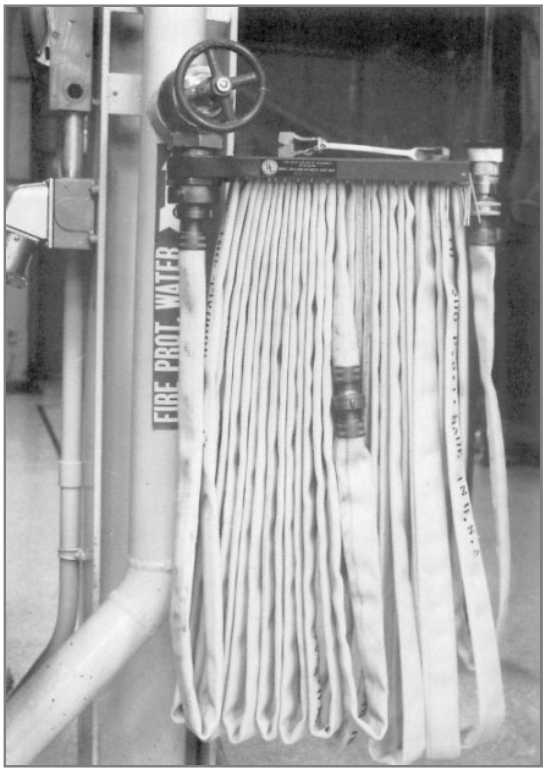

A.22.3.5.1

When the humidity is 70 percent or greater, hose jackets with cotton yarns should be treated with water repellents and against mildew growth.

A.22.3.5.3

Typical hose houses are shown in Figure A.22.3.5.3(a) and Figure A.22.3.5.3(b). The hose house in Figure A.22.3.5.3(b) is shown closed. The top lifts up and the doors on the front open for complete accessibility.

Figure A.22.3.5.3(a) Hose House of Compact Dimensions for Installation over a Yard Hydrant. Construction can be steel or aluminum.

Figure A.22.3.5.3(b) Steel House of Compact Dimensions for Installation over a Yard Hydrant.

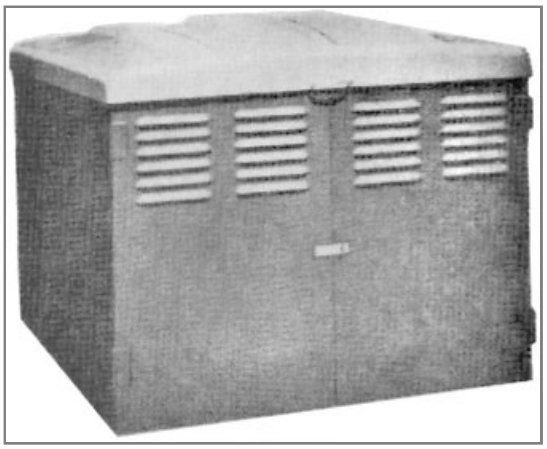

A.22.4.5

To maximize the life of hose, it should be stored in a ventilated area at temperatures between 32°F and 100°F (0°C and 38°C).

A.22.5.3

To maximize the life of hose, it should be stored in a ventilated area at temperatures between 32°F and 100°F (0°C and 38°C).

A.22.5.6

If the fire department responds to areas where water is obtained from dry hydrants, a double female adapter with threads used on the dry hydrant on one side and NH standard thread on the other should be provided *(see Figure A.22.5.6)*. Suction hose should not be used to connect to municipal hydrants, because much of the suction hose is not intended for use under positive pressure and such use can also damage the water system.

Figure A.22.5.6 Intake Connections from Dry Hydrant to Pump.

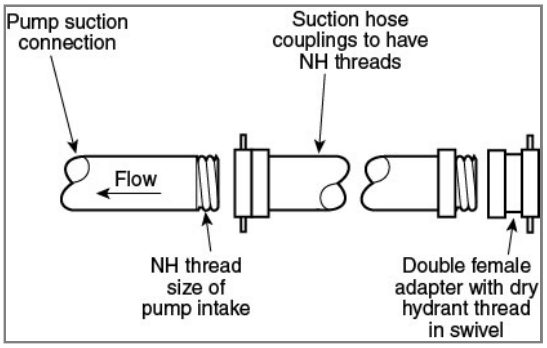

A.22.6.3.2

Liner delamination and degradation can occur as fire hose ages. Delaminated liners can cause plugged nozzles or can cut off water supply to pumps, which are potentially serious fireground problems.

Even if a hose passes the annual service test, liner delamination can be present. Some signs of possible liner delamination include the following: hose leaks without obvious exterior hose damage, hose leaks throughout an extended portion of the hose length, the appearance of water droplets on the outer surface of a pressurized hose, and lumps or irregularities in a drained hose. To verify attack and supply hose liner integrity, reach inside each end of the hose and try to pinch the liner. If it can be pinched, delamination has begun. To further confirm liner delamination, cut through the hose a few inches from the fire hose couplings and examine the liner's adhesion to the hose jacket. Remove the hose from service if there is any sign of delamination. When liner delamination is found, it is highly probable that all other hose of the same age and from the same lot will also have liner delamination. If so, the entire lot of such hose should be removed from service and inspected.

A.22.7.1

For washing, use a scrub brush, mild soap or detergent, and water. A mechanical washer can be used where hose is used frequently or a large number of hose lengths need to be washed. Avoid constant washing of cotton jacket hose treated for mildew resistance, as this will remove the treatment. Commercial hose washers are available, although many fire departments have constructed their own.

A.22.7.5

There are a number of ways to dry hose. Tower drying has proved successful, but care should be taken to properly ventilate and control the temperature of the tower so the hose will not be damaged by excessive heat. It is poor practice to suspend hose from fire hose couplings.

The design of hose towers should meet all applicable building, electrical, and safety codes and requirements. Firefighters should be made aware of the hazards associated with hose-drying towers, the protective equipment they should wear while working in a hose tower, and the correct method for raising and hanging wet fire hose, as well as retrieving dry hose.

Commercial hose dryers that force warm air through a cabinet in which hose is loosely coiled on wire racks are also available. However, while this process dries the outside jacket, it might not allow for thorough draining of the inside of the hose.

Inclined hose racks are often used, and most existing stations can accommodate such racks. The racks should be located where the sun or excessive heat will not damage the hose. The rack has the advantage of allowing the hose to drain internally while providing a drying area from which firefighters can easily load and unload hose.

A.22.8

Storage racks are commercially available, but many users have built their own to fit their particular needs.

A.22.9.2

The service test pressure for hose manufactured in July 1987 and after to meet the requirements of the 1987 and subsequent editions of NFPA 1961 is stenciled on each length of hose as follows: "Service Test to ____ psi per NFPA 1930" or "Service Test to ____ bar per NFPA 1930."

A.22.9.4.4

Hose is tested in lengths not exceeding 300 ft (91 m) to allow the hose to untwist and be straightened out. As the pressure rises, the shorter length will allow the hose to assume a natural elongation, creating less warp in the hose.

It is also important that all the air in the hose be removed. If any point in the hose layout is elevated, air will be trapped at that point. Excessive lengths make it difficult to exhaust all the air. The ideal hose test area will have a slight upward incline from the pressure source to the capped end. This allows the air to flow to the capped end and be bled off. There should be no humps or valleys in the hose between the ends, as these will trap air.

A.22.9.4.6

The surface on which the hose is laid out should be as smooth as possible. Rough surfaces will accelerate abrasion and hinder proper movement of the hose line.

A.22.9.4.7

A short length of smaller diameter hose with the same or higher proof pressure should be used to connect the pressure source to the hose being tested.

A.22.9.4.8

Stationary pumps and pumps on fire apparatus are designed for pumping substantial flow volumes at moderate pressures. The use of such pumps when testing hose at moderate to high pressures with very little flow, or possibly no flow, can cause overheating of the water in the pumps as well as recirculation cavitation operating conditions. Both the overheating and the recirculation cavitation operating conditions are known to cause permanent damage to the pumps. In addition, the hot water inside the pumps (which could be superheated steam) creates a safety hazard to personnel operating the pump or testing the fire hose.

A.22.9.4.10

Damaged fire hose should not be patched unless such repair is recommended by the manufacturer of the hose and is performed by properly trained and equipped personnel.

A.22.9.4.10.3

Removing the fire hose couplings from the hose will ensure that damaged hose that has been condemned does not accidentally get intermixed with serviceable hose.

A.22.9.5.2.4

Air under pressure becomes greatly compressed, and the hose can whip violently if the pressure is suddenly released by a hose burst. A blown-off fire hose coupling propelled by the compressed air will act like a high-velocity missile.

A.22.9.5.2.7

Hose can be expected to stretch when the pressure is increased to the test pressure. Allowance should be made for this stretch when the hose is secured.

A.22.9.5.2.9

The hose should be marked with a thin reference line located on the hose close to the fire hose coupling or collar so there is no gap between the mark and the fire hose coupling or collar.

A.22.9.6.2

The use of the hose test valve prevents a volume surge from the pump in the event a hose bursts during the test. The ¼ in. (6.4 mm) opening drilled through the gate permits the pressure to be raised to the test pressure after the hose has been filled, the air completely removed, and the hose test valve closed.

A.22.9.6.6

Air under pressure becomes greatly compressed, and the hose can whip violently if the pressure is suddenly released by a hose burst. A blown-off fire hose coupling propelled by the compressed air will act like a high-velocity missile.

A.22.9.6.8

Hose can be expected to stretch when the pressure is increased to the test pressure. Allowance should be made for this stretch when the hose is secured.

A.22.9.6.10

The hose should be marked with a thin reference line located on the hose close to the fire hose coupling or collar so there is no gap between the mark and the fire hose coupling or collar.

A.22.10.1

If booster hose is manufactured in accordance with UL 92, *Fire Extinguisher, Booster, and Noncollapsible Hose and Hose Assemblies,* the maximum working pressure will be shown on the cover of the hose.

A.22.11

The suction hose vacuum test can be run in conjunction with the annual pump suction test. In Figure A.22.11, one line runs to the pump vacuum and the other to a test gauge. A clear plastic disk at the other end used with light makes it possible to observe if the internal lining is drawn into the waterway.

Figure A.22.11 Plastic Test Disk for Pump Suction Hose. ***(Courtesy of San Diego Fire Department, Inc.)***

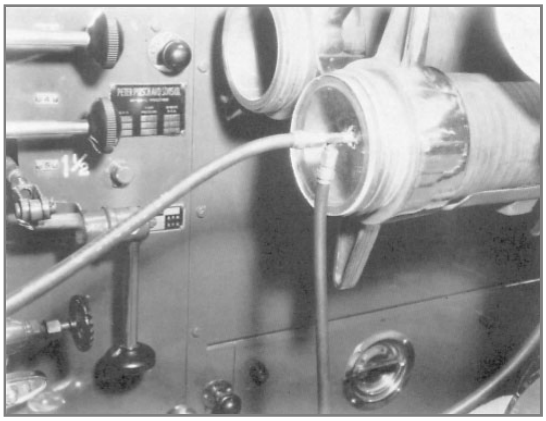

If the suction hose is designed for use under positive pressure, it might be marked with the positive service test pressure.

PVC suction hose is not designed for use under positive pressure. If unmarked suction hose is to be used under positive pressure, the user should check with the manufacturer to be sure the hose is designed for such applications and test it in accordance with the manufacturer’s recommended service test pressure.

A.22.12.1.1

Records are essential and necessary data to determine hose performance and ensure safe use in firefighting. Cost effectiveness can also be determined. This recorded information should be used for effective hose management.

A.22.12.1.2

Where hose repairs are frequent, fire hose couplings and hose lengths can become intermingled; therefore, either stenciling the hose or changing the fire hose couplings should be employed.

A.22.12.1.2.1

Paints with a petroleum solvent base can cause the bond between the liner and the jacket to fail. Water-based latex paint is not harmful to hose.

Some fire departments color-code fire hose couplings as well as various tools to identify the company to which the equipment is assigned. This enables each company to readily identify and pick up its hose and equipment at a fire. Where mutual aid operations are frequent, each length of hose should be appropriately stenciled or marked to identify the fire department owning it.

A.22.12.1.2.2

Fire hose coupling bowls can be damaged by improper stamping. The proper procedure is to insert a special steel plug with round edges into the end of the expansion ring. One sharp blow from a steel numbering die will then clearly stamp the fire hose coupling. Aluminum fire hose couplings should be stamped before they are hardcoated.

A.22.12.1.3

Because the safe use of hose requires continuous, accurate, up-to-date records, records should be maintained and stored at the company level in addition to being part of a central file. Conditions, repairs, changes, problems, and so on, should be recorded immediately for each length of hose. *(See Figure A.22.12.1.3.)*

Figure A.22.12.1.3 Example Showing Front and Back of a Hose Record Card. ***(Courtesy of Scandia Industries, Inc.)***

Hose Record Card

ID No. _____ City _____ Engine Co. _____

Size (dia.) _____ Length _____ Type hose _____ Const. _____ Cost _____

Mfr. _____ Part no. _____ Date rcd. _____ Date in service _____

Vendor _____ Cplg. mfr. _____ Type cplgs. _____

Repairs

Date	Kind	Cost	New length	New ID no.

Remarks: _____

Test Record

Service test to _____ psi

Date	Service test pres. psi	Test OK	Reason failed	Date	Service test pres. psi	Test OK	Reason failed

Date	Exposed to possible damage		Date	Reason
		Removed from service		
		Condemned		
		Sold		
		Wrnty. failure		

A.22.12.1.5

Other information recorded might include fire hose coupling threads, manufacturer of fire hose coupling and part number, length of warranty, label number, and cost.

A.22.12.1.6

The tag might also include information required for inclusion on the permanent hose record. *(See Figure A.22.12.1.6.)*

Figure A.22.12.1.6 Example of a Hose Repair Tag. ***(Courtesy of Memphis Fire Department.)***

A.22.12.2

Forestry hose is often moved from one location to another in large quantities. Many times forestry fire apparatus leaves the scene of a fire with a different complement of hose from that with which it arrived. Therefore, maintaining individual recorders of each length of hose can be impractical. As a minimum, records on stored hose should be kept at stations and fire warehouses to ensure proper inventory rotation.

A.22.12.3.3

The owner of the hose might want to keep some or all of the following information as a separate record to assist in tracking the performance of the hose:

(1) Assigned identification number

(2) Manufactured and part number

(3) Vendor from which hose was purchased

(4) Size (internal diameter of waterway)

(5) Length

(6) Type of hose

(7) Construction

(8) Date received

(9) Repairs and new length if shortened

(10) Actual damage

(11) Exposure to possible damage

(12) Reason removed from service

(13) Reason condemned

(14) Indication that the hose has been removed from service or condemned within the warranty period because of an in-warranty failure

A.22.12.3.4

Because occupant-use hose does not get the same type of use as other fire hose, methods of recording the identification number can include using bar-coded labels on the fire hose coupling, fastening metal tags to the hose, stamping fire hose couplings, or painting on the hose.

In stamping fire hose couplings, the proper procedure is to insert a special steel plug with round edges into the end of the expansion ring. One sharp blow from a steel numbering die will then clearly stamp the fire hose coupling. Fire hose coupling bowls can be damaged by improper stamping. Aluminum couplings should be stamped before they are hardcoated.

A water-based latex paint is not harmful to hose. Paints with a petroleum solvent base can cause the bond between the liner and the jacket to fail.

A.22.12.3.5

It is important that a fire inspector have ready access to records of hose inspection and tests.

A.22.12.3.6

It is important that hose that has been damaged not become intermixed with hose in storage such that the damaged hose could accidentally be put in service.

A.22.13

All fire hose has an expected service life. That life will depend on a number of factors, such as the initial quality of the hose, the type of service to which it is subjected, and the care it receives during its life. Users should develop a fire hose inspection and care program based on Chapters 22 through 26. That program should also address the retirement of fire hose.

One of the reasons for keeping good records of fire hose as required by Chapters 22 through 26 is to evaluate how different fire hoses perform over time. This will provide the experience the users need to help them determine what a useful service life is for different types of hose and make decisions on when fire hose should be retired.

Limited testing of in-service fire hose by the Fire Equipment Manufacturers Association indicates an increased risk of failure after 10 years. The testing looked at the reduction in burst pressure, ozone degradation, linear adhesion and degradation, hose strength, normal wear patterns, and UV degradation of fibers.

While all users should establish their own retirement schedule, fire department should give careful consideration to a 10-year maximum service life under normal operating conditions.

A.23.1.6

Nozzles should be washed in a solution of soap and warm water. The nozzle should be submerged and the adjustable controls operated until there is free movement. The nozzle should then be rinsed in water. The nozzle should be lubricated in accordance with the manufacturer’s instructions. Cracked rubber-covered handles on nozzles can cause accidents and should be replaced.

A.23.2.2(4)

It should never be necessary to hammer a shutoff valve to make it operate.

A.24.1.2

Many large-diameter appliances are designed for use with large-diameter supply hose, which typically has a service test pressure of 200 psi (13.8 bar or 1380 kPa). Such appliances should not be used in attack hose layouts that will require pressures above the designed operating pressure of the appliance. Hose layouts supplying elevated master streams from aerial ladders, elevated platforms, or water towers will generally be operated at pressures exceeding 250 psi (17.3 bar or 1725 kPa).

A.24.1.2.1

Extreme care should be taken the first time an appliance is service tested, particularly when the original operating pressure is unknown; the appliance could fail catastrophically and cause serious injury. It is recommended that adequate shielding be provided between the appliance and the tester to prevent injury in the event of failure.

A.24.1.7

All appliances that meet the requirements of NFPA 1965 have been subjected to a corrosion exposure test. The purpose of this test is to ensure that the appliance will perform under normal exposure to corrosive conditions, such as those found in the atmosphere near oceans or caused by chemicals used to treat road surfaces in icy conditions. When the appliance is exposed to corrosive conditions on a long-term basis or is to be used where strong corrosives are present, the user should ensure that the appliance is designed for such exposure. Hard-coated aluminum is recommended to help prevent corrosion. Chrome-plated aluminum does not offer the same protection.

A.24.2.2

Repairs to appliances should be performed by the manufacturer or a person qualified by the manufacturer.

A.24.3.1.1

A protective device can be a container designed to contain shrapnel in case of a failure or a heavy duty tarp and blast mat that will cover the appliance.

A.25.1.3

In most cases, a machine shop with the proper facilities can repair damaged threads. One way to detect any slippage of the fire hose coupling on the hose is to inspect the area where the expansion ring is located for any appreciable gap between the expansion ring and the fire hose coupling waterway. Ordinarily, the swivels can be freed satisfactorily by immersion in warm, soapy water.

A.25.1.6

On some fire hose couplings, such abuse can cause the hose bowl and swivel to go “out-of-round”; as a result, the swivel will not turn.

A.25.1.9.1

Usually, an improper fit between the internal bowl diameter and the outside diameter of the hose of more than ± 1⁄32 in. (±0.79 mm) will require the use of special hose attachment techniques and should be avoided.

A.25.1.9.2

The length of the expansion ring needs to be consistent with the length of the coupling bowl. *(See Figure A.25.1.9.2.)*

Figure A.25.1.9.2 Female Fire Hose Coupling Assembly.

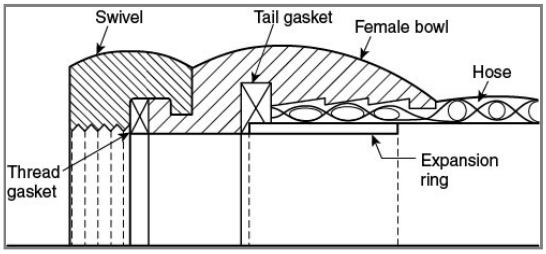

A.25.1.9.3

The tail gasket is the gasket placed in the fire hose coupling at the end of the hose to prevent leakage and to keep the fabric of the hose jacket dry. When ordering fire hose couplings and tail gaskets for recoupling hose with expansion ring fire hose couplings, it is important that the appropriate tail gasket be provided. The fire hose coupling manufacturer needs to know the outside diameter of the hose and the wall thickness of the hose to provide the proper fire hose coupling and gasket.

A.25.1.10

Multiple-piece collars or compression-type fire hose couplings attached with a shank and external binding method might not be interchangeable from manufacturer to manufacturer and among different hose constructions. The user should verify that the binding is designed for the hose and shank with which it is being used. Check with the fire hose coupling or hose manufacturer for proper assembly instructions and bolt torque settings where necessary.

A.25.1.11

A degree of skill and experience is required to properly attach fire hose couplings to hose. It is necessary to have good equipment and a mechanic skilled and experienced in attaching fire hose couplings. If not, this work should be done by the hose manufacturer. Testing of repaired or recoupled fire hose is undertaken to confirm its suitability for continued use.

A.25.2.1

A high-quality synthetic gasket with antioxidants or neoprene should be used, because natural rubber gaskets can deteriorate with age and will harden and break away from the gasket seat.

A thread gasket with a smaller diameter than that of the recess can cause a leaky connection when pressure is applied. *(See NFPA 1963.)*

A.25.2.2

If the gasket protrudes at the nozzle connection, it can cause a ragged stream, reducing the effective reach of the nozzle; at a fire hose coupling, it can cause increased friction loss.

A.26.1

The purpose of the system test is to get accurate pump discharge pressures correlating to the desired flow rate on all interior attack lines used on the fire apparatus. Friction loss in hose varies with the brand and age of the hose, and it is only through a system test that the pump operator will accurately know what pressures are needed at the pump to get a proper flow from the nozzle.

A.26.1.3

It does not matter where the flow gauge is placed in the hose line being tested. If it is placed on the apparatus discharge, the pump operator can read the flow and the engine discharge pump pressure at the same time.

Annex B Specifying and Procuring Fire Hose

This annex is not a part of the requirements of this NFPA document but is included for informational purposes only.

B.1 General.

Fire hose is one of the most important tools that a firefighter uses. Fire hose must provide many years of reliable service along with the couplings, nozzles, adapters, and appliances that are used with fire hose. The purchase of new fire hose involves an important investment and should be treated as such. A purchase should be made only after a detailed study of the fire department's needs, taking into consideration other equipment the department uses or plans to acquire.

B.2 Determining the Qualities and Characteristics Needed for Fire Hose.

B.2.1

The first consideration in planning the purchase of fire hose is determining the characteristics desired of the new hose. Desired characteristics should be identified and then prioritized *(for a guide, see Figure B.2.1)*. Those characteristics can include the following:

(1) *Size/diameter.* The hose size or diameter will affect the flow capabilities of the hose. If the hose is going to be used for handheld hose lines, it is important to match the size of the hose with the flow of the nozzle. A nozzle that flows 200 gpm attached to a hose line that has friction loss of 60 psi/100 ft when flowing 200 gpm is not a good match.

(2) *Length.* In what lengths is the hose to be coupled? Hose is typically coupled in either 50 ft (15 m) or 100 ft (30 m) lengths but can be coupled in any length, which will affect the number of couplings required.

(3) *Application.* How is the hose to be used? For example, a fire department might want attack hose to be used in a standpipe pack to have characteristics different from those of attack hose that will be carried preconnected on a pumper. Large-diameter hose that will be supplying a pumper from a hydrant is different from large-diameter hose that will be supplying elevated stream fire apparatus or a standpipe system in a building.

(4) *Color.* Hose is available in a variety of jacket colors. Fire departments often like to color code hose to specific applications. If specific colors are desired, the purchaser needs to specify the amount of hose to be purchased in each color.

(5) *Construction.* Fire hoses use a variety of natural and synthetic fabrics and elastomers in their construction. These materials allow the hoses to be stored wet without rotting and to resist the damaging effects of exposure to sunlight and chemicals. Modern hoses are also lighter weight than older designs, which has helped reduce the physical strain on firefighters. The synthetic fibers provide additional strength and better resistance to abrasion, and the fiber yarns can be dyed various colors or left natural. Coatings and liners include synthetic rubbers such as styrene butadiene, ethylene propylene, chloroprene, polyurethane, and nitrile butadiene. These compounds provide various degrees of resistance to chemicals, temperature, ozone, ultraviolet (UV) radiation, mold, mildew, and abrasion. Different coatings and liners are chosen for specific applications.

(6) *Packability.* Fire apparatus has limited space for the storage of fire hose, whether that hose is stored preconnected to the pump for initial attack or in a hose bed where the amount needed can be deployed and the remainder left on the apparatus. Some hose is packed lying flat while other hose is packed standing on its edge. It is important to consider the space on the apparatus where the hose will be carried and how a specific type of hose will pack into that space. Does it fold tightly at the ends of the hose bed? Is it easily deployed? A hose bed with a rigid hose bed cover could limit how the hose can be packed or how much hose can be packed in the hose bed and still allow quick and easy deployment. The coupling on the fire hose can affect the packability of the hose into a given space. Hose can be purchased in longer lengths to reduce the number of couplings that must be accommodated in a given space. If preconnected hose lines are in multiples of 100 ft (30 m), consider buying 100 ft (30 m) lengths of hose rather than 50 ft (15 m) lengths.

(7) *Friction loss.* The friction loss per 100 ft (30 m) of fire hose can vary tremendously for the same diameter hose. While a fire department may want a hose with as low a friction loss as possible, other desired characteristics can affect the availability of hose with all the desired characteristics. As part of the planning, the department should look at how the hose will be used and the importance of reducing the friction loss on that application. The effects of various friction loss on the application should be taken into account when considering what is an acceptable friction loss.

(8) *Weight.* If the weight of the hose is a factor, the maximum weight per 50 ft (15 m) or 100 ft (30 m) needs to be considered. Does that weight include the couplings? Weight is especially critical in two areas. If large-diameter hose is to be carried on older fire apparatus, the gross vehicle weight rating (GVWR) of the apparatus can limit the amount of hose that can be carried. Also, if hose is to be carried by firefighters in bundles such as high-rise or standpipe packs, lighter is better as long as the hose meets the requirements for the operating pressure at which it will be used.

(9) *Kink resistance.* Layflat fire hose has a tendency to fold, or “kink,” when used at low pressures. This is common in operational use, an example being a hose dragged around a doorway. When a hose kinks, two things happen. First, the waterflow through the hose is throttled and therefore reduced. Second, at the point of kinking, a high spot is formed that leads to excessive abrasion and early failure of the hose. Fire hose should be flexible when there is no water in it to allow easy packing but resist bending to the point of kinking when charged with water.

(10) *Cost.* The amount of money budgeted is always part of the purchasing process, but other costs also should be considered, such as higher quality or longer service life relative to the long-term cost of the purchase. Spending a little more money initially can save money in the future because of a less frequent replacement schedule.

(11) *Expected service life.* The expected service life is how long the purchaser expects to be able to use the hose before its scheduled or planned replacement. Fire departments should have an established replacement schedule for fire hose. The characteristics of fire hose can change as new materials and methods of construction are introduced. The improved characteristics of newer hose could warrant replacement of existing hose on an accelerated schedule.

(12) *Warranty.* The expected service life and the warranty period are not the same. The warranty is an assurance by the manufacturer to the buyer that specific facts or conditions are true or will happen for a specified period of time; the buyer is permitted to rely on that assurance and seek some type of remedy

if it is not true or not followed. The purchaser should evaluate what the warranty covers and what it does not cover and for what periods of time.

(13) *Manufactured in accordance with NFPA standards.* At a minimum, any hose purchased should meet the edition of NFPA 1961 that is in effect at the time of purchase. However, it is important to recognize that the standard establishes minimum requirements. The purchaser should carefully review the standard and determine if requirements that go beyond the minimum are desired.

(14) *Independent third-party listing or approval.* Currently, NFPA 1961 does not require fire hose manufacturers to have an independent third-party test or to certify the test results of fire hose. However, such services are available and should be considered, particularly if the purchaser does not have a good program for checking new fire hose before it is placed in service.

(15) *Normal operating pressure.* NFPA 1961 establishes minimum service test pressures for different types of fire hose. These service test pressures are about 110 percent of the expected normal operating pressure. If the hose will be used at pressures above the minimum service test pressure, the hose should be required to have a higher service test pressure and thus a higher operating pressure.

(16) *Service test pressure.* Fire hose often has a designed service test pressure higher than the user plans to operate the hose at or service test it to. NFPA 1961 allows fire hose to be marked with a service test pressure lower than the manufacturer's design service test pressure as long as it is not below the minimum specified in the standard.

(17) *Thermal resistance.* Consider the thermal resistance of different fire hose products as reported by the manufacturer's testing results.

Figure B.2.1 Guide to Determining Qualities and Characteristics Needed for Fire Hose.

QUALITIES AND CHARACTERISTICS NEEDED FOR FIRE HOSE

Desirable Qualities and Characteristics	Order of Importance	Notes
Abrasion resistance		
Application		
Certification to NFPA standards		
Chalking		
Chemical resistance		
Cold resistance		
Color		
Component compatibility		
Construction		
Cost		
Couplings		
Ease of advancement		
Expected life until replacement		
Flexibility		
Folds		
Friction loss		
Heat resistance		
Kink resistance		
Length		
Lining and cover properties		
Normal operating pressure and service test pressure		
Ozone resistance		
Packability		
Repairability		
Size/diameter		
Third-party listing or approval		
Warranty		
Weight		

NFPA 1930

B.2.2

The second consideration in the purchase of a fire hose is the associated equipment and components. These components include new and existing couplings, nozzles, adapters, and appliances. Are all components compatible in terms of operating pressure, connection, weight limits (GVWR and carrying capacity of the apparatus), and storage space?

It is important that all components in the water delivery system are compatible and that it is understood what the limitations are. The system is only as robust as its weakest link. Many components can be connected together, but that does not mean they can all be used at the same operating pressure. Today, the fire hose may be the strongest component in the system. All components need to have an operating pressure rated at or above the needed fireground pressures to deliver their capacity.

B.3 Writing the Specifications.

B.3.1

Once the desired characteristics have been identified and prioritized, the purchaser needs to write a specification that defines the characteristics needed and the quality desired. NFPA 1961 provides the minimum technical requirements that new fire hose is expected to meet. Specifications should take into consideration the existing, proposed, and future use of the hose and the components.

B.3.2

The purchaser should also define in the specifications the warranty desired for the hose. The warranty is a written guarantee of the integrity of the hose that defines the manufacturer's responsibility within a given time period. If a second party, such as a dealer, is involved in modifying hose that is warranted by the original manufacturer, the responsibility for warranty work should be clearly understood by the original manufacturer, the second party, and the purchaser.

Annex C History of Fire Hose Coupling Thread Standardization in the United States

This annex is not a part of the requirements of this NFPA document but is included for informational purposes only.

C.1

The need for securing uniformity and interchangeability of fire hose coupling threads was demonstrated by the Boston conflagration of November 1872. The following year, standardization was proposed by the International Association of Fire Engineers (IAFE), now the International Association of Fire Chiefs (IAFC). In subsequent years, various suggested standard threads were considered. A special committee of the IAFE prepared a report adopted at its 1891 convention in which the present principal dimensions for 2½ in. fire hose coupling screw threads were suggested, but no specifications for the shape of thread were included.

Little more was done toward standardization until difficulties with nonstandard threads were encountered by fire departments called to assist at the Baltimore conflagration of 1904. The following year, the National Fire Protection Association (NFPA) actively took up the project, appointing the Committee on Standard Thread for Fire Hose Couplings. The committee developed general screw thread specifications covering the 2½ in., 3 in., 3½ in., and 4½ in. sizes, using as a basis the earlier report of the IAFE committee and working with the active cooperation of the American Water Works Association (AWWA). The principal dimensions for the 2½ in. couplings of 7½ threads per inch and 3 1⁄16 in. outside diameter of the external thread (ODM) were selected to facilitate conversion of existing couplings, the majority of which had either 7 or 8 threads per inch and 3 in. or 3⅓ in. ODM.

During the years that followed, until 1917, the committee worked diligently to secure recognition of those specifications as a “National Standard” and their adoption by cities and towns throughout the United States. Its efforts were rewarded with considerable success, and, in addition, as many as 20 organizations officially approved and adopted the standard. It was also published by the National Board of Fire Underwriters (NBFU) in 1911, the American Society of Mechanical Engineers (ASME) in 1913, the US Bureau of Standards as Circular No. 50 (1914 and 1917), and the AWWA. Between 1920 and 1923, a series of conferences was held, attended by representatives of the manufacturers of fire hose couplings, the NFBU, the National Screw Thread Commission (NSTC), and the ASME. These conferences resulted in an agreement concerning the standardization of screw thread tolerances, allowances, and methods of gauging. Efforts to bring about the general adoption of the standard throughout the country were continued. In October 1923, NBFU, NFPA, and ASME asked the American Standards Association (ASA) to approve and designate this standard as an “American Standard.” Shortly afterward, ASA assigned joint sponsorship for the project to NBFU, AWWA, and ASME. At that time, through the cooperation of a group of gauging experts, including members of NSTC, the limiting dimensions were added to the original specifications, and the standard for fire hose coupling screw threads for sizes 2½ in. and larger was approved by the ASA in May 1925.

In 1917, by mutual agreement, the field work of the NFPA committee concerned with encouraging adoption and application of the standard was taken over by the Committee on Fire Prevention and Engineering Standards of the NBFU. At the same time, NFPA organized the Committee on Small Hose Couplings to develop standards on fire hose screw threads in sizes from ½ in. to 2 in. nominal diameters. A standard covering these sizes was developed and adopted by NFPA in 1922. These smaller-size couplings had the same general characteristics of thread design as the standard couplings for 2½ in. and larger hose. The NFPA *Standard for Small Hose Coupling Screw Threads* was submitted to the ASA for approval in 1926 and is the basis for the current fire hose screw thread dimensions included in this standard.

The National Screw Thread Commission also had prepared dimensions for the screw threads of small-hose couplings ½ in. to 2 in., inclusive, which were published in 1921, 1924, and 1928 reports. The pitches and other dimensions of these threads, except for the garden hose size, varied from those proposed by the NFPA for use on fire hose, which requires a heavier thread that can be connected quickly in the field.

In January 1927, the ASME requested that the ASA authorize the organization of a sectional committee to complete the standardization of fire hose couplings and to attempt to unify and complete the dimensions of small hose couplings. A sectional committee was organized in October 1928, under the sponsorship of the ASME, to prepare specifications for screw threads for small-hose couplings ranging from ½ in. to 2 in. nominal size. Data on these smaller threads were published by ASA.

Subsequently, it was found that almost every pump manufacturer was using different threads on 4 in., 5 in., and 6 in. supply hose and fittings required on certain sizes of fire department pumping engines, so the supply hose from one pumper could not be used on another pumper at the same time. Accordingly, in 1955, NFPA adopted standards for threads on these three sizes of fire hose. In 1956, NFPA adopted dimensions for gaskets for standard fire hose couplings of all sizes from ¾ in. to 6 in. couplings, as well as data on the required gasket seat dimensions. Gaskets were felt to be an essential feature of a fire hose coupling standard because hose connections feature swivel or female fittings that must provide a tight waterway when connected to the opposing thread. NFPA also prepared a text showing the suggested application of the standard to various items of firefighting equipment because experience had shown that the wrong size of standard thread was sometimes used, limiting the effectiveness of the equipment.

In 1961, the duties of the ASA sectional committee were transferred to a newly established subcommittee of the ASA Sectional Committee on the Standardization of Pipe Threads, for which the ASME and the American Gas Association (AGA) were joint sponsors. The subcommittee was organized to deal with threads for fire hose couplings and fittings. New material from the ASA subcommittee was subsequently included in the NFPA document. A survey conducted by NFPA in 1965 showed that 65 percent of the fire departments serving US communities with populations greater than 20,000 used standard fire hose coupling screw threads on all sizes of hose. The percentage of fire departments using standard threads on each of the sizes were as follows: ¾ in. and 1 in. threads, 95 percent standard; 1½ in. threads, 84 percent standard; 2½ in. threads, 73 percent standard. The degree of standardization is believed to be considerably higher in smaller communities, many of which organized their fire departments subsequent to the adoption of the standard. Approximately half of the US states have laws supporting fire hose thread standardization.

In 1965, at its 69th annual meeting, NFPA passed a resolution to intensify its efforts to accomplish complete standardization of fire hose screw threads throughout the country by asking for assistance from all fire chiefs, fire organizations, industrial organizations, manufacturers, and governmental agencies.

NFPA, International Association of Fire Chiefs (IAFC), the International Association of Fire Fighters (IAFF), the American National Standards Institute (ANSI), American Water Works Association (AWWA), and many others have assisted on the standardization program.

Annex D Informational References

D.1 Referenced Publications.

The documents or portions thereof listed in this annex are referenced within the informational sections of this standard and are not part of the requirements of this document unless also listed in Chapter 2 for other reasons.

D.1.1 NFPA Publications.

National Fire Protection Association, 1 Batterymarch Park, Quincy, MA 02169-7471.

NFPA 70®, *National Electrical Code®,* 2023 edition.

NFPA 1006, *Standard for Technical Rescue Personnel Professional Qualifications,* 2021 edition.

NFPA 1225, *Standard for Emergency Services Communications,* 2022 edition.

NFPA 1500™, *Standard on Fire Department Occupational Safety, Health, and Wellness Program,* 2021 edition.

NFPA 1931, *Standard for Manufacturer's Design of Fire Department Ground Ladders,* 2020 edition.

NFPA 1936, *Standard on Rescue Tools,* 2020 edition.

NFPA 1961, *Standard on Fire Hose,* 2020 edition.

NFPA 1963, *Standard for Fire Hose Connections,* 2019 edition.

NFPA 1965, *Standard for Fire Hose Appliances,* 2014 edition.

NFPA 2500, *Standard for Operations and Training for Technical Search and Rescue Incidents and Life Safety Rope and Equipment for Emergency Services,* 2022 edition.

NFPA 5000®, *Building Construction and Safety Code®,* 2024 edition.

D.1.2 Other Publications.

D.1.2.1 ASTM Publications.

ASTM International, 100 Barr Harbor Drive, P.O. Box C700, West Conshohocken, PA 19428-2959.

IEEE/ASTM SI 10, *American National Standard for Metric Practice*, 2010.

D.1.2.2 IEEE Publications.

IEEE Operations Center, 445 Hoes Lane, Piscataway, NJ 08854-4141.

IEEE 802.15.1, *IEEE Standard for Telecommunications and Information Exchange Between Systems — LAN/MAN — Specific Requirements — Part 15: Wireless Medium Access Control (MAC) and Physical Layer (PHY) Specifications for Wireless Personal Area Networks (WPANs),* 2002.

D.1.2.3 ISO Publications.

International Organization for Standardization, ISO Central Secretariat, BIBC II, Chemin de Blandonnet 8, CP 401, 1214 Vernier, Geneva, Switzerland.

ISO 9001, *Quality management systems — Requirements*, 2008.

ISO 9001, *Quality management systems — Requirements*, 2015.

D.1.2.4 JEDEC Publications.

Joint Electron Device Engineering Council, 3103 North 10th Street, Suite 240–S, Arlington, VA 22201.

JEP131A, *Potential Failure Mode and Effects Analysis (FMEA)*, 2005.

D.1.2.5 TIA Publications.

Telecommunications Industry Association, 1310 North Courthouse Road, Suite 890, Arlington, VA 22201.

ANSI/TIA-4950-A, *Requirements for Battery-Powered, Portable Land Mobile Radio Applications in Class I, II, and III, Division 1, Hazardous (Classified) Locations*, 2014.

ANSI/TIA-4950-B, *Requirements for Battery-Powered, Portable Land Mobile Radio Applications in Class I, II, and III, Division 1, Hazardous (Classified) Locations*, 2020.

D.1.2.6 UL Publications.

Underwriters Laboratories Inc., 333 Pfingsten Road, Northbrook, IL 60062-2096.

UL 92, *Fire Extinguisher, Booster, and Noncollapsible Standpipe Hose and Hose Assemblies*, , 2020.

ANSI/UL 913, *Intrinsically Safe Apparatus and Associated Apparatus for Use in Class I, II, II, Division 1, Hazardous (Classified) Locations*, 6th edition, 2002.

UL 1642, *Lithium Batteries*, 2012, revised 2015.

UL 2054, *Household and Commercial Batteries*, 2004, revised 2011.

ANSI/UL 121201, *Nonincendive Electrical Equipment for Use in Class I and II, Division 2 and Class III, Divisions 1 and 2 Hazardous (Classified) Locations*, 9th edition, 2017.

D.1.2.7 USFA Publications.

US Fire Administration, 16825 South Seton Ave., Emmitsburg, MD 21727.

Voice Radio Communications Guide for the Fire Service, June 2016.

D.1.2.8 Other Publications.

Purington, R. G., *Fire Fighting Hydraulics*, McGraw-Hill, New York, 1974, pp. 371–373.

D.2 Informational References.

The following documents or portions thereof are listed here as informational resources only. They are not a part of the requirements of this document.

NFPA 1500™, *Standard on Fire Department Occupational Safety, Health, and Wellness Program,* 2020 edition.

D.2.1 CENELEC Publications.

CENELEC, European Committee for Electrotechnical Standardization, CEN-CENELEC Management Centre, Avenue Rue de la Science 23, B - 1040 Brussels, Belgium.

EN 13731, *Lifting bag systems for fire and rescue service use — Safety and performance requirements*, 2007 edition.

D.3 References for Extracts in Informational Sections. (Reserved)

Public Comment No. 33-NFPA 1930-2023 [Section No. 2.3.6]

2.3.6 ITU Publications.

International Telecommunication Union (ITU), Place des Nations, 1211 Geneva 20, Switzerland.

ITU-T P.56, *Objective Measurement of Active Speech Level*, 2011

ITU-T P. 863, *Perceptual Objective Listening Quality Assessment*, 2018.

Statement of Problem and Substantiation for Public Comment

This PC is being submitted on behalf of the task group created during the First Draft Meeting consisting of Motorola, L3Harris, JVCKenwood, SEI, and Intertek. Another PC submitted by this task group adds a reference to ITU-T P.56 in section 13.2

Related Public Comments for This Document

Related Comment	Relationship
Public Comment No. 30-NFPA 1930-2023 [New Section after 13.2.1.12]	

Related Item

- First Draft Public Inputs 38, 46, 57, 59, 60, 61, 78, 81, 84, 90

Submitter Information Verification

Submitter Full Name: Benjamin Hanna
Organization: Safety Equipment Institute (SE
Street Address:
City:
State:
Zip:
Submittal Date: Thu Dec 07 13:39:52 EST 2023
Committee: FAE-ELS

Committee Statement

Committee Action: Rejected but see related SR
Resolution: SR-39-NFPA 1930-2024
Statement: Adding a reference to ITU-T P.56 based on changes in section 13.2.

Public Comment No. 1-NFPA 1930-2023 [Section No. 2.3.8]

2.3.8 TIA Publications.

Telecommunications Industry Association, 1310 North Courthouse Road, Suite 890, Arlington, VA 22201.

TIA-102.AABD, *Project 25 Trunking Procedures*, 2014.

TIA-102.CAAA-F, *Project 25 Digital C4FM/CQPSK Transceiver Measurement Methods*, 2021.

TIA-102.CAAB-E, *Land Mobile Radio Transceiver Performance Recommendations, Digital Radio Technology, C4FM/CQPSK Modulation*, 2021.

TIA-603-E, *Land Mobile FM or PM — Communications Equipment — Measurement and Performance Standards*, 2016.

TIA-4950-B, *Requirements for Battery-Powered, Portable Land Mobile Radio Applications in Class I, II, III, Division I, Hazardous (Classified) Locations* , 2020.

TIA-4950-A, *Requirements for Battery-Powered, Portable Land Mobile Radio Applications in Class I, II, III, Division I, Hazardous (Classified) Locations* , 2014.

TIA- 5045, *Numeric Identifier for Conventional Analog Operation,* 2017.

Statement of Problem and Substantiation for Public Comment

RF devices rely on both editions of these TIA standards as two of the HazLoc standards for intrinsic safety. Therefore, they need to be included as Normative references here and in the body of the standard, not just in an Informative Annex. Further, this addition aligns with the comparable text in NFPA 1970.

Related Item

• First Revision No. 75-NFPA 1930-2023 [Section No. 2.3.8]

Submitter Information Verification

Submitter Full Name: Paul Kelly
Organization: UL Solutions
Street Address:
City:
State:
Zip:
Submittal Date: Tue Nov 28 20:20:07 EST 2023
Committee: FAE-ELS

Committee Statement

Committee Action: Rejected but see related SR
Resolution: SR-16-NFPA 1930-2024
Statement: RF devices rely on both editions of these TIA standards as two of the HazLoc standards for intrinsic safety. Therefore, they need to be included as Normative

references here and in the body of the standard, not just in an Informative Annex.

Public Comment No. 2-NFPA 1930-2023 [Section No. 2.3.9]

2.3.9 UL Publications.

Underwriters Laboratories Inc., 333 Pfingsten Road, Northbrook, IL 60062-2096.

UL 1642, *Lithium Batteries*, 2012, revised 2015.

UL 2054, *Household and Commercial Batteries*, 2004, revised 2011.

~~ANSI/UL~~
UL 913, *Intrinsically Safe Apparatus and Associated Apparatus for Use in Class I, II, III, Division 1, Hazardous (Classified) Locations*, Sixth Edition, 2002.

UL 121201, *Nonincendive Electrical Equipment for Use in Class I and II, Division 2 and Class III, Divisions 1 and 2 Hazardous (Classified) Locations* ,

~~9th edition~~
Ninth Edition , 2017.

Statement of Problem and Substantiation for Public Comment

RF devices rely on both UL 913 Sixth Edition as one of the HazLoc standards for intrinsic safety, and on UL 121201 Niinth Edition as the HazLoc standard for nonncendive. Therefore, they need to be included as Normative references here and in the body of the standard, not just in an Informative Annex. Further, this addition aligns with the comparable text in NFPA 1970.

Related Item

• First Revision No. 61-NFPA 1930-2023 [Section No. 2.3.9]

Submitter Information Verification

Submitter Full Name: Paul Kelly
Organization: UL Solutions
Street Address:
City:
State:
Zip:
Submittal Date: Tue Nov 28 20:31:40 EST 2023
Committee: FAE-ELS

Committee Statement

Committee Action: Rejected but see related SR
Resolution: SR-14-NFPA 1930-2024
Statement: RF devices, thermal imagers, and their accessories rely on both UL 913 Sixth Edition as one of the HazLoc standards for intrinsic safety, and on UL 121201 Ninth Edition as the HazLoc standard for nonincendive. Therefore, they need to be included as Normative references here and in the body of the standard, not just in an Informative Annex. Further, this addition aligns with the comparable text in NFPA 1970.

Public Comment No. 45-NFPA 1930-2023 [New Section after 3.2]

Default/By Default-

The standard value or setting unless changed by the AHJ or the user.

Statement of Problem and Substantiation for Public Comment

The tern "default" is used in several places in the standard. Without a definition the intent of the Committee is not clear. This definition clarifies that default settings may be modified by the AHJ or the user.

Related Item

- 3.3

Submitter Information Verification

Submitter Full Name: James Connolly
Organization: The Connolly Group Llc
Street Address:
City:
State:
Zip:
Submittal Date: Thu Dec 21 13:30:16 EST 2023
Committee: FAE-ELS

Committee Statement

Committee Action: Rejected

Resolution: The Committee determined the definition is unnecessary and will make necessary revisions to other sections to achieve the objective of clarifying the use of the word default within the standard.

Public Comment No. 3-NFPA 1930-2023 [Section No. 3.3.57 [Excluding any Sub-Sections]]

A location where fire or explosion hazards might exist due to flammable or combustible ~~material.~~ material (e.g., flammable gases, flammable liquid-produced vapors, combustible liquid-produced vapors, combustible dusts, or ignitible fibers/flyings).

Statement of Problem and Substantiation for Public Comment

This additional clause provides immediately apparent clarifying details regarding the areas of concern and more accurately reflects the National Electrical Code. Further, this addition aligns with the comparable text in NFPA 1970. With this alignment, the last sentence under A.3.3.57 can be deleted.

Related Item

- First Revision No. 68-NFPA 1930-2023 [Sections 3.3.55, 3.3.56]

Submitter Information Verification

Submitter Full Name: Paul Kelly
Organization: UL Solutions
Street Address:
City:
State:
Zip:
Submittal Date: Wed Nov 29 07:30:35 EST 2023
Committee: FAE-ELS

Committee Statement

Committee Action: Rejected but see related SR
Resolution: SR-79-NFPA 1930-2024
Statement: This additional clause provides immediately apparent clarifying details regarding the areas of concern and more accurately reflects the National Electrical Code. Further, this addition aligns with the comparable text in NFPA 1970. With this alignment, the last sentence under A.3.3.57 can be deleted.

Public Comment No. 19-NFPA 1930-2023 [Section No. 3.3.57.2.10]

3.3.57.2.10* Nonincendive Circuit.

A circuit, other than nonincendive field wiring, in which any arc or thermal effect produced under normal operating conditions is not capable of igniting a specified flammable or combustible material in air. The circuit is evaluated under prescribed test conditions.

Statement of Problem and Substantiation for Public Comment

This additional clause provides immediately apparent clarifying details regarding the protection technique and more accurately reflects the National Electrical Code. Further, this addition aligns NFPA 1930 with the comparable text in NFPA 1970. With this alignment, A.3.3.57.2.10 can be deleted, further aligning NFPA 1930 with NFPA 1970.

Related Item

• First Revision No. 68-NFPA 1930-2023 [Sections 3.3.55, 3.3.56]

Submitter Information Verification

Submitter Full Name: Paul Kelly
Organization: UL Solutions
Street Address:
City:
State:
Zip:
Submittal Date: Tue Dec 05 18:58:21 EST 2023
Committee: FAE-ELS

Committee Statement

Committee Action: Rejected

Resolution: This additional clause provides immediately apparent clarifying details regarding the protection technique and more accurately reflects the National Electrical Code. Further, this addition aligns NFPA 1930 with the comparable text in NFPA 1970. With this alignment, A.3.3.57.2.10 can be deleted, further aligning NFPA 1930 with NFPA 1970.

Public Comment No. 4-NFPA 1930-2023 [New Section after 5.2.7]

5.2.8

Equipment certified for use in hazardous locations shall be provided with at least the following information in user instructions or training materials:

(1) For thermal imagers and thermal imager accessories that are certified as nonincendive equipment, electrically interconnected types, the following:

(2) Identification as nonincendive equipment, electrically interconnected types

(3) Indication of the ability to interconnect with any other thermal imager and thermal imager accessories also certified and identified as nonincendive equipment, electrically interconnected types, in accordance with this standard

(4) For thermal imagers that are part of a nonincendive system, indication of the thermal imager accessories that comprise the nonincendive system in accordance with this standard

(5) For thermal imagers that are part of an intrinsically safe system, indication of the thermal imager accessories that comprise the intrinsically safe system in accordance with this standard

Statement of Problem and Substantiation for Public Comment

This user information is critical to the safe use of the equipment within the scope of the certification. Further, this addition aligns NFPA 1930 with the comparable text in NFPA 1970.

Related Item

• First Revision No. 63-NFPA 1930-2023 [Section No. 5.2.8]

Submitter Information Verification

Submitter Full Name: Paul Kelly
Organization: UL Solutions
Street Address:
City:
State:
Zip:
Submittal Date: Wed Nov 29 07:48:58 EST 2023
Committee: FAE-ELS

Committee Statement

Committee Action: Rejected but see related SR
Resolution: SR-15-NFPA 1930-2024
Statement: This user information is critical to the safe use of the equipment within the scope of the certification. Further, this addition aligns NFPA 1930 with the comparable text in NFPA 1970.

Public Comment No. 35-NFPA 1930-2023 [New Section after 6.1.6]

6.1.6.1

Display devices consisting of more than 76,800 display pixels shall use at least 76,800 display pixels for the video output.

Statement of Problem and Substantiation for Public Comment

Clarifies that the thermal image needs to be displayed using at least the minimum number of pixels that are required for the sensor. This prevents the thermal image from being scaled down if screen space is used for objects other than the thermal image.

Related Public Comments for This Document

Related Comment	Relationship
Public Comment No. 36-NFPA 1930-2023 [New Section after 6.6.3.1.2]	
Public Comment No. 37-NFPA 1930-2023 [New Section after 6.6.3.3]	

Related Item

- Clarifies requirement of 6.1.6

Submitter Information Verification

Submitter Full Name: Benjamin Hanna
Organization: Safety Equipment Institute (SE
Street Address:
City:
State:
Zip:
Submittal Date: Wed Dec 13 09:22:05 EST 2023
Committee: FAE-ELS

Committee Statement

Committee Action: Rejected but see related SR
Resolution: SR-1-NFPA 1930-2024
Statement: Clarifies that the thermal image needs to be displayed using at least the minimum number of pixels that are required for the sensor. This prevents the thermal image from being scaled down if screen space is used for objects other than the thermal image.

Public Comment No. 36-NFPA 1930-2023 [New Section after 6.6.3.1.2]

6.6.3.1.3

Standard icons or symbols in the Additional Information Area that do not overlay the thermal image, shall contrast the background they are displayed on.

Statement of Problem and Substantiation for Public Comment

Clarifies that when the additional information symbols are not displayed on top of the thermal image, they need to contrast the background to ensure they can be seen in different environments.

Related Public Comments for This Document

Related Comment	Relationship
Public Comment No. 35-NFPA 1930-2023 [New Section after 6.1.6]	

Related Item

- Clarifies section 6.6.3.1 requirement

Submitter Information Verification

Submitter Full Name: Benjamin Hanna
Organization: Safety Equipment Institute (SE
Street Address:
City:
State:
Zip:
Submittal Date: Wed Dec 13 09:32:18 EST 2023
Committee: FAE-ELS

Committee Statement

Committee Action: Rejected but see related SR
Resolution: SR-2-NFPA 1930-2024
Statement: Clarifies that when the additional information symbols are not displayed on top of the thermal image, they need to contrast the background to ensure they can be seen in different environments.

Public Comment No. 37-NFPA 1930-2023 [New Section after 6.6.3.3]

6.6.3.3.1

Temperature sensing indicators and heat color reference bar(s) that do not overlay the thermal image, shall contrast the background they are displayed on.

Statement of Problem and Substantiation for Public Comment

Clarifies that when the temperature sensing indicators and heat color reference bar are not displayed on top of the thermal image, they need to contrast the background to ensure they can be seen in different environments.

Related Public Comments for This Document

Related Comment	Relationship
Public Comment No. 35-NFPA 1930-2023 [New Section after 6.1.6]	

Related Item

- Clarifies requirement of 6.6.3.3

Submitter Information Verification

Submitter Full Name: Benjamin Hanna
Organization: Safety Equipment Institute (SE
Street Address:
City:
State:
Zip:
Submittal Date: Wed Dec 13 09:33:58 EST 2023
Committee: FAE-ELS

Committee Statement

Committee Action: Rejected but see related SR
Resolution: SR-3-NFPA 1930-2024
Statement: Clarifies that when the temperature sensing indicators and heat color reference bar are not displayed on top of the thermal image, they need to contrast the background to ensure they can be seen in different environments.

Public Comment No. 5-NFPA 1930-2023 [Section No. 6.7.2.1]

6.7.2.1* General.

Thermal imagers and thermal imager accessories shall, at a minimum, be suitable for use in Class I, Division 2, Groups C and D; Class II, Division 2, Groups F and G; and Class III, Divisions 1 and 2 hazardous (classified) locations, ~~and~~ with a temperature class within the range of T3 through T6 inclusive in accordance with UL 121201, *Nonincendive Electrical Equipment for Use in Class I and II, Division 2 and Class III, Divisions 1 and 2 Hazardous (Classified) Locations,* Ninth Edition, 2017 .

Statement of Problem and Substantiation for Public Comment

Thermal imagers rely on UL 121201 Niinth Edition as the HazLoc standard for nonncendive. Therefore, it needs to be included as a Normative reference here, not just in an Informative Annex. Further, this addition aligns with the comparable text in NFPA 1970.

Related Item

• First Revision No. 65-NFPA 1930-2023 [New Section after 6.6]

Submitter Information Verification

Submitter Full Name: Paul Kelly
Organization: UL Solutions
Street Address:
City:
State:
Zip:
Submittal Date: Wed Nov 29 08:30:47 EST 2023
Committee: FAE-ELS

Committee Statement

Committee Action: Rejected but see related SR
Resolution: SR-5-NFPA 1930-2024
Statement: Thermal imagers rely on UL 121201 Ninth Edition as the HazLoc standard for nonincendive. Therefore, it needs to be included as a Normative reference here, not just in an Informative Annex. Further, this addition aligns with the comparable text in NFPA 1970.

Public Comment No. 6-NFPA 1930-2023 [Section No. 6.7.2.2.2]

6.7.2.2.2

The electrical parameters for this interconnection shall be in accordance with Table 6.7.2.2.2.

Table 6.7.2.2.2 Electrical Parameters for Interconnection of Nonincendive Equipment, Electrically Interconnected Types

RFDC as source	Required relationship	RFDC as sink
Uo ≤ 8 V	Uo ≤ Ui	Ui ≥10 V- ~~max~~
Io ≤ 500 mA	Io ≤ Ii	Ii ≥ 1 A- ~~max~~
Co ≥ 69 µF	Co ≥ Ci + Ccable*	Ci ≤ 68 µF- ~~max~~
Lo ≥ 320 µH	Lo ≥ Li + Lcable*	Li ≤ 315 µH- ~~max~~

*Assumption for cable capacitance (Ccable) and cable inductance (Lcable): 200 pF/m and 1 µH/m respectively.

Statement of Problem and Substantiation for Public Comment

The "max" is unnecessary and adds no value. Further, this revision aligns with the comparable text in NFPA 1970.

Related Item

• First Revision No. 65-NFPA 1930-2023 [New Section after 6.6]

Submitter Information Verification

Submitter Full Name: Paul Kelly
Organization: UL Solutions
Street Address:
City:
State:
Zip:
Submittal Date: Wed Nov 29 09:15:37 EST 2023
Committee: FAE-ELS

Committee Statement

Committee Action: Rejected but see related SR
Resolution: SR-7-NFPA 1930-2024
Statement: The "max" is unnecessary and adds no value. Further, this revision aligns with the comparable text in NFPA 1970.

Public Comment No. 7-NFPA 1930-2023 [Section No. 6.7.2.3]

6.7.2.3– Interconnection of Nonincendive Systems.

Thermal imagers that are certified as part of a nonincendive system shall only be interconnected with thermal imager accessories also certified as part of the same nonincendive system.

Statement of Problem and Substantiation for Public Comment

This additional wording provides immediately apparent clarifying details regarding the area of concern. Further, this addition aligns with the comparable text in NFPA 1970.

Related Item

• First Revision No. 65-NFPA 1930-2023 [New Section after 6.6]

Submitter Information Verification

Submitter Full Name: Paul Kelly
Organization: UL Solutions
Street Address:
City:
State:
Zip:
Submittal Date: Wed Nov 29 09:22:41 EST 2023
Committee: FAE-ELS

Committee Statement

Committee Action: Rejected but see related SR
Resolution: SR-8-NFPA 1930-2024
Statement: This additional wording provides immediately apparent clarifying details regarding the area of concern. Further, this addition aligns with the comparable text in NFPA 1970.

Public Comment No. 8-NFPA 1930-2023 [Section No. 6.7.3.1]

6.7.3.1*

Thermal imagers and thermal imager accessories shall be permitted to be certified at a minimum for use in Class I, Division 1, Groups C and D; Class II, Division 1, Groups E, F, and G; Class III, Division 1 and 2 hazardous (classified) locations, ~~and~~ with a temperature class within the range of T3 through T6 inclusive in accordance UL 913, *Intrinsically Safe Apparatus and Associated Apparatus for Use in Class I, II, and III, Division 1 Hazardous (Classified) Lo* cations, Sixth Edition, 2002 .

Statement of Problem and Substantiation for Public Comment

Thermal imagers rely on UL 913 Sixth Edition as the HazLoc standard for intrinsic safety. Therefore, it needs to be included as a Normative reference here, not just in an Informative Annex. Further, this addition aligns with the comparable text in NFPA 1970.

Related Item

• First Revision No. 65-NFPA 1930-2023 [New Section after 6.6]

Submitter Information Verification

Submitter Full Name: Paul Kelly
Organization: UL Solutions
Street Address:
City:
State:
Zip:
Submittal Date: Wed Nov 29 09:43:50 EST 2023
Committee: FAE-ELS

Committee Statement

Committee Action: Rejected but see related SR
Resolution: SR-10-NFPA 1930-2024
Statement: Thermal imagers rely on UL 913 Sixth Edition as the HazLoc standard for intrinsic safety. Therefore, it needs to be included as a Normative reference here, not just in an Informative Annex. Further, this addition aligns with the comparable text in NFPA 1970. Text added to 6.7.3.1 and 6.7.1, therefore this information was removed from the annex.

Public Comment No. 9-NFPA 1930-2023 [Section No. 6.7.3.2]

6.7.3.2– Interconnection of Intrinsically Safe Systems.

Thermal imagers that are certified as part of an intrinsically safe system shall only be interconnected with thermal imager accessories also certified as part of the same intrinsically safe system.

Statement of Problem and Substantiation for Public Comment

This additional wording provides immediately apparent clarifying details regarding the area of concern. Further, this addition aligns with the comparable text in NFPA 1970.

Related Item

• First Revision No. 65-NFPA 1930-2023 [New Section after 6.6]

Submitter Information Verification

Submitter Full Name: Paul Kelly
Organization: UL Solutions
Street Address:
City:
State:
Zip:
Submittal Date: Wed Nov 29 09:50:39 EST 2023
Committee: FAE-ELS

Committee Statement

Committee Action: Rejected but see related SR
Resolution: SR-9-NFPA 1930-2024
Statement: This additional wording provides immediately apparent clarifying details regarding the area of concern. Further, this addition aligns with the comparable text in NFPA 1970.

Public Comment No. 48-NFPA 1930-2024 [New Section after 8.1.4.7.3]

Nikon Z7II Settings

8.1.4.7.4 All Nikon Z7 II settings other than those specified below shall remain set at the factory default selections. The specific modifications to the Nikon Z7 II settings shall be as follows:

(1) Exterior (button and switch) settings

(a) Right of View Finder – Photo/Movie Selector shall be set to Photography mode (top selection/camera illustration)

(b) Top left dial – Mode Dial; Hold down center release button and set to “M” (manual)

(c) Top right scroll wheel – Adjust to change shutter speed.

(d) Top right exposure button (+/-) illustration – Holding this button down and using the right side scroll wheel allows the Exposure setting to be adjusted. Adjust this setting as necessary in conjunction with shutter speed per Section (4)

(e) ISO button – Holding this button down and using the right side scroll wheel allows the ISO setting to be adjusted and override the menu setting, value shall be set to 200; Holding down ISO button and using front scroll wheel allows Auto ISO to be turned on, this setting shall remain off

(e) Camera shall be turned on.

(2) Photo Shooting Menu

(a) Reset shooting menu — No

(b) File naming — (N/A) (or DSC default)

(c) Primary Slot Selection – SD Card Slot

(d) Choose Image Area – FX (36x24)

(e) Image quality — NEF (RAW)

(f) Image Size – RAW L

(g) NEF RAW recording — Type — Off; NEF (RAW) bitdepth — 14 Bit

(h) ISO sensitivity settings – 200; Auto ISO Sensitivity Control – Off

(i) White balance — Direct sunlight

(j) Set picture control — Neutral

(k) Color space — sRGB

(l) Active D-lighting — Off

(m) Long exposure NR – Off

(n) High ISO NR – Off

(o) Vignette control — Normal

(p) Diffraction compensation – On

(q) Portrait impression balance – Off

(r) Metering – Matrix

(s) Focus mode – AF-S

(t) AF area mode – N/A

(u) Vibration reduction – Off

(v) Auto bracketing – AE/Flash

(w) Multiple exposure — Off

(x) HDR (high dynamic range) – Off

(y) Interval timer shooting — Off

(z) Focus shift shooting – Off

(1) Custom Setting Menu

(a) Autofocus

1. AF-C priority selection — Release

2. AF-S priority selection — Focus

3. Focus tracking with lock-on – 5

4. Focus points used – All

5. Store points by orientation – No

6. AF activation — Shutter/AF-On

7. Limit AF-area mode selection – Select All

8. Focus point wraparound — No wrap

9. Focus point options – Manual focus mode – on; Dynamic area AF assist – on

10. Low light AF – Off

11. Built in AF assist illuminator – On

(1) Metering/Exposure

1. EV steps for exposure cntrl – 1/3

2. Easy exposure compensation – Off

3. Center weighted area – Average

4. Fine-tune optimal exposure – No, don't continue

(c) Timers/AE Lock

1. Shutter release button/AE-L — Off

2. Self-timer delay — 10 sec; Number of shots – 1; Interval between shots – .5s

3. Power off delay – Playback – 20s; Menus – 1m; Image Review – 4s; Standby timer – 30s

(d) Shooting/Display

1. CL mode shooting speed – 5fps

2. Max continuous release — 130

3. Sync. Release mode options – Sync

4. Exposure delay mode – Off

5. Shutter Type – Auto

6. Extended shutter speeds (M) – Off

7. Limit selectable image area – Select All

8. File number sequence — On

9. Apply settings to live view – On

10. Warm Display Colors – Off

11. Image frame – Off

12. Framing grid display – Off

13. Focus peaking – Off

14. View all in continuous mode – On

(e) Bracketing/Flash

1. Flash sync speed — 1/200

2. Flash shutter speed — 1/60

3. Exposure comp for flash – Entire frame

4. Auto flash ISO sensitivity control – Subject and Background

5. Modeling flash — On

6. Auto bracketing (mode M) — Flash/speed

7. Bracketing order — MTR > under > over

(f) Controls

1. Customize " *i* " menu – Default

2. Custom Controls – Default

3. OK Button – Default

4. Shutter spd and aperture lock - Off

5. Customize command dials — Reverse rotation — No; Change main/sub — Off; Aperture setting — Sub-command dial; Menus and playback — Off

6. Release button to use dial – No

7. Reverse indicators — +,,,,,,|,,,,,, - (Positive left, Negative right — For exposure compensation); This is the brightness sensor

8. Reverse ring for focus – Off

9. Focus ring rotation range – N/A

10. Switch focus/control ring roles – Off

11. Assign MB-11 buttons – Default

(1) The manual mode settings and calibration procedure shall be as follows:

(a) Turn Nikon on.

(b) Turn thermal imager on.

(c) Select "Manual" for the camera exposure mode.

(d) Thermal imager facing spatial resolution target as specified in 8.1.4.3.

(e) Use front scroll wheel to adjust aperture setting on display to "16" for f/16.

(f) EV value set to the center (Hold down the +/- button next to the trigger release and adjust using the rear scroll wheel.).

(g) Adjust the shutter speed with the rear scroll wheel such that the brightness sensor is in the middle ± 1 dot (1⁄3 of a tick) — this is one click with the scroll wheel.

(h) The refresh rate of the display of the thermal imager shall be provided by the manufacturer.

(i) The shutter speed shall be at least twice the refresh rate of the thermal imager and less than 3 seconds. If this cannot be met with f/16 aperture, adjust the aperture to the closest value to f/16 so that the conditions can be met.

(j) Use ViewNX or ViewNX 2 to determine if there are areas within the regions of interest that either have lost highlights or lost shadows. Lost highlights represent areas of overexposure, and lost shadows represent areas of underexposure. In the event that areas within the region of interest are overexposed or underexposed, adjust the EV button toward the negative or positive, respectively, to make the image darker or lighter. Once the EV value is changed, change the shutter speed accordingly to align the brightness sensor to center again. The EV compensation value shall be as close to 0 as possible.

Additional Proposed Changes

File Name	Description	Approved
Nikon_Z7_II_Settings_-_NFPA_1930.docx		

Statement of Problem and Substantiation for Public Comment

The revision of NFPA 1801/1930 to allow a general "visible spectrum camera," instead of solely the Nikon D3, means other cameras can be used and adapted to the growing needs of Thermal Imager testing. One such camera, the Nikon Z7II, is slated to be used alongside the Nikon D3 moving forward. The use of this camera warrants the addition of settings to use with it, ensuring the repeatability of future testing and results. This also follows suit with Section 8.1.4.7.3 calling out the current Nikon D3's settings, for the same purpose.

Related Item

• Revision of specifying "Nikon D3" to "visible spectrum camera"

Submitter Information Verification

Submitter Full Name: Stone Tanner
Organization: Intertek
Street Address:
City:
State:
Zip:
Submittal Date: Wed Jan 03 15:26:31 EST 2024
Committee: FAE-ELS

Committee Statement

Committee Action: Rejected but see related SR
Resolution: SR-23-NFPA 1930-2024
Statement: The revision of NFPA 1930 to allow a general "visible spectrum camera," instead of solely the Nikon D3, means other cameras can be used and adapted to the growing needs of Thermal Imager testing. One such camera, the Nikon Z7II, is slated to be used alongside the Nikon D3 moving forward. The use of this camera warrants the addition of settings to use with it, ensuring the repeatability of future testing and results. This also follows suit with Section 8.1.4.7.3 calling out the current Nikon D3's settings, for the same purpose.

Public Comment No. 10-NFPA 1930-2023 [New Section after 10.2.5]

10.2.6

Equipment certified for use in hazardous locations shall be provided with at least the following information in user instructions or training materials:

(1) For RF devices and RSMs that are certified as nonincendive equipment, electrically interconnected types, the following:

(2) Identification as nonincendive equipment, electrically interconnected types

(3) Indication of the ability to interconnect with any other RF device and RSMs also certified and identified as nonincendive equipment, electrically interconnected types, in accordance with this standard

(4) For RF devices that are part of a nonincendive system, indication of the RSMs that comprise the nonincendive system in accordance with this standard.

(5) For RF devices that are part of an intrinsically safe system, indication of the RSMs that comprise the intrinsically safe system in accordance with this standard.

Statement of Problem and Substantiation for Public Comment

This user information is critical to the safe use of the equipment within the scope of the certification. Further, this addition aligns NFPA 1930 with the comparable text in NFPA 1970.

Related Item

• First Revision No. 67-NFPA 1930-2023 [Section No. 11.22]

Submitter Information Verification

Submitter Full Name: Paul Kelly
Organization: UL Solutions
Street Address:
City:
State:
Zip:
Submittal Date: Wed Nov 29 09:55:16 EST 2023
Committee: FAE-ELS

Committee Statement

Committee Action: Rejected but see related SR
Resolution: SR-17-NFPA 1930-2024
Statement: This user information is critical to the safe use of the equipment within the scope of the certification. Further, this addition aligns NFPA 1930 with the comparable text in NFPA 1970.

Public Comment No. 43-NFPA 1930-2023 [Section No. 11.2.1.2]

11.2.1.2

The minimum volume of the RF device in the hazard zone mode shall be ~~24 dB,~~ configurable by the AHJ, but not more than 53 dB, +0/−6 dB, below the sound pressure level (SPL) as specified in 11.4.2.

Statement of Problem and Substantiation for Public Comment

While there are valid reasons to want radios to be loud enough to overcome ambient noise, there is no proof that louder is safer. In fact just being louder can negatively influence firefighter safety. Similar to thermal performance requirements for protective clothing or vehicle lighting levels, there are many times that more is not necessarily better. There are many circumstances even while operating on a hazard zone channel (e.g., EMS personnel, incident command, rehab, hazmat personnel in Level A suits...) where the user should be able to lower their volume level below the current required volume levels. The required minimum volume level of an individual radio is approaching the noise level of a vacuum cleaner. Several radios operating in close proximity is even louder which is distracting and interferes with other verbal communication. Set the requirement at a much lower level or allow the AHJ to set the minimum hazard zone volume level based on their unique circumstances and radio usage. Making all radios operate with very high volume levels on hazard zone channels is a significant disincentive for agencies to purchase and deploy NFPA compliant radios which should be the ultimate goal of the committee.

Related Item

• 11.2.1.2

Submitter Information Verification

Submitter Full Name: James Connolly
Organization: The Connolly Group Llc
Street Address:
City:
State:
Zip:
Submittal Date: Thu Dec 21 13:20:15 EST 2023
Committee: FAE-ELS

Committee Statement

Committee Action: Rejected but see related SR

Resolution: SR-31-NFPA 1930-2024

Statement: The minimum volume level has been adjusted to help alleviate identified audio issues and gives AHJs more flexibility. Also, the ability to selectively toggle hazard zone mode, by switch or channel, will improve the experience of agencies with a limited number of tactical channels and reduce nuisance volume levels when powering up the radio for use in nonhazard zones.

Public Comment No. 42-NFPA 1930-2023 [Section No. 11.2.2]

11.2.2

All RF devices shall have the capability to enable the nonhazard zone mode via programmable switch activation, long press of a button, voice command, or by being preprogrammed to a channel talkgroup or talk path.

Statement of Problem and Substantiation for Public Comment

The proposed additional language allows other means to change to the non-hazard zone mode (e.g., long button press, voice command). Limiting the ability to enable nonhazard zone mode to a programmable switch activation requires one of the two available switches to be dedicated to this function. This eliminates other potential important safety related functions for these switches such as locking side buttons or screens that can be accidentally changed if not locked. The alternative means to activate non-hazard zone mode require deliberate action by the user and the change to the non-hazard zone mode is required to be announced.

Related Item

- 11.2.2

Submitter Information Verification

Submitter Full Name: James Connolly
Organization: The Connolly Group Llc
Street Address:
City:
State:
Zip:
Submittal Date: Thu Dec 21 13:17:48 EST 2023
Committee: FAE-ELS

Committee Statement

Committee Action: Rejected but see related SR
Resolution: SR-31-NFPA 1930-2024
Statement: The minimum volume level has been adjusted to help alleviate identified audio issues and gives AHJs more flexibility. Also, the ability to selectively toggle hazard zone mode, by switch or channel, will improve the experience of agencies with a limited number of tactical channels and reduce nuisance volume levels when powering up the radio for use in nonhazard zones.

Public Comment No. 14-NFPA 1930-2023 [Section No. 11.2.3 [Excluding any Sub-Sections]]

~~When initially powered on, the RF device shall default to the hazard zone mode.~~

Statement of Problem and Substantiation for Public Comment

This requirement causes radio operation to be confusing and often unpredictable. We need to recognize that a user on a fire department providing fire and EMS services might only be using a channel that operates in the hazard zone mode a small percentage (e.g., 10-25%) of the time the radio is in use. That same user might only actually be in the hazard zone even less time (e.g., 5-10%) the radio is in use. The radio user needs to select the channel to be used out of potentially hundreds of available channels and potentially dozens of hazard zone channels. Having the radio change to a random hazard zone channel when powered on is counterproductive to the overall safety goal. Changing to a random channel that is different than the where the channel selector indicates can be even more confusing when a radio is accidentally powered off during an incident. Personnel can face safety risks even when operating outside of a "hazard zone" such as an EMS call involving a weapon or when operating on vehicle accident scenes. The radio changing to a random hazard zone channel and the radio user potentially losing communications with dispatch or incident command creates a safety risk rather than improving firefighter safety. Changing to a random hazard zone channel is also in conflict with Section 11.1.6 that states all controls shall be designed to prevent unintentional activation, deactivation, and change of operation.

Related Item

• 11.2.3

Submitter Information Verification

Submitter Full Name: James Connolly
Organization: The Connolly Group Llc
Street Address:
City:
State:
Zip:
Submittal Date: Sun Dec 03 19:33:50 EST 2023
Committee: FAE-ELS

Committee Statement

Committee Action: Rejected but see related SR
Resolution: SR-31-NFPA 1930-2024
Statement: The minimum volume level has been adjusted to help alleviate identified audio issues and gives AHJs more flexibility. Also, the ability to selectively toggle hazard zone mode, by switch or channel, will improve the experience of agencies with a limited number of tactical channels and reduce nuisance volume levels when powering up the radio for use in nonhazard zones.

Public Comment No. 15-NFPA 1930-2023 [New Section after 11.12.2.2.3]

11.12.2.2.3.1 The RF Device shall attempt to repeat overridden announcements a minimum of one time.

11.12.2.2.3.2 The number of attempts to repeat overridden announcements shall be configurable by the AHJ.

Statement of Problem and Substantiation for Public Comment

This comment adds the change made in TIA log no.1763 to the next edition and expands the design requirement to limit the number of attempts an RF device makes to repeat an overridden voice announcement. The TIA added the requirement to attempt to repeat an overridden voice announcement a minimum of one time. The substantiation for the TIA suggested that the number of times that the radio attempts to repeat announcements should be configurable by the agency (AHJ), however it did not state this as a design requirement. This comment adds this requirement.

Related Item

• TIA 1763

Submitter Information Verification

Submitter Full Name: James Rose
Organization: Safety Equipment Institute
Street Address:
City:
State:
Zip:
Submittal Date: Mon Dec 04 21:34:56 EST 2023
Committee: FAE-ELS

Committee Statement

Committee Action: Rejected but see related SR
Resolution: SR-30-NFPA 1930-2024
Statement: Adding TIA language to next edition.

Public Comment No. 44-NFPA 1930-2023 [Section No. 11.12.5.1 [Excluding any Sub-Sections]]

Channel, talkgroup, talk path voice announcements, and other preprogrammed voice announcements in the hazard zone mode and when transitioning from the hazard zone mode to the nonhazard zone mode shall be at ~~a minimum of 82 dBA measured at 1 m, + 0.1/- 0 m, perpendicularly to the RF device speaker output with the sound level meter set to A-weighting with a fast response time (LAF).~~ the volume level specified in 11.2.1.2.

Statement of Problem and Substantiation for Public Comment

Announcements at 82 dB are distracting, and are interfere with other verbal communication. 82dB is equivalent to a loud vacuum cleaner. While there are some loud fireground situations, there are many other situations that do not require such loud volume levels. Making all radios operate with very high volume levels on hazard zone channels is a significant disincentive for agencies to purchase and deploy NFPA compliant radios which should be the ultimate goal of the committee

Related Item

- 11.12.5.1

Submitter Information Verification

Submitter Full Name: James Connolly
Organization: The Connolly Group Llc
Street Address:
City:
State:
Zip:
Submittal Date: Thu Dec 21 13:26:36 EST 2023
Committee: FAE-ELS

Committee Statement

Committee Action: Rejected but see related SR
Resolution: SR-32-NFPA 1930-2024
Statement: The minimum volume level has been adjusted to help alleviate identified audio issues and gives AHJs more flexibility.

Public Comment No. 40-NFPA 1930-2023 [Section No. 11.17.2]

11.17.2

The following functions shall be tested in self-check:

(1) * RSM connectivity to the RF device

(2) Loss of antenna connection to the RF device

(3) Temperature exposure over manufacturer recommended overheat temperature

(4) ~~Battery with at least 50 percent of the total capacity available (power-up only)~~

(5)

Statement of Problem and Substantiation for Public Comment

Battery levels below 50% occur much more frequently than other self check failures. A battery with six hours of capacity remaining is not equivalent to other potential self check failures. Since firefighters are not typically looking at a display screen, they are likely to ignore frequent self check failures. This can result in critical self check failures such as loss of antenna connection to be ignored. Battery level announcements should be separate and distinct from self check failures. See proposed new 11.17.4 and 11.17.5.

Related Item

• 11.17.2

Submitter Information Verification

Submitter Full Name: James Connolly
Organization: The Connolly Group Llc
Street Address:
City:
State:
Zip:
Submittal Date: Thu Dec 21 12:14:37 EST 2023
Committee: FAE-ELS

Committee Statement

Committee Action: Rejected but see related SR

Resolution: SR-33-NFPA 1930-2024

Statement: Battery levels below 50% occur much more frequently than other self check failures. A battery with six hours of capacity remaining is not equivalent to other potential self check failures. Since firefighters are not typically looking at a display screen, they are likely to ignore frequent self check failures. This can result in critical self check failures such as loss of antenna connection to be ignored. Battery level announcements should be separate and distinct from self check failures.

Public Comment No. 41-NFPA 1930-2023 [New Section after 11.17.3]

Battery Level Announcement

11.17.4 On power up the RF device shall by default voice announce the battery level percentage or the battery level range (high, medium, low, critical) consistent with 11.1.4.2

11.17.5 The RF device shall support the ability to voice announce the battery level thresholds as defined in 11.1.4.2.

Statement of Problem and Substantiation for Public Comment

If 11.17.2 (4) is eliminated, 11.17.4 provides more definitive information on battery status when the RF device is powered up. This provides the user with helpful data on the status of their radio battery on start up and does not confuse users with other critical self check failures. 11.17.5 allows users to determine at what battery level they want to receive voice announcements. The need to be aware of critical battery levels can vary widely depending on how and where RF devices are being used (e.g. Wildland deployment vs structural firefighting with a 30 minute SCBA cylinder).

Related Item

- 11.17.2

Submitter Information Verification

Submitter Full Name: James Connolly
Organization: The Connolly Group Llc
Street Address:
City:
State:
Zip:
Submittal Date: Thu Dec 21 13:05:38 EST 2023
Committee: FAE-ELS

Committee Statement

Committee Action: Rejected but see related SR
Resolution: SR-34-NFPA 1930-2024
Statement: This revision provides more definitive information on battery status when the RF device is powered up. This provides the user with helpful data on the status of their radio battery on start-up and does not confuse users with other critical self-check failures.

Public Comment No. 11-NFPA 1930-2023 [Section No. 11.22.2 [Excluding any Sub-Sections]]

RF devices and RSMs shall at a minimum be suitable for use in Class I, Division 2, Groups C and D; Class II, Division 2, Groups F and G; and Class III, Divisions 1 and 2 hazardous (classified) locations, ~~and~~ with a temperature class within the range of T3 through T6 inclusive in accordance with UL 121201, *Nonincendive Electrical Equipment for Use in Class I and II, Division 2 and Class III, Divisions 1 and 2 Hazardous (Classified) Locations* , Ninth Edition, 2017 .

Statement of Problem and Substantiation for Public Comment

RF devices and RSMs rely on UL 121201 Niinth Edition as the HazLoc standard for nonncendive. Therefore, it needs to be included as a Normative reference here, not just in an Informative Annex. Further, this addition aligns NFPA 1930 with the comparable text in NFPA 1970.

Related Item

• First Revision No. 67-NFPA 1930-2023 [Section No. 11.22]

Submitter Information Verification

Submitter Full Name: Paul Kelly
Organization: UL Solutions
Street Address:
City:
State:
Zip:
Submittal Date: Wed Nov 29 17:27:02 EST 2023
Committee: FAE-ELS

Committee Statement

Committee Action: Rejected but see related SR
Resolution: SR-18-NFPA 1930-2024
Statement: RF devices and RSMs rely on UL 121201 Ninth Edition as the HazLoc standard for nonincendive. Therefore, it needs to be included as a Normative reference here, not just in an Informative Annex. Further, this addition aligns NFPA 1930 with the comparable text in NFPA 1970.

Public Comment No. 20-NFPA 1930-2023 [Section No. 11.22.2.1]

11.22.2.1 Interconnection of Nonincendive Equipment, Electrically Interconnected Types .

11.22.2.1.1

Interconnection of separately certified nonincendive equipment, electrically interconnected types, shall be by means of a ~~connection~~ plug and jack that ~~complies~~ comply with the RFDC requirements as specified in Section 11.10.

11.22.2.1.2

The electrical parameters for this interconnection shall be in accordance with Table 11.22.2.1.2.

Table 11.22.2.1.2 Electrical Parameters for Interconnection of Nonincendive Equipment, Electrically Interconnected Types

~~max~~

-	RFDC as source	Required relationship	RFDC as sink	-
	Uo ≤ 8 V	Uo ≤ Ui	Ui ≥ 10 ~~V max~~ V	
	Io ≤ 500 mA	Io ≤ Ii	Ii ≥ 1 ~~A max~~ A	
	Co ≥ 69 µF	Co ≥ Ci + Ccable*	Ci ≤ 68 ~~µF max~~ µF	
	Lo ≥ 320 µH	Lo ≥ Li + Lcable*	Li ≤ 315 µH	
-	-	-	-	
	-	-		
	-	-		
	-	-		
	-	-		

* Assumption for cable capacitance (Ccable) and cable inductance (Lcable): 200 pF/m and 1 µH/m.

Statement of Problem and Substantiation for Public Comment

These revisions align NFPA 1930 with NFPA 1970, with the word "max" in particular being unnecessary and adding no value.

Related Item

• First Revision No. 67-NFPA 1930-2023 [Section No. 11.22]

Submitter Information Verification

Submitter Full Name: Paul Kelly
Organization: UL Solutions
Street Address:
City:
State:
Zip:

Submittal Date: Tue Dec 05 20:07:35 EST 2023
Committee: FAE-ELS

Committee Statement

Committee Action: Rejected but see related SR
Resolution: SR-19-NFPA 1930-2024
Statement: These revisions align NFPA 1930 with NFPA 1970, with the word "max" in particular being unnecessary.

Public Comment No. 21-NFPA 1930-2023 [Section No. 11.22.3.1]

11.22.3.1*

RF devices and RSMs shall be permitted to be certified for use in Class I, Division 1, Groups C and D; Class II, Division 1, Groups E, F, and G; and Class III, Divisions 1 and 2 hazardous (classified) locations, ~~and~~ with a temperature class within the range of T3 through T6 inclusive in accordance with TIA-4950-A or TIA-4950-B, *Requirements for Battery-Powered, Portable Land Mobile Radio Applications in Class I, II, and III, Division 1, Hazardous (Classified) Locations*, 2014 or 2020, respectively, or UL 913, *Intrinsically Safe Apparatus and Associated Apparatus for Use in Class I, II, III, Division 1, Hazardous (Classified) Locations* .

Statement of Problem and Substantiation for Public Comment

RF devises and RSMs rely on UL 913 Sixth Edition as the HazLoc standard for intrinsic safety. Therefore, it needs to be included as a Normative reference here, not just in an Informative Annex. Further, this addition aligns NFPA 1930 with the comparable text in NFPA 1970.

Related Item

• First Revision No. 67-NFPA 1930-2023 [Section No. 11.22]

Submitter Information Verification

Submitter Full Name: Paul Kelly
Organization: UL Solutions
Street Address:
City:
State:
Zip:
Submittal Date: Tue Dec 05 20:25:24 EST 2023
Committee: FAE-ELS

Committee Statement

Committee Action: Rejected but see related SR

Resolution: SR-20-NFPA 1930-2024

Statement: RF devices and RSMs rely on UL 913 Sixth Edition and TIA 4950-A and B as the HazLoc standard for intrinsic safety. Therefore, they need to be included as Normative reference here, not just in an Informative Annex. Further, this addition aligns NFPA 1930 with the comparable text in NFPA 1970.

This additional wording, adding the title to 11.22.3.2, provides immediately apparent clarifying details regarding the area of concern.

Removed annex material no longer necessary.

Public Comment No. 22-NFPA 1930-2023 [Section No. 11.22.3.2]

11.22.3.2– Interconnection of Intrinsically Safe Systems.

RF devices and RSMs that are certified as part of an intrinsically safe system shall only be interconnected with compatible devices also certified as part of the same intrinsically safe system.

Statement of Problem and Substantiation for Public Comment

This additional wording provides immediately apparent clarifying details regarding the area of concern. Further, this addition aligns NFPA 1930 with the comparable text in NFPA 1970.

Related Item

• First Revision No. 67-NFPA 1930-2023 [Section No. 11.22]

Submitter Information Verification

Submitter Full Name: Paul Kelly
Organization: UL Solutions
Street Address:
City:
State:
Zip:
Submittal Date: Tue Dec 05 20:31:27 EST 2023
Committee: FAE-ELS

Committee Statement

Committee Action: Rejected but see related SR

Resolution: SR-20-NFPA 1930-2024

Statement: RF devices and RSMs rely on UL 913 Sixth Edition and TIA 4950-A and B as the HazLoc standard for intrinsic safety. Therefore, they need to be included as Normative reference here, not just in an Informative Annex. Further, this addition aligns NFPA 1930 with the comparable text in NFPA 1970.

This additional wording, adding the title to 11.22.3.2, provides immediately apparent clarifying details regarding the area of concern.

Removed annex material no longer necessary.

Public Comment No. 46-NFPA 1930-2023 [Chapter 12]

Chapter 12 Performance Requirements (NFPA 1802)

12.1 RF Device, RSM, and RF Subscriber Ensemble Requirements.

12.1.1

The radio frequency (RF) device, remote speaker microphone (RSM), and RF subscriber ensemble shall be tested for speech quality in the analog mode as specified in Section 13.2.

12.1.1.1

If equipped with digital mode, the RF device shall be tested in the analog mode in addition to any digital modes as specified in Section 13.2.

12.1.1.2*

The RF device, RSM, and RF subscriber ensemble shall have a minimum speech quality result of 2.5.

12.1.2 Display Surface.

12.1.2.1

RF device, RSM, and RF subscriber ensemble display surfaces shall be tested for abrasion resistance as specified in Section 13.7.

12.1.2.2

RF device, RSM, and RF subscriber ensemble display surfaces shall not exhibit an average delta haze greater than 14 percent.

12.1.3 Vibration Resistance.

12.1.3.1

The RF device, RSM, and RF subscriber ensemble shall be tested for resistance to vibration as specified in Section 13.4.

12.1.3.2

The RF device, RSM, and RF subscriber ensemble shall have a minimum speech quality result of 2.5.

12.1.3.3

The RF device shall be evaluated for functioning of data logging as specified in Section 11.19.

12.1.4 Heat and Immersion Leakage.

12.1.4.1

The RF device, RSM, and RF subscriber ensemble shall be tested for heat and immersion leakage resistance as specified in Section 13.3.

12.1.4.2

The RF device, RSM, and RF subscriber ensemble shall have no water leakage inside the electronics compartment(s) and the power source compartment(s).

12.1.4.3

The RF device, RSM, and RF subscriber ensemble shall have a speech quality result of 2.5.

~~13.3.~~

12.1.4.4 ~~–~~

~~Portable, handheld communication RF devices, RSMs, and RF subscriber ensemble shall be evaluated per~~

5

~~and 13.3.6 .~~

~~12.1.4.5~~

The RF device shall be evaluated for proper functioning of data logging as specified in Section 11.19.

12.1.5 High-Temperature Functionality.

12.1.5.1

The RF device, RSM, and RF subscriber ensemble shall be tested for resistance to heat as specified in Section 13.8.

12.1.5.2

The RF device, RSM, and RF subscriber ensemble shall not melt, drip, or ignite.

12.1.5.3

The RF device, RSM, and RF subscriber ensemble shall have a minimum speech quality result of 2.5.

12.1.5.4

The RF device shall be evaluated for functionality of data logging as specified in Section 11.19.

12.1.6 Ingress Protection.

12.1.6.1

The RF device, RSM, and RF subscriber ensemble shall be tested for ingress protection (IP) rating as specified in IEC 60529, *Degrees of protection provided by enclosures (IP Code).*

12.1.6.2

The RF device, RSM, and RF subscriber ensemble shall have a rating of IP6X.

12.1.7 Impact Resistance.

12.1.7.1

The RF device, RSM, and RF subscriber ensemble shall be tested for resistance to impact as specified in Section 13.5.

12.1.7.2

The RF device, RSM, and RF subscriber ensemble shall have a minimum speech quality result of 2.5.

12.1.7.3

The RF device shall be evaluated for functionality of data logging as specified in Section 11.19.

12.1.8 Corrosion Resistance.

12.1.8.1

The RF device, RSM, and RF subscriber ensemble shall be tested for resistance to corrosion as specified in Section 13.6.

12.1.8.2

The RF device, RSM, and RF subscriber ensemble shall have a minimum speech quality result of 2.5.

12.1.9 Integrity.

12.1.9.1

The RF device, RSM, and RF subscriber ensemble shall be tested for integrity as specified in Section 13.12.

12.1.9.2

The RF device, RSM, and RF subscriber ensemble shall have no case, housing, or closure damage.

12.1.9.3

The RF device, RSM, and RF subscriber ensemble shall have a minimum speech quality result of 2.5.

12.1.9.4

The RF device shall be evaluated for functionality of data logging as specified in Section 11.19.

12.1.10 Cable Pullout.

12.1.10.1

The RF device, RSM, and RF subscriber ensemble shall be tested for cable pullout as specified in Section 13.11.

12.1.10.2

The RF device, RSM, and RF subscriber ensemble shall have a minimum value of 156 N +9/−0 N (35 lbf +2/−0 lbf) in the direction of the wiring.

12.1.10.3

Separation of interconnecting wiring of any specimen shall constitute failing performance.

12.1.11 Heat and Flame Resistance.

12.1.11.1

The RF device, RSM, and RF subscriber ensemble shall be tested for resistance to heat and flame as specified in Section 13.9.

12.1.11.2

The RF device, RSM, and RF subscriber ensemble shall not have the afterflame exceed 2.2 seconds.

12.1.11.3

The RF device, RSM, and RF subscriber ensemble shall have nothing fall off.

12.1.11.4

The RF device, RSM, and RF subscriber ensemble shall not fall from their mounted position.

12.1.11.5

The RF device, RSM, and RF subscriber ensemble shall function as follows:

(1) The RF devices and RSMs shall be activated using the power/volume knob as specified in Section 11.4.

(2) The selector knob shall function as specified in Section 11.5.

(3) The emergency button shall function as specified in Section 11.~~9~~ 8 .

(4) The display shall function as specified in Section 11.6.

(5) The remote mic audio connection shall function as specified in Section 11.10.

12.1.11.6

The RF device shall be evaluated for proper functioning of data logging as specified in Section 11.19.

12.1.12 Durability and Legibility.

12.1.12.1

The RF device, RSM, and RF subscriber ensemble shall be tested for durability and legibility as specified in Section 13.10.

12.1.12.2

Product labels shall remain attached to the RF devices and RSMs.

12.1.12.3

Product labels shall be able to be read by the untrained eye for the following exposures:

(1) Corrosion

(2) ~~Heat resistance~~ High-Temperature Functionality

(3) Durability

12.1.13 Water Drainage.

12.1.13.1

The RF device, RSM, and RF subscriber ensemble shall be tested for water drainage as specified in Section 13.13.

12.1.13.2

The RF device shall be evaluated for functionality of data logging as specified in Section 11.19.

12.1.14 Electronic Temperature Stress.

12.1.14.1

The RF device, RSM, and RF subscriber ensemble shall be tested for resistance to electronic temperature stress as specified in Section 13.19.

12.1.14.2

The RF device shall receive and display the user ID of another RF device in the analog mode.

12.1.14.3

The RF device shall transmit its user ID to another RF device in the analog mode.

12.1.15 Tumble-Vibration Resistance.

12.1.15.1

The RF device, RSM, and RF subscriber ensemble shall be tested for resistance to vibration as specified in Section 13.14.

12.1.15.2

The RF device, RSM, and RF subscriber ensemble shall have a minimum speech quality result of 2.5.

12.1.15.3

The RF device shall be evaluated for functioning of data logging as specified in Section 11.19.

12.2 ~~RF Device Requirements~~ _ Power Source Performance .

12.2.1

The RF device shall be tested for continuous operation as specified in Section 13.18.

12.2.1.1

The RF device shall be capable of continuous operation for at least 8 hours on a standard-duty cycle of 10-10-80 at the RF device's maximum allowable transmit power for the band of operation.

12.2.1.2 ~~– Testing.~~ 3 _ RF Device Requirements.

12.2 3 .1.2.1 –

The RF device shall be tested according to Section 13.15 and meet the requirements for carrier output power 2.2.1 (analog) as specified in TIA-603-E, *Land Mobile FM or PM — Communications Equipment — Measurement and Performance Standards,* and RF power output 3.2.1 (digital) as specified in TIA-102.CAAB-E, *Land Mobile Radio Transceiver Performance Recommendations, Digital Radio Technology, C4FM/CQPSK Modulation*.

12.2 3 .1.2.2 – 1

Transmit power shall not decrease by more than 1 dB for the first 8 hours.

12.2.1.3 – 3.2

The RF device shall be tested according to Section 13.16 and meet the requirements for carrier frequency stability 2.2.2 (analog) as specified in TIA-603-E, *Land Mobile FM or PM — Communications Equipment — Measurement and Performance Standards,* and operating frequency accuracy 3.2.2 (digital) as specified in TIA-102.CAAB-E, *Land Mobile Radio Transceiver Performance Recommendations, Digital Radio Technology, C4FM/CQPSK Modulation*.

12.2 3 .1.4 3 *

The RF device shall be tested according to Section 13.17 and meet the Class A requirements for reference sensitivity 2.1.4 (analog) as specified in TIA-603-E, *Land Mobile FM or PM — Communications Equipment — Measurement and Performance Standards,* and reference sensitivity 3.1.4 (digital) as specified in TIA-102.CAAB-E, *Land Mobile Radio Transceiver Performance Recommendations, Digital Radio Technology, C4FM/CQPSK Modulation*.

12.3 – 4 RF Antenna Requirements.

12.3 4 .1

The RF antenna shall be tested in accordance with Section 13.20.

12.3 4 .2

The RF antenna shall exhibit a voltage standing wave ratio (VSWR) increase of no more than 41 percent across the bandwidth.

Statement of Problem and Substantiation for Public Comment

Removing redundant section (12.1.4.4), correcting section reference for EAB in section 12.1.11.5, updating "Heat resistance" to "High Temperature Functionality" in section 12.1.12.3 for consistency throughout the document, and correcting section titles and numbering for 12.2 and 12.3

Related Item

- Editorial

Submitter Information Verification

Submitter Full Name: Benjamin Hanna
Organization: Safety Equipment Institute (SE
Street Address:
City:
State:
Zip:
Submittal Date: Fri Dec 22 09:12:09 EST 2023
Committee: FAE-ELS

Committee Statement

Committee Action: Rejected but see related SR

Resolution:	SR-47-NFPA 1930-2024
Statement:	Removing a duplicate requirement to reduce confusion.

Public Comment No. 39-NFPA 1930-2023 [New Section after 12.1.7.2]

12.1.7.3

The RF device, RSM, and RF subscriber ensemble shall not incur damage that affects the normal operation or enclosure integrity.

Statement of Problem and Substantiation for Public Comment

This requirement is included within the Impact Acceleration Resistance Test method (Section 13.5.4.6), but because it is a performance requirement, it should also be stated in Chapter 12, Performance Requirements.

Related Item

- Editorial

Submitter Information Verification

Submitter Full Name: Benjamin Hanna
Organization: Safety Equipment Institute (SE
Street Address:
City:
State:
Zip:
Submittal Date: Mon Dec 18 14:35:05 EST 2023
Committee: FAE-ELS

Committee Statement

Committee Action: Rejected but see related SR
Resolution: SR-40-NFPA 1930-2024
Statement: This requirement is included within the Impact Acceleration Resistance Test method (Section 13.5.4.6), but because it is a performance requirement, it should also be stated in Chapter 12, Performance Requirements.

Public Comment No. 34-NFPA 1930-2023 [New Section after 12.1.13.1]

12.1.13.2

The RF device, RSM, and RF subscriber ensemble shall have a minimum speech quality result of 2.5.

Statement of Problem and Substantiation for Public Comment

This added section clarifies that the speech quality requirement of 2.5 is applicable when tested as part of the water drainage test. Currently, the test requires speech quality testing and reporting of those results, however the P/F value is not directly stated under section 12.1.13. The section is currently interpreted to require the speech quality value of 2.5 as stated in section 12.1.1.2. Adding the requirement here makes it clearer.

Related Item

• FR-60 editorial changes

Submitter Information Verification

Submitter Full Name: Benjamin Hanna
Organization: Safety Equipment Institute (SE
Street Address:
City:
State:
Zip:
Submittal Date: Tue Dec 12 14:34:40 EST 2023
Committee: FAE-ELS

Committee Statement

Committee Action: Rejected but see related SR
Resolution: SR-41-NFPA 1930-2024
Statement: This added section clarifies that the speech quality requirement of 2.5 is applicable when tested as part of the water drainage test. Currently, the test requires speech quality testing and reporting of those results, however the P/F value is not directly stated under section 12.1.13. The section is currently interpreted to require the speech quality value of 2.5 as stated in section 12.1.1.2. Adding the requirement here makes it clearer.

Public Comment No. 38-NFPA 1930-2023 [Section No. 12.3.2]

12.3.2 _

The RF antenna shall exhibit a voltage standing wave ratio (VSWR)

~~increase of no more than 41 percent across the bandwidth.~~

_ that is less than or equal to the manufacturer's design specification for maximum VSWR [BH1] _ as tested with its test fixture.

_ [BH1] Update P/F criteria to manufacturer's spec

Statement of Problem and Substantiation for Public Comment

Submitted on behavl of the NFPA 1802 task group assembled during the first draft meeting (includes Motorola, L3Harris, JVCKenwood, SEI, Intertek) to address various technical issues.

Updated VSWR performance criteria to ensure antennas operating as designed do not fail. The current P/F criteria is not a minimum performance requirement, but a relative performance requirement that allows an antenna to fail when it is operating as designed.

Related Item

• FR38

Submitter Information Verification

Submitter Full Name: Dan Ericson
Organization: L3Harris Corporation
Affiliation: Representing NFPA 1802 task group
Street Address:
City:
State:
Zip:
Submittal Date: Mon Dec 18 13:35:07 EST 2023
Committee: FAE-ELS

Committee Statement

Committee Action: Rejected but see related SR
Resolution: SR-52-NFPA 1930-2024
Statement: Updated VSWR performance criteria to ensure antennas operating as designed do not fail. The current P/F criteria is not a minimum performance requirement, but a relative performance requirement that allows an antenna to fail when it is operating as designed.

Public Comment No. 47-NFPA 1930-2023 [Chapter 13]

Chapter 13 Test Methods (NFPA 1802)

13.1 Sample Preparation.

13.1.1 Application.

13.1.1.1

The sample preparation procedures contained in 13.1.2 through 13.1.4 shall apply to each test method in this chapter, as specifically referenced in each test method.

13.1.1.2

The device's battery shall be fully charged before each test as well as before the 10-10-80 duty cycle in 12.2.1.1.

13.1.1.3

Only the specific sample preparation procedure(s) referenced in each test method shall be applied to that test method.

13.1.1.4

Samples shall be complete devices.

13.1.1.5

Specimens for testing shall be complete devices.

13.1.1.6

A minimum of three specimens shall be tested.

13.1.1.7

Specimens shall be set as follows:

(1) Volume shall be set to maximum or as specified by the manufacturer.

(2)* FM modulation shall be set to analog.

(3) Channel bandwidth shall be set as follows:

(4) VHF/UHF/700 — 12.5 kHz (narrowband)

(5) 800 band non-NPSPAC channels — 12.5 kHz (narrowband)

(6) 800 band NPSPAC channels — 12.5 kHz (narrowband)

(7) Transmit power shall be set to maximum or as specified by the manufacturer.

(8) Hazard zone mode shall be enabled.

13.1.2 Room Temperature Conditioning Procedure.

13.1.2.1

Specimens shall be conditioned at a temperature of 22°C ±3°C (72°F ± 5°F) and relative humidity (RH) of 50 percent ±25 percent for at least 4 hours.

13.1.2.2

Testing shall begin within 5 minutes of the specimens being removed from the conditioning.

13.1.3 Cold Temperature Conditioning Procedure.

13.1.3.1

Specimens shall be exposed to a temperature of −20°C, +0/−3°C (−4°F, +0/−5°F) for at least 4 hours.

13.1.3.2

Testing shall begin within 30 seconds of the specimens being removed from the conditioning.

13.1.4 Elevated Temperature Conditioning Procedure.

13.1.4.1

Specimens shall be exposed to a temperature of 71°C, +1/−0°C (160°F, +2/−0°F) for at least 4 hours.

13.1.4.2

Testing shall begin within 30 seconds of the specimens being removed from the conditioning.

13.2 Speech Quality Test.

13.2.1 Apparatus.

13.2.1.1 Testing Chamber.

Testing shall be conducted in a chamber having the following characteristics, at a minimum:

(1) Ambient noise level inside the chamber shall be at least NC-25.

(2) Walls and ceiling shall be ≥90 percent absorptive for equal to or less than 200 Hz.

(3) Clearance from test specimens shall be ≥1 m (≥3.3 ft).

13.2.1.2 Acoustic Treatment.

All room surfaces above the floor shall be acoustically treated for internal acoustic absorption as well as for external noise mitigation.

13.2.1.3 Simulator.

A G.R.A.S. KEMAR head and torso simulator (HATS), type 45BM or equivalent, shall be used for testing.

13.2.1.3.1 Tone.

13.2.1.3.1.1

The mouth simulator shall be capable of producing 1 kHz sine tone at a sound pressure level of 112 dBA as measured at 25 mm (1 in.) with the mouth reference point un-equalized.

13.2.1.3.1.2

The total harmonic distortion (THD) shall be ≤3 percent.

13.2.1.3.2 Frequency.

13.2.1.3.2.1

The mouth simulator frequency response shall be able to be equalized flat ±1 dB between 100 Hz and 10 kHz.

13.2.1.3.2.2

The response shall be –15 dB or less at 100 Hz and –20 dB or less at 15 kHz.

13.2.1.4 Sound Pressure Level (SPL) Meter.

The SPL meter having the following characteristics shall be used:

(1) The SPL meter shall be capable of measuring an equivalent continuous sound pressure level (L_{eq}) using an A-weighted filter.

(2) The SPL meter shall have a dynamic range from 30 dBA (or less) to 130 dBA (or greater).

(3) The SPL meter shall display the measurement to at least 0.1 dBA.

13.2.1.5 Pink Noise Generator.

A pink noise analog audio signal generator shall be used.

13.2.1.5.1

The pink noise analog audio signal generator shall be capable of generating pink noise and sine waves from –80 dBu to –2 dBu in one-dBu steps, with a THD+N of –90 dB (0.0032 percent) at 8 dBu noise floor type 25 µv.

13.2.1.5.2

The pink noise analog audio signal generator shall have the following characteristics:

(1) A frequency range of 10 Hz to 20 kHz adjustable in one-digit steps resolution ±0.01 percent

(2) An amplitude accuracy of ±0.5 dB or less

13.2.1.6 Digital Equalizer.

13.2.1.6.1

A digital equalizer shall be used.

13.2.1.6.2

The digital equalizer shall be capable of equalizing the frequency response of the HATS mannequin within ±1 dB flat between 100 Hz and 10 kHz.

13.2.1.7 Microphone.

A microphone having the following characteristics shall be used:

(1) The microphone shall be a condenser type.

(2) The microphone polar pattern shall be omnidirectional.

(3) The frequency response shall be flat ±0.5 dB from 100 Hz to 15 kHz.

(4) The residual noise shall be ≤–30 dB.

(5) The microphone shall accept signals of at least 130 dBA.

13.2.1.8* Speech Quality Analyzer.

The speech quality analyzer shall have the following characteristics:

(1) Measures perceptual objective listening quality according to ITU-T P.863, *Perceptual Objective Listening Quality Assessment*, in narrowband operation

(2) Samples 16-bit linear audio input signal at 8 kHz or 16 kHz

(3) Handles voice files from 6 to 20 seconds in length

(4) Represents measurement result as the POLQA MOS value

13.2.1.9 Radio Test Set/Service Monitor.

An Aeroflex 3920 or equivalent radio test set/service monitor having the following characteristics shall be used:

(1) The radio test set/service monitor shall be capable of receiving and transmitting analog FM and P25 signals.

(2) The radio test set/service monitor shall operate over the frequency range of devices under test.

(3) The radio test set/service monitor shall be P25 phase 1 and phase 2 compatible.

13.2.1.10 Artificial Mouth.

The artificial mouth shall be calibrated as follows *(see Figure 13.2.1.10)*:

(1) The pink noise test signal from the HATS shall be equalized flat with pink noise from 100 Hz to 10 kHz to ±1dB on a ⅓ octave scale and adjusted to achieve an A-weighted sound level of 97 dBA ±0.5 dB at the mouth reference point (MRP), 50 mm ±3 mm (2 in. ±⅛ in.) from the HATS' mouth, or an inverse sine sweep from 100 Hz to 10 kHz to equalize the mouth shall be allowed.

(2) The levels for the 125 Hz octave band (the 100 Hz, 125 Hz, 160 Hz ⅓ octave bands) shall be reduced by 10 dB.

(3) The levels for the 250 Hz octave band (the 200 Hz, 250 Hz, 315 Hz ⅓ octave bands) shall be reduced by 2 dB.

(4) The speech quality test signal "Male1_1st_Set_8k.wav" shall be applied and the SPL adjusted until an average (SPL) (Leq) of 95 dBA ±0.5 dBA is achieved, over a period of time of 45 seconds ±15 seconds.

Figure 13.2.1.10 Calibration of the Artificial Mouth.

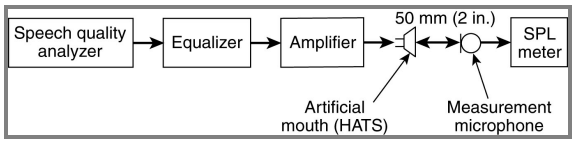

13.2.1.11 Artificial Ear.

The artificial ear shall be calibrated as follows *(see Figure 13.2.1.11)*:

(1) The microphone calibrator shall be applied to the artificial ear and set to the level specified by the manufacturer.

(2) The audio analyzer shall be calibrated according to the calibration procedure specified by the audio analyzer manufacturer.

Figure 13.2.1.11 Calibration of the Artificial Ear.

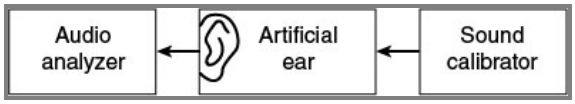

13.2.1.12 Speech Quality Measurement Setup.

13.2.1.12.1

The speech quality measurement shall be activated in the audio analyzer.

13.2.1.12.2

Each speech quality measurement shall be recorded for each test signal as follows:

(1) Four excitation speech signals, two male and two female, shall be selected by the speech quality analyzer as follows:

(2) Male1_1st_Set_8k.wav

(3) Male2_1st_Set_8k.wav

(4) Female1_1st_Set_8k.wav

(5) Female2_1st_Set_8k.wav

(6) The four excitation speech signals, two male and two female, shall be permitted to be altered to meet ITU P.86 requirements for testing.

(7) The mode in RF device and speech quality analyzershall be narrowband.

(8) When using narrowband, automatic gain control in the DUT shall be disabled and level alignment enabled in the speech quality analyzer, in accordance with Sub Section 3 of ITU P.86..

(9) The four speech quality readings shall be calculated and reported.

13.2.1.13 RF Device RFDC Transmit Audio Speech Quality Test.

The RF device RFDC transmit audio speech quality test shall be conducted in accordance with the following procedure *(see Figure 13.2.1.13)*:

(1) The radio test set/service monitor shall have deemphasis enabled, IF bandwidth of 12.5 kHz, and audio band pass filter of 300 Hz to 3.0 kHz.

(2) For wired connection, the audio signal from the speech quality test set shall be fed to the transmitting specimen via the RFDC at a level as specified by the manufacturer.

(3)* The audio signal from the radio test set/service monitor to the speech quality test shall be adjusted to achieve a 0.0 dBu nominal level.

(4) The RF signal between the RF device test set and the device under test (DUT) shall be directly connected (i.e., wired).

(5) The measurement shall be started and the speech quality reading measured and reported.

Figure 13.2.1.13 Measurement Setup for RF Device RFDC Transmit Audio Speech Quality Test.

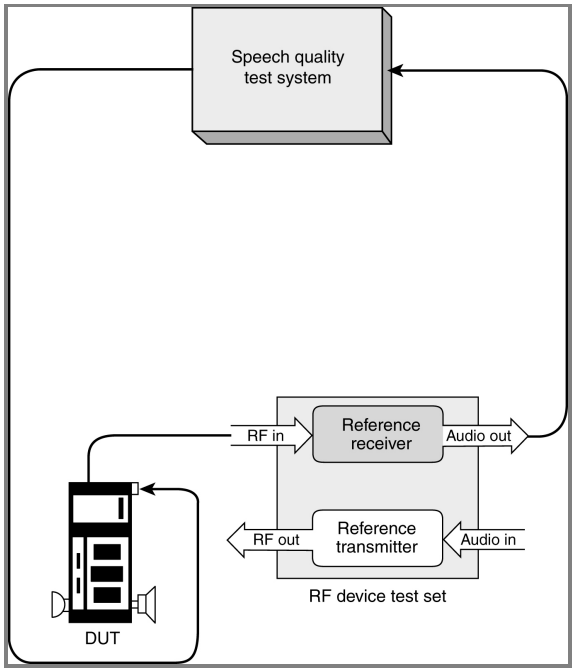

13.2.1.14 RF Device Bluetooth® Transmit Audio Speech Quality Test.

The RF device Bluetooth® transmit audio speech quality test shall be conducted in accordance with the following procedure *(see Figure 13.2.1.14)*:

(1) The radio test set/service monitor shall have de-emphasis enabled, IF bandwidth of 12.5 kHz, and audio band pass filter of 300 Hz to 3.0 kHz.

(2) The audio signal from the speech quality test set shall be fed to the transmitting specimen via Bluetooth® as specified by the manufacturer.

(3)* The audio signal from the radio test set/service monitor to the speech quality test shall be adjusted to achieve a 0.0 dBu nominal level.

(4) The RF signal between the RF device test set and the device under test (DUT) shall be directly connected (i.e., wired).

(5) The measurement shall be started and the speech quality reading measured and reported.

Figure 13.2.1.14 Measurement Setup for RF Device Bluetooth® Transmit Audio Speech Quality Test.

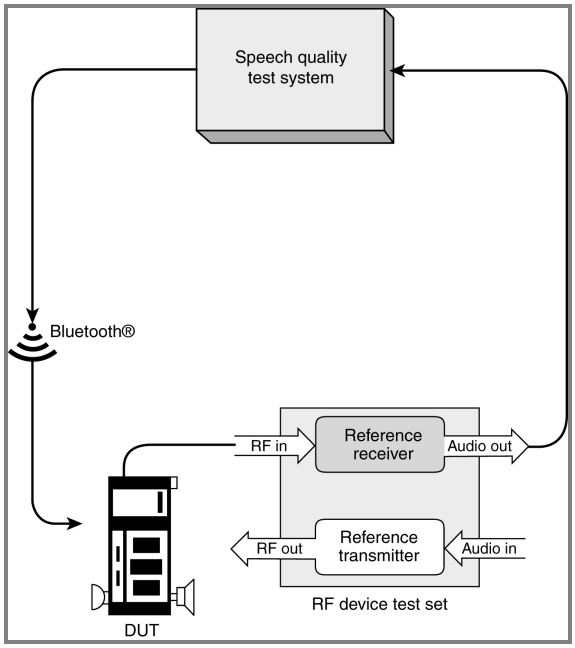

13.2.1.15 RF Device Internal Microphone Transmit Audio Speech Quality Test.

The RF device internal microphone transmit audio speech quality test shall be conducted in accordance with the following procedure *(see Figure 13.2.1.15)*:

(1) The RF device shall be set in accordance with the following procedure:

(2) The RF device shall be mounted in front of the artificial mouth via the manufacturer-provided fixture.

(3) The RF device internal microphone shall be centered to the artificial mouth at a horizontal axis distance of 50 mm ±5 mm (2 in. ±0.2 in.).

(4) The radio test set/service monitor shall have de-emphasis enabled, IF bandwidth of 12.5 kHz, and audio band pass filter of 300 Hz to 3.0 kHz.

(5) The audio signal shall be adjusted from the radio test set/service monitor to the speech quality test set for 0.0 dBu nominal.

(6) The audio signal from the speech quality test set shall be fed to the transmitting specimen via the calibrated mouth.

(7) The RF signal between the RF device test set and the DUT shall be directly connected (i.e., wired).

(8) The measurement shall be started and the speech quality result reading reported.

Figure 13.2.1.15 Measurement Setup for RF Device Internal Mic Transmit Audio Speech Quality Test.

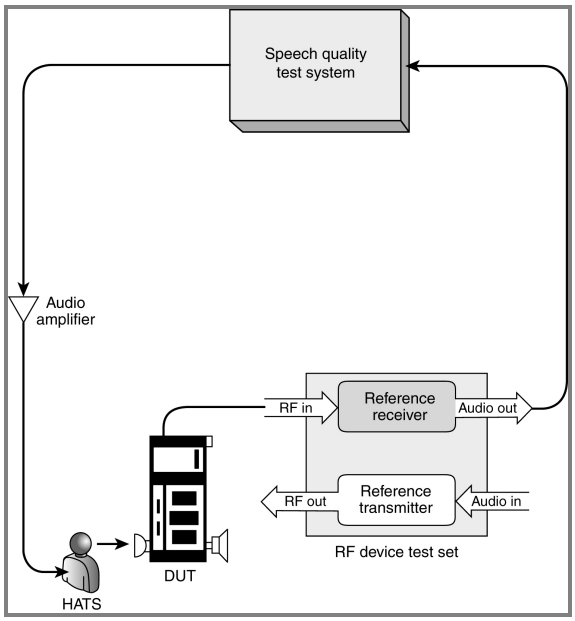

13.2.1.16 RF Device RFDC Receive Audio Speech Quality Test.

The RF device RFDC receive audio speech quality test shall be conducted in accordance with the following procedure *(see Figure 13.2.1.16)*:

(1) The volume of the RF device shall be set to the maximum rated audio as specified by the manufacturer.

(2) The audio output shall be scaled and ground referenced for the speech quality test system to achieve the best mean opinion score (MOS).

(3) The RF device test set/service monitor shall have preemphasis enabled and transmit power set to a level that provides a power level measured at the device under test (DUT) of −60 dBm ±3 dBm.

(4) The audio levels shall be adjusted and recorded from the speech quality test system until the FM peak modulation is between 2.0 kHz and 2.2 kHz from the service monitor using the “Male1_1st_Set_8k.wav” file and used throughout each individual test method.

(5) The RF signal between the RF device test set and the DUT shall be directly connected (i.e., wired).

(6) The drum reference point (DRP) to field-free transfer function shall be applied to receive testing using HATS' artificial ear.

(7) All alert tones shall be turned off for speech quality testing.

(8) The measurement shall be started and the speech quality result measured and reported.

Figure 13.2.1.16 Measurement Setup for RF Device RFDC Receive Audio Speech Quality Test.

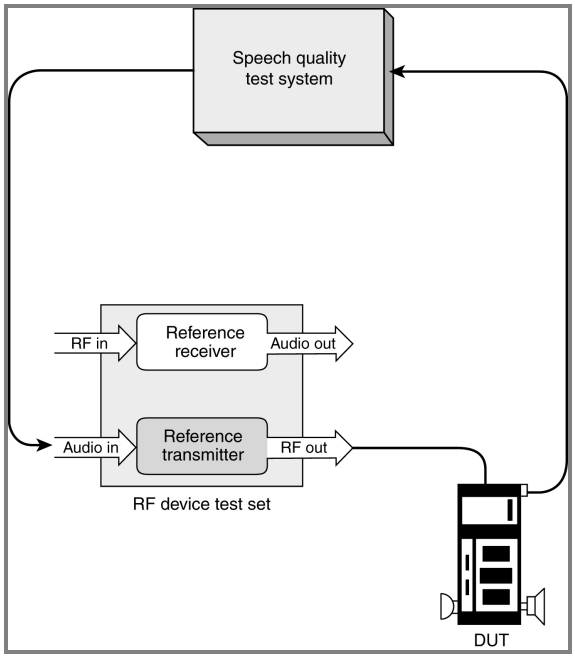

13.2.1.17 RF Device Bluetooth® Receive Audio Speech Quality Test.

The RF device Bluetooth® receive audio speech quality test shall be conducted in accordance with the following procedure *(see Figure 13.2.1.17)*:

(1) The volume of the RF device shall be set to the maximum rated audio as specified by the manufacturer.

(2) The audio output shall be scaled and ground referenced for the speech quality test system to achieve the best MOS.

(3) The RF device test set/service monitor shall have preemphasis enabled and transmit power set to a level that provides a power level measured at the device under test (DUT) of −60 dBm ±3 dBm.

(4) The audio levels shall be adjusted and recorded from the speech quality test system until the FM peak modulation is between 2.0 kHz and 2.2 kHz from the service monitor using the “Male1_1st_Set_8k.wav” file and used throughout each individual test method.

(5) The RF signal between the RF device test set and the DUT shall be directly connected (i.e., wired).

(6) The measurement shall be started and the speech quality result measured and reported.

Figure 13.2.1.17 Measurement Setup for RF Device Bluetooth® Receive Audio Speech Quality Test.

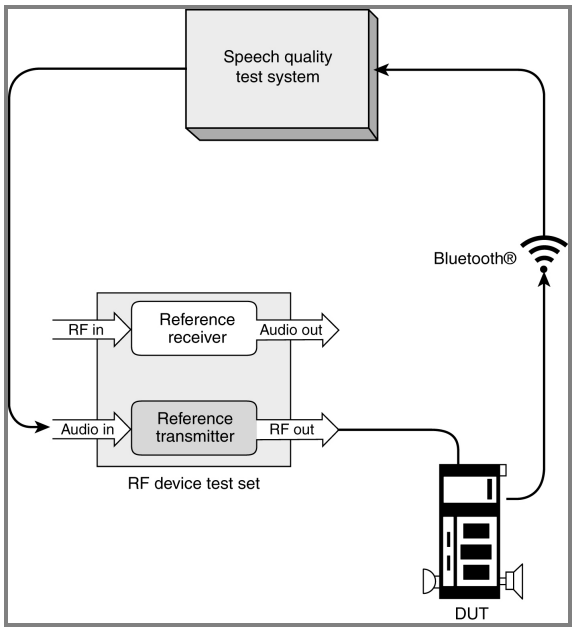

13.2.1.18 RF Device Speaker Receive Audio Speech Quality Test.

The RF device speaker receive audio speech quality test shall be conducted in accordance with the following procedure *(see Figure 13.2.1.18)*:

(1) The receiving RF device speaker shall be set in accordance with the following procedure:

(2) The receiving RF device speaker shall be mounted in front of the artificial ear via the manufacturer-provided fixture.

(3) The RF device speaker shall be centered to the artificial ear at a horizontal distance of 50 mm ±5 mm (2 in. ±0.2 in.).

(4) The volume of the RF device shall be set to the maximum rated audio as specified by the manufacturer.

(5) The RF device test set/service monitor shall have preemphasis enabled and transmit power set to a level that provides a power level measured at the device under test (DUT) of –60 dBm ±3 dBm.

(6) The audio levels shall be adjusted and recorded from the speech quality test system until the FM peak modulation is between 2.0 kHz and 2.2 kHz from the radio test set/service monitor using the “Male1_1st_Set_8k.wav” file and used throughout each individual test method.

(7) The input sensitivity of the speech quality analyzer shall be set to the level of the artificial ear calibration *(see 13.2.1.11)*.

(8) The RF signal between the RF device test set and the DUT shall be directly connected (i.e., wired).

(9) The measurement shall be started and the speech quality result reading reported.

Figure 13.2.1.18 Measurement Setup for RF Device Speaker Receive Audio Speech Quality Test.

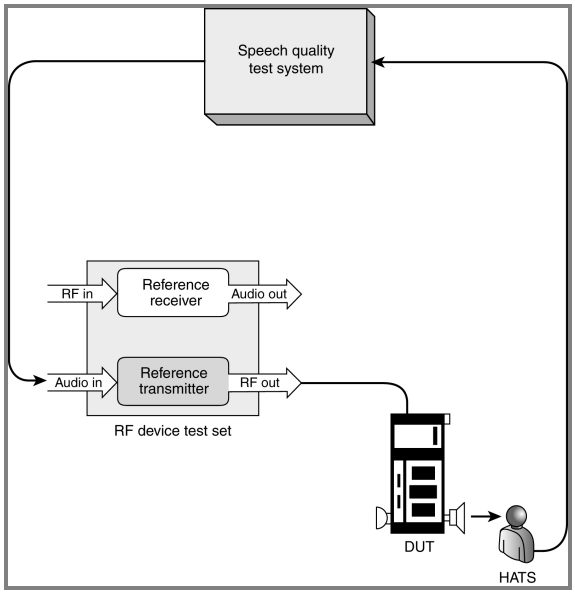

13.2.1.19 Wired RSM Audio Speech Quality Test.

The wired RSM audio speech quality test shall be conducted in accordance with the following procedure *(see Figure 13.2.1.19)*:

(1) The RSM shall be set in accordance with the following procedure:

(2) The RSM shall be mounted in front of the artificial mouth via the manufacturer-provided fixture.

(3) The wired RSM shall be centered to the artificial mouth at a horizontal axis distance of 50 mm ±5 mm (2 in. ±0.2 in.).

(4) The audio signal from the speech quality test set shall be fed to the RSM specimen via the calibrated mouth.

(5) The RSM shall be biased as specified by the manufacturer.

(6) The input level of the speech quality test shall be set to accommodate the audio level from the speaker microphone.

(7) The measurement shall be started and the speech quality result reading reported.

Figure 13.2.1.19 Measurement Setup for Wired RSM Audio Speech Quality Test.

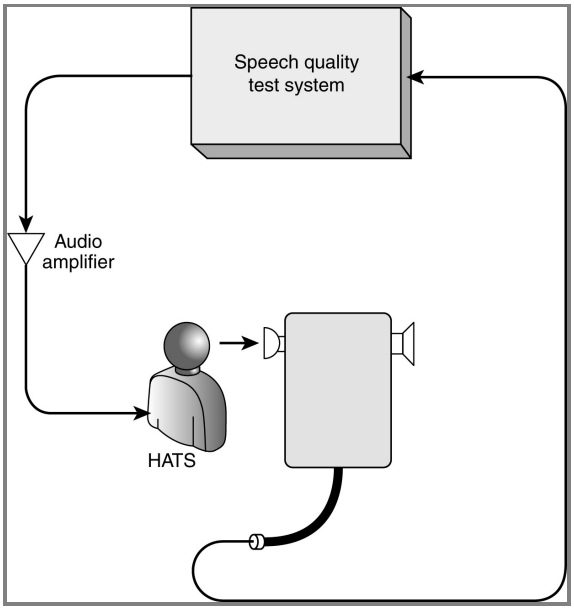

13.2.1.20 Wireless RSM Audio Speech Quality Test.

The wireless RSM audio speech quality test shall be conducted in accordance with the following procedure *(see Figure 13.2.1.20)*:

(1) The RSM shall be set in accordance with the following procedure:

(2) The RSM shall be mounted in front of the artificial mouth via the manufacturer-provided fixture.

(3) The wireless RSM shall be centered to the artificial mouth at a horizontal axis distance of 50 mm ±5 mm (2 in. ±0.2 in.).

(4) The audio signal from the speech quality test set shall be fed to the RSM specimen via the calibrated mouth.

(5) The measurement shall be started and the speech quality result reading reported.

Figure 13.2.1.20 Measurement Setup for Wireless RSM Audio Speech Quality Test.

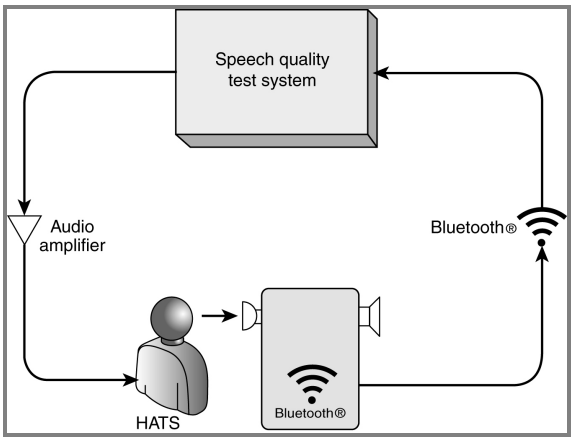

13.2.1.21 Wired RSM Speaker Audio Speech Quality Test.

The wired RSM speaker audio speech quality test shall be conducted according to the following procedure *(see Figure 13.2.1.21)*:

(1) The RSM shall be set according to the following procedure:

(2) The RSM shall be mounted in front of the artificial ear via the manufacture-provided fixture.

(3) The wired RSM speaker shall be centered to the artificial ear at a horizontal distance of 50 mm ±5 mm (2 in. ±0.2 in.).

(4) The output level of the speech quality test shall be set to provide a 2.8 VRMS nominal signal to the speaker microphone.

(5) The input sensitivity of the speech quality analyzer shall be set to the level of the artificial ear calibration *(see 13.2.1.11)*.

(6) The measurement shall be started and the speech quality result reading reported.

Figure 13.2.1.21 Measurement Setup for Wired RSM Speaker Audio Speech Quality Test.

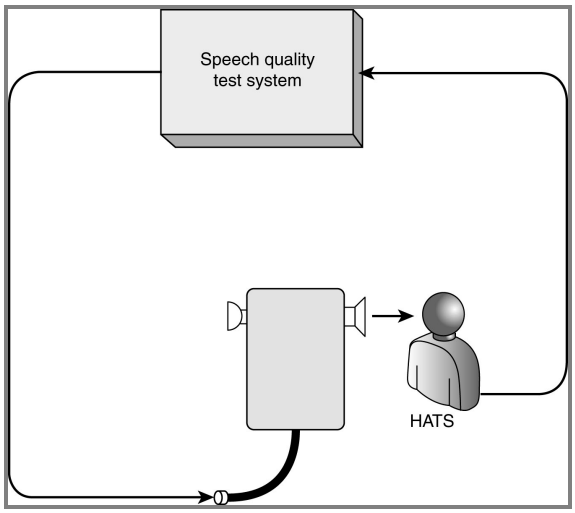

13.2.1.22 Wireless RSM Speaker Audio Speech Quality Test.

The wireless RSM speaker audio speech quality test shall be conducted in accordance with the following procedure *(see Figure 13.2.1.22)*:

(1) The RSM shall be set according to the following procedure:

(2) The RSM shall be mounted in front of the artificial ear via the manufacturer-provided fixture.

(3) The wireless RSM speaker shall be centered to the artificial ear at a horizontal distance of 50 mm ±5 mm (2 in. ±0.2 in.).

(4) The output level of the speech quality test shall be set to provide 80 percent Bluetooth® modulation to the speaker microphone.

(5) The input sensitivity of the speech quality analyzer shall be set to the level of the artificial ear calibration *(see 13.2.1.11)*.

(6) The measurement shall be started and the speech quality result reported.

Figure 13.2.1.22 Measurement Setup for Wireless RSM Speaker Audio Speech Quality Test.

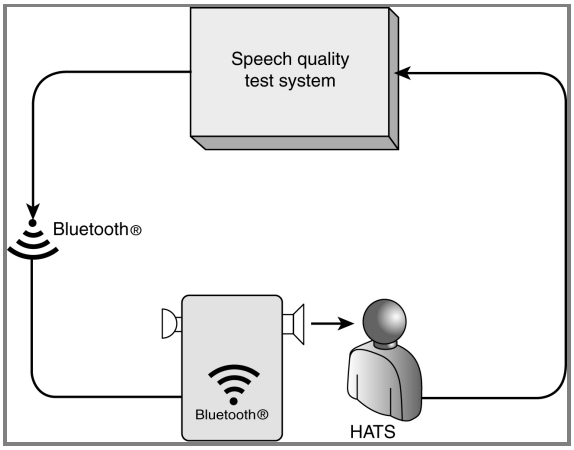

13.2.2 Report.

The speech quality result for each audio configuration shall be recorded and reported.

13.2.3 Interpretation.

13.2.3.1

Pass or fail performance shall be determined for each specimen in each audio configuration.

13.2.3.2

Failure of one or more specimens shall constitute failing performance.

13.3 Heat and Immersion Leakage Resistance.

13.3.1 Application.

This test method shall apply to all devices.

13.3.2 Samples.

13.3.2.1

Samples shall be complete devices.

13.3.2.2

Samples shall be conditioned as specified in 13.1.2.

13.3.3 Specimens.

13.3.3.1

Specimens for testing shall be complete devices.

13.3.3.2

A minimum of three specimens shall be tested.

13.3.3.3

Specimens shall be set as specified in 13.1.1.7.

13.3.3.4

Specimens shall be tested in accordance with 13.3.5 and 13.3.6.

13.3.4 Apparatus.

13.3.4.1

A test oven having minimum dimensions of 915 mm depth × 915 mm width × 1220 mm height (36 in. depth × 36 in. width × 48 in. height) shall be provided.

13.3.4.1.1

The test oven shall have an airflow rate of 38 m/min to 76 m/min (125 ft/min to 250 ft/min) at the standard temperature and pressure of 22°C (72°F) at 1 atmosphere measured at the center point of the oven.

13.3.4.1.2

A test thermocouple shall be positioned so that it is level with the horizontal centerline of a mounted specimen.

13.3.4.2

A test water container capable of covering the uppermost point of the specimen with a depth of 1.5 m (4.9 ft) of water shall be provided.

13.3.4.2.1

The water container shall maintain the devices at that depth.

13.3.4.2.2

The water temperature shall be 22°C ±3°C (72°F ±5°F).

13.3.5 Test Procedure 1.

13.3.5.1 Test Oven.

13.3.5.1.1

Specimens shall be placed in a test oven that has been preheated to 177°C, +5/−0°C (350°F, +10/−0°F).

13.3.5.1.2

Test exposure time of 15 minutes shall begin.

13.3.5.2 Specimen Removal.

13.3.5.2.1

After the test exposure time of 15 minutes, the specimens shall be removed from the oven and within 30 seconds immersed in the test water container for 15 minutes.

13.3.5.2.2

After 15 minutes, the specimens shall be removed from the test water container and wiped dry.

13.3.5.3

Specimens shall be subject to 13.3.5.1 and 13.3.5.2 for six complete cycles.

13.3.5.4 Water Leakage.

13.3.5.4.1

After the sixth cycle, the power source compartment of the specimens shall be opened and inspected for water leakage to determine pass or fail performance.

13.3.5.4.2

Where the device does not fail this portion of the test, the power source shall be reinstalled.

13.3.5.5

After the sixth cycle, the speech quality measurement shall be conducted as specified in Section 13.2 to determine the pass or fail performance.

13.3.5.6

Following the speech quality measurement, the specimen shall be operated to the manufacturer's instructions as specified in Sections 11.2 through 11.7 and 11.9 to determine functionality and pass or fail performance.

13.3.5.7 Specimen Testing.

13.3.5.7.1

After determining functionality, the specimen shall be tested and meet the requirements in Section 12.2.

13.3.5.7.2

The specimen shall meet the requirements as specified in Section 12.2 without degradation.

13.3.6 Test Procedure 2.

13.3.6.1 Reimmersion.

13.3.6.1.1

Following Test Procedure 1, the specimens shall be reimmersed in the test water container for an additional 5 minutes, +30/−0 seconds.

13.3.6.1.2

The power source compartment(s), if so equipped, shall be opened, and the power source shall not be installed.

13.3.6.2

After the 5-minute immersion, the specimens shall be removed from the test water container and wiped dry.

13.3.6.3

The electronic compartment(s) of the specimens shall be opened and inspected for water leakage to determine pass or fail performance.

13.3.7 Report.

13.3.7.1

The speech quality result measured after the heat and immersion leakage test shall be recorded and reported.

13.3.7.2

The functionality of the specimens shall be recorded and reported.

13.3.7.3

The requirements in Section 12.2 shall be tested, recorded, and reported.

13.3.8 Interpretation.

13.3.8.1

Pass or fail performance shall be determined for each specimen.

13.3.8.2

Failure of one or more specimens shall constitute failing performance.

13.4 Vibration Test.

13.4.1 Application.

This test method shall apply to all devices.

13.4.2 Samples.

13.4.2.1

Samples shall be complete devices.

13.4.2.2

Samples shall be conditioned as specified in 13.1.2.

13.4.3 Specimens.

13.4.3.1

Specimens for testing shall be complete devices.

13.4.3.2

A minimum of three specimens shall be tested.

13.4.3.3

Specimens shall be set as specified in 13.1.1.7.

13.4.3.4

Specimens shall be conditioned at a temperature of 22°C ±3°C (72°F ±5°F), and a relative humidity of 50 percent ±25 percent, for at least 4 hours.

13.4.3.5

Specimens shall be tested within 5 minutes after removal from conditioning.

13.4.4 Apparatus.

13.4.4.1

Product shall be tested on a typical package tester within the compartments specified in 13.4.4.2 through 13.4.4.4.

13.4.4.2

Compartments shall be set up as specified in Figure 13.4.4.2(a) and Figure 13.4.4.2(b).

Figure 13.4.4.2(a) Vibration Table Compartments — Top View (Not to Scale).

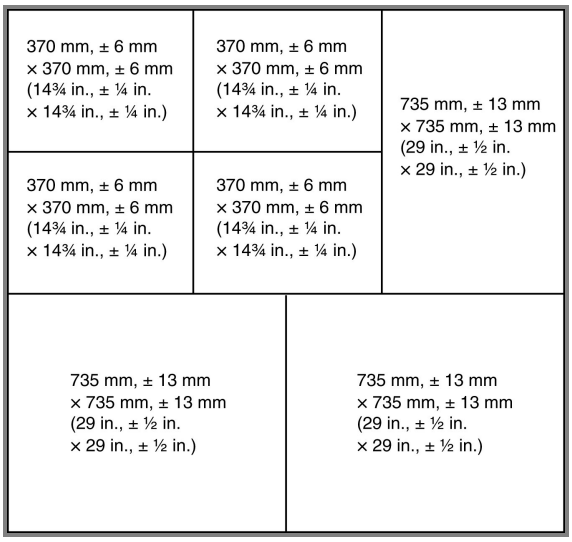

Figure 13.4.4.2(b) Vibration Table Compartments — Side View (Not to Scale).

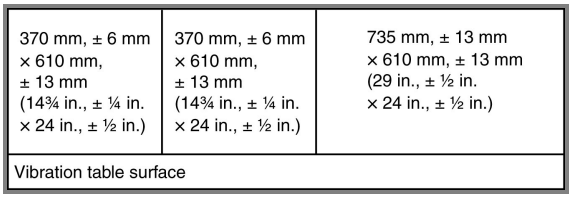

13.4.4.2.1

The sides and the base of the compartments shall be constructed of nominal 6 mm (¼ in.) stainless steel.

13.4.4.2.2

The top of the compartments shall remain open.

13.4.4.2.3

There shall be no burrs, sharp edges, surface discontinuities, or fasteners on the internal surfaces of the holding boxes.

13.4.4.3

The large compartments shall encase the complete devices that are larger than 5161 mm^2 (8 $in.^2$).

13.4.4.4

The small compartments shall encase the complete devices that are smaller than 5161 mm^2 (8 $in.^2$).

13.4.5 Procedure.

13.4.5.1

Test specimens shall be placed unrestrained in the compartments specified in 13.4.4.2.

13.4.5.2

Test specimens shall not be tied down.

13.4.5.3

The basic movement of the bed of the test table shall be a 25 mm orbital path such as can be obtained on a standard package tester operating in synchronous mode at 250 rpm ±5 rpm.

13.4.5.4

The test duration shall be 3 hours.

13.4.5.5

The speech quality measurement shall be conducted as specified in Section 13.2 to determine pass or fail performance.

13.4.5.6

Following the speech quality measurement, the specimen shall be operated to the manufacturer's instructions as specified in Sections 11.2 through 11.7 and 11.9 to determine functionality and pass or fail performance.

13.4.5.7

Specimens shall be operated according to the manufacturer's instructions to determine functionality for data logging as specified in Section 11.~~16~~ 19 to determine pass or fail performance.

13.4.5.8

After determining functionality, the specimen shall be tested and meet the requirements in Section 12.2.

13.4.6 Report.

13.4.6.1

The speech quality result measured after the vibration resistance test shall be recorded and reported.

13.4.6.2

The functionality of the specimens shall be recorded and reported.

13.4.6.3

The requirements in Section 12.2 shall be tested, recorded, and reported.

13.4.7 Interpretation.

13.4.7.1

Pass or fail performance shall be determined for each specimen.

13.4.7.2

Failure of one or more specimens shall constitute failing performance for this test.

13.5 Impact Acceleration Resistance Test.

13.5.1 Application.

This test method shall apply to all devices.

13.5.2 Samples.

13.5.2.1

Samples shall be complete devices.

13.5.2.2

Samples shall be conditioned as specified in 13.1.2.

13.5.3 Specimens.

13.5.3.1

Specimens for testing shall be complete devices.

13.5.3.2

A minimum of three specimens shall be tested.

13.5.3.3

Specimens shall be set as specified in 13.1.1.7.

13.5.4 Procedure.

13.5.4.1

Three specimens of product shall be subjected to a series of impact acceleration tests.

13.5.4.1.1

One test specimen for ambient temperature conditioning shall be exposed to a temperature of 22°C ±3°C (72°F ±5°F), for at least 4 hours.

13.5.4.1.2

One test specimen for cold temperature conditioning shall be exposed to a temperature of −20°C ±1°C (−4°F ±2°F), for at least 4 hours.

13.5.4.1.3

One test specimen for elevated temperature conditioning shall be exposed to a temperature of 71°C ±1°C (160°F ±2°F) for at least 4 hours.

13.5.4.2

Each product tested shall be complete with power source.

13.5.4.3 Postconditioning.

13.5.4.3.1

After conditioning, product shall be turned to the “on” position.

13.5.4.3.2

Testing shall begin within 30 seconds of removal from conditioning.

13.5.4.4

Following each conditioning, the product shall be dropped a total of eight times from a distance of 3 m (9.8 ft) onto a concrete surface so that impact is on each face and on one corner and one edge of the product.

13.5.4.5

The entire series of drops shall be completed within 10 minutes of removal from conditioning.

13.5.4.6

Specimens shall be visually evaluated to determine that the device enclosure has not incurred damage that affects normal operation or enclosure integrity.

13.5.4.7

The speech quality measurement shall be conducted as specified in Section 13.2 to determine pass or fail performance.

13.5.4.8

Following the speech quality measurement, the specimen shall be operated to the manufacturer’s instructions as specified in Sections 11.2 through 11.7 and 11.9 to determine functionality and pass or fail performance.

13.5.4.9

Specimens shall be operated according to the manufacturer’s instructions to determine functionality for data logging as specified in Section 11.~~16~~ 19 and pass or fail performance.

13.5.4.10

After determining functionality, the specimen shall be tested and meet the requirements in Section 12.2.

13.5.5 Report.

13.5.5.1

The speech quality result measured after the accelerated impact resistance test shall be recorded and reported.

13.5.5.2

The functionality of the specimens shall be recorded and reported.

13.5.5.3

The requirements in Section 12.2 shall be tested, recorded, and reported.

13.5.6 Interpretation.

13.5.6.1

Pass or fail performance shall be determined for each specimen.

13.5.6.2

Failure of one or more specimens shall constitute failing performance for this test.

13.6 Corrosion Test.

13.6.1 Application.

This test method shall apply to all devices.

13.6.2 Samples.

Samples shall be complete devices.

13.6.3 Specimens.

13.6.3.1

Specimens for testing shall be complete devices.

13.6.3.2

A minimum of three specimens shall be tested.

13.6.3.3

Specimens shall be set as specified in 13.1.1.7.

13.6.3.4

Specimens shall be conditioned at a temperature of 22°C ±3°C (72°F ±5°F), and a relative humidity of 50 percent ±25 percent, for at least 4 hours.

13.6.3.5

Specimens shall be tested within 5 minutes after removal from conditioning.

13.6.4 Procedure.

13.6.4.1 Test Parameters.

13.6.4.1.1

Specimens shall be tested in accordance with ASTM B117, *Standard Practice for Operating Salt Spray (Fog) Apparatus.*

13.6.4.1.2

Salt spray shall be 5 percent saline solution.

13.6.4.1.3

Test exposure shall be for 48 hours, +30/−0 minutes.

13.6.4.1.4

The chamber shall be stabilized at a temperature of 35°C ±3°C (95°F ±5°F).

13.6.4.2

Specimens shall be placed in the chamber in the typical operating position as used by first responders, as specified by the manufacturer.

13.6.4.3

At the conclusion of the salt spray period, specimens shall be stored in an environment of 22°C ±3°C (72°F ±5°F) at 50 percent ±5 percent relative humidity for a minimum of 48 hours.

13.6.4.4

Following the conditioning period, specimens shall be tested within 60 seconds of removal from conditioning.

13.6.4.5

The speech quality measurement shall be conducted as specified in Section 13.2 to determine pass or fail performance.

13.6.4.6

The specimen shall be operated to the manufacturer's instructions as specified in Sections 11.2 through 11.7 and 11.9 to determine functionality and pass or fail performance.

13.6.4.7

After determining functionality, the specimen shall be tested and meet the requirements specified in Section 12.2.

13.6.5 Report.

13.6.5.1

The speech quality result measured after the corrosion test shall be recorded and reported.

13.6.5.2

The functionality of the specimens shall be recorded and reported.

13.6.5.3

The requirements in Section 12.2 shall be tested, recorded, and reported.

13.6.6 Interpretation.

13.6.6.1

Pass or fail performance shall be determined for each specimen.

13.6.6.2

Failure of one or more specimens shall constitute failing performance for this test.

13.7 Display Surface Abrasion Test.

13.7.1 Application.

This test shall apply to all devices.

13.7.2 Samples.

Samples shall be complete display surfaces or representative plaques from devices.

13.7.3 Specimens.

13.7.3.1

Specimens for testing shall be complete devices' display surfaces or representative plaques.

13.7.3.2

Four specimens shall be taken.

13.7.3.3

One of the specimens shall be the setup specimen.

13.7.3.4

The test specimen shall include all of the following criteria:

(1) The specimen shall be a square measuring 50 mm × 50 mm (2 in. × 2 in.).

(2) At least 38 mm (1½ in.) of the 50 mm × 50 mm (2 in. × 2 in.) square shall be taken from the display surface.

13.7.3.5

Each of the specimens shall be cleaned in the following manner:

(1) The specimen shall be rinsed with clean tap water.

(2) The specimen shall be washed with a solution of nonionic/low-phosphate detergent and water using a clean, soft gauze pad.

(3) The specimen shall be rinsed with deionized water.

(4) The specimen shall be blown dry with clean compressed air or nitrogen.

13.7.3.6

Samples shall be conditioned as specified in 13.1.2.

13.7.3.7

Specimens shall be tested within 5 minutes after removal from conditioning.

13.7.4 Apparatus.

The test apparatus shall be constructed in accordance with Figure 13.7.4(a) and Figure 13.7.4(b).

Figure 13.7.4(a) Lens Abrasion Tester.

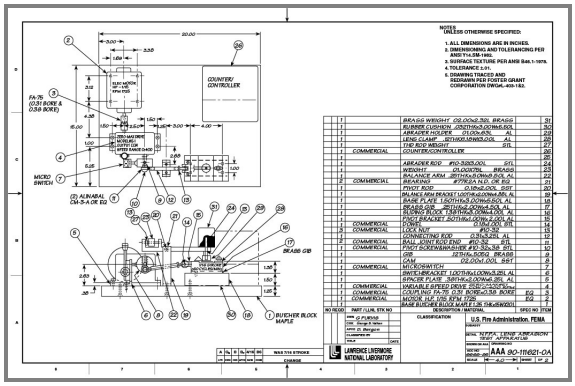

Figure 13.7.4(b) Lens Abrasion Tester (Details).

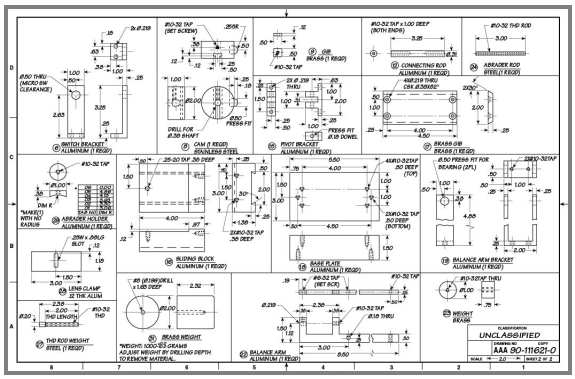

13.7.5 Procedure.

13.7.5.1

The haze of the specimen shall be measured using a haze meter in accordance with ASTM D1003, *Standard Test Method for Haze and Luminous Transmittance of Transparent Plastics,* and recorded with the following additions:

(1) The haze shall be measured in the middle 2 mm^2 of the specimen.

(2) The specimen shall be repositioned to achieve the maximum haze value within the area defined in 13.7.5.1(1).

(3) The haze meter shall have a specified aperture of 22 mm.

(4) The haze meter shall have a visual display showing 0.1 percent resolution.

(5) The haze meter shall be calibrated before and after each day's use following procedures specified in ASTM D1003, *Standard Test Method for Haze and Luminous Transmittance of Transparent Plastics*.

13.7.5.2 Placement.

13.7.5.2.1

The setup specimen shall be placed cover side up in the test apparatus specimen holder.

13.7.5.2.2

The specimen holder shall be configured with a flat surface under the lens or with an inner radius support.

13.7.5.3 Cylinder.

13.7.5.3.1

The pad holder shall consist of a cylinder 9.5 mm (0.4 in.) high and 25 mm (1 in.) in diameter with a radius of curvature equal to the radius of curvature of the outside of the lens in the display area ±0.25 diopter.

13.7.5.3.2

This cylinder shall be rigidly affixed to the stroking arm by a #10-32 UNF threaded rod.

13.7.5.4

The pad shall be a Blue Streak M306M wool felt polishing pad 23 mm (0.9 in.) in diameter.

13.7.5.5 Abrasive Disc.

13.7.5.5.1

The abrasive disc shall be made from 3M Part Number 7415, wood finishing pad.

13.7.5.5.2

A disc 23 mm (0.9 in.) in diameter shall be cut from the abrasive sheet.

13.7.5.5.3

The marked side of the disc shall be placed against the pad.

13.7.5.5.4

Care shall be exercised to maintain this orientation for each abrasive disc throughout the testing.

13.7.5.6 Stroking Arm.

13.7.5.6.1

The pad holder, pad, and abrasive disc shall be installed on the stroking arm.

13.7.5.6.2

The stroking arm shall be leveled to ±3 degrees by adjusting the threaded pin.

13.7.5.6.3

The pin shall be secured to prevent rotation of the pad holder.

13.7.5.6.4

The axis of curvature of the pad holder shall be coincident with the axis of curvature of the lens.

13.7.5.6.5

The stroking arm shall be counterbalanced with the pad holder, pad, and abrasive disc in place.

13.7.5.7

The set-up specimen shall be replaced with one of the three specimens to be tested.

13.7.5.8

A 1000 g ±5 g (2.7 lb ±0.16 oz) test weight shall be installed on the pin above the test sample.

13.7.5.9

The test shall be run for 200 cycles ±1 cycle with one cycle consisting of a complete revolution of the eccentric wheel.

13.7.5.10 Stroke.

13.7.5.10.1

The length of stroke shall be 14 mm (½ in.), producing a pattern 38 mm (1½ in.) long.

13.7.5.10.2

The frequency of the stroke shall be 60 cycles per minute ±1 cycle per minute.

13.7.5.10.3

The center of the stroke shall be within ±2 mm (±0.08 in.) of the center of the specimen.

13.7.5.11 Specimen Removal.

13.7.5.11.1

The specimen shall be removed and cleaned following the test procedure.

13.7.5.11.2

The abrasive disc shall be discarded.

13.7.5.12

The haze of the sample shall be measured following the test procedure.

13.7.5.13

The delta haze shall be calculated by subtracting the initial haze from the final haze.

13.7.5.14

The testing steps specified in 13.7.5.7 through 13.7.5.13 shall be repeated two times with a new sample and abrasive disc each time.

13.7.6 Report.

The three delta haze values shall be averaged, recorded, and reported.

13.7.7 Interpretation.

The average delta haze shall be evaluated to determine pass or fail.

13.8 High-Temperature Functionality Test.

13.8.1 Application.

This test method shall apply to all devices.

13.8.2 Samples.

13.8.2.1

Samples shall be complete devices.

13.8.2.2

Samples shall be conditioned as specified in 13.1.2.

13.8.3 Specimens.

13.8.3.1

Specimens for testing shall be complete devices.

13.8.3.2

A minimum of three specimens shall be tested.

13.8.3.3

Specimens shall be set as specified in 13.1.1.7.

13.8.3.4

Samples shall be conditioned as specified in 13.1.2.

13.8.3.5

Specimens shall be tested within 5 minutes after removal from conditioning.

13.8.4 Apparatus.

The test oven shall be as specified in ISO 17493, *Clothing and equipment for protection against heat — Test method for convective heat resistance using a hot air circulating oven.*

13.8.5 Procedure.

13.8.5.1

Testing shall be performed in accordance with ISO 17493, *Clothing and equipment for protection against heat — Test method for convective heat resistance using a hot air circulating oven,* using the following parameters:

(1) A test fixture capable of accommodating the device being tested shall be used.

(2) The test temperature shall be 260°C, +6/−0°C (500°F, +10/−0°F).

(3) Specimens shall be mounted in the “as worn” position on a test fixture.

(4) Specimens shall not touch any oven surface.

(5) The test fixture shall not degrade the oven recovery time.

(6) The test fixture shall be designed to allow the specimens to be attached in the same configuration as the specimens’ mounting assembly attaches to the specimens.

13.8.5.2

The test fixture with the specimen attached shall be placed in the test oven perpendicular with the front surface facing perpendicular to the airflow of the oven.

13.8.5.3

The specimen shall be set to the “on” mode.

13.8.5.4 Position.

13.8.5.4.1

There shall be no obstructions between the specimen and the airflow.

13.8.5.4.2

The test fixture shall position the specimen equidistant from all interior oven surfaces.

13.8.5.5 Oven Door.

13.8.5.5.1

The test oven door shall not remain open more than 15 seconds.

13.8.5.5.2

The air circulation shall be shut off while the door is open and turned on when the door is closed.

13.8.5.6 Recovery Time.

13.8.5.6.1

The total test oven recovery time shall not exceed 30 seconds.

13.8.5.6.2

The thermocouple reading shall remain at 260°C, +6/−0°C (500°F, +10/−0°F) for the duration of the test.

13.8.5.7 Exposure Time.

13.8.5.7.1

The test specimen, mounted as specified, shall be exposed in the test oven for 5 minutes, +15/−0 seconds.

13.8.5.7.2

The test exposure time shall begin when the test thermocouple recovers to 260°C, +6/−0°C (500°F, +10/−0°F).

13.8.5.8

Within 30 seconds of removal from the oven, the speech quality measurement shall be initiated as specified in Section 13.2 to determine pass or fail performance.

13.8.5.9

~~Initiation of the specimen's functional evaluation shall occur in accordance with~~ Following the speech quality measurement, the specimen shall be operated to the manufacturer's instructions as specified in Sections 11.2 through 11.7 and ~~the manufacturer's instructions~~ 11.9 to determine ~~the~~ functionality and pass or fail performance~~- requirements immediately following speech quality testing~~ .

13.8.5.10

Specimens shall operate according to the manufacturer's instructions to determine functionality for data logging as specified in Section 11.~~16~~ 19 and pass or fail performance.

13.8.5.11

After determining functionality, the specimen shall be tested and meet the requirements specified in Section 12.2.

13.8.6 Report.

13.8.6.1

The speech quality result measured after the heat resistance test shall be recorded and reported.

13.8.6.2

The functionality of the specimens shall be recorded and reported.

13.8.6.3

The requirements in Section 12.2 shall be tested, recorded, and reported.

13.8.7 Interpretation.

13.8.7.1

Pass or fail performance shall be determined for each specimen.

13.8.7.2

Failure of one or more specimens shall constitute failing performance for this test.

13.9 Heat and Flame Test.

13.9.1 Application.

This test method shall apply to all devices.

13.9.2 Samples.

Samples shall be complete devices.

13.9.3 Specimens.

13.9.3.1

Specimens for testing shall be complete devices.

13.9.3.2

A minimum of three specimens shall be tested.

13.9.3.3

Specimens shall be set as specified in 13.1.1.7.

13.9.3.4

Samples shall be conditioned as specified in 13.1.2.

13.9.3.5

Specimens shall be tested within 5 minutes after removal from conditioning.

13.9.4 Apparatus.

13.9.4.1

Specimens shall be attached to the front or rear of the test mannequin by the retention system, in accordance with the manufacturer’s instructions, by means of a loop, belt, or other means, on the outside or over the mannequin protective clothing.

13.9.4.2 Instructions.

13.9.4.2.1

Specimens shall be attached to the front or rear of the test mannequin in accordance with the RF/RSM manufacturer’s instructions, by means of a loop, belt, SCBA strap, or other means, on the outside or over the mannequin’s protective clothing.

13.9.4.2.2

Specimens shall be mounted on the mannequin in accordance with the RF/RSM manufacturer's instructions to simulate correct wearing position.

13.9.4.3 Heat and Flame Test Apparatus.

13.9.4.3.1

The heat and flame test apparatus shall be as specified in Figure 13.9.4.3.1(a) and Figure 13.9.4.3.1(b).

Figure 13.9.4.3.1(a) Heat and Flame Test Apparatus: Top View.

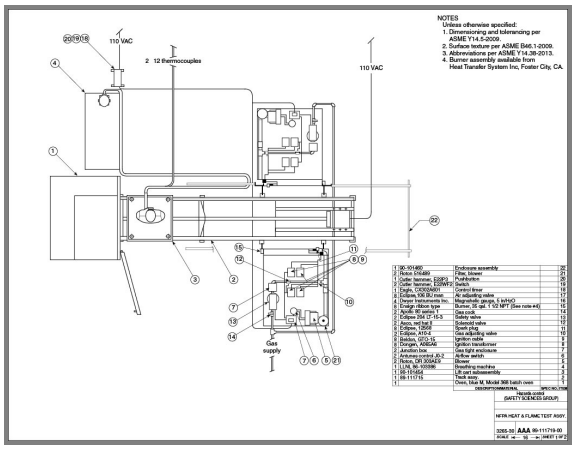

Figure 13.9.4.3.1(b) Heat and Flame Test Apparatus: Side View.

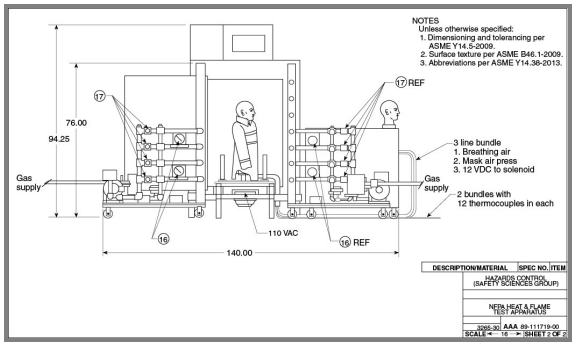

13.9.4.3.2

The heat and flame test apparatus shall not be supplied by the device manufacturer.

13.9.4.4 Test Oven.

13.9.4.4.1

The test oven shall be a horizontal forced-circulating-air oven with an internal velocity of 61 m/min (200 ft/min).

13.9.4.4.2

The test oven shall have minimum dimensions of 915 mm depth × 915 mm width × 1220 mm height (36 in. × 36 in. × 48 in.).

13.9.5 Procedure.

13.9.5.1

For calibration prior to the heat and flame test, the calibration mannequin shown in Figure 13.9.4.3.1(b) shall be exposed to direct flame contact for 10 seconds using the heat and flame test apparatus.

13.9.5.2

All peak temperature readings shall be within a temperature range of 815°C to 1150°C (1500°F to 2102°F).

13.9.5.3

The average mean of all peak temperature readings shall not be higher than 950°C (1742°F).

13.9.5.4

The test oven recovery time, after the door is closed, shall not exceed 60 seconds.

13.9.5.5 Temperature.

13.9.5.5.1

Specimens mounted on the test fixture shall first be placed in the test oven, which has been preheated to 95°C ±2°C (203°F ±5°F), for 15 minutes, +15/−0 seconds.

13.9.5.5.2

The test exposure time of 15 minutes shall begin after the door is closed and the oven temperature recovers to 95°C (203°F).

13.9.5.6

At the completion of the 15-minute exposure at 95°C ±2°C (203°F ±5°F), the specimen mounted on the test fixture shall be moved out of the oven and into the center of the burner array.

13.9.5.7 Flame Contact.

13.9.5.7.1

The product shall then be exposed to direct flame contact for 10 seconds, +¼/−0 seconds.

13.9.5.7.2

This exposure shall begin within 20 seconds of the product being removed from the test oven.

13.9.5.8

The speech quality measurement shall be conducted as specified in Section 13.2 to determine pass or fail performance.

13.9.5.9

Following the speech quality measurement, the specimen shall be operated to the manufacturer's instructions as specified in Sections 11.2 through 11.7 and 11.9 to determine functionality and pass or fail performance.

13.9.5.10

After determining functionality, the specimen shall be tested and meet the requirements specified in Section 12.2.

13.9.6 Report.

13.9.6.1

Any afterflame of the test specimen exceeding 2.2 seconds shall be recorded and reported.

13.9.6.2

Anything falling from the test specimen shall be recorded and reported.

13.9.6.3

Any test specimen falling from the mounted position shall be recorded and reported.

13.9.6.4

The speech quality result measured after the heat and flame resistance test shall be recorded and reported.

13.9.6.5

The functionality of the specimens as specified in Sections 11.2 through 11.7 and 11.9 shall be recorded and reported.

13.9.6.6

The requirements of Section 12.2 shall be tested, recorded, and reported.

13.9.7 Interpretation.

13.9.7.1

Pass or fail performance shall be determined for each specimen.

13.9.7.2

Failure of one or more specimens shall constitute failing performance for this test.

13.9.7.3

Any test specimen exceeding 2.2 seconds of afterflame shall constitute failing performance.

13.9.7.4

Any test specimen having parts or other items falling off shall constitute failing performance.

13.9.7.5

Any test specimen falling from its mounted position shall constitute failing performance.

13.9.7.6

Specimens shall be operated according to the manufacturer's instructions to determine functionality for data logging as specified in Section 11.16 and pass or fail performance.

13.10 Product Label Durability Test.

13.10.1 Application.

This test method shall apply to all product labels.

13.10.2 Samples.

Samples shall be complete devices.

13.10.3 Specimens.

13.10.3.1

Specimens for testing shall be complete devices with product labels attached.

13.10.3.2

A minimum of three specimens shall be tested.

13.10.3.3

Samples shall be conditioned as specified in 13.1.2.

13.10.4 Procedure.

13.10.4.1

Specimens with all product labels attached shall be subjected to the tests specified in Sections 13.3, 13.6, and 13.8.

13.10.4.2

After each test, the specimen product labels shall be examined at a distance of 305 mm (12 in.) by the unaided eye with 20/20 vision or vision corrected to 20/20.

13.10.4.3

The product labels shall be permitted to be wiped clean with an untreated cloth prior to being examined.

13.10.5 Report.

The legibility of each product label shall be recorded and reported.

13.10.6 Interpretation.

Any specimen failing the test shall constitute failing performance.

13.11 Cable Pullout Test.

13.11.1 Application.

This test method shall apply to devices and any associated assemblies with interconnecting wiring.

13.11.2 Samples.

Samples shall be complete devices.

13.11.3 Specimens.

13.11.3.1

Specimens for testing shall be complete devices with any associated assemblies with interconnecting wiring.

13.11.3.2

A minimum of three specimens shall be tested.

13.11.3.3

Specimens shall be set as specified in 13.1.1.7.

13.11.3.4

Samples shall be conditioned as specified in 13.1.2.

13.11.4 Apparatus.

A mass of known weight with the means for attachment to wiring shall be provided.

13.11.5 Procedure.

13.11.5.1

Samples shall be conditioned as specified in 13.1.4.

13.11.5.2

A force of 156 N, +9/−0 N (35 lbf, +2/−0 lbf) shall be applied at a rate of 2.0 in./min (±0.5 in./min), in an axial direction to the wiring of the specimen tested.

13.11.5.3

The ~~functionality of the specimens~~ specimen shall be operated to the manufacturer's instructions as specified in Sections 11.2 through 11.7 ~~shall be recorded~~ and ~~reported.~~ 11.9 to determine functionality and pass or fail performance.

13.11.6 Report.

13.11.6.1

Observations of the nonseparation and separation of interconnecting wiring shall be recorded and reported.

13.11.6.2

The speech quality measurement shall be conducted as specified in Section 13.2 to determine pass or fail performance.

13.11.6.3

~~Following the speech quality measurement, the specimen shall be operated to the manufacturer's instructions~~ The functionality of the specimens as specified in Sections 11.2 through 11.7 ~~to determine functionality and pass or fail performance.~~ and 11.9 shall be recorded and reported.

13.11.7 Interpretation.

13.11.7.1

Pass or fail performance shall be determined for each specimen.

13.11.7.2

Failing performance of one or more specimens shall constitute failing performance for this test.

13.12 Case Integrity Test.

13.12.1 Application.

This test method shall apply to all devices.

13.12.2 Samples.

13.12.2.1

Samples shall be complete devices.

13.12.2.2

Samples shall be conditioned as specified in 13.1.2.

13.12.3 Specimens.

13.12.3.1

Specimens for testing shall be complete devices.

13.12.3.2

Specimens shall be set as specified in 13.1.1.7.

13.12.4 Procedure.

13.12.4.1

Specimens shall be subjected to a test weight of 200 kg, +2/−0 kg (442 lb, +4.4/−0 lb).

13.12.4.2

The test weight shall be applied to each of the following surfaces of the specimen case, housing, or enclosure:

(1) Right

(2) Left

(3) Front

(4) Back

13.12.4.3

The test weight shall be placed so as to avoid impact loading.

13.12.4.4

The test weight shall remain on each surface of the specimen case for 1 minute, +15/−0 seconds.

13.12.4.5

After removal of the test weight, each surface of the specimen case, housing, and enclosure shall be examined for damage.

13.12.5

The speech quality measurement shall be conducted as specified in Section 13.2 to determine pass or fail performance.

13.12.6

Following the speech quality measurement, the specimen shall be operated to the manufacturer's instructions as specified in Sections 11.2 through 11.7 and 11.9 to determine functionality and pass or fail performance.

13.12.7

After determining functionality, the specimen shall be tested and meet the requirements specified in Section 12.2.

13.12.8 Report.

13.12.8.1

The speech quality result measured after the case integrity test shall be recorded and reported.

13.12.8.2

The functionality of the specimens shall be recorded and reported.

13.12.8.3

The requirements of Section 12.2 shall be tested, recorded, and reported.

13.12.9 Interpretation.

13.12.9.1

Pass or fail performance shall be determined for each specimen.

13.12.9.2

Failure of one or more specimens shall constitute failing performance for this test.

13.13 Water Drainage Test.

13.13.1 Application.

This test method shall apply to all devices.

13.13.2 Samples.

13.13.2.1

Samples shall be complete devices.

13.13.2.2

Samples shall be conditioned as specified in 13.1.2.

13.13.3 Specimens.

13.13.3.1

Specimens for testing shall be complete devices.

13.13.3.2

Specimens shall be set as specified in 13.1.1.7.

13.13.3.3

A minimum of three specimens shall be tested.

13.13.4 Procedure.

13.13.4.1

Specimens shall be subjected to three water drainage tests.

13.13.4.1.1

The first test shall have the specimens positioned with the speaker oriented in the position it is intended to be worn, in accordance with the manufacturer's instructions.

13.13.4.1.2

The second test shall have the specimens positioned with the speaker oriented horizontally and facing up.

13.13.4.1.3

A third test shall have the specimen positioned where the speaker is oriented in a position that will retain the greatest volume of water.

13.13.4.2

Water shall be introduced into all openings, indentations, and grilles of the specimens until water overflows from each such opening, indentation, and grille.

13.13.4.3

The filling method shall ensure that no air bubbles remain in any of the openings, indentations, and grilles.

13.13.4.4

The speech quality result shall be measured and recorded starting at the 60-second mark, +5/−0 seconds, to determine pass or fail performance.

13.13.5 Report.

13.13.5.1

The speech quality result measured after the water drainage test shall be recorded and reported.

13.13.5.2

The functionality of the specimens as specified in Sections 11.2 through 11.7 and 11.9 shall be recorded and reported.

13.13.6 Interpretation.

13.13.6.1

Pass or fail performance shall be determined for each specimen.

13.13.6.2

Failure of one or more specimens shall constitute failing performance for this test.

13.14 Tumble — Vibration Test.

13.14.1 Application.

This test method shall apply to all RF devices and RSMs.

13.14.2 Samples.

13.14.2.1

Samples shall be complete RF devices and RSMs.

13.14.2.2

Samples shall be conditioned as specified in 13.1.2.

13.14.3 Specimens.

13.14.3.1

Specimens for testing shall be complete RF devices and RSMs.

13.14.3.2

A minimum of three specimens shall be tested.

13.14.4 Apparatus.

The tumble test apparatus shall be as specified in Figure 13.14.4.

Figure 13.14.4 Tumble Test Apparatus.

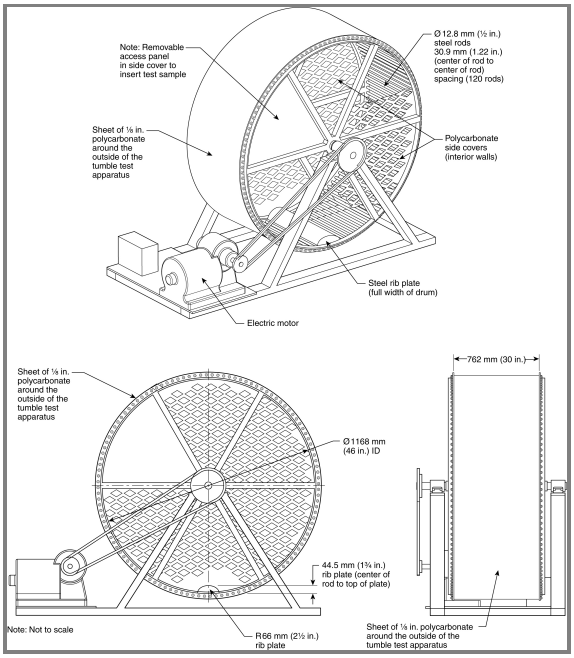

13.14.5 Procedure.

13.14.5.1

The test specimens shall be placed unrestrained in the tumbling apparatus.

13.14.5.2

Only one specimen shall be tested at a time.

13.14.5.3

The tumbling apparatus shall be run at a speed of 15 rpm ±1 rpm.

13.14.5.4

The test shall be run for a duration of 3 hours, +5/−0 minutes.

13.14.5.5

Specimens shall be operated according to the manufacturer's instructions to determine functionality as specified in 12.1.1 and pass or fail performance.

13.14.5.6

Upon completion of the test duration, specimens shall be operated according to the manufacturer's instructions to determine functionality for data logging as specified in Section 11.19 and pass or fail performance.

13.14.5.7

The speech quality level shall be measured as specified in 12.1.1 to determine pass or fail performance.

13.14.6 Report.

13.14.6.1

The specimen speech quality level shall be measured, recorded, and reported.

13.14.6.2

The functionality of the specimens shall be recorded and reported.

13.14.6.3

The requirements in Section 12.2 shall be tested, recorded, and reported.

13.14.7 Interpretation.

13.14.7.1

Pass or fail performance shall be determined for each specimen.

13.14.7.2

Any one specimen failing the test shall constitute failing performance.

13.15 TIA Transmit Power.

13.15.1 Application.

This test method shall apply to all RF devices.

13.15.2 Samples.

13.15.2.1

Samples shall be complete devices.

13.15.2.2

Samples shall be conditioned as specified in 13.1.2.

13.15.3 Specimens.

13.15.3.1

Specimens for testing shall be complete devices.

13.15.3.2

A minimum of three specimens shall be tested.

13.15.3.3

Specimens shall be tested within 5 minutes after removal from conditioning.

13.15.4 Procedure.

Specimens shall be tested for carrier output power in the analog mode as specified in 2.2.1 of TIA-603-E, *Land Mobile FM or PM — Communications Equipment — Measurement and Performance Standards*.

13.15.5 Report.

The carrier output power and the RF power output shall be recorded and reported.

13.15.6 Interpretation.

13.15.6.1

Pass or fail performance shall be determined for each specimen.

13.15.6.2

Failing performance of one or more specimens shall constitute failing performance for this test.

13.16 TIA Carrier Frequency Stability.

13.16.1 Application.

This test method shall apply to all RF devices.

13.16.2 Samples.

13.16.2.1

Samples shall be complete devices.

13.16.2.2

Samples shall be conditioned as specified in 13.1.2.

13.16.3 Specimens.

13.16.3.1

Specimens for testing shall be complete devices.

13.16.3.2

A minimum of three specimens shall be tested.

13.16.3.3

Specimens shall be tested within 5 minutes after removal from conditioning.

13.16.4 Procedure.

Specimens shall be tested for carrier frequency stability in the analog mode as specified in 2.2.2 of TIA-603-E, *Land Mobile FM or PM — Communications Equipment — Measurement and Performance Standards* .

13.16.5 Report.

The carrier frequency stability and the operating frequency accuracy shall be recorded and reported.

13.16.6 Interpretation.

13.16.6.1

Pass or fail performance shall be determined for each specimen.

13.16.6.2

Failing performance of one or more specimens shall constitute failing performance for this test.

13.17 TIA Receiver Sensitivity.

13.17.1 Application.

This test method shall apply to all RF devices.

13.17.2 Samples.

13.17.2.1

Samples shall be complete devices.

13.17.2.2

Samples shall be conditioned as specified in 13.1.2.

13.17.3 Specimens.

13.17.3.1

Specimens for testing shall be complete devices.

13.17.3.2

A minimum of three specimens shall be tested.

13.17.3.3

Specimens shall be tested within 5 minutes after removal from conditioning.

13.17.4 Procedure.

Specimens shall be tested for reference sensitivity in the analog mode as specified in 2.1.4 of TIA-603-E, *Land Mobile FM or PM — Communications Equipment — Measurement and Performance Standards*.

13.17.5 Report.

The reference sensitivity (analog) shall be recorded and reported.

13.18 Power Source Performance Test.

13.18.1 Application.

This test method shall apply to all RF devices.

13.18.2 Samples.

13.18.2.1

Samples shall be complete devices.

13.18.2.2

Samples shall be conditioned as specified in 13.1.2.

13.18.3 Specimens.

13.18.3.1

Specimens for testing shall be complete devices with a fully charged battery.

13.18.3.2

A minimum of three specimens shall be tested.

13.18.4 Procedure.

13.18.4.1

The RF device shall be continuously operated for at least 8 hours on a standard-duty cycle of 10-10-80 at maximum rated transmit power.

13.18.4.2

The RF device shall be tested for carrier output power as specified in 2.2.1 of TIA-603-E, *Land Mobile FM or PM — Communications Equipment — Measurement and Performance Standards,* and RF power output as specified in 2.2.1 of TIA-102.CAAA-F, *Project 25 Digital C4FM/CQPSK Transceiver Measurement Methods*.

13.18.4.3

Transmit power shall not decrease by more than 1 dB for the first 8 hours as specified in 12.2.1.2.1.

13.18.5 Report.

13.18.5.1

The delta power shall be calculated by subtracting the final transmit power from the initial transmit power.

13.18.5.2

Delta power shall be recorded and reported.

13.18.5.3

The functionality of the specimens shall be recorded and reported.

13.18.6 Interpretation.

13.18.6.1

Pass or fail performance shall be determined for each specimen.

13.18.6.2

Failing performance of one or more specimens shall constitute failing performance for this test.

13.19 Electronic Temperature Stress Test.

13.19.1 Application.

This test method shall apply to all RF devices and RSMs .

13.19.2 Samples.

13.19.2.1

Samples shall be conditioned as specified in 13.1.2.

13.19.2.2

A minimum of three specimens shall be tested.

13.19.3 Procedure.

13.19.3.1

Each specimen shall be subjected to a series of three temperature stress tests identified as Test Procedure 1, for elevated temperature, in 13.19.4; Test Procedure 2, for low operating temperature, in 13.19.5; and Test Procedure 3, for temperature shock, in 13.19.6.

13.19.3.2 Specimens.

13.19.3.2.1

The same three specimens shall be used for all three test series.

13.19.3.2.2

Each specimen tested shall be complete with power source.

13.19.3.3 Conditions.

13.19.3.3.1

The test chamber or cabinet shall be capable of maintaining the required conditions specified in 13.19.4, 13.19.5, and 13.19.6 throughout the envelope of air surrounding the specimen being tested.

13.19.3.3.2

The required conditions shall be continuously monitored.

13.19.3.4

Following each test procedure, the specimen shall be allowed to stabilize at ambient conditions prior to proceeding to the next test procedure.

13.19.4 Test Procedure 1.

13.19.4.1

Specimens shall be placed in the test apparatus that has been stabilized at 49°C, +3/−0°C (120°F, +5/−0°F).

13.19.4.2

After 6 hours, the temperature shall be raised to 71°C, +3/−0°C (160°F, +5/−0°F) within 1 hour and maintained for 4 hours.

13.19.4.3

The temperature shall then be decreased to 49°C, +3/−0°C (120°F, +5/−0°F) within 1 hour.

13.19.4.4

This cycle shall be repeated twice.

13.19.4.5

After the second cycle, the temperature shall be raised to 71°C, +3/−0°C (160°F, +5/−0°F) for 4 hours.

13.19.4.6

Specimens shall be removed following the specified conditioning, and testing shall begin within 30 seconds or removal from conditioning.

13.19.4.7

Specimens shall be operated according to the manufacturer’s instructions to determine functionality as follows:

(1) RF device as specified in Sections 11.2 through 11.7

(2) RSM as specified in Section 11.9

13.19.4.8

The RF device shall transmit and a receiving RF device shall be used to determine pass or fail performance.

13.19.5 Test Procedure 2.

13.19.5.1

Specimens shall be placed and maintained in the test apparatus that has been stabilized at −20°C, +0/−3°C (−4°F, +0/−5°F) for a minimum of 4 hours.

13.19.5.2 Removal.

13.19.5.2.1

Specimens shall be removed following the specified conditioning.

13.19.5.2.2

Testing shall begin within 30 seconds of removal from conditioning.

13.19.5.3

Specimens shall be operated according to the manufacturer's instructions to determine functionality as follows:

(1) RF device as specified in Sections 11.2 through 11.7

(2) RSM as specified in Section 11.9

13.19.5.4

The RF device shall transmit and a receiving RF device shall be used to determine pass or fail performance.

13.19.6 Test Procedure 3.

13.19.6.1 Hot/Cold Conditioning.

13.19.6.1.1

Specimens shall be conditioned for 4 hours in the test apparatus that has been stabilized at −20°C, +0/−3°C (−4°F, +0/−5°F).

13.19.6.1.2

Specimens shall be removed from the cold condition.

13.19.6.1.3

Within 5 minutes, specimens shall be conditioned for 4 hours in another test apparatus that has been stabilized at 71°C, +3/−0°C (160°F, +5/−0°F).

13.19.6.2

The cold-to-hot cycle shall be repeated twice.

13.19.6.3 Removal.

13.19.6.3.1

Specimens shall be removed following the specified conditioning.

13.19.6.3.2

Specimen testing shall begin within 30 seconds of removal from conditioning.

13.19.6.4

Specimens shall be operated according to the manufacturer's instructions to determine functionality as follows:

(1) RF device as specified in Sections 11.2 through 11.7

(2) RSM as specified in Section 11.9

13.19.6.5

The RF device shall transmit and a receiving RF device shall be used to determine pass or fail performance.

13.19.7 Report.

The functioning of the specimens shall be recorded and reported.

13.19.8 Interpretation.

13.19.8.1

Pass or fail performance shall be determined for each specimen.

13.19.8.2

Failure of one or more specimens shall constitute failing performance for this test.

13.20 Antenna VSWR Swept Frequency Test.

13.20.1 Application.

This test method shall apply to all RF devices.

13.20.2 Samples.

13.20.2.1

Samples shall be complete devices.

13.20.2.2

Samples shall be conditioned as specified in 13.1.2.

13.20.3 Specimens.

Specimens for testing shall be the RF device antenna.

13.20.4 Apparatus.

13.20.4.1

The manufacturer shall provide a fixture to mount the antenna to facilitate the swept frequency VSWR test.

13.20.4.2

The manufacturer shall provide an N-type female connector to connect the RF cable from the meter to the fixture.

13.20.5 Procedure.

13.20.5.1 Calibration.

13.20.5.1.1

The swept frequency VSWR meter shall be calibrated by connecting the meter to the fixture and applying the calibration loads to the antenna mounting point.

13.20.5.1.2

Adapters shall be permitted to connect the calibration load to the antenna mounting point.

13.20.5.1.3

The effect of adapters on the calibration shall be ignored.

13.20.5.2

The specimen’s antenna shall be removed from the specimen and mounted in the fixture.

13.20.5.3 Configuration.

13.20.5.3.1

The swept frequency VSWR meter shall be configured for a start and stop frequency equal to the vendor-specified antenna bandwidth.

13.20.5.3.2

A minimum of 100 sample points shall be taken across the bandwidth.

13.20.5.4 VSWR Charts.

13.20.5.4.1

A baseline swept VSWR chart of the antenna shall be created before the RF device is subjected to any performance tests.

13.20.5.4.2

Subsequent swept VSWR charts shall be created after each performance test as specified.

13.20.5.4.3

These VSWR charts shall be compared to the baseline.

13.20.6 Report.

The greatest change between the baseline and subsequent test curves shall be calculated, recorded, and reported.

13.20.7 Interpretation.

13.20.7.1

Pass or fail performance shall be determined for each specimen.

13.20.7.2

Failing performance of one or more specimens shall constitute failing performance for this test.

Statement of Problem and Substantiation for Public Comment

Adding functionality check for RSMs to 11.9 requirements in various test methods, correcting references to data logging from section 11.16 to 11.19, and adding RSMs to Section 8.19 for consistency with the test matrix table

Related Item

• Editorial

Submitter Information Verification

Submitter Full Name: Benjamin Hanna
Organization: Safety Equipment Institute (SE
Street Address:
City:
State:
Zip:
Submittal Date: Fri Dec 22 09:28:18 EST 2023
Committee: FAE-ELS

Committee Statement

Committee Action: Rejected but see related SR
Resolution: SR-43-NFPA 1930-2024
Statement: Insuring the RSM is checked for functionality after the test and updating the language to be consistent with the other test methods.

Public Comment No. 29-NFPA 1930-2023 [Section No. 13.2.1.10]

13.2.1.10 Artificial Mouth.

The artificial mouth shall be calibrated as follows *(see Figure 13.2.1.10)*:

(1) The pink noise test signal from the HATS shall be equalized flat with pink noise from 100 Hz to 10 kHz to ±1dB on a ⅓ octave scale and adjusted to achieve an A-weighted sound level of 97 dBA ±0.5 dB at the mouth reference point (MRP), 50 mm ±3 mm (2 in. ±⅛ in.) from the HATS' mouth, or an inverse sine sweep from 100 Hz to 10 kHz to equalize the mouth shall be allowed.

(2) The levels for the 125 Hz octave band (the 100 Hz, 125 Hz, 160 Hz ⅓ octave bands) shall be reduced by 10 dB.

(3) The levels for the 250 Hz octave band (the 200 Hz, 250 Hz, 315 Hz ⅓ octave bands) shall be reduced by 2 dB.

(4) The speech quality test signal "Male1_1st_~~Set_8k~~ LMR .wav" shall be applied and the SPL adjusted until an average (SPL) (Leq) of 95 dBA ±0.5 dBA is achieved, over a period of time of 45 seconds ±15 seconds.

Figure 13.2.1.10 Calibration of the Artificial Mouth.

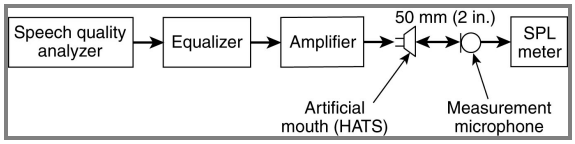

Statement of Problem and Substantiation for Public Comment

This PC is being submitted on behalf of the task group created during the First Draft Meeting consisting of Motorola, L3Harris, JVCKenwood, SEI, and Intertek. This change updates the test signal file name for consistency with other PCs that will be entered by this task group.

Related Public Comments for This Document

Related Comment	Relationship
Public Comment No. 30-NFPA 1930-2023 [New Section after 13.2.1.12]	

Related Item

• First Draft Public Inputs 38, 46, 57, 59, 60, 61, 78, 81, 84, 90

Submitter Information Verification

Submitter Full Name: Benjamin Hanna
Organization: Safety Equipment Institute (SE
Street Address:
City:
State:
Zip:
Submittal Date: Thu Dec 07 10:22:09 EST 2023
Committee: FAE-ELS

Committee Statement

Committee Action:	Rejected but see related SR
Resolution:	SR-36-NFPA 1930-2024
Statement:	This change updates the test signal file name for consistency with other second revisions.

Public Comment No. 30-NFPA 1930-2023 [New Section after 13.2.1.12]

13.2.1.12 Excitation Speech Signals

13.2.1.12.1* Four excitation speech signals, two male and two female, shall be selected by the audio analyzer as follows:

(1) Male1_1st_Set_8k.wav

(2) Male2_1st_Set_8k.wav

(3) Female1_1st_Set_8k.wav

(4) Female2_1st_Set_8k.wav

13.2.1.12.2* The following modifications shall be applied to each of the four excitation speech signals:

(1) Each file shall be high pass filtered with a 9th order Butterworth filter with a -3 dB point of 300 Hz

(2) Following filtering, each file shall be scaled to provide an active speech level (ASL) of -26 dBov according to ITU-T Recommendation P.56

(3) The files names shall be revised from "…Set_8k.wav" to "…LMR.wav" to reflect that these modifications have been applied

A.13.2.1.12.1 Speech reference files in Section 13.2.1.12.1 use the default file names for PESQ speech signals when they are obtained from an Audio Precision Speech Quality Analyzer, and are available for download from Audio Precision at www.ap.com/download/pesq-speech-waveforms/

A.13.2.1.12.2 During development of this test method, it was found that direct application of PESQ reference files in a Land Mobile Radio (LMR) conventional FM communications system resulted POLQA scores that were not representative of the voice quality perceived by human observers. Conventional FM LMR systems remove audio information below 300Hz. When the reference files are high pass filtered and level normalized, the POLQA scores more closely reflect the speech quality perceived by human observers.

Statement of Problem and Substantiation for Public Comment

This PC is being submitted on behalf of the task group created during the First Draft Meeting consisting of Motorola, L3Harris, JVCKenwood, SEI, and Intertek. Several public inputs were submitted during the first draft process which were intended to clarify how to use PESQ files with POLQA analysis, and to possibly change those files from PESQ to POLQA. The task group recommends keeping the PESQ reference files as all data from certified NFPA 1802 radios is generated from the use of these files. The changes submitted in this public comment reflect how those files are configured in order to work correctly with the POLQA analysis that is used, and provide more detail than first draft section 13.2.1.12.2(2) which states the PESQ files may be altered to work with POLQA.

Additionally, during the task group's review, we found that NFPA 1802-2021 does not actually state the

source of the files that are used, only giving the file naming convention. Because of this, an annex item has been added to document where the files may be obtained.

Related Public Comments for This Document

Related Comment	Relationship
Public Comment No. 29-NFPA 1930-2023 [Section No. 13.2.1.10]	
Public Comment No. 31-NFPA 1930-2023 [Section No. 13.2.1.12.2]	
Public Comment No. 32-NFPA 1930-2023 [Sections 13.2.1.16, 13.2.1.17, 13.2.1.18]	
Public Comment No. 33-NFPA 1930-2023 [Section No. 2.3.6]	

Related Item

- First Draft Public Inputs 38, 46, 57, 59, 60, 61, 78, 81, 84, 90

Submitter Information Verification

Submitter Full Name: Benjamin Hanna
Organization: Safety Equipment Institute (SE
Street Address:
City:
State:
Zip:
Submittal Date: Thu Dec 07 10:29:07 EST 2023
Committee: FAE-ELS

Committee Statement

Committee Action: Rejected but see related SR

Resolution: SR-35-NFPA 1930-2024

Statement: Several public inputs were submitted during the first draft process which were intended to clarify how to use PESQ files with POLQA analysis, and to possibly change those files from PESQ to POLQA. The changes submitted reflect how those files are configured in order to work correctly with the POLQA analysis that is used, and provide more detail than the first draft section 13.2.1.12.2(2) which states the PESQ files may be altered to work with POLQA. Additionally, NFPA 1930 (1802) needs to state the source of the files that are used, giving the file naming convention. Because of this, an annex item has been added to document where the files may be obtained.

Public Comment No. 31-NFPA 1930-2023 [Section No. 13.2.1.12.2]

13.2.1.12.2

Each speech quality measurement shall be recorded for each test signal as follows:

(1) Four excitation speech signals, two male and two female, as defined in 13.2.1.12, shall be selected ~~by the speech quality analyzer~~ as follows:

(2) Male1_1st_

~~Set_8k~~

(a) LMR .wav

(b) Male2_1st_

~~Set_8k~~

(a) LMR .wav

(b) Female1_1st_

~~Set_8k~~

(a) LMR .wav

(b) Female2_1st_

~~Set_8k~~

(a) LMR .wav

(3) The ~~four excitation speech signals, two male and two female, shall be permitted to be altered to meet ITU P.86 requirements for testing.~~

~~The~~

(4) _ mode in RF device and speech quality

~~analyzershall~~

(5) analyzer shall be narrowband.

(6) When using narrowband, automatic gain control in the DUT shall be disabled and level alignment enabled in the speech quality analyzer, in accordance with Sub Section ~~3~~ 83 of ITU P.~~86~~ 863 .~~:~~

(7) The four speech quality readings shall be calculated and reported.

Additional Proposed Changes

File Name	Description	Approved
PC-31-NFPA_1930.docx	Proposed text for Section 13.2.1.13.2	

Statement of Problem and Substantiation for Public Comment

This PC is being submitted on behalf of the task group created during the First Draft Meeting consisting of Motorola, L3Harris, JVCKenwood, SEI, and Intertek. This change updates the test signal file names for consistency with other PCs being entered by this task group. Additionally, it removes

subsection (2) which allowed for the signals to be altered. This is because our other PC specifies exactly how the files need to be altered. Lastly, this PC corrects the reference made to ITU P.863

Related Public Comments for This Document

Related Comment	Relationship
Public Comment No. 30-NFPA 1930-2023 [New Section after 13.2.1.12]	

Related Item

- First Draft Public Inputs 38, 46, 57, 59, 60, 61, 78, 81, 84, 90

Submitter Information Verification

Submitter Full Name: Benjamin Hanna
Organization: Safety Equipment Institute (SE
Street Address:
City:
State:
Zip:
Submittal Date: Thu Dec 07 10:56:02 EST 2023
Committee: FAE-ELS

Committee Statement

Committee Action: Rejected but see related SR

Resolution: SR-37-NFPA 1930-2024

Statement: This change updates the test signal file names for consistency with other second revisions. Additionally, it removes subsection (2) which allowed for the signals to be altered. This is because other SRs specify exactly how the files need to be altered. Lastly, this SR corrects the reference made to ITU P.863.

Public Comment No. 32-NFPA 1930-2023 [Sections 13.2.1.16, 13.2.1.17, 13.2.1.18]

Sections 13.2.1.16, 13.2.1.17, 13.2.1.18

13.2.1.16 RF Device RFDC Receive Audio Speech Quality Test.

The RF device RFDC receive audio speech quality test shall be conducted in accordance with the following procedure *(see Figure 13.2.1.16)*:

(1) The volume of the RF device shall be set to the maximum rated audio as specified by the manufacturer.

(2) The audio output shall be scaled and ground referenced for the speech quality test system to achieve the best mean opinion score (MOS).

(3) The RF device test set/service monitor shall have preemphasis enabled and transmit power set to a level that provides a power level measured at the device under test (DUT) of −60 dBm ±3 dBm.

(4) The audio levels shall be adjusted and recorded from the speech quality test system until the FM peak modulation is between 2.0 kHz and 2.2 kHz from the service monitor using the “Male1_1st_~~Set_8k~~ LMR .wav” file and used throughout each individual test method.

(5) The RF signal between the RF device test set and the DUT shall be directly connected (i.e., wired).

(6) The drum reference point (DRP) to field-free transfer function shall be applied to receive testing using HATS' artificial ear.

(7) All alert tones shall be turned off for speech quality testing.

(8) The measurement shall be started and the speech quality result measured and reported.

Figure 13.2.1.16 Measurement Setup for RF Device RFDC Receive Audio Speech Quality Test.

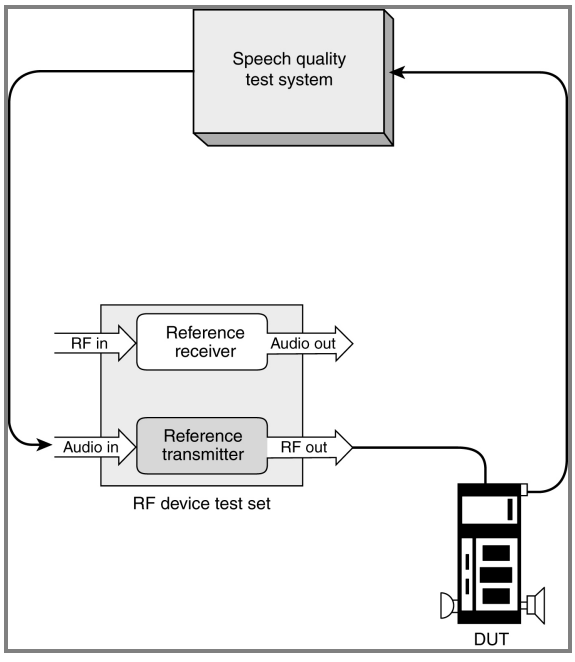

13.2.1.17 RF Device Bluetooth® Receive Audio Speech Quality Test.

The RF device Bluetooth® receive audio speech quality test shall be conducted in accordance with the following procedure *(see Figure 13.2.1.17)*:

(1) The volume of the RF device shall be set to the maximum rated audio as specified by the manufacturer.

(2) The audio output shall be scaled and ground referenced for the speech quality test system to achieve the best MOS.

(3) The RF device test set/service monitor shall have preemphasis enabled and transmit power set to a level that provides a power level measured at the device under test (DUT) of −60 dBm ±3 dBm.

(4) The audio levels shall be adjusted and recorded from the speech quality test system until the FM peak modulation is between 2.0 kHz and 2.2 kHz from the service monitor using the "Male1_1st_~~Set_8k~~ LMR .wav" file and used throughout each individual test method.

(5) The RF signal between the RF device test set and the DUT shall be directly connected (i.e., wired).

(6) The measurement shall be started and the speech quality result measured and reported.

Figure 13.2.1.17 Measurement Setup for RF Device Bluetooth® Receive Audio Speech Quality Test.

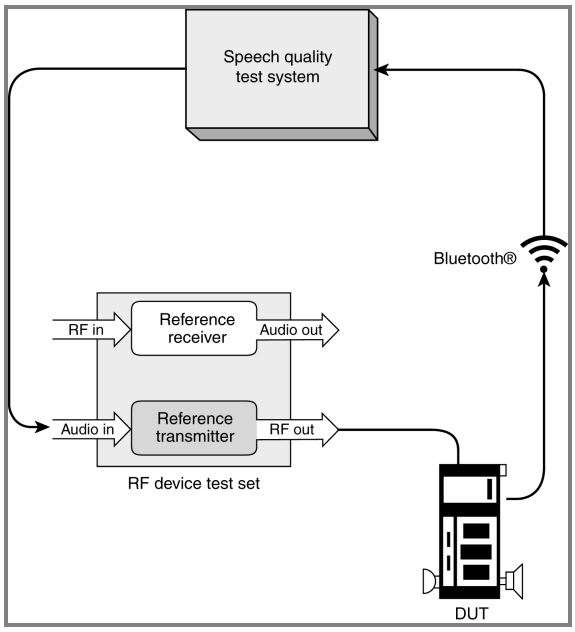

13.2.1.18 RF Device Speaker Receive Audio Speech Quality Test.

The RF device speaker receive audio speech quality test shall be conducted in accordance with the following procedure *(see Figure 13.2.1.18)*:

(1) The receiving RF device speaker shall be set in accordance with the following procedure:

(2) The receiving RF device speaker shall be mounted in front of the artificial ear via the manufacturer-provided fixture.

(3) The RF device speaker shall be centered to the artificial ear at a horizontal distance of 50 mm ±5 mm (2 in. ±0.2 in.).

(4) The volume of the RF device shall be set to the maximum rated audio as specified by the manufacturer.

(5) The RF device test set/service monitor shall have preemphasis enabled and transmit power set to a level that provides a power level measured at the device under test (DUT) of –60 dBm ±3 dBm.

(6) The audio levels shall be adjusted and recorded from the speech quality test system until the FM peak modulation is between 2.0 kHz and 2.2 kHz from the radio test set/service monitor using the “Male1_1st_~~Set_8k~~ LMR .wav” file and used throughout each individual test method.

(7) The input sensitivity of the speech quality analyzer shall be set to the level of the artificial ear calibration *(see 13.2.1.11)*.

(8) The RF signal between the RF device test set and the DUT shall be directly connected (i.e., wired).

(9) The measurement shall be started and the speech quality result reading reported.

Figure 13.2.1.18 Measurement Setup for RF Device Speaker Receive Audio Speech Quality Test.

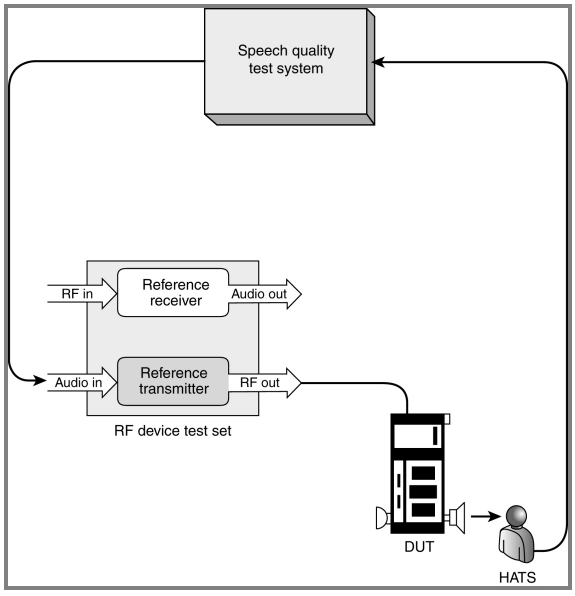

Statement of Problem and Substantiation for Public Comment

This PC is being submitted on behalf of the task group created during the First Draft Meeting consisting of Motorola, L3Harris, JVCKenwood, SEI, and Intertek. This change updates the test signal file name for consistency with other PCs that will be entered by this task group.

Related Public Comments for This Document

Related Comment	Relationship
Public Comment No. 30-NFPA 1930-2023 [New Section after 13.2.1.12]	

Related Item

- First Draft Public Inputs 38, 46, 57, 59, 60, 61, 78, 81, 84, 90

Submitter Information Verification

Submitter Full Name: Benjamin Hanna
Organization: Safety Equipment Institute (SE
Street Address:
City:
State:
Zip:
Submittal Date: Thu Dec 07 11:15:06 EST 2023
Committee: FAE-ELS

Committee Statement

Committee Action: Rejected but see related SR
Resolution: SR-38-NFPA 1930-2024
Statement: This change updates the test signal file name for consistency with other SRs.

Public Comment No. 16-NFPA 1930-2023 [Section No. A.3.3.57]

A.3.3.57 Hazardous (Classified) Location (HazLoc)

A hazardous (classified) location is a location in which an explosive gas atmosphere or explosive dust atmosphere might exist. Electrical equipment used where such atmospheres might exist should be protected against the risk of explosion from energy or thermal ignition sources. In this standard, intrinsic safety (IS) and nonincendive (NI) are protection concepts associated with the rating of equipment for operation in potentially explosive atmospheres. IS and NI ratings consider the nature of the explosive atmosphere encountered — Class I being explosive gas atmospheres and Class II being explosive dust atmospheres — and the frequency or interval of the presence of such explosive atmospheres (i.e., continuously, intermittently, or abnormally). The frequency or interval of the presence of the explosive atmosphere determines the proper ~~division~~ Division (i. e.~~g.~~ , Division 1 or Division 2) or ~~zone~~ Zone (i. e.~~g.~~ , Zone 0, Zone 1, or Zone 2) classifications that are applied to a particular IS or NI rating. To determine the appropriate IS or NI rating for thermal imagers and RF devices, the AHJ identifies the expected explosive atmospheres likely to be encountered and the expected frequency or interval of the presence of such expected explosive atmospheres.

~~Some examples of flammable and combustible material include flammable gases, flammable liquid-produced vapors, combustible liquid-produced vapors, combustible dusts, and ignitible fibers/flyings.~~

Statement of Problem and Substantiation for Public Comment

These revisions align this Annex item in NFPA 1930 with the comparaeel Annex item in NFPA 1970. In addition, it reflects industry convention regarding capitalization, and grammatical norms regarding use of "e.g." versus "i.e."

Related Item

• First Revision No. 68-NFPA 1930-2023 [Sections 3.3.55, 3.3.56]

Submitter Information Verification

Submitter Full Name: Paul Kelly
Organization: UL Solutions
Street Address:
City:
State:
Zip:
Submittal Date: Tue Dec 05 16:03:03 EST 2023
Committee: FAE-ELS

Committee Statement

Committee Action: Rejected but see related SR
Resolution: SR-12-NFPA 1930-2024

Statement: These revisions align this Annex item in NFPA 1930 with the comparaeel Annex item in NFPA 1970. In addition, it reflects industry convention regarding capitalization, and grammatical norms regarding use of "e.g." versus "i.e."

Public Comment No. 17-NFPA 1930-2023 [Section No. A.3.3.57.2.10]

~~**A.3.3.57.2.10** – Nonincendive Circuit.~~ –

~~The circuit is evaluated under prescribed test conditions.~~

Statement of Problem and Substantiation for Public Comment

Public Comment No. 19-NFPA 1930-2023 [Section No. 3.3.57.2.10] proposes to add this text to the 3.3.57.2.10 definition. Acceptance of PC-19 allows for the deletion of A.3.3.57.2.10. This revision aligns NFPA 1930 with NFPA 1970.

Related Item

• First Revision No. 68-NFPA 1930-2023 [Sections 3.3.55, 3.3.56]

Submitter Information Verification

Submitter Full Name: Paul Kelly
Organization: UL Solutions
Street Address:
City:
State:
Zip:
Submittal Date: Tue Dec 05 16:13:31 EST 2023
Committee: FAE-ELS

Committee Statement

Committee Action: Rejected

Resolution: This additional clause provides immediately apparent clarifying details regarding the protection technique and more accurately reflects the National Electrical Code. Further, this addition aligns NFPA 1930 with the comparable text in NFPA 1970. With this alignment, A.3.3.57.2.10 can be deleted, further aligning NFPA 1930 with NFPA 1970.

Public Comment No. 18-NFPA 1930-2023 [Section No. A.6.7]

A.6.7

For decades, the explosion protection requirements for RF devices have traditionally been derived from intrinsic safety (IS) requirements, while the explosion protection requirements for thermal imagers have traditionally been derived from nonincendive (NI) requirements. Both of these explosion protections are from *NFPA 70, National Electrical Code (NEC)*. The *NEC* provides requirements for fixed electrical power installations in hazardous (classified) locations such as refineries and grain elevators. The use-case for fire service portable devices is different in many ways from fixed electrical installations. In addition, changes were made recently in how testing organizations test certain fire service devices for explosion protection (e.g., RF devices ~~for IS~~). These changes ~~provide~~ provided an opportunity ~~to determine~~ to revisit what the exact level of explosion protection is really required for portable devices used in the fire service. The committee has spent a significant amount of time looking at the various issues, reviewing the past history of incidents, and talking to industry experts. ~~In~~ This standard, with regard to explosion protection, ~~this standard~~ reflects that extensive analysis and the resulting decision. The following information is an explanation of some of the many issues and tradeoffs that were considered during this process.

First, the term " *certified on delivery"* warrants explanation. The firefighter faces many varied operating conditions and therefore needs equipment that can span those multiple conditions. Designing for hazardous locations, as classified by the *NEC*, is done with standards that often assume permanent mounting of electrical fixtures within a defined area. None of those areas approaches the environment found within any structure fire. As such, there is no established set of failure mechanisms, practices for design, or means of testing and validation that would make a product certified for use in an *NEC*-classified area retain its “guarantee of safety” in a structural fire. In other words, a product designed and certified for even the most hazardous conditions can lose its " guarantee of safety" after its first exposure to adverse environments commonly found on the ~~fireground~~ fire ground . In a sense then, the pursuit of traditional *NEC* IS certifications might not have provided the level of assurance that the fire service in fact thought it did. Because the purpose and scope of this document ~~is primarily~~ is first and foremost rooted in defining a product suitable for use on an active ~~fireground~~ fire ground , it cannot be ignored that one of its requirements can be invalidated by the resulting product’s intended use-case.

Next, there is the reality that to date in the United States there has been no known instance of a fire service portable thermal imager or RF device ever having caused an explosion — it should be pointed out that many fire service organizations do not use IS-rated portables, so this fact is especially notable. The task group investigated the prior history with multiple organizations, determined that there were only three possible incidents, and upon detailed investigation determined that none of them had anything to do with the portable device.

However, there remain multiple first-responder missions in environments that do ~~resemble the~~ resemble *NEC*-classified hazardous locations. These include incident scenes without a current active fire, such as fuel spills and reported or actual gas leaks. These environments resemble classified hazardous locations in that there is likely a presence of an ignitible atmosphere ~~present~~ ; however, they differ in the following ways from what was envisioned in the *NEC* for explosion protection certifications:

(1) In these areas, there ~~might~~ is likely to be multiple pieces of commercial or industrial equipment not designed to any explosion protection standard and, by their very nature, could be capable or even likely of igniting an atmosphere in normal or intended operation. In contrast, products designed for use in *NEC*-classified environments are designed so as to prevent the chance of combustion under normal operating conditions (i.e., Division 2 classified areas) or for situations where there are multiple fault conditions (i.e., Division 1 classified areas).

(2) Devices used by the firefighter spend much of their product life in relatively benign environments, interrupted by brief excursions into extremely hostile environments where combustion is often taking place. Due to the transient nature of this exposure, there is only a small window of time where the benefit of a product designed for use in an explosive atmosphere is of value. By contrast, products designed for use in *NEC*-classified Division 1 hazardous locations utilizing IS as the type of explosion protection, are intended for continuous use in those environments.

(3) Portable electrical devices used by first responders have multiple items that can either be ~~either~~ disconnected or replaced, such as RSMs, batteries, and interfaces to self-contained breathing apparatus (SCBA) masks. For example, IS-rated portable radios come with instructions not to change the battery in a hazardous environment. However, it is very

possible that the RSM connection could ~~accidently~~ accidentally become disconnected in the hazardous atmosphere. By contrast, fixed electrical installations in hazardous areas are physically interconnected by secured conduit and cable systems to the enclosures. This minimizes the likelihood of any sparks from being created within the area that contains the hazardous material, and also contains any explosions that might occur.

It is recognized that it might be desirable to obtain the level of confidence and safety resulting from the inherent explosion protection design techniques required to gain certification for use in *NEC*-classified Division 1 hazardous locations. However, currently no solution exists that would enable a product to retain its " guarantee of safety" during or after exposure to the extreme environment of an active fire. It is this intent that is captured by the term " *certified on delivery*." There is an expectation that both the users and the AHJ will monitor explosion-protected equipment for continued fitness for use, including regular visual inspection for obvious compromise, examination and replacement of aging or damaged batteries, and periodic maintenance as prescribed by the manufacturer.

Therefore, at this time, this minimum standard requires Division 2 NI certification for portable devices. This does not stop vendors and the fire service from pursuing Division 1 IS certified portable devices if they so desire.

Statement of Problem and Substantiation for Public Comment

These revisions align this Annex item in NFPA 1930 with the comparable Annex item in NFPA 1970.

Related Item

• First Revision No. 65-NFPA 1930-2023 [New Section after 6.6]

Submitter Information Verification

Submitter Full Name: Paul Kelly
Organization: UL Solutions
Street Address:
City:
State:
Zip:
Submittal Date: Tue Dec 05 16:27:00 EST 2023
Committee: FAE-ELS

Committee Statement

Committee Action: Rejected but see related SR
Resolution: SR-4-NFPA 1930-2024
Statement: These revisions align this Annex item in NFPA 1930 with the comparable Annex item in NFPA 1970.

Public Comment No. 24-NFPA 1930-2023 [Section No. A.6.7.2.1]

~~A.6.7.2.1~~ —

~~This suitability is demonstrated by being certified as one of the following in accordance with ANSI/UL 121201, *Nonincendive Electrical Equipment for Use in Class I and II, Division 2 and Class III, Divisions 1 and 2 Hazardous (Classified) Locations* :~~

(1) ~~Nonincendive equipment, stand-alone type~~

(2) ~~Nonincendive equipment, electrically interconnected type~~

(3) ~~Nonincendive system~~

Statement of Problem and Substantiation for Public Comment

Public Comment No. 5-NFPA 1930-2023 [Section No. 6.7.2.1] proposes to add this text to 6.7.2.1. Acceptance of PC-5 allows for the deletion of A.6.7.2.1. This revision aligns NFPA 1930 with NFPA 1970.

Related Item

• First Revision No. 65-NFPA 1930-2023 [New Section after 6.6]

Submitter Information Verification

Submitter Full Name: Paul Kelly
Organization: UL Solutions
Street Address:
City:
State:
Zip:
Submittal Date: Tue Dec 05 21:53:25 EST 2023
Committee: FAE-ELS

Committee Statement

Committee Action: Rejected but see related SR
Resolution: SR-6-NFPA 1930-2024
Statement: Text added to 6.7.2.1 and 6.7.1, therefore this information was removed from the annex. This revision aligns NFPA 1930 with NFPA 1970.

Public Comment No. 25-NFPA 1930-2023 [Section No. A.6.7.3.1]

~~A.6.7.3.1~~ —

~~This suitability is demonstrated by being certified as one of the following in accordance with ANSI/UL 913, *Intrinsically Safe Apparatus and Associated Apparatus for Use in Class I, II, and III, Division 1 Hazardous (Classified) Locations*:~~

(1) ~~Intrinsically safe apparatus, stand-alone type~~

(2) ~~Intrinsically safe system~~

Statement of Problem and Substantiation for Public Comment

Public Comment No. 8-NFPA 1930-2023 [Section No. 6.7.3.1] proposes to add this text to 6.7.3.1. Acceptance of PC-8 allows for the deletion of A.6.7.3.1. This revision aligns NFPA 1930 with NFPA 1970.

Related Item

• First Revision No. 65-NFPA 1930-2023 [New Section after 6.6]

Submitter Information Verification

Submitter Full Name: Paul Kelly
Organization: UL Solutions
Street Address:
City:
State:
Zip:
Submittal Date: Tue Dec 05 22:02:32 EST 2023
Committee: FAE-ELS

Committee Statement

Committee Action: Rejected but see related SR

Resolution: SR-10-NFPA 1930-2024

Statement: Thermal imagers rely on UL 913 Sixth Edition as the HazLoc standard for intrinsic safety. Therefore, it needs to be included as a Normative reference here, not just in an Informative Annex. Further, this addition aligns with the comparable text in NFPA 1970. Text added to 6.7.3.1 and 6.7.1, therefore this information was removed from the annex.

Public Comment No. 23-NFPA 1930-2023 [Section No. A.11.22]

A.11.22

For decades, the explosion protection requirements for RF devices have traditionally been derived from intrinsic safety (IS) requirements, while the explosion protection requirements for thermal imagers have traditionally been derived from nonincendive (NI) requirements. Both of these explosion protections are from *NFPA 70, National Electrical Code (NEC)*. The *NEC* provides requirements for fixed electrical power installations in hazardous (classified) locations such as refineries and grain elevators. The use-case for fire service portable devices is different in many ways from fixed electrical installations. In addition, changes were made recently in how testing organizations test certain fire service devices for explosion protection (e.g., RF devices ~~for IS~~). These changes ~~provide~~ provided an opportunity to ~~determine~~ revisit what the exact level of explosion protection is really required for portable devices used in the fire service. The committee has spent a significant amount of time looking at the various issues, reviewing the past history of incidents, and talking to industry experts. ~~In~~ This standard, with regard to explosion protection, ~~this standard~~ reflects that extensive analysis and the resulting decision. The following information is an explanation of some of the many issues and tradeoffs that were considered during this process.

First, the term " *certified on delivery"* warrants explanation. The firefighter faces many varied operating conditions and therefore needs equipment that can span those multiple conditions. Designing for hazardous locations, as classified by the *NEC*, is done with standards that often assume permanent mounting of electrical fixtures within a defined area. None of those areas approaches the environment found within any structure fire. As such, there is no established set of failure mechanisms, practices for design, or means of testing and validation that would make a product certified for use in an *NEC*-classified area retain its “guarantee of safety” in a structural fire. In other words, a product designed and certified for even the most hazardous conditions can lose its " guarantee of safety" after its first exposure to adverse environments commonly found on the ~~fireground~~ fire ground . In a sense then, the pursuit of traditional *NEC* IS certifications might not have provided the level of assurance that the fire service in fact thought it did. Because the purpose and scope of this document ~~is primarily~~ is first and foremost rooted in defining a product suitable for use on an active ~~fireground~~ fire ground , it cannot be ignored that one of its requirements can be invalidated by the resulting product’s intended use-case.

Next, there is the reality that to date in the United States, there has been no known instance of a fire service portable thermal imager or RF device ever having caused an explosion — it should be pointed out that many fire service organizations do not use IS-rated portables, so this fact is especially notable. The task group investigated the prior history with multiple organizations, determined that there were only three possible incidents, and upon detailed investigation determined that none of them had anything to do with the portable device.

However, there remain multiple first-responder missions in environments that do ~~resemble the~~ resemble *NEC*-classified hazardous locations. These include incident scenes without a current active fire, such as fuel spills and reported or actual gas leaks. These environments resemble classified hazardous locations in that there is likely an ignitible atmosphere present; however, they differ in the following ways from what was envisioned in the *NEC* explosion protection certifications:

(1) In these areas, there ~~might~~ is likely to be multiple pieces of commercial or industrial equipment not designed to any explosion protection standard and, by their very nature, could be capable or even likely of igniting an atmosphere in normal or intended operation. In contrast, products designed for use in *NEC*-classified environments are designed so as to prevent the chance of combustion under normal operating conditions (i.e., Division 2 classified areas) or for situations where there are multiple fault conditions (i.e., Division 1 classified areas).

(2) Devices used by the firefighter spend much of their product life in relatively benign environments, interrupted by brief excursions into extremely hostile environments where combustion is often taking place. Due to the transient nature of this exposure, there is only a small window of time where the benefit of a product designed for use in an explosive atmosphere is of value. By contrast, products designed for use in *NEC*-classified Division 1 hazardous locations utilizing IS as the type of explosion protection, are intended for continuous use in those environments.

(3) Portable devices used by first responders have multiple items that can either be ~~either~~ disconnected or replaced, such as RSMs, batteries, and interfaces to self-contained breathing apparatus (SCBA) masks. For example, IS-rated portable radios come with instructions not to change the battery in a hazardous environment. However, it is very

possible that the RSM connection could accidently become disconnected in the hazardous atmosphere. By contrast, fixed electrical installations in hazardous areas are physically interconnected by secured conduit and cable systems to the enclosures. This minimizes the likelihood of any sparks from being created within the area that contains the hazardous material, and also contains any explosions that might occur.

It is recognized that it might be desirable to obtain the level of confidence and safety resulting from the inherent explosion protection design techniques required to gain certification for use in *NEC*-classified Division 1 hazardous locations. However, currently no solution exists that would enable a product to retain its " guarantee of safety" during or after exposure to the extreme environment of an active fire. It is this intent that is captured by the term " *certified on delivery"* . There is an expectation that both the users and the AHJ will monitor explosion-protected equipment for continued fitness for use, including regular visual inspection for obvious compromise, examination and replacement of aging or damaged batteries, and periodic maintenance as prescribed by the manufacturer.

Therefore, at this time, this minimum standard requires Division 2 NI certification for portable devices. This does not stop vendors and the fire service from pursuing Division 1 IS certified portable devices if they so desire.

Statement of Problem and Substantiation for Public Comment

These revisions align this Annex item in NFPA 1930 with the comparable Annex item in NFPA 1970.

Related Item

• First Revision No. 67-NFPA 1930-2023 [Section No. 11.22]

Submitter Information Verification

Submitter Full Name: Paul Kelly
Organization: UL Solutions
Street Address:
City:
State:
Zip:
Submittal Date: Tue Dec 05 20:42:25 EST 2023
Committee: FAE-ELS

Committee Statement

Committee Action: Rejected but see related SR
Resolution: SR-21-NFPA 1930-2024
Statement: These revisions align this Annex item in NFPA 1930 with the comparable Annex item in NFPA 1970.

Public Comment No. 26-NFPA 1930-2023 [Section No. A.11.22.2]

~~**A.11.22.2** —~~

~~This suitability is demonstrated by being certified as nonincendive equipment in accordance with ANSI/UL 121201, *Nonincendive Electrical Equipment for Use in Class I and II, Division 2 and Class III, Divisions 1 and 2 Hazardous (Classified) Locations* .~~

Statement of Problem and Substantiation for Public Comment

Public Comment No. 11-NFPA 1930-2023 [Section No. 11.22.2 [Excluding any Sub-Sections]] proposes to add this text to 11.22.2. Acceptance of PC-11 allows for the deletion of A.11.22.2. This revision aligns NFPA 1930 with NFPA 1970.

Related Item

• First Revision No. 67-NFPA 1930-2023 [Section No. 11.22]

Submitter Information Verification

Submitter Full Name: Paul Kelly
Organization: UL Solutions
Street Address:
City:
State:
Zip:
Submittal Date: Tue Dec 05 22:08:42 EST 2023
Committee: FAE-ELS

Committee Statement

Committee Action: Rejected but see related SR
Resolution: SR-22-NFPA 1930-2024
Statement: Inclusion of SR 19 allows for the deletion of A.11.22.2. This revision aligns NFPA 1930 with NFPA 1970.

Public Comment No. 27-NFPA 1930-2023 [Section No. A.11.22.3.1]

~~**A.11.22.3.1** —~~

~~This suitability is demonstrated by being certified as an intrinsically safe system in accordance with ANSI/TIA-4950-A or ANSI/TIA-4950-B, *Requirements for Battery-Powered, Portable Land Mobile Radio Applications in Class I, II, and III, Division 1, Hazardous (Classified) Locations,* 2014 or 2020, respectively, or ANSI/UL 913, *Intrinsically Safe Apparatus and Associated Apparatus for Use in Class I, II, III, Division 1, Hazardous (Classified) Locations.*~~

Statement of Problem and Substantiation for Public Comment

Public Comment No. 21-NFPA 1930-2023 [Section No. 11.22.3.1] proposes to add this text to 11.22.3.1. Acceptance of PC-21 allows for the deletion of A.11.22.3.1. This revision aligns NFPA 1930 with NFPA 1970.

Related Item

• First Revision No. 67-NFPA 1930-2023 [Section No. 11.22]

Submitter Information Verification

Submitter Full Name: Paul Kelly
Organization: UL Solutions
Street Address:
City:
State:
Zip:
Submittal Date: Tue Dec 05 22:14:33 EST 2023
Committee: FAE-ELS

Committee Statement

Committee Action: Rejected but see related SR

Resolution: SR-20-NFPA 1930-2024

Statement: RF devices and RSMs rely on UL 913 Sixth Edition and TIA 4950-A and B as the HazLoc standard for intrinsic safety. Therefore, they need to be included as Normative reference here, not just in an Informative Annex. Further, this addition aligns NFPA 1930 with the comparable text in NFPA 1970.

This additional wording, adding the title to 11.22.3.2, provides immediately apparent clarifying details regarding the area of concern.

Removed annex material no longer necessary.

NATIONAL FIRE PROTECTION ASSOCIATION
The leading information and knowledge resource on fire, electrical and related hazards

M E M O R A N D U M

TO: Technical Committee on Electronic Safety Equipment

FROM: Yvonne Smith, *Committee Administrator*

DATE: June 26, 2024

SUBJECT: NFPA 1930 Second Draft Technical Committee FINAL Ballot Results (CustF2024)

According to the final ballot results, all ballot items received the necessary affirmative votes to pass ballot.

35 **Members Eligible to Vote**
6 **Members Not Returned** (*Cruger, Herbert, Storti, Vaughan, Warle, Worrell*)

The attached report shows the number of affirmative, negative, and abstaining votes as well as the explanation of the vote for **each** revision**.**

To pass ballot, **each** revision requires: (1) a simple majority of those eligible to vote and (2) an affirmative vote of $^{2}/_{3}$ of ballots returned. See Sections 3.3.4.3.(c) and 4.3.10.1 of the ***Regulations Governing the Development of NFPA Standards***.

Second Revision No. 42-NFPA 1930-2024 [Global Comment]

Add “and 11.9” after “11.7” to the following sections:

13.3.5.6, 13.4.5.6, 13.5.4.8, 13.6.4.6, 13.9.6.5, 13.11.5.3, 13.12.6, 13.13.5.2

Submitter Information Verification

Committee: FAE-ELS
Submittal Date: Wed Mar 06 09:59:50 EST 2024

Committee Statement

Committee Statement: Clarifying the RSM needs to be checked for functionality after tests performed.
Response Message: SR-42-NFPA 1930-2024

Ballot Results

✔ **This item has passed ballot**

35 Eligible Voters
6 Not Returned
25 Affirmative All
4 Affirmative with Comments
0 Negative with Comments
0 Abstention

Not Returned

Cruger, Lorenzo
Herbert, Don
Storti, William
Vaughan, Christopher R.
Warle, Magnus
Worrell, Cody

Affirmative All

Agi, Kamil
Allen, Jason L.
Bahri, Albert J
Berney-Smith, Marcus

Brooks, Joseph Francis
Chavez, Louis
Connolly, James M.
Cook, Jeffrey Curtis
Donnelly, Michelle
Ericson, Dan
Forsyth, William
Gestler, Craig
Grove, Collin
Haase, Wayne C.
Hanna, Benjamin
Hussey, Michael C.
Lentz, Kevin D.
Little, David A.
McCarraher, Gary
McKenna, Michael F.
Quinn, Michael P.
Richardson, Michael T.
Sampl, Christopher M.
Seay, Angelina
Varner, Bruce H.

Affirmative with Comment

Morris, John H.
A
Namm, Joseph
accepted as is
Smith, Clinton
Agree
Turner, Jon
Agreed

Second Revision No. 49-NFPA 1930-2024 [Detail]

Change title of 12.2 to read: Power Source Performance

Submitter Information Verification

Committee: FAE-ELS
Submittal Date: Wed Mar 06 10:25:45 EST 2024

Committee Statement

Committee Statement: Correcting title to match test method.
Response Message: SR-49-NFPA 1930-2024

Ballot Results

This item has passed ballot

35 Eligible Voters
6 Not Returned
25 Affirmative All
4 Affirmative with Comments
0 Negative with Comments
0 Abstention

Not Returned

Cruger, Lorenzo
Herbert, Don
Storti, William
Vaughan, Christopher R.
Warle, Magnus
Worrell, Cody

Affirmative All

Agi, Kamil
Allen, Jason L.
Bahri, Albert J
Berney-Smith, Marcus
Brooks, Joseph Francis
Chavez, Louis

Connolly, James M.
Cook, Jeffrey Curtis
Donnelly, Michelle
Ericson, Dan
Forsyth, William
Gestler, Craig
Grove, Collin
Haase, Wayne C.
Hanna, Benjamin
Hussey, Michael C.
Lentz, Kevin D.
Little, David A.
McCarraher, Gary
McKenna, Michael F.
Quinn, Michael P.
Richardson, Michael T.
Sampl, Christopher M.
Seay, Angelina
Varner, Bruce H.

Affirmative with Comment

Morris, John H.
A
Namm, Joseph
accepted as is
Smith, Clinton
Agree
Turner, Jon
Agreed

Second Revision No. 51-NFPA 1930-2024 [Detail]

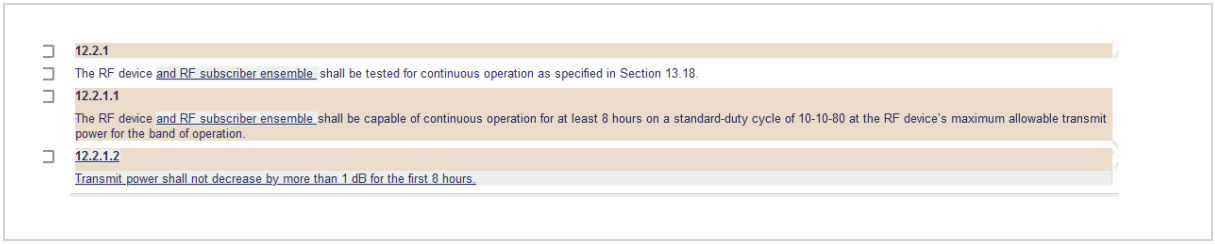

12.2.1

The RF device and RF subscriber ensemble shall be tested for continuous operation as specified in Section 13.18.

12.2.1.1

The RF device and RF subscriber ensemble shall be capable of continuous operation for at least 8 hours on a standard-duty cycle of 10-10-80 at the RF device's maximum allowable transmit power for the band of operation.

12.2.1.2

Transmit power shall not decrease by more than 1 dB for the first 8 hours.

Supplemental Information

File Name	Description	Approved
1930_SR_51_12.2_detail.docx		

Submitter Information Verification

Committee: FAE-ELS

Submittal Date: Wed Mar 06 10:55:01 EST 2024

Committee Statement

Committee Statement: Clarifies this test is applicable to the RF subscriber ensemble and adds section removed from wrong section in chapter 12.

Response Message: SR-51-NFPA 1930-2024

Ballot Results

✔ **This item has passed ballot**

35 Eligible Voters
6 Not Returned
25 Affirmative All
4 Affirmative with Comments
0 Negative with Comments
0 Abstention

Not Returned

Cruger, Lorenzo

Herbert, Don

Storti, William

Vaughan, Christopher R.

Warle, Magnus

Worrell, Cody

Affirmative All

Agi, Kamil

Allen, Jason L.

Bahri, Albert J

Berney-Smith, Marcus

Brooks, Joseph Francis

Chavez, Louis

Connolly, James M.

Cook, Jeffrey Curtis

Donnelly, Michelle

Ericson, Dan

Forsyth, William

Gestler, Craig

Grove, Collin

Haase, Wayne C.

Hanna, Benjamin

Hussey, Michael C.

Lentz, Kevin D.

Little, David A.

McCarraher, Gary

McKenna, Michael F.

Quinn, Michael P.

Richardson, Michael T.

Sampl, Christopher M.

Seay, Angelina

Varner, Bruce H.

Affirmative with Comment

Morris, John H.

A

Namm, Joseph

accepted as is

Smith, Clinton

Agree

Turner, Jon

Agreed

Second Revision No. 78-NFPA 1930-2024 [Detail]

Add new sections:

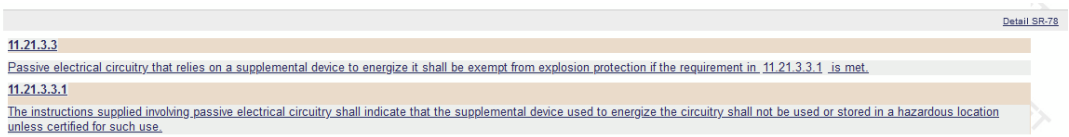

Submitter Information Verification

Committee: FAE-ELS
Submittal Date: Fri Apr 05 01:16:54 EDT 2024

Committee Statement

Committee Statement: Adding to be consistent with NFPA 1970 and NFPA 1950.
Response Message: SR-78-NFPA 1930-2024

Ballot Results

✔ **This item has passed ballot**

35 Eligible Voters
6 Not Returned
25 Affirmative All
4 Affirmative with Comments
0 Negative with Comments
0 Abstention

Not Returned

Cruger, Lorenzo
Herbert, Don
Storti, William
Vaughan, Christopher R.
Warle, Magnus
Worrell, Cody

Affirmative All

Agi, Kamil

Allen, Jason L.
Bahri, Albert J
Berney-Smith, Marcus
Brooks, Joseph Francis
Chavez, Louis
Connolly, James M.
Cook, Jeffrey Curtis
Donnelly, Michelle
Ericson, Dan
Forsyth, William
Gestler, Craig
Grove, Collin
Haase, Wayne C.
Hanna, Benjamin
Hussey, Michael C.
Lentz, Kevin D.
Little, David A.
McCarraher, Gary
McKenna, Michael F.
Quinn, Michael P.
Richardson, Michael T.
Sampl, Christopher M.
Seay, Angelina
Varner, Bruce H.

Affirmative with Comment

Morris, John H.
A
Namm, Joseph
accepted as is
Smith, Clinton
Agree
Turner, Jon
Agreed

Second Revision No. 79-NFPA 1930-2024 [Detail]

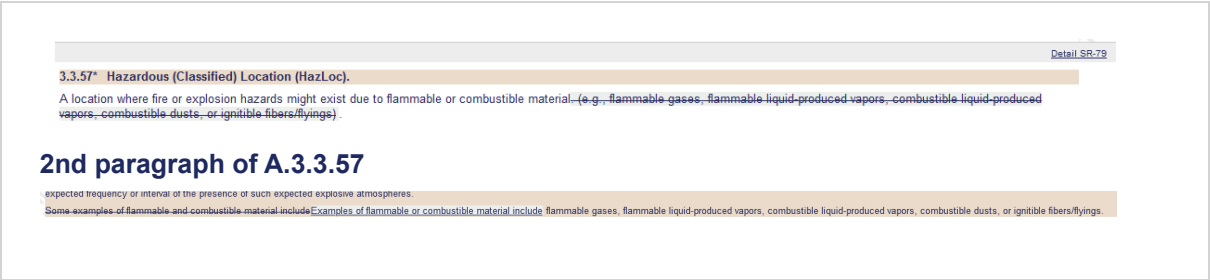

Detail SR-79

3.3.57* Hazardous (Classified) Location (HazLoc).

A location where fire or explosion hazards might exist due to flammable or combustible material. ~~(e.g., flammable gases, flammable liquid-produced vapors, combustible liquid-produced vapors, combustible dusts, or ignitible fibers/flyings)~~ .

2nd paragraph of A.3.3.57

expected frequency or interval of the presence of such expected explosive atmospheres.

~~Some examples of flammable and combustible material include~~Examples of flammable or combustible material include flammable gases, flammable liquid-produced vapors, combustible liquid-produced vapors, combustible dusts, or ignitible fibers/flyings.

Submitter Information Verification

Committee: FAE-ELS

Submittal Date: Mon May 13 10:02:39 EDT 2024

Committee Statement

Committee Statement: This additional clause provides immediately apparent clarifying details regarding the areas of concern and more accurately reflects the National Electrical Code. Further, this addition aligns with the comparable text in NFPA 1970. With this alignment, the last sentence under A.3.3.57 can be deleted.

Response Message: SR-79-NFPA 1930-2024

Public Comment No. 3-NFPA 1930-2023 [Section No. 3.3.57 [Excluding any Sub-Sections]]

Ballot Results

✔ **This item has passed ballot**

35 Eligible Voters
6 Not Returned
25 Affirmative All
4 Affirmative with Comments
0 Negative with Comments
0 Abstention

Not Returned

Cruger, Lorenzo
Herbert, Don
Storti, William
Vaughan, Christopher R.
Warle, Magnus
Worrell, Cody

Affirmative All

Agi, Kamil

Allen, Jason L.

Bahri, Albert J

Berney-Smith, Marcus

Brooks, Joseph Francis

Chavez, Louis

Connolly, James M.

Cook, Jeffrey Curtis

Donnelly, Michelle

Ericson, Dan

Forsyth, William

Gestler, Craig

Grove, Collin

Haase, Wayne C.

Hanna, Benjamin

Hussey, Michael C.

Lentz, Kevin D.

Little, David A.

McCarraher, Gary

McKenna, Michael F.

Quinn, Michael P.

Richardson, Michael T.

Sampl, Christopher M.

Seay, Angelina

Varner, Bruce H.

Affirmative with Comment

Morris, John H.

A

Namm, Joseph

accepted as is

Smith, Clinton

Agree

Turner, Jon

Agreed

Second Revision No. 39-NFPA 1930-2024 [Section No. 2.3.6]

2.3.6 ITU Publications.

International Telecommunication Union (ITU), Place des Nations, 1211 Geneva 20, Switzerland.

ITU-T P.56, *Objective Measurement of Active Speech Level* , 2011.

ITU-T P.863, *Perceptual Objective Listening Quality Assessment*, 2018.

Submitter Information Verification

Committee: FAE-ELS
Submittal Date: Wed Mar 06 09:18:30 EST 2024

Committee Statement

Committee Statement: Adding a reference to ITU-T P.56 based on changes in section 13.2.
Response Message: SR-39-NFPA 1930-2024

Public Comment No. 33-NFPA 1930-2023 [Section No. 2.3.6]

Ballot Results

✔ **This item has passed ballot**

35 Eligible Voters
6 Not Returned
25 Affirmative All
4 Affirmative with Comments
0 Negative with Comments
0 Abstention

Not Returned

Cruger, Lorenzo
Herbert, Don
Storti, William
Vaughan, Christopher R.
Warle, Magnus
Worrell, Cody

Affirmative All

Agi, Kamil
Allen, Jason L.

Bahri, Albert J

Berney-Smith, Marcus

Brooks, Joseph Francis

Chavez, Louis

Connolly, James M.

Cook, Jeffrey Curtis

Donnelly, Michelle

Ericson, Dan

Forsyth, William

Gestler, Craig

Grove, Collin

Haase, Wayne C.

Hanna, Benjamin

Hussey, Michael C.

Lentz, Kevin D.

Little, David A.

McCarraher, Gary

McKenna, Michael F.

Quinn, Michael P.

Richardson, Michael T.

Sampl, Christopher M.

Seay, Angelina

Varner, Bruce H.

Affirmative with Comment

Morris, John H.

A

Namm, Joseph

accepted as is

Smith, Clinton

Agree

Turner, Jon

Agreed

Second Revision No. 16-NFPA 1930-2024 [Section No. 2.3.8]

2.3.8 TIA Publications.

Telecommunications Industry Association, 1310 North Courthouse Road, Suite 890, Arlington, VA 22201.

TIA-102.AABD, *Project 25 Trunking Procedures*, 2014.

TIA-102.CAAA-F, *Project 25 Digital C4FM/CQPSK Transceiver Measurement Methods*, 2021.

TIA-102.CAAB-E, *Land Mobile Radio Transceiver Performance Recommendations, Digital Radio Technology, C4FM/CQPSK Modulation*, 2021.

TIA-603-E, *Land Mobile FM or PM — Communications Equipment — Measurement and Performance Standards*, 2016.

TIA-4950-A, *Requirements for Battery-Powered, Portable Land Mobile Radio Applications in Class I, II, III, Division I, Hazardous (Classified) Locations* , 2014.

TIA-4950-B, *Requirements for Battery-Powered, Portable Land Mobile Radio Applications in Class I, II, III, Division I, Hazardous (Classified) Locations* , 2020.

TIA-5045, *Numeric Identifier for Conventional Analog Operation,* 2017.

Submitter Information Verification

Committee: FAE-ELS

Submittal Date: Mon Mar 04 13:31:57 EST 2024

Committee Statement

Committee Statement: RF devices rely on both editions of these TIA standards as two of the HazLoc standards for intrinsic safety. Therefore, they need to be included as Normative references here and in the body of the standard, not just in an Informative Annex.

Response Message: SR-16-NFPA 1930-2024

Public Comment No. 1-NFPA 1930-2023 [Section No. 2.3.8]

Ballot Results

✔ **This item has passed ballot**

35 Eligible Voters
6 Not Returned
25 Affirmative All
4 Affirmative with Comments
0 Negative with Comments
0 Abstention

Not Returned

Cruger, Lorenzo
Herbert, Don
Storti, William
Vaughan, Christopher R.
Warle, Magnus
Worrell, Cody

Affirmative All

Agi, Kamil
Allen, Jason L.
Bahri, Albert J
Berney-Smith, Marcus
Brooks, Joseph Francis
Chavez, Louis
Connolly, James M.
Cook, Jeffrey Curtis
Donnelly, Michelle
Ericson, Dan
Forsyth, William
Gestler, Craig
Grove, Collin
Haase, Wayne C.
Hanna, Benjamin
Hussey, Michael C.
Lentz, Kevin D.
Little, David A.
McCarraher, Gary
McKenna, Michael F.
Quinn, Michael P.
Richardson, Michael T.
Sampl, Christopher M.
Seay, Angelina
Varner, Bruce H.

Affirmative with Comment

Morris, John H.
A
Namm, Joseph
accepted as is
Smith, Clinton
Agree

Turner, Jon

Agreed

Second Revision No. 14-NFPA 1930-2024 [Section No. 2.3.9]

2.3.9 UL Publications.

Underwriters Laboratories Inc., 333 Pfingsten Road, Northbrook, IL 60062-2096.

UL 913, *Intrinsically Safe Apparatus and Associated Apparatus for Use in Class I, II, III, Division 1, Hazardous (Classified) Locations* , sixth edition, 2002.

UL 1642, *Lithium Batteries*, 2012, revised 2015.

UL 2054, *Household and Commercial Batteries*, 2004, revised 2011.

~~ANSI/~~ UL 121201, *Nonincendive Electrical Equipment for Use in Class I and II, Division 2 and Class III, Divisions 1 and 2 Hazardous (Classified) Locations*, ~~9th edition~~ ninth edition , 2017.

Supplemental Information

File Name	Description	Approved
1930_SR-14_2.3.9.docx		

Submitter Information Verification

Committee: FAE-ELS

Submittal Date: Wed Feb 21 13:40:03 EST 2024

Committee Statement

Committee Statement: RF devices, thermal imagers, and their accessories rely on both UL 913 Sixth Edition as one of the HazLoc standards for intrinsic safety, and on UL 121201 Ninth Edition as the HazLoc standard for nonincendive. Therefore, they need to be included as Normative references here and in the body of the standard, not just in an Informative Annex. Further, this addition aligns with the comparable text in NFPA 1970.

Response Message: SR-14-NFPA 1930-2024

Public Comment No. 2-NFPA 1930-2023 [Section No. 2.3.9]

Ballot Results

✔ **This item has passed ballot**

35 Eligible Voters
6 Not Returned
25 Affirmative All
4 Affirmative with Comments
0 Negative with Comments
0 Abstention

Not Returned

Cruger, Lorenzo
Herbert, Don
Storti, William
Vaughan, Christopher R.
Warle, Magnus
Worrell, Cody

Affirmative All

Agi, Kamil
Allen, Jason L.
Bahri, Albert J
Berney-Smith, Marcus
Brooks, Joseph Francis
Chavez, Louis
Connolly, James M.
Cook, Jeffrey Curtis
Donnelly, Michelle
Ericson, Dan
Forsyth, William
Gestler, Craig
Grove, Collin
Haase, Wayne C.
Hanna, Benjamin
Hussey, Michael C.
Lentz, Kevin D.
Little, David A.
McCarraher, Gary
McKenna, Michael F.
Quinn, Michael P.
Richardson, Michael T.
Sampl, Christopher M.
Seay, Angelina
Varner, Bruce H.

Affirmative with Comment

Morris, John H.
A
Namm, Joseph
accepted as is
Smith, Clinton
Agree

Turner, Jon

Agreed

Second Revision No. 56-NFPA 1930-2024 [Section No. 3.3.55]

3.3.55 Hazard Zone.

The area where ~~members~~ emergency services personnel might be exposed to a hazard or hazardous atmosphere; or a particular substance, device, event, circumstance, or condition that presents a danger ~~to members of the fire department~~ , including immediately dangerous to life and health (IDLH) environments .

Submitter Information Verification

Committee: FAE-ELS
Submittal Date: Wed Mar 06 14:45:29 EST 2024

Committee Statement

Committee Statement: This revision adds clarity that an IDLH atmosphere is a hazard zone.
Response Message: SR-56-NFPA 1930-2024

Ballot Results

✔ **This item has passed ballot**

35 Eligible Voters
6 Not Returned
25 Affirmative All
4 Affirmative with Comments
0 Negative with Comments
0 Abstention

Not Returned

Cruger, Lorenzo
Herbert, Don
Storti, William
Vaughan, Christopher R.
Warle, Magnus
Worrell, Cody

Affirmative All

Agi, Kamil
Allen, Jason L.
Bahri, Albert J
Berney-Smith, Marcus

Brooks, Joseph Francis

Chavez, Louis

Connolly, James M.

Cook, Jeffrey Curtis

Donnelly, Michelle

Ericson, Dan

Forsyth, William

Gestler, Craig

Grove, Collin

Haase, Wayne C.

Hanna, Benjamin

Hussey, Michael C.

Lentz, Kevin D.

Little, David A.

McCarraher, Gary

McKenna, Michael F.

Quinn, Michael P.

Richardson, Michael T.

Sampl, Christopher M.

Seay, Angelina

Varner, Bruce H.

Affirmative with Comment

Morris, John H.

"may be exposed" vs "might be exposed"

Namm, Joseph

accepted as is

Smith, Clinton

Agree

Turner, Jon

Agreed

Second Revision No. 80-NFPA 1930-2024 [Section No. 3.3.66]

3.3.66 In Service.

Ready for immediate use.

~~**3.3.66.1** In Service.~~

~~Ready for immediate use.~~

3.3.66.1* *In Service Hose* .

The status of hose stored in a hose house, on a rack or reel, or on a fire apparatus that is available and ready for immediate use at an incident.

A.3.3.66.1 ~~In Service~~ *In Service Hose* .

Hose in storage where it is not readily available to be put into service at an incident is not considered as in service.

3.3.66.2 *In Service Ladder*.

The status of a fire department ground ladder that has been inspected, maintained, and tested and currently is in use or is ready for immediate use.

Submitter Information Verification

Committee: FAE-ELS
Submittal Date: Fri May 17 08:07:51 EDT 2024

Committee Statement

Committee Statement: Updating terms.
Response Message: SR-80-NFPA 1930-2024

Ballot Results

✔ **This item has passed ballot**

35 Eligible Voters
6 Not Returned
25 Affirmative All
2 Affirmative with Comments
0 Negative with Comments
2 Abstention

Not Returned

Cruger, Lorenzo

Herbert, Don

Storti, William
Vaughan, Christopher R.
Warle, Magnus
Worrell, Cody

Affirmative All

Agi, Kamil
Allen, Jason L.
Bahri, Albert J
Berney-Smith, Marcus
Brooks, Joseph Francis
Chavez, Louis
Connolly, James M.
Cook, Jeffrey Curtis
Donnelly, Michelle
Ericson, Dan
Forsyth, William
Gestler, Craig
Grove, Collin
Haase, Wayne C.
Hanna, Benjamin
Hussey, Michael C.
Lentz, Kevin D.
Little, David A.
McCarraher, Gary
McKenna, Michael F.
Quinn, Michael P.
Richardson, Michael T.
Sampl, Christopher M.
Seay, Angelina
Varner, Bruce H.

Affirmative with Comment

Namm, Joseph
accepted as is
Turner, Jon
Agreed

Abstention

Morris, John H.
Abstaining from hose related information

Smith, Clinton

no my area, however I agree

Second Revision No. 81-NFPA 1930-2024 [Section No. 3.3.148]

3.3.148* Trunking Signaling Block (TSBK).

A form of signaling that uses P25 digital protocol for ID, emergency, and similar messages.

A.3.3.148 Trunking Signaling Block (TSBK).

These messages are typically formatted as a single block message and use the same Trellis coding as an unconfirmed data packet. *(See 11.9.6.)*

~~**3.3.148.1** *Trunking Signaling Block (TSBK).*~~

~~A form of signaling that uses P25 digital protocol for ID, emergency, and similar messages.~~

~~**3.3.148.2** *TSBK (Trunking Signaling Block).*~~

~~See 3.3.148 .~~

Submitter Information Verification

Committee: FAE-ELS
Submittal Date: Fri May 17 08:14:09 EDT 2024

Committee Statement

Committee Statement: Updating definition.
Response Message: SR-81-NFPA 1930-2024

Ballot Results

✔ **This item has passed ballot**

35 Eligible Voters
6 Not Returned
25 Affirmative All
4 Affirmative with Comments
0 Negative with Comments
0 Abstention

Not Returned

Cruger, Lorenzo
Herbert, Don
Storti, William
Vaughan, Christopher R.
Warle, Magnus

Worrell, Cody

Affirmative All

Agi, Kamil
Allen, Jason L.
Bahri, Albert J
Berney-Smith, Marcus
Brooks, Joseph Francis
Chavez, Louis
Connolly, James M.
Cook, Jeffrey Curtis
Donnelly, Michelle
Ericson, Dan
Forsyth, William
Gestler, Craig
Grove, Collin
Haase, Wayne C.
Hanna, Benjamin
Hussey, Michael C.
Lentz, Kevin D.
Little, David A.
McCarraher, Gary
McKenna, Michael F.
Quinn, Michael P.
Richardson, Michael T.
Sampl, Christopher M.
Seay, Angelina
Varner, Bruce H.

Affirmative with Comment

Morris, John H.
A
Namm, Joseph
accepted as is
Smith, Clinton
Agree
Turner, Jon
Agreed

Second Revision No. 53-NFPA 1930-2024 [New Section after 3.3.157]

3.3.89 Passive Electrical Circuitry.

Electrical circuitry that has no integral power source and is energized by a supplemental device.

Submitter Information Verification

Committee: FAE-ELS
Submittal Date: Wed Mar 06 11:09:47 EST 2024

Committee Statement

Committee Statement: Adding to be consistent with NFPA 1970.
Response Message: SR-53-NFPA 1930-2024

Ballot Results

✔ **This item has passed ballot**

35 Eligible Voters
6 Not Returned
25 Affirmative All
4 Affirmative with Comments
0 Negative with Comments
0 Abstention

Not Returned

Cruger, Lorenzo
Herbert, Don
Storti, William
Vaughan, Christopher R.
Warle, Magnus
Worrell, Cody

Affirmative All

Agi, Kamil
Allen, Jason L.
Bahri, Albert J
Berney-Smith, Marcus
Brooks, Joseph Francis

Chavez, Louis

Connolly, James M.

Cook, Jeffrey Curtis

Donnelly, Michelle

Ericson, Dan

Forsyth, William

Gestler, Craig

Grove, Collin

Haase, Wayne C.

Hanna, Benjamin

Hussey, Michael C.

Lentz, Kevin D.

Little, David A.

McCarraher, Gary

McKenna, Michael F.

Quinn, Michael P.

Richardson, Michael T.

Sampl, Christopher M.

Seay, Angelina

Varner, Bruce H.

Affirmative with Comment

Morris, John H.

a

Namm, Joseph

accepted as is

Smith, Clinton

Section in spec and material correct, the SR-53 reference is incorrect should be 3.388 and not 3.3.157

Turner, Jon

Agreed

Second Revision No. 15-NFPA 1930-2024 [New Section after 5.2.7]

5.2.8

Equipment certified for use in hazardous locations shall be provided with at least the following information in user instructions or training materials:

(1) For thermal imagers and thermal imager accessories that are certified as nonincendive equipment, electrically interconnected types, the following:

(a) Identification as nonincendive equipment, electrically interconnected types

(b) Indication of the ability to interconnect with any other thermal imager and thermal imager accessories also certified and identified as nonincendive equipment, electrically interconnected types, in accordance with this standard

(2) For thermal imagers that are part of a nonincendive system, indication of the thermal imager accessories that comprise the nonincendive system in accordance with this standard

(3) For thermal imagers that are part of an intrinsically safe system, indication of the thermal imager accessories that comprise the intrinsically safe system in accordance with this standard

Submitter Information Verification

Committee: FAE-ELS

Submittal Date: Wed Feb 21 13:45:48 EST 2024

Committee Statement

Committee Statement: This user information is critical to the safe use of the equipment within the scope of the certification. Further, this addition aligns NFPA 1930 with the comparable text in NFPA 1970.

Response Message: SR-15-NFPA 1930-2024

Public Comment No. 4-NFPA 1930-2023 [New Section after 5.2.7]

Ballot Results

✔ **This item has passed ballot**

35 Eligible Voters
6 Not Returned
25 Affirmative All
4 Affirmative with Comments
0 Negative with Comments
0 Abstention

Not Returned

Cruger, Lorenzo

Herbert, Don

Storti, William

Vaughan, Christopher R.

Warle, Magnus

Worrell, Cody

Affirmative All

Agi, Kamil

Allen, Jason L.

Bahri, Albert J

Berney-Smith, Marcus

Brooks, Joseph Francis

Chavez, Louis

Connolly, James M.

Cook, Jeffrey Curtis

Donnelly, Michelle

Ericson, Dan

Forsyth, William

Gestler, Craig

Grove, Collin

Haase, Wayne C.

Hanna, Benjamin

Hussey, Michael C.

Lentz, Kevin D.

Little, David A.

McCarraher, Gary

McKenna, Michael F.

Quinn, Michael P.

Richardson, Michael T.

Sampl, Christopher M.

Seay, Angelina

Varner, Bruce H.

Affirmative with Comment

Morris, John H.

A

Namm, Joseph

accepted as is

Smith, Clinton

Agree

Turner, Jon

Agreed

Second Revision No. 1-NFPA 1930-2024 [Section No. 6.1.6]

6.1.6

~~Video~~ Thermal image video output shall be displayed on a display device consisting of at least 76,800 display pixels, where each display pixel can render all colors required in the standard.

6.1.6.1

Display devices consisting of more than 76,800 display pixels shall use at least 76,800 display pixels for the thermal image video output.

Submitter Information Verification

Committee: FAE-ELS

Submittal Date: Wed Feb 21 12:17:03 EST 2024

Committee Statement

Committee Statement: Clarifies that the thermal image needs to be displayed using at least the minimum number of pixels that are required for the sensor. This prevents the thermal image from being scaled down if screen space is used for objects other than the thermal image.

Response Message: SR-1-NFPA 1930-2024

Public Comment No. 35-NFPA 1930-2023 [New Section after 6.1.6]

Ballot Results

✔ **This item has passed ballot**

35 Eligible Voters
6 Not Returned
25 Affirmative All
4 Affirmative with Comments
0 Negative with Comments
0 Abstention

Not Returned

Cruger, Lorenzo
Herbert, Don
Storti, William
Vaughan, Christopher R.
Warle, Magnus
Worrell, Cody

Affirmative All

Agi, Kamil

Allen, Jason L.

Bahri, Albert J

Berney-Smith, Marcus

Brooks, Joseph Francis

Chavez, Louis

Connolly, James M.

Cook, Jeffrey Curtis

Donnelly, Michelle

Ericson, Dan

Forsyth, William

Gestler, Craig

Grove, Collin

Haase, Wayne C.

Hanna, Benjamin

Hussey, Michael C.

Lentz, Kevin D.

Little, David A.

McCarraher, Gary

McKenna, Michael F.

Quinn, Michael P.

Richardson, Michael T.

Sampl, Christopher M.

Seay, Angelina

Varner, Bruce H.

Affirmative with Comment

Morris, John H.

a

Namm, Joseph

accepted as is

Smith, Clinton

Agree

Turner, Jon

Agreed

Second Revision No. 2-NFPA 1930-2024 [New Section after 6.6.3.1.2]

6.6.3.1.3

Standard icons or symbols in the additional information area that do not overlay the thermal image shall be in contrast to their background.

Submitter Information Verification

Committee: FAE-ELS
Submittal Date: Wed Feb 21 12:26:02 EST 2024

Committee Statement

Committee Statement: Clarifies that when the additional information symbols are not displayed on top of the thermal image, they need to contrast the background to ensure they can be seen in different environments.

Response Message: SR-2-NFPA 1930-2024

Public Comment No. 36-NFPA 1930-2023 [New Section after 6.6.3.1.2]

Ballot Results

✔ **This item has passed ballot**

35 Eligible Voters
6 Not Returned
25 Affirmative All
4 Affirmative with Comments
0 Negative with Comments
0 Abstention

Not Returned

Cruger, Lorenzo
Herbert, Don
Storti, William
Vaughan, Christopher R.
Warle, Magnus
Worrell, Cody

Affirmative All

Agi, Kamil
Allen, Jason L.

Bahri, Albert J

Berney-Smith, Marcus

Brooks, Joseph Francis

Chavez, Louis

Connolly, James M.

Cook, Jeffrey Curtis

Donnelly, Michelle

Ericson, Dan

Forsyth, William

Gestler, Craig

Grove, Collin

Haase, Wayne C.

Hanna, Benjamin

Hussey, Michael C.

Lentz, Kevin D.

Little, David A.

McCarraher, Gary

McKenna, Michael F.

Quinn, Michael P.

Richardson, Michael T.

Sampl, Christopher M.

Seay, Angelina

Varner, Bruce H.

Affirmative with Comment

Morris, John H.

A

Namm, Joseph

accepted as is

Smith, Clinton

Agree

Turner, Jon

Agreed

Second Revision No. 3-NFPA 1930-2024 [New Section after 6.6.3.3]

6.6.3.3.1

Temperature-sensing indicators and heat color reference bar(s) that do not overlay the thermal image shall be in contrast to their background.

Submitter Information Verification

Committee: FAE-ELS
Submittal Date: Wed Feb 21 12:38:01 EST 2024

Committee Statement

Committee Statement: Clarifies that when the temperature sensing indicators and heat color reference bar are not displayed on top of the thermal image, they need to contrast the background to ensure they can be seen in different environments.

Response Message: SR-3-NFPA 1930-2024

Public Comment No. 37-NFPA 1930-2023 [New Section after 6.6.3.3]

Ballot Results

✔ **This item has passed ballot**

35 Eligible Voters
6 Not Returned
25 Affirmative All
4 Affirmative with Comments
0 Negative with Comments
0 Abstention

Not Returned

Cruger, Lorenzo
Herbert, Don
Storti, William
Vaughan, Christopher R.
Warle, Magnus
Worrell, Cody

Affirmative All

Agi, Kamil
Allen, Jason L.

Bahri, Albert J

Berney-Smith, Marcus

Brooks, Joseph Francis

Chavez, Louis

Connolly, James M.

Cook, Jeffrey Curtis

Donnelly, Michelle

Ericson, Dan

Forsyth, William

Gestler, Craig

Grove, Collin

Haase, Wayne C.

Hanna, Benjamin

Hussey, Michael C.

Lentz, Kevin D.

Little, David A.

McCarraher, Gary

McKenna, Michael F.

Quinn, Michael P.

Richardson, Michael T.

Sampl, Christopher M.

Seay, Angelina

Varner, Bruce H.

Affirmative with Comment

Morris, John H.

A

Namm, Joseph

accepted as is

Smith, Clinton

Agree

Turner, Jon

Agreed

Second Revision No. 5-NFPA 1930-2024 [Section No. 6.7.2.1]

See SR-6

6.7.2.1 General.

Thermal imagers and thermal imager accessories shall, at a minimum, be suitable for use in Class I, Division 2, Groups C and D; Class II, Division 2, Groups F and G; and Class III, Divisions 1 and 2 hazardous (classified) locations, ~~and~~ with a temperature class within the range of T3 through T6 inclusive in accordance with UL 121201, *Nonincendive Electrical Equipment for Use in Class I and II, Division 2 and Class III, Divisions 1 and 2 Hazardous (Classified) Locations* .

Submitter Information Verification

Committee: FAE-ELS

Submittal Date: Wed Feb 21 12:49:40 EST 2024

Committee Statement

Committee Statement: Thermal imagers rely on UL 121201 Ninth Edition as the HazLoc standard for nonincendive. Therefore, it needs to be included as a Normative reference here, not just in an Informative Annex. Further, this addition aligns with the comparable text in NFPA 1970.

Response Message: SR-5-NFPA 1930-2024

Public Comment No. 5-NFPA 1930-2023 [Section No. 6.7.2.1]

Ballot Results

✔ **This item has passed ballot**

35 Eligible Voters
6 Not Returned
25 Affirmative All
4 Affirmative with Comments
0 Negative with Comments
0 Abstention

Not Returned

Cruger, Lorenzo

Herbert, Don

Storti, William

Vaughan, Christopher R.

Warle, Magnus

Worrell, Cody

Affirmative All

Agi, Kamil

Allen, Jason L.

Bahri, Albert J

Berney-Smith, Marcus

Brooks, Joseph Francis

Chavez, Louis

Connolly, James M.

Cook, Jeffrey Curtis

Donnelly, Michelle

Ericson, Dan

Forsyth, William

Gestler, Craig

Grove, Collin

Haase, Wayne C.

Hanna, Benjamin

Hussey, Michael C.

Lentz, Kevin D.

Little, David A.

McCarraher, Gary

McKenna, Michael F.

Quinn, Michael P.

Richardson, Michael T.

Sampl, Christopher M.

Seay, Angelina

Varner, Bruce H.

Affirmative with Comment

Morris, John H.

A

Namm, Joseph

accepted as is

Smith, Clinton

Agree

Turner, Jon

Agreed

Second Revision No. 7-NFPA 1930-2024 [Section No. 6.7.2.2.2]

6.7.2.2.2

The electrical parameters for this interconnection shall be in accordance with Table 6.7.2.2.2.

Table 6.7.2.2.2 Electrical Parameters for Interconnection of Nonincendive Equipment, Electrically Interconnected Types

RFDC as source	Required relationship	RFDC as sink
Uo ≤ 8 V	Uo ≤ Ui	Ui ≥10 V ~~max~~
Io ≤ 500 mA	Io ≤ Ii	Ii ≥ 1 A ~~max~~
Co ≥ 69 µF	Co ≥ Ci + Ccable*	Ci ≤ 68 µF ~~max~~
Lo ≥ 320 µH	Lo ≥ Li + Lcable*	Li ≤ 315 µH ~~max~~

*Assumption for cable capacitance (Ccable) and cable inductance (Lcable): 200 pF/m and 1 µH/m respectively.

Submitter Information Verification

Committee: FAE-ELS
Submittal Date: Wed Feb 21 13:14:35 EST 2024

Committee Statement

Committee Statement: The "max" is unnecessary and adds no value. Further, this revision aligns with the comparable text in NFPA 1970.
Response Message: SR-7-NFPA 1930-2024

Public Comment No. 6-NFPA 1930-2023 [Section No. 6.7.2.2.2]

Ballot Results

✔ **This item has passed ballot**

35 Eligible Voters
6 Not Returned
25 Affirmative All
4 Affirmative with Comments
0 Negative with Comments
0 Abstention

Not Returned

Cruger, Lorenzo
Herbert, Don
Storti, William

Vaughan, Christopher R.
Warle, Magnus
Worrell, Cody

Affirmative All

Agi, Kamil
Allen, Jason L.
Bahri, Albert J
Berney-Smith, Marcus
Brooks, Joseph Francis
Chavez, Louis
Connolly, James M.
Cook, Jeffrey Curtis
Donnelly, Michelle
Ericson, Dan
Forsyth, William
Gestler, Craig
Grove, Collin
Haase, Wayne C.
Hanna, Benjamin
Hussey, Michael C.
Lentz, Kevin D.
Little, David A.
McCarraher, Gary
McKenna, Michael F.
Quinn, Michael P.
Richardson, Michael T.
Sampl, Christopher M.
Seay, Angelina
Varner, Bruce H.

Affirmative with Comment

Morris, John H.
A
Namm, Joseph
accepted as is
Smith, Clinton
Agree
Turner, Jon
Agreed

Second Revision No. 8-NFPA 1930-2024 [Section No. 6.7.2.3]

6.7.2.3 Interconnection of Nonincendive Systems.

Thermal imagers that are certified as part of a nonincendive system shall only be interconnected with thermal imager accessories also certified as part of the same nonincendive system.

Submitter Information Verification

Committee: FAE-ELS
Submittal Date: Wed Feb 21 13:18:17 EST 2024

Committee Statement

Committee Statement: This additional wording provides immediately apparent clarifying details regarding the area of concern. Further, this addition aligns with the comparable text in NFPA 1970.

Response Message: SR-8-NFPA 1930-2024

Public Comment No. 7-NFPA 1930-2023 [Section No. 6.7.2.3]

Ballot Results

✔ **This item has passed ballot**

35 Eligible Voters
6 Not Returned
25 Affirmative All
4 Affirmative with Comments
0 Negative with Comments
0 Abstention

Not Returned

Cruger, Lorenzo
Herbert, Don
Storti, William
Vaughan, Christopher R.
Warle, Magnus
Worrell, Cody

Affirmative All

Agi, Kamil

Allen, Jason L.
Bahri, Albert J
Berney-Smith, Marcus
Brooks, Joseph Francis
Chavez, Louis
Connolly, James M.
Cook, Jeffrey Curtis
Donnelly, Michelle
Ericson, Dan
Forsyth, William
Gestler, Craig
Grove, Collin
Haase, Wayne C.
Hanna, Benjamin
Hussey, Michael C.
Lentz, Kevin D.
Little, David A.
McCarraher, Gary
McKenna, Michael F.
Quinn, Michael P.
Richardson, Michael T.
Sampl, Christopher M.
Seay, Angelina
Varner, Bruce H.

Affirmative with Comment

Morris, John H.
A
Namm, Joseph
accepted as is
Smith, Clinton
Agree
Turner, Jon
Agreed

Second Revision No. 10-NFPA 1930-2024 [Section No. 6.7.3.1]

6.7.3.1

Thermal imagers and thermal imager accessories shall be permitted to be certified at a minimum for use in Class I, Division 1, Groups C and D; Class II, Division 1, Groups E, F, and G; Class III, Division 1 and 2 hazardous (classified) locations, ~~and~~ with a temperature class within the range of T3 through T6 inclusive in accordance with UL 913, *Intrinsically Safe Apparatus and Associated Apparatus for Use in Class I, II, and III, Division 1 Hazardous (Classified) Locations* .

~~**A.6.7.3.1**~~

~~This suitability is demonstrated by being certified as one of the following in accordance with ANSI/UL 913, *Intrinsically Safe Apparatus and Associated Apparatus for Use in Class I, II, and III, Division 1 Hazardous (Classified) Locations* :~~

~~Intrinsically safe apparatus, stand-alone type~~

~~Intrinsically safe system~~

Supplemental Information

File Name	Description	Approved
1930_SR-10_6.7.3.1.docx		

Submitter Information Verification

Committee: FAE-ELS

Submittal Date: Wed Feb 21 13:23:06 EST 2024

Committee Statement

Committee Statement: Thermal imagers rely on UL 913 Sixth Edition as the HazLoc standard for intrinsic safety. Therefore, it needs to be included as a Normative reference here, not just in an Informative Annex. Further, this addition aligns with the comparable text in NFPA 1970. Text added to 6.7.3.1 and 6.7.1, therefore this information was removed from the annex.

Response Message: SR-10-NFPA 1930-2024

Public Comment No. 25-NFPA 1930-2023 [Section No. A.6.7.3.1]

Public Comment No. 8-NFPA 1930-2023 [Section No. 6.7.3.1]

Ballot Results

✔ **This item has passed ballot**

35 Eligible Voters

6 Not Returned
25 Affirmative All
4 Affirmative with Comments
0 Negative with Comments
0 Abstention

Not Returned

Cruger, Lorenzo
Herbert, Don
Storti, William
Vaughan, Christopher R.
Warle, Magnus
Worrell, Cody

Affirmative All

Agi, Kamil
Allen, Jason L.
Bahri, Albert J
Berney-Smith, Marcus
Brooks, Joseph Francis
Chavez, Louis
Connolly, James M.
Cook, Jeffrey Curtis
Donnelly, Michelle
Ericson, Dan
Forsyth, William
Gestler, Craig
Grove, Collin
Haase, Wayne C.
Hanna, Benjamin
Hussey, Michael C.
Lentz, Kevin D.
Little, David A.
McCarraher, Gary
McKenna, Michael F.
Quinn, Michael P.
Richardson, Michael T.
Sampl, Christopher M.
Seay, Angelina
Varner, Bruce H.

Affirmative with Comment

Morris, John H.

A

Namm, Joseph

accepted as is

Smith, Clinton

Agree

Turner, Jon

Agreed

Second Revision No. 54-NFPA 1930-2024 [New Section after 6.7.3.2]

6.7.3.3

Passive electrical circuitry that relies on a supplemental device to energize it shall be exempt from explosion protection if the requirement in 6.7.3.3.1 is met.

6.7.3.3.1

The instructions supplied involving passive electrical circuitry shall indicate that the supplemental device used to energize the circuitry shall not be used or stored in a hazardous location unless certified for such use.

Submitter Information Verification

Committee: FAE-ELS
Submittal Date: Wed Mar 06 11:19:22 EST 2024

Committee Statement

Committee Statement: Adding to be consistent with NFPA 1970 and NFPA 1950.
Response Message: SR-54-NFPA 1930-2024

Ballot Results

✔ **This item has passed ballot**

35 Eligible Voters
6 Not Returned
25 Affirmative All
4 Affirmative with Comments
0 Negative with Comments
0 Abstention

Not Returned

Cruger, Lorenzo
Herbert, Don
Storti, William
Vaughan, Christopher R.
Warle, Magnus
Worrell, Cody

Affirmative All

Agi, Kamil
Allen, Jason L.

Bahri, Albert J

Berney-Smith, Marcus

Brooks, Joseph Francis

Chavez, Louis

Connolly, James M.

Cook, Jeffrey Curtis

Donnelly, Michelle

Ericson, Dan

Forsyth, William

Gestler, Craig

Grove, Collin

Haase, Wayne C.

Hanna, Benjamin

Hussey, Michael C.

Lentz, Kevin D.

Little, David A.

McCarraher, Gary

McKenna, Michael F.

Quinn, Michael P.

Richardson, Michael T.

Sampl, Christopher M.

Seay, Angelina

Varner, Bruce H.

Affirmative with Comment

Morris, John H.

A

Namm, Joseph

accepted as is

Smith, Clinton

Agree

Turner, Jon

Agreed

Second Revision No. 9-NFPA 1930-2024 [Section No. 6.7.3.2]

6.7.3.2 Interconnection of Intrinsically Safe Systems.

Thermal imagers that are certified as part of an intrinsically safe system shall only be interconnected with thermal imager accessories also certified as part of the same intrinsically safe system.

Submitter Information Verification

Committee: FAE-ELS
Submittal Date: Wed Feb 21 13:20:56 EST 2024

Committee Statement

Committee Statement: This additional wording provides immediately apparent clarifying details regarding the area of concern. Further, this addition aligns with the comparable text in NFPA 1970.

Response Message: SR-9-NFPA 1930-2024

Public Comment No. 9-NFPA 1930-2023 [Section No. 6.7.3.2]

Ballot Results

✔ **This item has passed ballot**

35 Eligible Voters
6 Not Returned
25 Affirmative All
4 Affirmative with Comments
0 Negative with Comments
0 Abstention

Not Returned

Cruger, Lorenzo
Herbert, Don
Storti, William
Vaughan, Christopher R.
Warle, Magnus
Worrell, Cody

Affirmative All

Agi, Kamil

Allen, Jason L.
Bahri, Albert J
Berney-Smith, Marcus
Brooks, Joseph Francis
Chavez, Louis
Connolly, James M.
Cook, Jeffrey Curtis
Donnelly, Michelle
Ericson, Dan
Forsyth, William
Gestler, Craig
Grove, Collin
Haase, Wayne C.
Hanna, Benjamin
Hussey, Michael C.
Lentz, Kevin D.
Little, David A.
McCarraher, Gary
McKenna, Michael F.
Quinn, Michael P.
Richardson, Michael T.
Sampl, Christopher M.
Seay, Angelina
Varner, Bruce H.

Affirmative with Comment

Morris, John H.
A
Namm, Joseph
accepted as is
Smith, Clinton
Agree
Turner, Jon
Agreed

Second Revision No. 77-NFPA 1930-2024 [Section No. 8.1.4.2]

8.1.4.2

The image recognition test apparatus shall consist of the following:

(1) A thermal imager positioning device

(2) A spatial resolution source target as specified in 8.1.4.3

(3) Ten temperature measurement devices as specified in 8.1.4.4

(4) Data acquisition software and hardware as specified in 8.1.4.5

(5) A visible spectrum camera and lens as specified in 8.1.4.7

(6) A visible spectrum camera mount as specified in 8.1.4.8

(7) A computer and image analysis software as specified in 8.1.4.9

(8)* ~~The computer image conversion software shall be ViewNX, version 2~~ A suitable application to convert RAW image files to 16-bit uncompressed color TIFF image file

A.8.1.4.2(8)

Nikon applications ViewNX and ViewNX2 are recommended for the Nikon D3/D3S cameras, ViewNX Studio is recommended for the Nikon Z7II.

8.1.4.2.1

The thermal imager shall be set up at a distance of 1 m ± 5 mm (39.3 in. ± .19 in.) from the outermost optical element to the image recognition target.

8.1.4.2.2

The ambient lighting in the testing room shall be 1 lux or less.

8.1.4.2.3

The test operator shall have visual acuity of at least 20/20 in each eye, uncorrected or corrected.

Submitter Information Verification

Committee: FAE-ELS

Submittal Date: Fri Apr 05 00:57:44 EDT 2024

Committee Statement

Committee Statement: Eliminating the confusion as to which tool works with which camera.

Response Message: SR-77-NFPA 1930-2024

Ballot Results

✔ **This item has passed ballot**

35 Eligible Voters
6 Not Returned
25 Affirmative All
4 Affirmative with Comments
0 Negative with Comments
0 Abstention

Not Returned

Cruger, Lorenzo
Herbert, Don
Storti, William
Vaughan, Christopher R.
Warle, Magnus
Worrell, Cody

Affirmative All

Agi, Kamil
Allen, Jason L.
Bahri, Albert J
Berney-Smith, Marcus
Brooks, Joseph Francis
Chavez, Louis
Connolly, James M.
Cook, Jeffrey Curtis
Donnelly, Michelle
Ericson, Dan
Forsyth, William
Gestler, Craig
Grove, Collin
Haase, Wayne C.
Hanna, Benjamin
Hussey, Michael C.
Lentz, Kevin D.
Little, David A.
McCarraher, Gary
McKenna, Michael F.
Quinn, Michael P.
Richardson, Michael T.
Sampl, Christopher M.
Seay, Angelina
Varner, Bruce H.

Affirmative with Comment

Morris, John H.

A

Namm, Joseph

accepted as is

Smith, Clinton

Agree

Turner, Jon

Agreed

Second Revision No. 25-NFPA 1930-2024 [Section No. 8.1.4.7 [Excluding any Sub-Sections]]

The visible spectrum camera shall be a Nikon D3, D3S, Z7 II, or an equivalent as needed to capture the thermal imager display. The equivalent camera shall be compatible with the settings specified in 8.1.4.7.3 or 8.1.4.7.4 . The lens shall be a Nikkor 60 mm, f/2.8 macro lens or equivalent . Other lenses of equivalent quality shall be permitted to be used in cases where the thermal imager display size or configuration is incompatible with the use of the Nikkor 60 mm, f/2.8. Both lens and camera chosen for use shall be compatible with the NFPA image testing software.

Submitter Information Verification

Committee: FAE-ELS
Submittal Date: Mon Mar 04 15:19:25 EST 2024

Committee Statement

Committee Statement: Adding the settings to allow for the use of the Z7 II camera.
Response Message: SR-25-NFPA 1930-2024

Ballot Results

✔ **This item has passed ballot**

35 Eligible Voters
6 Not Returned
25 Affirmative All
4 Affirmative with Comments
0 Negative with Comments
0 Abstention

Not Returned

Cruger, Lorenzo
Herbert, Don
Storti, William
Vaughan, Christopher R.
Warle, Magnus
Worrell, Cody

Affirmative All

Agi, Kamil
Allen, Jason L.

Bahri, Albert J

Berney-Smith, Marcus

Brooks, Joseph Francis

Chavez, Louis

Connolly, James M.

Cook, Jeffrey Curtis

Donnelly, Michelle

Ericson, Dan

Forsyth, William

Gestler, Craig

Grove, Collin

Haase, Wayne C.

Hanna, Benjamin

Hussey, Michael C.

Lentz, Kevin D.

Little, David A.

McCarraher, Gary

McKenna, Michael F.

Quinn, Michael P.

Richardson, Michael T.

Sampl, Christopher M.

Seay, Angelina

Varner, Bruce H.

Affirmative with Comment

Morris, John H.

A

Namm, Joseph

accepted as is

Smith, Clinton

Agree

Turner, Jon

Agreed

Second Revision No. 23-NFPA 1930-2024 [New Section after 8.1.4.7.3]

8.1.4.7.4

All Nikon Z7 II settings other than those specified below shall remain set at the factory default selections. The specific modifications to the Nikon Z7 II settings shall be as follows:

(1) Exterior (button and switch) settings:

(a) Right of Viewfinder — Set Photo/Movie Selector to Photography mode (top selection/camera illustration).

(b) Top-left dial — Mode Dial; hold down center release button and set to “M” (manual).

(c) Top-right scroll wheel — Adjust to change shutter speed.

(d) Top-right exposure button (+/-) illustration — Hold this button down and use the right-side scroll wheel to adjust the Exposure setting. Adjust exposure as necessary in conjunction with shutter speed per 8.1.4.7.4(4) .

(e) ISO button — Set ISO to 200, hold this button down and use the right-side scroll wheel to adjust the ISO setting and override the menu setting; keep Auto ISO off, hold down the ISO button and use the front scroll wheel to turn Auto ISO.

(f) Turn camera on.

(2) Shooting Menu:

(a) Reset shooting menu — No

(b) File naming — (N/A) (or DSC default)

(c) Primary slot selection — SD card slot

(d) Choose image area — FX (36 x 24)

(e) Image quality — NEF (RAW)

(f) Image size — RAW L

(g) NEF RAW recording — Type — Off; NEF (RAW) bit depth — 14 Bit

(h) ISO sensitivity settings — 200; Auto ISO sensitivity control — Off

(i) White balance — Direct sunlight

(j) Set picture control — Neutral

(k) Color space — sRGB

(l) Active D-lighting — Off

(m) Long exposure NR — Off

(n) High ISO NR — Off

(o) Vignette control — Normal

(p) Diffraction compensation — On

(q) Portrait impression balance — Off

(r) Metering — Matrix

(s) Focus mode — AF-S

(t) AF area mode — N/A

(u) Vibration reduction — Off

(v) Auto bracketing — AE/Flash

(w) Multiple exposure — Off

(x) HDR (high dynamic range) — Off

(y) Interval timer shooting — Off

(z) Focus shift shooting — Off

(3) Custom Setting Menu:

(a) Autofocus:

i. AF-C priority selection — Release

ii. AF-S priority selection — Focus

iii. Focus tracking with lock-on — 5

iv. Focus points used — All

v. Store points by orientation — No

vi. AF activation — Shutter/AF-On

vii. Limit AF-area mode selection — Select all

viii. Focus point wraparound — No wrap

ix. Focus point options — Manual focus mode — on; Dynamic area AF assist — on

x. Low light AF — Off

xi. Built-in AF assist illuminator — On

(b) Metering/Exposure:

i. EV steps for exposure cntrl — 1/3

ii. Easy exposure compensation — Off

iii. Center weighted area — Average

iv. Fine-tune optimal exposure — No, don't continue

(c) Timers/AE Lock:

i. Shutter release button/AE-L — Off

ii. Self-timer delay — 10 sec; Number of shots — 1; Interval between shots — .5s

iii. Power off delay — Playback — 20s; Menus — 1m; Image Review — 4s; Standby timer — 30s

(d) Shooting/Display:

i. CL mode shooting speed — 5fps

ii. Max continuous release — 130

iii. Sync. release mode options — Sync

iv. Exposure delay mode — Off

v. Shutter type — Auto

vi. Extended shutter speeds (M) — Off

vii. Limit selectable image area — Select all

viii. File number sequence — On

ix. Apply settings to live view — On

x. Warm display colors — Off

xi. Image frame — Off

xii. Framing grid display — Off

xiii. Focus peaking — Off

xiv. View all in continuous mode — On

(e) Bracketing/Flash:

i. Flash sync speed — 1/200

ii. Flash shutter speed — 1/60

iii. Exposure comp for flash — Entire frame

iv. Auto flash ISO sensitivity control — Subject and background

v. Modeling flash — On

vi. Auto bracketing (mode M) — Flash/speed

vii. Bracketing order — MTR > under > over

(f) Controls:

i. Customize *"i"* menu — Default

ii. Custom Controls — Default

iii. OK button — Default

iv. Shutter speed and aperture lock — Off

v. Customize command dials — Reverse rotation — No; Change main/sub — Off; Aperture setting — Subcommand dial; Menus and playback — Off

vi. Release button to use dial — No

vii. Reverse indicators — +,,,,,,|,,,,,,− (Positive left, Negative right — For exposure compensation); this is the brightness sensor

viii. Reverse ring for focus — Off

ix. Focus ring rotation range — N/A

x. Switch focus/control ring roles — Off

xi. Assign MB-11 buttons — Default

(4) The manual mode settings and calibration procedure shall be as follows:

(a) Turn Nikon on.

(b) Turn thermal imager on.

(c) Select "Manual" for the camera exposure mode.

(d) Thermal imager facing spatial resolution target as specified in 8.1.4.3 .

(e) Use front scroll wheel to adjust aperture setting on display to a minimum of "16" or f/16.

(f) EV value set to the center (Hold down the +/- button next to the trigger release and adjust using the rear scroll wheel.).

(g) Adjust the shutter speed with the rear scroll wheel such that the brightness sensor is in the middle ± 1 dot (⅓ of a tick) — this is one click with the scroll wheel.

(h) The refresh rate of the display of the thermal imager shall be provided by the manufacturer.

(i) The shutter speed shall be at least twice the refresh rate of the thermal imager and less than 3 seconds. If this cannot be met with f/16 aperture, adjust the aperture to the closest value to f/16 so that the conditions can be met.

(j) Use a suitable application to determine if there are areas within the regions of interest that either have lost highlights or lost shadows. Lost highlights represent areas of overexposure and lost shadows represent areas of underexposure. In the event that areas within the region of interest are overexposed or underexposed, adjust the EV button toward the negative or positive, respectively, to make the image darker or lighter. Once the EV value is changed, change the shutter speed accordingly to align the brightness sensor to center again. The EV compensation value shall be as close to 0 as possible.

Supplemental Information

File Name	Description	Approved
1930_SR-23_8.1.4.7.4-new.docx		

Submitter Information Verification

Committee: FAE-ELS

Submittal Date: Mon Mar 04 14:35:19 EST 2024

Committee Statement

Committee Statement: The revision of NFPA 1930 to allow a general "visible spectrum camera," instead of solely the Nikon D3, means other cameras can be used and adapted to the growing needs of Thermal Imager testing. One such camera, the Nikon Z7II, is slated to be used alongside the Nikon D3 moving forward. The use of this camera warrants the addition of settings to use with it, ensuring the repeatability of future testing and results. This also follows suit with Section 8.1.4.7.3 calling out the current Nikon D3's settings, for the same purpose.

Response Message: SR-23-NFPA 1930-2024

Public Comment No. 48-NFPA 1930-2024 [New Section after 8.1.4.7.3]

Ballot Results

✔ **This item has passed ballot**

35 Eligible Voters
6 Not Returned
25 Affirmative All
3 Affirmative with Comments
0 Negative with Comments
1 Abstention

Not Returned

Cruger, Lorenzo
Herbert, Don
Storti, William
Vaughan, Christopher R.
Warle, Magnus
Worrell, Cody

Affirmative All

Agi, Kamil
Allen, Jason L.
Bahri, Albert J
Berney-Smith, Marcus

Brooks, Joseph Francis
Chavez, Louis
Connolly, James M.
Cook, Jeffrey Curtis
Donnelly, Michelle
Ericson, Dan
Forsyth, William
Gestler, Craig
Grove, Collin
Haase, Wayne C.
Hanna, Benjamin
Hussey, Michael C.
Lentz, Kevin D.
Little, David A.
McCarraher, Gary
McKenna, Michael F.
Quinn, Michael P.
Richardson, Michael T.
Sampl, Christopher M.
Seay, Angelina
Varner, Bruce H.

Affirmative with Comment

Namm, Joseph
accepted as is
Smith, Clinton
Agree
Turner, Jon
Agreed

Abstention

Morris, John H.
Defer to more knowledgeable persons on camera settings.

Second Revision No. 26-NFPA 1930-2024 [Section No. 8.1.4.7.3]

8.1.4.7.3

All visible spectrum camera settings other than those specified in the following list shall remain set at the factory default selections. The specific modifications to the visible spectrum camera settings shall be as follows:

(1) Exterior (button and switch) settings:

(a) Release mode “S”.

(b) Focus mode “M” (manual).

(c) Right side of view finder — Metering mode: 3-D color matrix II.

(d) Bottom right of the LCD — Focus mode: single-point AF (bottom of 3). Operator shall press the OK button to automatically center the focus point to the center of the Nikon camera display.

(e) Camera shall be turned on.

(f) If the lens has vibration reduction control, it shall be turned off (interior menu settings). (Click menu button to left of LCD to enter menu.)

(2) Shooting menu:

(a) Shooting menu bank — A

(b) Reset shooting menu — No

(c) Active folder — (N/A)

(d) File naming — (N/A) (or DSC default)

(e) Slot 2 — Overflow

(f) Image quality — NEF (RAW)

(g) Image area — Auto DX crop — Off

(h) JPEG compression — Size priority

(i) NEF RAW recording — Type — Off; NEF (RAW) bit depth — 14 Bit

(j) White balance — Direct sunlight — Center color; A-B — 0; G-M — 0

(k) Set picture control — Neutral

(l) Manage picture control — (N/A)

(m) Color space — sRGB

(n) Active D-lighting — Off

(o) Vignette control — Normal

(p) Long exposure NR — Off

(q) High ISO NR — Off

(r) ISO sensitivity settings — ISO sensitivity — 200; ISO sensitivity auto control — Off

(s) Live view — Live view mode — tripod; release mode — Single frame

(t) Multiple exposure — Off

(u) Interval timer shooting — Off

(3) Custom setting menu:

(a) Autofocus:

i. AF-C priority selection — Release

ii. AF-S priority selection — Focus

iii. Dynamic AF area — 9 points

iv. Focus tracking with lock-on — Off

v. AF activation — Shutter/AF-On

vi. Focus point illumination — Manual focus mode — On; Continuous mode — On; Focus point brightness — 0 Normal

vii. Focus point wraparound — No wrap

viii. AF point selection — AF51

ix. AF On button — AF-On

x. Vertical AF On button — AF-On

(b) Metering/exposure:

i. ISO sensitivity step value — 1/3

ii. EV steps for exposure control — 1/3

iii. EV steps for exposure compensation — 1/3

iv. Easy exposure compensation — Off

v. Center weighted area — Average

vi. Fine tune optimal exposure — No, do not continue

(c) Timers/AE lock:

i. Shutter release button/AE-L — Off

ii. Auto meter–off delay — 6 sec

iii. Self-timer delay — 10 sec

iv. Monitor-off delay — 10 sec

(d) Shooting/display:

i. Beep — Off

ii. Shooting speed — Continuous high-speed — 9 fps

iii. Max continuous release — 130

iv. File number sequence — On

v. Control panel/viewfinder — Rear control panel — ISO sensitivity; viewfinder display — Frame count

vi. Shooting info display — Auto

vii. LCD illumination — Off

viii. Exposure delay mode — Off

(e) Bracketing/flash:

i. Flash sync speed — 1/250

ii. Flash shutter speed — 1/60

iii. Modeling flash — On

iv. Auto bracketing set — AE and flash

v. Auto bracketing (Model M) — Flash/speed

vi. Bracketing order — MTR > under > over

(f) “F” Controls:

i. Multi-selector center button — Shooting mode — Off; Playback mode — Thumbnail on/off

ii. Multi-selector — Do nothing

iii. Photo info/playback — Off

(4) The manual mode settings and calibration procedure shall be as follows:

(a) Turn visible spectrum camera on.

(b) Turn thermal imager on.

(c) Select “Manual” for the camera exposure mode.

(d) Set thermal imager facing spatial resolution target as specified in 8.1.4.3.

(e) Use scroll wheel to adjust aperture setting on display to “22” for f/22.

(f) Set EV value to the center. (Hold down the +/− button next to the trigger release and adjust using the rear scroll wheel.)

(g) Adjust the shutter speed with the rear scroll wheel such that the brightness sensor is in the middle ± 1 dot (⅓ of a tick) — this is one click with the scroll wheel.

(h) The refresh rate of the display of the thermal imager shall be provided by the manufacturer.

(i) The shutter speed shall be at least twice the refresh rate of the thermal imager and less than 3 seconds. If this cannot be met with f/22 aperture, adjust the aperture to the closest value to f/22 so that the conditions can be met.

(j) Use ~~ViewNX or ViewNX 2~~ a suitable application to determine if there are areas within the regions of interest (ROIs) that have either lost highlights or lost shadows. Lost highlights represent areas of overexposure, and lost shadows represent areas of underexposure. In the event that areas within the ROI are overexposed or underexposed, adjust the EV button toward the negative or positive, respectively, to make the image darker or lighter. Once the EV value is changed, change the shutter speed accordingly to align the brightness sensor to center again. The EV compensation value shall be as close to 0 as possible. *[See also, A.8.1.4.2(8) .]*

~~**A.8.1.4.7.3(4)(j)**~~

~~See~~ ~~A.8.1.4.2(8)~~ ~~.~~

Supplemental Information

File Name	Description	Approved
1930_SR-26_8.1.4.7.3.docx		

Submitter Information Verification

Committee: FAE-ELS
Submittal Date: Mon Mar 04 15:29:20 EST 2024

Committee Statement

Committee Statement: Allowing a suitable application for processing of the image.
Response Message: SR-26-NFPA 1930-2024

Ballot Results

✔ **This item has passed ballot**

35 Eligible Voters

6 Not Returned
25 Affirmative All
3 Affirmative with Comments
0 Negative with Comments
1 Abstention

Not Returned

Cruger, Lorenzo
Herbert, Don
Storti, William
Vaughan, Christopher R.
Warle, Magnus
Worrell, Cody

Affirmative All

Agi, Kamil
Allen, Jason L.
Bahri, Albert J
Berney-Smith, Marcus
Brooks, Joseph Francis
Chavez, Louis
Connolly, James M.
Cook, Jeffrey Curtis
Donnelly, Michelle
Ericson, Dan
Forsyth, William
Gestler, Craig
Grove, Collin
Haase, Wayne C.
Hanna, Benjamin
Hussey, Michael C.
Lentz, Kevin D.
Little, David A.
McCarraher, Gary
McKenna, Michael F.
Quinn, Michael P.
Richardson, Michael T.
Sampl, Christopher M.
Seay, Angelina
Varner, Bruce H.

Affirmative with Comment

Namm, Joseph

accepted as is

Smith, Clinton

Agree

Turner, Jon

Agreed

Abstention

Morris, John H.

Defer to more knowledgeable persons on camera settings.

Second Revision No. 27-NFPA 1930-2024 [Section No. 8.1.5.7]

8.1.5.7

The 16-bit color images captured from the visible spectrum camera shall be converted in image analysis software to uncompressed grayscale images having a minimum bit depth of 16 bits using Equation 8.1.5.7.

$$\text{Grayscale} = 0.30 \times \text{red} + 0.59 \times \text{green} + 0.11 \times \text{blue} \quad \textbf{[8.1.5.7]}$$

Submitter Information Verification

Committee: FAE-ELS
Submittal Date: Mon Mar 04 15:37:12 EST 2024

Committee Statement

Committee Statement: Adding clarification as to the applications of the tools for image analysis.
Response Message: SR-27-NFPA 1930-2024

Ballot Results

✔ **This item has passed ballot**

35 Eligible Voters
6 Not Returned
25 Affirmative All
4 Affirmative with Comments
0 Negative with Comments
0 Abstention

Not Returned

Cruger, Lorenzo
Herbert, Don
Storti, William
Vaughan, Christopher R.
Warle, Magnus
Worrell, Cody

Affirmative All

Agi, Kamil
Allen, Jason L.
Bahri, Albert J

Berney-Smith, Marcus
Brooks, Joseph Francis
Chavez, Louis
Connolly, James M.
Cook, Jeffrey Curtis
Donnelly, Michelle
Ericson, Dan
Forsyth, William
Gestler, Craig
Grove, Collin
Haase, Wayne C.
Hanna, Benjamin
Hussey, Michael C.
Lentz, Kevin D.
Little, David A.
McCarraher, Gary
McKenna, Michael F.
Quinn, Michael P.
Richardson, Michael T.
Sampl, Christopher M.
Seay, Angelina
Varner, Bruce H.

Affirmative with Comment

Morris, John H.
A
Namm, Joseph
accepted as is
Smith, Clinton
Agree
Turner, Jon
Agreed

Second Revision No. 28-NFPA 1930-2024 [Sections 8.1.5.10, 8.1.5.11]

8.1.5.10*

~~Two~~ Using image analysis software, two separate pixel smoothing filters shall be applied to the ROIs. A moving average in two dimensions shall be applied to the ROIs, with the average having a period equal to the horizontal distance and vertical distance of the thermal imager display pixels observed in the captured images. It shall be labeled the 1X filter. A second filter shall be applied in the same manner as the 1X filter but with a period four times greater and shall be labeled the 4X filter. Both filters shall be applied to the original image; the resulting images shall be labeled W_{1X}, W_{4X}, A_{1X}, and A_{4X}, and shall be stored independently for further calculation.

8.1.5.11

~~The image~~ Image ~~processing~~ analysis software shall scan each of the four ROIs for the lightest pixel intensity (I_{max}) and the darkest pixel intensity (I_{min}). The software shall then find the contrast of each of the four ROIs using Equation 8.1.5.11.

$$C = \frac{(I_{max} - I_{min})}{(I_{max} + I_{min})} \quad \textbf{[8.1.5.11]}$$

Submitter Information Verification

Committee: FAE-ELS
Submittal Date: Mon Mar 04 15:43:15 EST 2024

Committee Statement

Committee Statement: Adding clarification as to the applications of the tools for image analysis.
Response Message: SR-28-NFPA 1930-2024

Ballot Results

✔ **This item has passed ballot**

35 Eligible Voters
6 Not Returned
25 Affirmative All
4 Affirmative with Comments
0 Negative with Comments
0 Abstention

Not Returned

Cruger, Lorenzo
Herbert, Don
Storti, William

Vaughan, Christopher R.
Warle, Magnus
Worrell, Cody

Affirmative All

Agi, Kamil
Allen, Jason L.
Bahri, Albert J
Berney-Smith, Marcus
Brooks, Joseph Francis
Chavez, Louis
Connolly, James M.
Cook, Jeffrey Curtis
Donnelly, Michelle
Ericson, Dan
Forsyth, William
Gestler, Craig
Grove, Collin
Haase, Wayne C.
Hanna, Benjamin
Hussey, Michael C.
Lentz, Kevin D.
Little, David A.
McCarraher, Gary
McKenna, Michael F.
Quinn, Michael P.
Richardson, Michael T.
Sampl, Christopher M.
Seay, Angelina
Varner, Bruce H.

Affirmative with Comment

Morris, John H.
A
Namm, Joseph
accepted as is
Smith, Clinton
Agree
Turner, Jon
Agreed

Second Revision No. 29-NFPA 1930-2024 [Section No. 8.1.5.19 [Excluding any Sub-Sections]]

~~The~~ ~~data processing~~ Image analysis software shall analyze each row in the ROIs of the converging lines. For each row, the maximum pixel intensity and the minimum pixel intensity shall be recorded. They shall be labeled I_{max} and I_{min}, respectively. For each row, the contrast C_i shall be found using Equation 8.1.5.11.

Submitter Information Verification

Committee: FAE-ELS
Submittal Date: Mon Mar 04 15:47:02 EST 2024

Committee Statement

Committee Statement: Adding clarification as to the applications of the tools for image analysis.
Response Message: SR-29-NFPA 1930-2024

Ballot Results

✔ **This item has passed ballot**

35 Eligible Voters
6 Not Returned
25 Affirmative All
4 Affirmative with Comments
0 Negative with Comments
0 Abstention

Not Returned
Cruger, Lorenzo
Herbert, Don
Storti, William
Vaughan, Christopher R.
Warle, Magnus
Worrell, Cody

Affirmative All
Agi, Kamil
Allen, Jason L.
Bahri, Albert J

Berney-Smith, Marcus
Brooks, Joseph Francis
Chavez, Louis
Connolly, James M.
Cook, Jeffrey Curtis
Donnelly, Michelle
Ericson, Dan
Forsyth, William
Gestler, Craig
Grove, Collin
Haase, Wayne C.
Hanna, Benjamin
Hussey, Michael C.
Lentz, Kevin D.
Little, David A.
McCarraher, Gary
McKenna, Michael F.
Quinn, Michael P.
Richardson, Michael T.
Sampl, Christopher M.
Seay, Angelina
Varner, Bruce H.

Affirmative with Comment

Morris, John H.
A
Namm, Joseph
accepted as is
Smith, Clinton
Agree
Turner, Jon
Agreed

Second Revision No. 72-NFPA 1930-2024 [Section No. 9.1.1.4]

9.1.1.4*

~~Any accessories or enhancements built into, attached to, or sold with an~~ An RF device or RSM shall be tested with ~~those~~ any accessories ~~and enhancements installed~~ or enhancements, including, but not limited to, touch screens, cellular broadband, or WiFi built into, installed, or attached to the RF device or RSM, as specified in Table 9.4.9, to ensure the performance and functions of the RF device or RSM.

A.9.1.1.4

Accessories and enhancements such as touch screens, cellular broadband, or WiFi built into devices certified to this standard are not currently required to be tested. Design, performance, and testing of such capabilities might be addressed in future editions.

Submitter Information Verification

Committee: FAE-ELS

Submittal Date: Wed Mar 20 12:45:21 EDT 2024

Committee Statement

Committee Statement: Reworded to clarify what the device is tested with and clarifies the types of accessories and enhancements included while being tested. Annex material added to specifically state that the accessories and enhancements are not tested under this standard.

Response Message: SR-72-NFPA 1930-2024

Ballot Results

✔ **This item has passed ballot**

35 Eligible Voters
6 Not Returned
25 Affirmative All
4 Affirmative with Comments
0 Negative with Comments
0 Abstention

Not Returned

Cruger, Lorenzo

Herbert, Don

Storti, William

Vaughan, Christopher R.
Warle, Magnus
Worrell, Cody

Affirmative All

Agi, Kamil
Allen, Jason L.
Bahri, Albert J
Berney-Smith, Marcus
Brooks, Joseph Francis
Chavez, Louis
Connolly, James M.
Cook, Jeffrey Curtis
Donnelly, Michelle
Ericson, Dan
Forsyth, William
Gestler, Craig
Grove, Collin
Haase, Wayne C.
Hanna, Benjamin
Hussey, Michael C.
Lentz, Kevin D.
Little, David A.
McCarraher, Gary
McKenna, Michael F.
Quinn, Michael P.
Richardson, Michael T.
Sampl, Christopher M.
Seay, Angelina
Varner, Bruce H.

Affirmative with Comment

Morris, John H.
A
Namm, Joseph
accepted as is
Smith, Clinton
Agree
Turner, Jon
Agreed

Second Revision No. 59-NFPA 1930-2024 [Section No. 10.1.7 [Excluding any Sub-Sections]]

RF subscriber ensembles, RF devices, or RSMs originally certified to the previous edition of NFPA 1802 that have been upgraded to meet the 2025 edition of NFPA 1930 shall have the following statement legibly printed or displayed on a display at power up :

UPGRADED TO NFPA 1930, 2025 ED.

Submitter Information Verification

Committee: FAE-ELS
Submittal Date: Wed Mar 06 15:58:18 EST 2024

Committee Statement

Committee Statement: Provides flexibility for upgrades.
Response Message: SR-59-NFPA 1930-2024

Ballot Results

✔ **This item has passed ballot**

35 Eligible Voters
6 Not Returned
25 Affirmative All
3 Affirmative with Comments
0 Negative with Comments
1 Abstention

Not Returned

Cruger, Lorenzo
Herbert, Don
Storti, William
Vaughan, Christopher R.
Warle, Magnus
Worrell, Cody

Affirmative All

Agi, Kamil
Allen, Jason L.
Bahri, Albert J

Berney-Smith, Marcus
Brooks, Joseph Francis
Chavez, Louis
Connolly, James M.
Cook, Jeffrey Curtis
Donnelly, Michelle
Ericson, Dan
Forsyth, William
Gestler, Craig
Grove, Collin
Haase, Wayne C.
Hanna, Benjamin
Hussey, Michael C.
Lentz, Kevin D.
Little, David A.
McCarraher, Gary
McKenna, Michael F.
Quinn, Michael P.
Richardson, Michael T.
Sampl, Christopher M.
Seay, Angelina
Varner, Bruce H.

Affirmative with Comment

Namm, Joseph
accepted as is
Smith, Clinton
Agree
Turner, Jon
Agreed

Abstention

Morris, John H.
Users ok with change?

Second Revision No. 17-NFPA 1930-2024 [New Section after 10.2.5]

10.2.6

Equipment certified for use in hazardous locations shall be provided with at least the following information in user instructions or training materials:

(1) For RF devices and RSMs that are certified as nonincendive equipment, electrically interconnected types, the following:

(a) Identification as nonincendive equipment, electrically interconnected types

(b) Indication of the ability to interconnect with any other RF device and RSMs also certified and identified as nonincendive equipment, electrically interconnected types, in accordance with this standard

(2) For RF devices that are part of a nonincendive system, indication of the RSMs that comprise the nonincendive system in accordance with this standard.

(3) For RF devices that are part of an intrinsically safe system, indication of the RSMs that comprise the intrinsically safe system in accordance with this standard.

Submitter Information Verification

Committee: FAE-ELS

Submittal Date: Mon Mar 04 13:40:16 EST 2024

Committee Statement

Committee Statement: This user information is critical to the safe use of the equipment within the scope of the certification. Further, this addition aligns NFPA 1930 with the comparable text in NFPA 1970.

Response Message: SR-17-NFPA 1930-2024

Public Comment No. 10-NFPA 1930-2023 [New Section after 10.2.5]

Ballot Results

✔ **This item has passed ballot**

35 Eligible Voters
6 Not Returned
24 Affirmative All
5 Affirmative with Comments
0 Negative with Comments
0 Abstention

Not Returned

Cruger, Lorenzo

Herbert, Don

Storti, William

Vaughan, Christopher R.

Warle, Magnus

Worrell, Cody

Affirmative All

Agi, Kamil

Allen, Jason L.

Bahri, Albert J

Berney-Smith, Marcus

Brooks, Joseph Francis

Connolly, James M.

Cook, Jeffrey Curtis

Donnelly, Michelle

Ericson, Dan

Forsyth, William

Gestler, Craig

Grove, Collin

Haase, Wayne C.

Hanna, Benjamin

Hussey, Michael C.

Lentz, Kevin D.

Little, David A.

McCarraher, Gary

McKenna, Michael F.

Quinn, Michael P.

Richardson, Michael T.

Sampl, Christopher M.

Seay, Angelina

Varner, Bruce H.

Affirmative with Comment

Chavez, Louis

There appears to be an editorial oversight and misalignment between Chapter 10, Product Labeling and Information and Chapter 11, Design Requirements. In 10.2.6, option (2) needs to be deleted because it is not a permitted option per 11.23.1. Only options (1) and (3) in 10.2.6 are permitted by 11.23.1.

Morris, John H.

A

Namm, Joseph

accepted as is

Smith, Clinton

Agree

Turner, Jon

Agreed

Second Revision No. 65-NFPA 1930-2024 [Section No. 11.1.4]

11.1.4*

Transmission modes shall include, at a minimum, analog conventional FM and, ~~when~~ where required by the AHJ, P25 conventional transmission modes.

11.1.5

All ~~RF devices~~ displays shall have a visual indicator that displays the remaining capacity of the power source ~~when the RF device is powered on~~ .

11.1.5.1

The power source visual indicator shall display the state of the available capacity from full to nearly depleted as follows and as shown in Figure 11.1.5.1:

(1) Four segments displayed — 76 to 100 percent available power source (High) .

(2) Three segments displayed — 51 to 75 percent available power source (Medium) .

(3) Two segments displayed — 26 to 50 percent available power source (Low) .

(4) One segment displayed — 0 to 25 percent available power source (Critical) , which also includes the following:

(a) The power source visual indicator flashes when 25 percent or less capacity remains.

(b) The RF device emits ~~an~~ a ~~audible alert~~ recurring voice annunciation, ~~recurring every~~ "Battery critical," configurable by the AHJ at least every ~~2~~ 10 minutes when 25 percent or less capacity remains.

Figure 11.1.5.1 Power Source Visual Indicator.

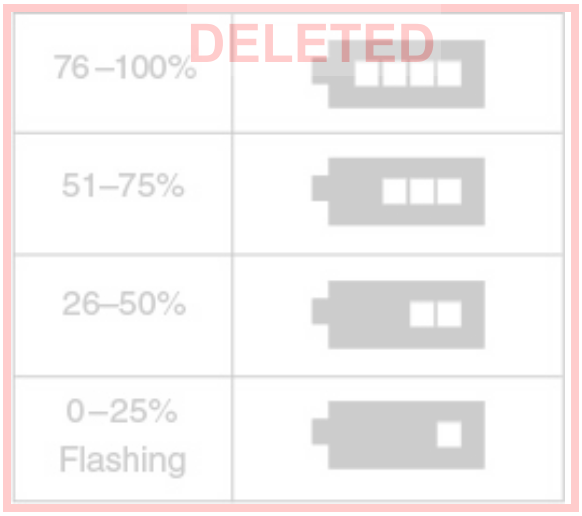

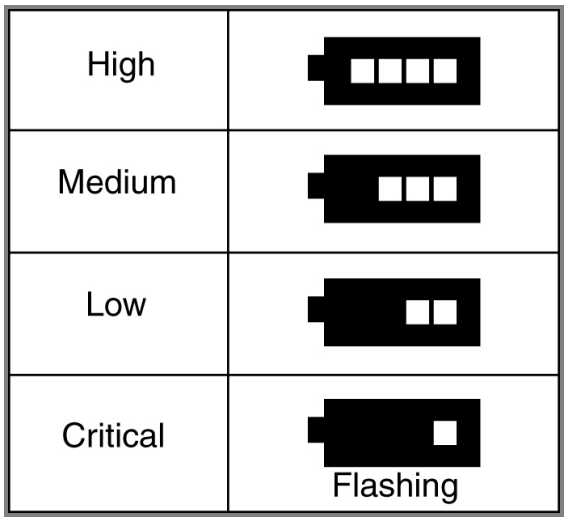

Supplemental Information

File Name	Description	Approved
1930_SR_65_11.1.4_and_new_11.1.5.docx		
1930_SR_65_11.1.4_and_new_11.1.5.docx	For prod use	

Submitter Information Verification

Committee: FAE-ELS

Submittal Date: Thu Mar 07 09:46:15 EST 2024

Committee Statement

Committee Statement: Created a separate section for power source visual indicators. Also added language to identify battery critical annunciation.

Response Message: SR-65-NFPA 1930-2024

Ballot Results

✔ **This item has passed ballot**

35 Eligible Voters
6 Not Returned
25 Affirmative All
4 Affirmative with Comments
0 Negative with Comments
0 Abstention

Not Returned

Cruger, Lorenzo
Herbert, Don
Storti, William
Vaughan, Christopher R.
Warle, Magnus
Worrell, Cody

Affirmative All

Agi, Kamil
Allen, Jason L.
Bahri, Albert J
Berney-Smith, Marcus
Brooks, Joseph Francis
Chavez, Louis
Connolly, James M.
Cook, Jeffrey Curtis
Donnelly, Michelle
Ericson, Dan
Forsyth, William
Gestler, Craig

Grove, Collin
Haase, Wayne C.
Hanna, Benjamin
Hussey, Michael C.
Lentz, Kevin D.
Little, David A.
McCarraher, Gary
McKenna, Michael F.
Quinn, Michael P.
Richardson, Michael T.
Sampl, Christopher M.
Seay, Angelina
Varner, Bruce H.

Affirmative with Comment

Morris, John H.
A
Namm, Joseph
accepted as is
Smith, Clinton
Agree
Turner, Jon
Agreed

Second Revision No. 57-NFPA 1930-2024 [Section No. 11.1.6]

11.1.7

All controls, input devices, and input methods shall be designed to prevent unintentional activation, deactivation, and change of operation.

Submitter Information Verification

Committee: FAE-ELS
Submittal Date: Wed Mar 06 15:01:07 EST 2024

Committee Statement

Committee Statement: Language added to address inadvertent operation of an input device.
Response Message: SR-57-NFPA 1930-2024

Ballot Results

✔ **This item has passed ballot**

35 Eligible Voters
6 Not Returned
25 Affirmative All
4 Affirmative with Comments
0 Negative with Comments
0 Abstention

Not Returned

Cruger, Lorenzo
Herbert, Don
Storti, William
Vaughan, Christopher R.
Warle, Magnus
Worrell, Cody

Affirmative All

Agi, Kamil
Allen, Jason L.
Bahri, Albert J
Berney-Smith, Marcus
Brooks, Joseph Francis

Chavez, Louis
Connolly, James M.
Cook, Jeffrey Curtis
Donnelly, Michelle
Ericson, Dan
Forsyth, William
Gestler, Craig
Grove, Collin
Haase, Wayne C.
Hanna, Benjamin
Hussey, Michael C.
Lentz, Kevin D.
Little, David A.
McCarraher, Gary
McKenna, Michael F.
Quinn, Michael P.
Richardson, Michael T.
Sampl, Christopher M.
Seay, Angelina
Varner, Bruce H.

Affirmative with Comment

Morris, John H.
A
Namm, Joseph
accepted as is
Smith, Clinton
Agree
Turner, Jon
Agreed

Second Revision No. 31-NFPA 1930-2024 [Section No. 11.2]

11.2 Hazard Zone Mode.

11.2.1 Capability.

11.2.1.1*

All RF devices shall be capable of both the hazard zone mode and the nonhazard zone mode.

11.2.1.2

Hazard zone mode shall be programmable to one or more channels, talkgroups, or talk paths as assigned by the AHJ.

11.2.1.2.1

Hazard zone mode shall be enabled each time a hazard-zone-assigned channel, talkgroup, or talk path is selected.

11.2.1.3

The RF device shall have the capability to toggle the hazard zone mode via a deliberate action, which is programmable by the AHJ.

11.2.2 Operation.

~~All RF devices shall have the capability to enable the nonhazard zone mode via programmable switch activation, or by being preprogrammed to a channel talkgroup or talk path.~~

11.2.2.1

The minimum volume of the RF device in the hazard zone mode shall be ~~24~~ 54 dBA , +6/-0 dB, where measured by the method specified in Section 2.1.20 of TIA-603-E, *Land Mobile FM or PM — Communications Equipment — Measurement and Performance Standards* . ~~+0/−6 dB, below the sound pressure level (SPL) as specified in 11.4.2 .~~

11.2.2.2*

The RF device in the hazard zone mode shall be capable of being programmed by the AHJ to be powered off with two separate actions.

~~**11.2.3**~~

~~When initially powered on, the RF device shall default to the hazard zone mode.~~

~~**11.2.3.1**~~

~~When powering on the RF device, the AHJ shall be permitted to enable the initial voice announcement sound level to be less than that specified in 11.12.5.1 by means of a second action in addition to adjusting the power/volume knob.~~

Supplemental Information

File Name	Description	Approved
1930_SR_31_11.2.docx		

Submitter Information Verification

Committee: FAE-ELS

Submittal Date: Tue Mar 05 15:54:44 EST 2024

Committee Statement

Committee Statement: The minimum volume level has been adjusted to help alleviate identified audio issues and gives AHJs more flexibility. Also, the ability to selectively toggle hazard zone mode, by switch or channel, will improve the experience of agencies with a limited number of tactical channels and reduce nuisance volume levels when powering up the radio for use in nonhazard zones.

Response Message: SR-31-NFPA 1930-2024

Public Comment No. 43-NFPA 1930-2023 [Section No. 11.2.1.2]

Public Comment No. 42-NFPA 1930-2023 [Section No. 11.2.2]

Public Comment No. 14-NFPA 1930-2023 [Section No. 11.2.3 [Excluding any Sub-Sections]]

Ballot Results

✔ **This item has passed ballot**

35 Eligible Voters
6 Not Returned
25 Affirmative All
4 Affirmative with Comments
0 Negative with Comments
0 Abstention

Not Returned

Cruger, Lorenzo
Herbert, Don
Storti, William
Vaughan, Christopher R.
Warle, Magnus
Worrell, Cody

Affirmative All

Agi, Kamil
Allen, Jason L.
Bahri, Albert J
Berney-Smith, Marcus
Brooks, Joseph Francis
Chavez, Louis
Connolly, James M.
Cook, Jeffrey Curtis
Donnelly, Michelle
Ericson, Dan
Forsyth, William
Gestler, Craig

Grove, Collin

Haase, Wayne C.

Hanna, Benjamin

Hussey, Michael C.

Lentz, Kevin D.

Little, David A.

McCarraher, Gary

McKenna, Michael F.

Quinn, Michael P.

Richardson, Michael T.

Sampl, Christopher M.

Seay, Angelina

Varner, Bruce H.

Affirmative with Comment

Morris, John H.

A

Namm, Joseph

accepted as is

Smith, Clinton

Agree

Turner, Jon

Agreed

Second Revision No. 58-NFPA 1930-2024 [Section No. 11.6.3]

11.6.3

~~The~~ All displays shall be capable of being backlit on the RF device that initiated the emergency mode, and ~~be backlit~~ on all RF devices that are receiving the emergency message, until reset in accordance with 11.8.9.

11.6.3.1

~~Display backlights required by this standard~~ All display backlights shall meet the design requirements of 11.15.1.1.

11.6.3.2

The backlight illumination time for an RF device receiving an emergency activation shall be programmable.

Submitter Information Verification

Committee: FAE-ELS
Submittal Date: Wed Mar 06 15:16:47 EST 2024

Committee Statement

Committee Statement: Changed to include all displays.
Response Message: SR-58-NFPA 1930-2024

Ballot Results

✔ **This item has passed ballot**

35 Eligible Voters
6 Not Returned
25 Affirmative All
3 Affirmative with Comments
1 Negative with Comments
0 Abstention

Not Returned

Cruger, Lorenzo
Herbert, Don
Storti, William
Vaughan, Christopher R.
Warle, Magnus
Worrell, Cody

Affirmative All

Agi, Kamil

Allen, Jason L.

Bahri, Albert J

Berney-Smith, Marcus

Brooks, Joseph Francis

Chavez, Louis

Connolly, James M.

Cook, Jeffrey Curtis

Donnelly, Michelle

Ericson, Dan

Forsyth, William

Gestler, Craig

Grove, Collin

Haase, Wayne C.

Hanna, Benjamin

Hussey, Michael C.

Lentz, Kevin D.

Little, David A.

McCarraher, Gary

McKenna, Michael F.

Quinn, Michael P.

Richardson, Michael T.

Sampl, Christopher M.

Seay, Angelina

Varner, Bruce H.

Affirmative with Comment

Namm, Joseph

accepted as is

Smith, Clinton

Agree

Turner, Jon

Agreed

Negative with Comment

Morris, John H.

"capable of being" from being required to be backlit. Is this correct?

Second Revision No. 70-NFPA 1930-2024 [Section No. 11.10.1.1]

11.10.1.1*

The RF device shall have an RFDC plug interface .

A.11.10.1.1

The AHJ has the option of not ordering the RFDC plug with the RF device.

Submitter Information Verification

Committee: FAE-ELS
Submittal Date: Wed Mar 20 11:51:11 EDT 2024

Committee Statement

Committee Statement: Providing option for AHJ to not receive the RFDC plug with the RF device. Also added "interface" to clarify the ability to connect to the RFDC.
Response Message: SR-70-NFPA 1930-2024

Ballot Results

This item has passed ballot

35 Eligible Voters
6 Not Returned
25 Affirmative All
4 Affirmative with Comments
0 Negative with Comments
0 Abstention

Not Returned

Cruger, Lorenzo
Herbert, Don
Storti, William
Vaughan, Christopher R.
Warle, Magnus
Worrell, Cody

Affirmative All

Agi, Kamil

Allen, Jason L.

Bahri, Albert J

Berney-Smith, Marcus

Brooks, Joseph Francis

Chavez, Louis

Connolly, James M.

Cook, Jeffrey Curtis

Donnelly, Michelle

Ericson, Dan

Forsyth, William

Gestler, Craig

Grove, Collin

Haase, Wayne C.

Hanna, Benjamin

Hussey, Michael C.

Lentz, Kevin D.

Little, David A.

McCarraher, Gary

McKenna, Michael F.

Quinn, Michael P.

Richardson, Michael T.

Sampl, Christopher M.

Seay, Angelina

Varner, Bruce H.

Affirmative with Comment

Morris, John H.

A

Namm, Joseph

accepted as is

Smith, Clinton

Agree

Turner, Jon

Agreed

Second Revision No. 74-NFPA 1930-2024 [New Section after 11.11]

11.12 Failure Detection of Antennas.

11.12.1

The RF device shall detect the failure of the primary antenna within 10 seconds of the failure in hazard zone mode.

11.12.1.1

When a failure as specified in 11.12.1 occurs, at a minimum, the RF device shall perform the following actions:

(1) An audible message, “Failed antenna,” shall be announced at maximum volume.

(2) A visual message, “FAIL ANT,” shall be displayed on all displays.

(3) A change to the backlight as specified in 11.16.1 shall occur.

11.12.1.2

Audible and visual messages specified in 11.12.1.1 shall be canceled when the user completes any of the following actions on the RF device:

(1) Power cycling the RF device

(2) Replacing the antenna

Submitter Information Verification

Committee: FAE-ELS

Submittal Date: Thu Mar 21 09:18:31 EDT 2024

Committee Statement

Committee Statement: Currently, antenna problems are only required to be detected every 5 minutes during the self-check. Detection of antenna failures needs to be done quicker, therefore the revision to within ten seconds is appropriate.

Response Message: SR-74-NFPA 1930-2024

Ballot Results

✔ **This item has passed ballot**

35 Eligible Voters
6 Not Returned
25 Affirmative All
4 Affirmative with Comments
0 Negative with Comments
0 Abstention

Not Returned

Cruger, Lorenzo

Herbert, Don

Storti, William

Vaughan, Christopher R.

Warle, Magnus

Worrell, Cody

Affirmative All

Agi, Kamil

Allen, Jason L.

Bahri, Albert J

Berney-Smith, Marcus

Brooks, Joseph Francis

Chavez, Louis

Connolly, James M.

Cook, Jeffrey Curtis

Donnelly, Michelle

Ericson, Dan

Forsyth, William

Gestler, Craig

Grove, Collin

Haase, Wayne C.

Hanna, Benjamin

Hussey, Michael C.

Lentz, Kevin D.

Little, David A.

McCarraher, Gary

McKenna, Michael F.

Quinn, Michael P.

Richardson, Michael T.

Sampl, Christopher M.

Seay, Angelina

Varner, Bruce H.

Affirmative with Comment

Morris, John H.

A

Namm, Joseph

accepted as is

Smith, Clinton

Agree

Turner, Jon

Agreed

Second Revision No. 30-NFPA 1930-2024 [Section No. 11.12.2.2.3]

11.13.2.2.3

Any overridden voice annunciation shall follow within 5 seconds of detecting the last PTT or received audio.

11.13.2.2.3.1

The RF device shall attempt to repeat overridden announcements a minimum of one time.

11.13.2.2.3.2

The number of attempts to repeat overridden announcements shall be configurable by the AHJ.

Submitter Information Verification

Committee: FAE-ELS
Submittal Date: Tue Mar 05 10:35:30 EST 2024

Committee Statement

Committee Statement: Adding TIA language to next edition.
Response Message: SR-30-NFPA 1930-2024

Public Comment No. 15-NFPA 1930-2023 [New Section after 11.12.2.2.3]

Ballot Results

✔ **This item has passed ballot**

35 Eligible Voters
6 Not Returned
25 Affirmative All
4 Affirmative with Comments
0 Negative with Comments
0 Abstention

Not Returned

Cruger, Lorenzo
Herbert, Don
Storti, William
Vaughan, Christopher R.
Warle, Magnus
Worrell, Cody

Affirmative All

Agi, Kamil

Allen, Jason L.

Bahri, Albert J

Berney-Smith, Marcus

Brooks, Joseph Francis

Chavez, Louis

Connolly, James M.

Cook, Jeffrey Curtis

Donnelly, Michelle

Ericson, Dan

Forsyth, William

Gestler, Craig

Grove, Collin

Haase, Wayne C.

Hanna, Benjamin

Hussey, Michael C.

Lentz, Kevin D.

Little, David A.

McCarraher, Gary

McKenna, Michael F.

Quinn, Michael P.

Richardson, Michael T.

Sampl, Christopher M.

Seay, Angelina

Varner, Bruce H.

Affirmative with Comment

Morris, John H.

A

Namm, Joseph

accepted as is

Smith, Clinton

Section in spec and material correct, the SR-30 reference is incorrect should be 11.13.2.2.3 and not 11.12.2.2.3

Turner, Jon

Agreed

Second Revision No. 68-NFPA 1930-2024 [Section No. 11.12.3.1]

11.13.3.1

In the event of simultaneous events, announcements shall be made according to the following list of precedence:

(1) Zone
(2) Channels, talkgroups, or talk paths
(3) Emergency, as specified in Section 11.8
(4) Failure of primary antenna as specified in Section 11.12
(5) Failure of an RSM as specified in Section 11.11
(6) Out of range, if applicable in accordance with Section 11.14
(7) Self-diagnostic failure as described in Section 11.18
(8) Battery level as specified in 11.1.5
(9) Power off

Submitter Information Verification

Committee: FAE-ELS
Submittal Date: Wed Mar 20 11:36:36 EDT 2024

Committee Statement

Committee Statement: Battery level needed to be added to order of announcement based on changes to 11.1.5. Also added failure of primary antenna.
Response Message: SR-68-NFPA 1930-2024

Ballot Results

✔ **This item has passed ballot**

35 Eligible Voters
6 Not Returned
25 Affirmative All
4 Affirmative with Comments
0 Negative with Comments
0 Abstention

Not Returned

Cruger, Lorenzo
Herbert, Don

Storti, William
Vaughan, Christopher R.
Warle, Magnus
Worrell, Cody

Affirmative All

Agi, Kamil
Allen, Jason L.
Bahri, Albert J
Berney-Smith, Marcus
Brooks, Joseph Francis
Chavez, Louis
Connolly, James M.
Cook, Jeffrey Curtis
Donnelly, Michelle
Ericson, Dan
Forsyth, William
Gestler, Craig
Grove, Collin
Haase, Wayne C.
Hanna, Benjamin
Hussey, Michael C.
Lentz, Kevin D.
Little, David A.
McCarraher, Gary
McKenna, Michael F.
Quinn, Michael P.
Richardson, Michael T.
Sampl, Christopher M.
Seay, Angelina
Varner, Bruce H.

Affirmative with Comment

Morris, John H.
A
Namm, Joseph
accepted as is
Smith, Clinton
Agree Section in spec and material correct, the SR-68 reference is incorrect
Turner, Jon
Agreed

Second Revision No. 69-NFPA 1930-2024 [Section No. 11.12.3.2]

11.13.3.2

~~Prerecorded~~ Context-appropriate prerecorded voice files, user-created or voice synthesis files, or any combination thereof, shall be permitted to be used for any voice announcement, as determined by the AHJ.

Submitter Information Verification

Committee: FAE-ELS
Submittal Date: Wed Mar 20 11:43:20 EDT 2024

Committee Statement

Committee Statement: Clarification within the language to include that the context shall remain the same.
Response Message: SR-69-NFPA 1930-2024

Ballot Results

✔ **This item has passed ballot**

35 Eligible Voters
6 Not Returned
25 Affirmative All
4 Affirmative with Comments
0 Negative with Comments
0 Abstention

Not Returned

Cruger, Lorenzo
Herbert, Don
Storti, William
Vaughan, Christopher R.
Warle, Magnus
Worrell, Cody

Affirmative All

Agi, Kamil
Allen, Jason L.
Bahri, Albert J
Berney-Smith, Marcus

Brooks, Joseph Francis
Chavez, Louis
Connolly, James M.
Cook, Jeffrey Curtis
Donnelly, Michelle
Ericson, Dan
Forsyth, William
Gestler, Craig
Grove, Collin
Haase, Wayne C.
Hanna, Benjamin
Hussey, Michael C.
Lentz, Kevin D.
Little, David A.
McCarraher, Gary
McKenna, Michael F.
Quinn, Michael P.
Richardson, Michael T.
Sampl, Christopher M.
Seay, Angelina
Varner, Bruce H.

Affirmative with Comment

Morris, John H.
A
Namm, Joseph
accepted as is
Smith, Clinton
Agree Section in spec and material correct, the SR-69 reference is incorrect
Turner, Jon
Agreed

Second Revision No. 32-NFPA 1930-2024 [Section No. 11.12.5.1 [Excluding any Sub-Sections]]

Channel, talkgroup, talk path voice announcements, and other preprogrammed voice announcements in the hazard zone mode and when transitioning from the hazard zone mode to the nonhazard zone mode shall be, at ~~a~~ minimum ~~of 82~~ 64 dBA ~~measured at 1 m, + 0.1/- 0 m, perpendicularly to the RF device speaker output with the sound level meter set to A-weighting with a fast response time (LAF)~~ , as measured in 11.2.2.1 .

Submitter Information Verification

Committee: FAE-ELS
Submittal Date: Tue Mar 05 16:11:00 EST 2024

Committee Statement

Committee Statement: The minimum volume level has been adjusted to help alleviate identified audio issues and gives AHJs more flexibility.
Response Message: SR-32-NFPA 1930-2024

Public Comment No. 44-NFPA 1930-2023 [Section No. 11.12.5.1 [Excluding any Sub-Sections]]

Ballot Results

✔ **This item has passed ballot**

35 Eligible Voters
6 Not Returned
25 Affirmative All
4 Affirmative with Comments
0 Negative with Comments
0 Abstention

Not Returned

Cruger, Lorenzo
Herbert, Don
Storti, William
Vaughan, Christopher R.
Warle, Magnus
Worrell, Cody

Affirmative All

Agi, Kamil

Allen, Jason L.

Bahri, Albert J

Berney-Smith, Marcus

Brooks, Joseph Francis

Chavez, Louis

Connolly, James M.

Cook, Jeffrey Curtis

Donnelly, Michelle

Ericson, Dan

Forsyth, William

Gestler, Craig

Grove, Collin

Haase, Wayne C.

Hanna, Benjamin

Hussey, Michael C.

Lentz, Kevin D.

Little, David A.

McCarraher, Gary

McKenna, Michael F.

Quinn, Michael P.

Richardson, Michael T.

Sampl, Christopher M.

Seay, Angelina

Varner, Bruce H.

Affirmative with Comment

Morris, John H.

A

Namm, Joseph

11.13.5.1 references the test method called out in 11.2.2.1. This method is TIA 603 which specifies a 1kHz, 60% deviation standard input signal at 50cm. The purpose of 11.13.5.1 is to measure voice announcements not externally modulated RF signal audio. The reference to TIA-603 doesn't make sense and should be removed. I believe the intent here is to update the measurement distance to 50cm and measure the voice announcement at that distance.

Smith, Clinton

wrong section reference in ballot but correct in revised spec. Should be 11.13.5.1 and not 11.12.5.1

Turner, Jon

Agreed

Second Revision No. 73-NFPA 1930-2024 [Section No. 11.14.1.2]

11.15.1.2

The RF device shall~~, within one (1) minute of detecting out-of-range and loss of connection to a system,~~ display the following indications:

(1) All displays shall be backlit-flashing red when the RF device is out of range.

(2) The RF device shall emit an audible tone every 15 seconds ± 1 second, and the tone shall last 1 second, +0.5/−0 second, at 70 percent of factory set max volume level.

Submitter Information Verification

Committee: FAE-ELS
Submittal Date: Wed Mar 20 13:25:04 EDT 2024

Committee Statement

Committee Statement: Removing redundant language.
Response Message: SR-73-NFPA 1930-2024

Ballot Results

✔ **This item has passed ballot**

35 Eligible Voters
6 Not Returned
25 Affirmative All
3 Affirmative with Comments
1 Negative with Comments
0 Abstention

Not Returned

Cruger, Lorenzo
Herbert, Don
Storti, William
Vaughan, Christopher R.
Warle, Magnus
Worrell, Cody

Affirmative All

Agi, Kamil
Allen, Jason L.

Bahri, Albert J

Berney-Smith, Marcus

Brooks, Joseph Francis

Chavez, Louis

Connolly, James M.

Cook, Jeffrey Curtis

Donnelly, Michelle

Ericson, Dan

Forsyth, William

Gestler, Craig

Grove, Collin

Haase, Wayne C.

Hanna, Benjamin

Hussey, Michael C.

Lentz, Kevin D.

Little, David A.

McCarraher, Gary

McKenna, Michael F.

Quinn, Michael P.

Richardson, Michael T.

Sampl, Christopher M.

Seay, Angelina

Varner, Bruce H.

Affirmative with Comment

Namm, Joseph

accepted as is

Smith, Clinton

Agree Section in spec and material correct, the SR-73 reference is incorrect

Turner, Jon

Agreed

Negative with Comment

Morris, John H.

Wording ensures it is displayed within time limit. Should previous section be changed to detected and displayed?

Second Revision No. 76-NFPA 1930-2024 [Section No. 11.15.1]

11.16.1 ~~LEDs.~~

~~All LEDs and display backlights on the~~ The RF device, displays, and capable RSMs shall illuminate as indicated during the following event conditions:

(1) Emergency: indicated by flashing orange when an emergency alarm signal is initiated; indicated by flashing red when an emergency alarm signal is received

(2) Antenna failure: indicated by solid orange as specified in Section 11.12

(3) Connected RSM failure: indicated by solid orange ~~within one (1) second of detecting a failure~~ as specified in 11.11.1

(4) Over-temperature: indicated by solid orange ~~immediately upon detecting an internal over-temperature event~~ as specified in Section 11.17

(5) Out-of-range: indicated by flashing yellow ~~within one (1) minute of detecting out-of-range~~ as specified in Section 11.15

(6) Transmit and receive LED: receive, indicated by solid green; transmit, indicated by solid red

(7) Self-check fail: indicated by solid red

11.16.2

LEDs shall have the following operational states:

(1) ON: LED is continuously illuminated

(2) OFF: LED is not illuminated

(3) FLASHING: LED provides a continuous sequence of On/Off illumination states at a 1 Hz frequency and 50 percent duty cycle.

11.16.3 Bluetooth® .

Continuous blue shall indicate the Bluetooth link is paired and active.

Supplemental Information

File Name	Description	Approved
1930_SR-76_11.15.1.docx		

Submitter Information Verification

Committee: FAE-ELS

Submittal Date: Fri Apr 05 00:49:57 EDT 2024

Committee Statement

Committee Statement: Cleans up language for visible event indicators and added self-check from 11.17.1.2. Also added antenna failure.

Response Message: SR-76-NFPA 1930-2024

Ballot Results

✔ **This item has passed ballot**

35 Eligible Voters
6 Not Returned
25 Affirmative All
4 Affirmative with Comments
0 Negative with Comments
0 Abstention

Not Returned

Cruger, Lorenzo
Herbert, Don
Storti, William
Vaughan, Christopher R.
Warle, Magnus
Worrell, Cody

Affirmative All

Agi, Kamil
Allen, Jason L.
Bahri, Albert J
Berney-Smith, Marcus
Brooks, Joseph Francis
Chavez, Louis
Connolly, James M.
Cook, Jeffrey Curtis
Donnelly, Michelle
Ericson, Dan
Forsyth, William
Gestler, Craig
Grove, Collin
Haase, Wayne C.
Hanna, Benjamin
Hussey, Michael C.
Lentz, Kevin D.
Little, David A.
McCarraher, Gary
McKenna, Michael F.
Quinn, Michael P.
Richardson, Michael T.

Sampl, Christopher M.

Seay, Angelina

Varner, Bruce H.

Affirmative with Comment

Morris, John H.

A

Namm, Joseph

accepted as is

Smith, Clinton

Agree Section in spec and material correct, the SR-76 reference is incorrect

Turner, Jon

Agreed

Second Revision No. 62-NFPA 1930-2024 [Section No. 11.17.1.1]

11.18.1.1

The RF device shall display a visual indication when it has failed the self-check as required in Section 11.16 .

Submitter Information Verification

Committee: FAE-ELS
Submittal Date: Thu Mar 07 08:37:31 EST 2024

Committee Statement

Committee Statement: Reference to the visible event indicators added.
Response Message: SR-62-NFPA 1930-2024

Ballot Results

✔ **This item has passed ballot**

35 Eligible Voters
6 Not Returned
25 Affirmative All
4 Affirmative with Comments
0 Negative with Comments
0 Abstention

Not Returned

Cruger, Lorenzo
Herbert, Don
Storti, William
Vaughan, Christopher R.
Warle, Magnus
Worrell, Cody

Affirmative All

Agi, Kamil
Allen, Jason L.
Bahri, Albert J
Berney-Smith, Marcus
Brooks, Joseph Francis

Chavez, Louis
Connolly, James M.
Cook, Jeffrey Curtis
Donnelly, Michelle
Ericson, Dan
Forsyth, William
Gestler, Craig
Grove, Collin
Haase, Wayne C.
Hanna, Benjamin
Hussey, Michael C.
Lentz, Kevin D.
Little, David A.
McCarraher, Gary
McKenna, Michael F.
Quinn, Michael P.
Richardson, Michael T.
Sampl, Christopher M.
Seay, Angelina
Varner, Bruce H.

Affirmative with Comment

Morris, John H.
A
Namm, Joseph
accepted as is
Smith, Clinton
Agree Section in spec and material correct, the SR-62 reference is incorrect
Turner, Jon
Agreed

Second Revision No. 61-NFPA 1930-2024 [Section No. 11.17.1.2]

~~**11.18.1.2**~~

~~The display shall be backlit red when the RF device does not pass the self-check.~~

Submitter Information Verification

Committee: FAE-ELS
Submittal Date: Thu Mar 07 08:19:14 EST 2024

Committee Statement

Committee Statement: Removed because this will be addressed in 11.15.1.1 with the other visible event indicators.
Response Message: SR-61-NFPA 1930-2024

Ballot Results

✔ **This item has passed ballot**

35 Eligible Voters
6 Not Returned
25 Affirmative All
3 Affirmative with Comments
1 Negative with Comments
0 Abstention

Not Returned

Cruger, Lorenzo
Herbert, Don
Storti, William
Vaughan, Christopher R.
Warle, Magnus
Worrell, Cody

Affirmative All

Agi, Kamil
Allen, Jason L.
Bahri, Albert J
Berney-Smith, Marcus
Brooks, Joseph Francis

Chavez, Louis

Connolly, James M.

Cook, Jeffrey Curtis

Donnelly, Michelle

Ericson, Dan

Forsyth, William

Gestler, Craig

Grove, Collin

Haase, Wayne C.

Hanna, Benjamin

Hussey, Michael C.

Lentz, Kevin D.

Little, David A.

McCarraher, Gary

McKenna, Michael F.

Quinn, Michael P.

Richardson, Michael T.

Sampl, Christopher M.

Seay, Angelina

Varner, Bruce H.

Affirmative with Comment

Namm, Joseph

accepted as is

Smith, Clinton

Agree Section in spec and material correct, the SR-61 reference is incorrect as is committee statement reference

Turner, Jon

Agreed

Negative with Comment

Morris, John H.

Isn't self check separate from other indicators?

Second Revision No. 33-NFPA 1930-2024 [Section No. 11.17.2]

11.18.2

The following functions shall be tested in self-check:

(1)* RSM connectivity to the RF device

(2) Loss of antenna connection to the RF device

(3) Temperature exposure over manufacturer recommended overheat temperature

~~Battery with at least 50 percent of the total capacity available (power-up only)~~

Submitter Information Verification

Committee: FAE-ELS

Submittal Date: Tue Mar 05 16:22:17 EST 2024

Committee Statement

Committee Statement: Battery levels below 50% occur much more frequently than other self check failures. A battery with six hours of capacity remaining is not equivalent to other potential self check failures. Since firefighters are not typically looking at a display screen, they are likely to ignore frequent self check failures. This can result in critical self check failures such as loss of antenna connection to be ignored. Battery level announcements should be separate and distinct from self check failures.

Response Message: SR-33-NFPA 1930-2024

Public Comment No. 40-NFPA 1930-2023 [Section No. 11.17.2]

Ballot Results

✔ **This item has passed ballot**

35 Eligible Voters
6 Not Returned
25 Affirmative All
4 Affirmative with Comments
0 Negative with Comments
0 Abstention

Not Returned

Cruger, Lorenzo

Herbert, Don

Storti, William

Vaughan, Christopher R.

Warle, Magnus
Worrell, Cody

Affirmative All

Agi, Kamil
Allen, Jason L.
Bahri, Albert J
Berney-Smith, Marcus
Brooks, Joseph Francis
Chavez, Louis
Connolly, James M.
Cook, Jeffrey Curtis
Donnelly, Michelle
Ericson, Dan
Forsyth, William
Gestler, Craig
Grove, Collin
Haase, Wayne C.
Hanna, Benjamin
Hussey, Michael C.
Lentz, Kevin D.
Little, David A.
McCarraher, Gary
McKenna, Michael F.
Quinn, Michael P.
Richardson, Michael T.
Sampl, Christopher M.
Seay, Angelina
Varner, Bruce H.

Affirmative with Comment

Morris, John H.
A
Namm, Joseph
accepted as is
Smith, Clinton
Agree
Turner, Jon
Agreed

Second Revision No. 34-NFPA 1930-2024 [New Section after 11.17.3]

11.18.4

On power up, the RF device shall voice announce the battery level range consistent with 11.1.5.1 :

(1) High

(2) Medium

(3) Low

(4) Critical

Submitter Information Verification

Committee: FAE-ELS

Submittal Date: Tue Mar 05 16:26:42 EST 2024

Committee Statement

Committee Statement: This revision provides more definitive information on battery status when the RF device is powered up. This provides the user with helpful data on the status of their radio battery on start-up and does not confuse users with other critical self-check failures.

Response Message: SR-34-NFPA 1930-2024

Public Comment No. 41-NFPA 1930-2023 [New Section after 11.17.3]

Ballot Results

✔ **This item has passed ballot**

35 Eligible Voters
6 Not Returned
25 Affirmative All
4 Affirmative with Comments
0 Negative with Comments
0 Abstention

Not Returned

Cruger, Lorenzo

Herbert, Don

Storti, William

Vaughan, Christopher R.

Warle, Magnus

Worrell, Cody

Affirmative All

Agi, Kamil
Allen, Jason L.
Bahri, Albert J
Berney-Smith, Marcus
Brooks, Joseph Francis
Chavez, Louis
Connolly, James M.
Cook, Jeffrey Curtis
Donnelly, Michelle
Ericson, Dan
Forsyth, William
Gestler, Craig
Grove, Collin
Haase, Wayne C.
Hanna, Benjamin
Hussey, Michael C.
Lentz, Kevin D.
Little, David A.
McCarraher, Gary
McKenna, Michael F.
Quinn, Michael P.
Richardson, Michael T.
Sampl, Christopher M.
Seay, Angelina
Varner, Bruce H.

Affirmative with Comment

Morris, John H.
A
Namm, Joseph
accepted as is
Smith, Clinton
Agree Section in spec and material correct, the SR-34 reference is incorrect
Turner, Jon
Agreed

Second Revision No. 66-NFPA 1930-2024 [Section No. 11.19.1.2]

11.20.1.2

At a minimum, each of the following events shall be identified, recorded, and date and time stamped in coordinated universal time in the data log:

(1) RF device is turned on.

(2) Emergency button is activated.

(3) User input, button press, or switch is activated.

(4) Power source levels are at initial power on and then at 75 percent, 50 percent, 25 percent, 10 percent, and 5 percent capacity.

(5) RF device is turned off.

(6) Channel, talkgroup, talk path, zone, mode, deck, bank, or mission plan is selected.

(7) Internal electronics temperature ~~exceeded~~ exceeds or is less than the limit specified by the manufacturer.

(8) RSM failure or disconnection.

(9) Antenna failure or disconnection.

(10) Bluetooth device connected and disconnected, with friendly name.

(11) In/out of range of a system.

(12) Detectable PTT rejection with rejecting channel, talk group, or talk path also logged.

Submitter Information Verification

Committee: FAE-ELS

Submittal Date: Thu Mar 07 11:25:22 EST 2024

Committee Statement

Committee Statement: Additional items are already detected by the RF device and create visual or audible event indicators. These are addressed in 11.13, 11.14, 11.15, 11.16, and should be logged in the data log for post event review.

Response Message: SR-66-NFPA 1930-2024

Ballot Results

✔ **This item has passed ballot**

35 Eligible Voters
6 Not Returned
25 Affirmative All
4 Affirmative with Comments
0 Negative with Comments

0 Abstention

Not Returned

Cruger, Lorenzo
Herbert, Don
Storti, William
Vaughan, Christopher R.
Warle, Magnus
Worrell, Cody

Affirmative All

Agi, Kamil
Allen, Jason L.
Bahri, Albert J
Berney-Smith, Marcus
Brooks, Joseph Francis
Chavez, Louis
Connolly, James M.
Cook, Jeffrey Curtis
Donnelly, Michelle
Ericson, Dan
Forsyth, William
Gestler, Craig
Grove, Collin
Haase, Wayne C.
Hanna, Benjamin
Hussey, Michael C.
Lentz, Kevin D.
Little, David A.
McCarraher, Gary
McKenna, Michael F.
Quinn, Michael P.
Richardson, Michael T.
Sampl, Christopher M.
Seay, Angelina
Varner, Bruce H.

Affirmative with Comment

Morris, John H.
A

Namm, Joseph
accepted as is
Smith, Clinton
Agree Section in spec and material correct, the SR-66 reference is incorrect
Turner, Jon
Agreed

Second Revision No. 60-NFPA 1930-2024 [Section No. 11.19.2]

11.20.2

The data logging information shall be downloadable by the emergency services organization.

11.20.2.1

When the datalog is downloaded, the compliance statement as shown in 10.1.6 or 10.1.7 shall be included.

Submitter Information Verification

Committee: FAE-ELS
Submittal Date: Wed Mar 06 16:35:31 EST 2024

Committee Statement

Committee Statement: Ensures the current compliance statement is included.
Response Message: SR-60-NFPA 1930-2024

Ballot Results

✔ **This item has passed ballot**

35 Eligible Voters
6 Not Returned
25 Affirmative All
4 Affirmative with Comments
0 Negative with Comments
0 Abstention

Not Returned

Cruger, Lorenzo
Herbert, Don
Storti, William
Vaughan, Christopher R.
Warle, Magnus
Worrell, Cody

Affirmative All

Agi, Kamil
Allen, Jason L.
Bahri, Albert J

Berney-Smith, Marcus

Brooks, Joseph Francis

Chavez, Louis

Connolly, James M.

Cook, Jeffrey Curtis

Donnelly, Michelle

Ericson, Dan

Forsyth, William

Gestler, Craig

Grove, Collin

Haase, Wayne C.

Hanna, Benjamin

Hussey, Michael C.

Lentz, Kevin D.

Little, David A.

McCarraher, Gary

McKenna, Michael F.

Quinn, Michael P.

Richardson, Michael T.

Sampl, Christopher M.

Seay, Angelina

Varner, Bruce H.

Affirmative with Comment

Morris, John H.

A

Namm, Joseph

accepted as is

Smith, Clinton

Agree Section in spec and material correct, the SR-60 reference is incorrect

Turner, Jon

Agreed

Second Revision No. 67-NFPA 1930-2024 [Section No. 11.19.3]

11.20.3

The data logging shall have a minimum capacity of logging the ~~2000~~ 5000 most-recent events.

Submitter Information Verification

Committee: FAE-ELS
Submittal Date: Thu Mar 07 11:29:19 EST 2024

Committee Statement

Committee Statement: Ensure datalog has a large enough capacity to record additional logged events.
Response Message: SR-67-NFPA 1930-2024

Ballot Results

✔ **This item has passed ballot**

35 Eligible Voters
6 Not Returned
25 Affirmative All
4 Affirmative with Comments
0 Negative with Comments
0 Abstention

Not Returned

Cruger, Lorenzo
Herbert, Don
Storti, William
Vaughan, Christopher R.
Warle, Magnus
Worrell, Cody

Affirmative All

Agi, Kamil
Allen, Jason L.
Bahri, Albert J
Berney-Smith, Marcus

Brooks, Joseph Francis

Chavez, Louis

Connolly, James M.

Cook, Jeffrey Curtis

Donnelly, Michelle

Ericson, Dan

Forsyth, William

Gestler, Craig

Grove, Collin

Haase, Wayne C.

Hanna, Benjamin

Hussey, Michael C.

Lentz, Kevin D.

Little, David A.

McCarraher, Gary

McKenna, Michael F.

Quinn, Michael P.

Richardson, Michael T.

Sampl, Christopher M.

Seay, Angelina

Varner, Bruce H.

Affirmative with Comment

Morris, John H.

A

Namm, Joseph

accepted as is

Smith, Clinton

Agree Section in spec and material correct, the SR-67 reference is incorrect

Turner, Jon

Agreed

Second Revision No. 18-NFPA 1930-2024 [Section No. 11.22.2 [Excluding any Sub-Sections]]

RF devices and RSMs shall, at a minimum, be suitable for use in Class I, Division 2, Groups C and D; Class II, Division 2, Groups F and G; and Class III, Divisions 1 and 2 hazardous (classified) locations, ~~and~~ with a temperature class within the range of T3 through T6 inclusive in accordance with UL 121201, *Nonincendive Electrical Equipment for Use in Class I and II, Division 2 and Class III, Divisions 1 and 2 Hazardous (Classified) Locations* .

Submitter Information Verification

Committee: FAE-ELS

Submittal Date: Mon Mar 04 13:46:18 EST 2024

Committee Statement

Committee Statement: RF devices and RSMs rely on UL 121201 Ninth Edition as the HazLoc standard for nonincendive. Therefore, it needs to be included as a Normative reference here, not just in an Informative Annex. Further, this addition aligns NFPA 1930 with the comparable text in NFPA 1970.

Response Message: SR-18-NFPA 1930-2024

Public Comment No. 11-NFPA 1930-2023 [Section No. 11.22.2 [Excluding any Sub-Sections]]

Ballot Results

✔ **This item has passed ballot**

35 Eligible Voters
6 Not Returned
25 Affirmative All
4 Affirmative with Comments
0 Negative with Comments
0 Abstention

Not Returned

Cruger, Lorenzo
Herbert, Don
Storti, William
Vaughan, Christopher R.
Warle, Magnus
Worrell, Cody

Affirmative All

Agi, Kamil

Allen, Jason L.

Bahri, Albert J

Berney-Smith, Marcus

Brooks, Joseph Francis

Chavez, Louis

Connolly, James M.

Cook, Jeffrey Curtis

Donnelly, Michelle

Ericson, Dan

Forsyth, William

Gestler, Craig

Grove, Collin

Haase, Wayne C.

Hanna, Benjamin

Hussey, Michael C.

Lentz, Kevin D.

Little, David A.

McCarraher, Gary

McKenna, Michael F.

Quinn, Michael P.

Richardson, Michael T.

Sampl, Christopher M.

Seay, Angelina

Varner, Bruce H.

Affirmative with Comment

Morris, John H.

A

Namm, Joseph

accepted as is

Smith, Clinton

wrong section referenced should be 11.23.2 however its correct in the spec

Turner, Jon

Agreed

Second Revision No. 19-NFPA 1930-2024 [Section No. 11.22.2.1]

11.23.2.1 Interconnection of Nonincendive Equipment, Electrically Interconnected Types .

11.23.2.1.1

Interconnection of separately certified nonincendive equipment, electrically interconnected types, shall be by means of a ~~connection~~ plug and jack that ~~complies~~ comply with the RFDC requirements as specified in Section 11.10.

11.23.2.1.2

The electrical parameters for this interconnection shall be in accordance with Table 11.23.2.1.2.

Table 11.23.2.1.2 Electrical Parameters for Interconnection of Nonincendive Equipment, Electrically Interconnected Types

RFDC as source	Required relationship	RFDC as sink
Uo ≤ 8 V	Uo ≤ Ui	Ui ≥ 10 V ~~max~~
Io ≤ 500 mA	Io ≤ Ii	Ii ≥ 1 A ~~max~~
Co ≥ 69 µF	Co ≥ Ci + Ccable*	Ci ≤ 68 µF ~~max~~
Lo ≥ 320 µH	Lo ≥ Li + Lcable*	Li ≤ 315 µH ~~max~~

* Assumption for cable capacitance (Ccable) and cable inductance (Lcable): 200 pF/m and 1 µH/m.

Submitter Information Verification

Committee: FAE-ELS
Submittal Date: Mon Mar 04 13:49:46 EST 2024

Committee Statement

Committee Statement: These revisions align NFPA 1930 with NFPA 1970, with the word "max" in particular being unnecessary.
Response Message: SR-19-NFPA 1930-2024

Public Comment No. 20-NFPA 1930-2023 [Section No. 11.22.2.1]

Ballot Results

✔ **This item has passed ballot**

35 Eligible Voters
6 Not Returned
25 Affirmative All
4 Affirmative with Comments
0 Negative with Comments
0 Abstention

Not Returned

Cruger, Lorenzo

Herbert, Don

Storti, William

Vaughan, Christopher R.

Warle, Magnus

Worrell, Cody

Affirmative All

Agi, Kamil

Allen, Jason L.

Bahri, Albert J

Berney-Smith, Marcus

Brooks, Joseph Francis

Chavez, Louis

Connolly, James M.

Cook, Jeffrey Curtis

Donnelly, Michelle

Ericson, Dan

Forsyth, William

Gestler, Craig

Grove, Collin

Haase, Wayne C.

Hanna, Benjamin

Hussey, Michael C.

Lentz, Kevin D.

Little, David A.

McCarraher, Gary

McKenna, Michael F.

Quinn, Michael P.

Richardson, Michael T.

Sampl, Christopher M.

Seay, Angelina

Varner, Bruce H.

Affirmative with Comment

Morris, John H.

A

Namm, Joseph

accepted as is

Smith, Clinton

wrong section referenced should be 11.23.2.1 however its correct in the spec

Turner, Jon

Agreed

Second Revision No. 20-NFPA 1930-2024 [Section No. 11.22.3]

11.23.3 Intrinsically Safe Systems.

11.23.3.1

RF devices and RSMs shall be permitted to be certified for use in Class I, Division 1, Groups C and D; Class II, Division 1, Groups E, F, and G; and Class III, Divisions 1 and 2 hazardous (classified) locations, and with a temperature class within the range of T3 through T6 inclusive in accordance with TIA-4950-A or TIA-4950-B, *Requirements for Battery-Powered, Portable Land Mobile Radio Applications in Class I, II, and III, Division 1, Hazardous (Classified) Locations* , 2014 or 2020, respectively, or UL 913, *Intrinsically Safe Apparatus and Associated Apparatus for Use in Class I, II, III, Division 1, Hazardous (Classified) Locations* .

~~**A.11.22.3.1**~~

~~This suitability is demonstrated by being certified as an intrinsically safe system in accordance with ANSI/TIA-4950-A or ANSI/TIA-4950-B, *Requirements for Battery-Powered, Portable Land Mobile Radio Applications in Class I, II, and III, Division 1, Hazardous (Classified) Locations,* 2014 or 2020, respectively, or ANSI/UL 913, *Intrinsically Safe Apparatus and Associated Apparatus for Use in Class I, II, III, Division 1, Hazardous (Classified) Locations.*~~

11.23.3.2 Interconnection of Intrinsically Safe Systems.

RF devices and RSMs that are certified as part of an intrinsically safe system shall only be interconnected with compatible devices also certified as part of the same intrinsically safe system.

Supplemental Information

File Name	Description	Approved
1930_SR-20_11.22.3.docx		

Submitter Information Verification

Committee: FAE-ELS

Submittal Date: Mon Mar 04 13:54:08 EST 2024

Committee Statement

Committee Statement: RF devices and RSMs rely on UL 913 Sixth Edition and TIA 4950-A and B as the HazLoc standard for intrinsic safety. Therefore, they need to be included as Normative reference here, not just in an Informative Annex. Further, this addition aligns NFPA 1930 with the comparable text in NFPA 1970.

This additional wording, adding the title to 11.22.3.2, provides immediately apparent clarifying details regarding the area of concern.

Removed annex material no longer necessary.

Response Message: SR-20-NFPA 1930-2024

Public Comment No. 27-NFPA 1930-2023 [Section No. A.11.22.3.1]

Public Comment No. 21-NFPA 1930-2023 [Section No. 11.22.3.1]

Public Comment No. 22-NFPA 1930-2023 [Section No. 11.22.3.2]

Ballot Results

✔ **This item has passed ballot**

35 Eligible Voters
6 Not Returned
25 Affirmative All
4 Affirmative with Comments
0 Negative with Comments
0 Abstention

Not Returned

Cruger, Lorenzo
Herbert, Don
Storti, William
Vaughan, Christopher R.
Warle, Magnus
Worrell, Cody

Affirmative All

Agi, Kamil
Allen, Jason L.
Bahri, Albert J
Berney-Smith, Marcus
Brooks, Joseph Francis
Chavez, Louis
Connolly, James M.
Cook, Jeffrey Curtis
Donnelly, Michelle
Ericson, Dan
Forsyth, William
Gestler, Craig
Grove, Collin
Haase, Wayne C.
Hanna, Benjamin
Hussey, Michael C.
Lentz, Kevin D.

Little, David A.

McCarraher, Gary

McKenna, Michael F.

Quinn, Michael P.

Richardson, Michael T.

Sampl, Christopher M.

Seay, Angelina

Varner, Bruce H.

Affirmative with Comment

Morris, John H.

A

Namm, Joseph

accepted as is

Smith, Clinton

Agree Section in spec and material correct, the SR-20 reference is incorrect as is committee statement reference

Turner, Jon

Agreed

Second Revision No. 47-NFPA 1930-2024 [Section No. 12.1.4.4]

~~12.1.4.4~~

~~Portable, handheld communication RF devices, RSMs, and RF subscriber ensemble shall be evaluated per 13.3.5 and 13.3.6 .~~

Submitter Information Verification

Committee: FAE-ELS
Submittal Date: Wed Mar 06 10:20:03 EST 2024

Committee Statement

Committee Statement: Removing a duplicate requirement to reduce confusion.
Response Message: SR-47-NFPA 1930-2024

Public Comment No. 46-NFPA 1930-2023 [Chapter 12]

Ballot Results

✔ **This item has passed ballot**

35 Eligible Voters
6 Not Returned
25 Affirmative All
4 Affirmative with Comments
0 Negative with Comments
0 Abstention

Not Returned

Cruger, Lorenzo
Herbert, Don
Storti, William
Vaughan, Christopher R.
Warle, Magnus
Worrell, Cody

Affirmative All

Agi, Kamil
Allen, Jason L.
Bahri, Albert J
Berney-Smith, Marcus

Brooks, Joseph Francis

Chavez, Louis

Connolly, James M.

Cook, Jeffrey Curtis

Donnelly, Michelle

Ericson, Dan

Forsyth, William

Gestler, Craig

Grove, Collin

Haase, Wayne C.

Hanna, Benjamin

Hussey, Michael C.

Lentz, Kevin D.

Little, David A.

McCarraher, Gary

McKenna, Michael F.

Quinn, Michael P.

Richardson, Michael T.

Sampl, Christopher M.

Seay, Angelina

Varner, Bruce H.

Affirmative with Comment

Morris, John H.

A

Namm, Joseph

accepted as is

Smith, Clinton

Agree

Turner, Jon

Agreed

Second Revision No. 40-NFPA 1930-2024 [New Section after 12.1.7.2]

12.1.7.3

The RF device, RSM, and RF subscriber ensemble shall not incur damage that affects the normal operation or enclosure integrity.

Submitter Information Verification

Committee: FAE-ELS
Submittal Date: Wed Mar 06 09:25:50 EST 2024

Committee Statement

Committee Statement: This requirement is included within the Impact Acceleration Resistance Test method (Section 13.5.4.6), but because it is a performance requirement, it should also be stated in Chapter 12, Performance Requirements.

Response Message: SR-40-NFPA 1930-2024

Public Comment No. 39-NFPA 1930-2023 [New Section after 12.1.7.2]

Ballot Results

✔ **This item has passed ballot**

35 Eligible Voters
6 Not Returned
25 Affirmative All
4 Affirmative with Comments
0 Negative with Comments
0 Abstention

Not Returned

Cruger, Lorenzo
Herbert, Don
Storti, William
Vaughan, Christopher R.
Warle, Magnus
Worrell, Cody

Affirmative All

Agi, Kamil
Allen, Jason L.

Bahri, Albert J
Berney-Smith, Marcus
Brooks, Joseph Francis
Chavez, Louis
Connolly, James M.
Cook, Jeffrey Curtis
Donnelly, Michelle
Ericson, Dan
Forsyth, William
Gestler, Craig
Grove, Collin
Haase, Wayne C.
Hanna, Benjamin
Hussey, Michael C.
Lentz, Kevin D.
Little, David A.
McCarraher, Gary
McKenna, Michael F.
Quinn, Michael P.
Richardson, Michael T.
Sampl, Christopher M.
Seay, Angelina
Varner, Bruce H.

Affirmative with Comment

Morris, John H.
Affect or Effect?
Namm, Joseph
accepted as is
Smith, Clinton
Agree
Turner, Jon
Agreed

Second Revision No. 48-NFPA 1930-2024 [Section No. 12.1.12.3]

12.1.12.3

Product labels shall be able to be read by the untrained eye for the following exposures:

(1) Corrosion

(2) ~~Heat resistance~~ High-temperature functionality

(3) Durability

Submitter Information Verification

Committee: FAE-ELS
Submittal Date: Wed Mar 06 10:22:57 EST 2024

Committee Statement

Committee Statement: Fixing the title of the test to be consistent throughout the document.
Response Message: SR-48-NFPA 1930-2024

Ballot Results

✔ **This item has passed ballot**

35 Eligible Voters
6 Not Returned
25 Affirmative All
4 Affirmative with Comments
0 Negative with Comments
0 Abstention

Not Returned

Cruger, Lorenzo
Herbert, Don
Storti, William
Vaughan, Christopher R.
Warle, Magnus
Worrell, Cody

Affirmative All

Agi, Kamil
Allen, Jason L.

Bahri, Albert J
Berney-Smith, Marcus
Brooks, Joseph Francis
Chavez, Louis
Connolly, James M.
Cook, Jeffrey Curtis
Donnelly, Michelle
Ericson, Dan
Forsyth, William
Gestler, Craig
Grove, Collin
Haase, Wayne C.
Hanna, Benjamin
Hussey, Michael C.
Lentz, Kevin D.
Little, David A.
McCarraher, Gary
McKenna, Michael F.
Quinn, Michael P.
Richardson, Michael T.
Sampl, Christopher M.
Seay, Angelina
Varner, Bruce H.

Affirmative with Comment

Morris, John H.
A
Namm, Joseph
accepted as is
Smith, Clinton
Agree
Turner, Jon
Agreed

Second Revision No. 41-NFPA 1930-2024 [New Section after 12.1.13.1]

12.1.13.2

The RF device, RSM, and RF subscriber ensemble shall have a minimum speech quality result of 2.5.

Submitter Information Verification

Committee: FAE-ELS
Submittal Date: Wed Mar 06 09:27:44 EST 2024

Committee Statement

Committee Statement: This added section clarifies that the speech quality requirement of 2.5 is applicable when tested as part of the water drainage test. Currently, the test requires speech quality testing and reporting of those results, however the P/F value is not directly stated under section 12.1.13. The section is currently interpreted to require the speech quality value of 2.5 as stated in section 12.1.1.2. Adding the requirement here makes it clearer.

Response Message: SR-41-NFPA 1930-2024

Public Comment No. 34-NFPA 1930-2023 [New Section after 12.1.13.1]

Ballot Results

✔ **This item has passed ballot**

35 Eligible Voters
6 Not Returned
25 Affirmative All
4 Affirmative with Comments
0 Negative with Comments
0 Abstention

Not Returned

Cruger, Lorenzo
Herbert, Don
Storti, William
Vaughan, Christopher R.
Warle, Magnus
Worrell, Cody

Affirmative All

Agi, Kamil

Allen, Jason L.
Bahri, Albert J
Berney-Smith, Marcus
Brooks, Joseph Francis
Chavez, Louis
Connolly, James M.
Cook, Jeffrey Curtis
Donnelly, Michelle
Ericson, Dan
Forsyth, William
Gestler, Craig
Grove, Collin
Haase, Wayne C.
Hanna, Benjamin
Hussey, Michael C.
Lentz, Kevin D.
Little, David A.
McCarraher, Gary
McKenna, Michael F.
Quinn, Michael P.
Richardson, Michael T.
Sampl, Christopher M.
Seay, Angelina
Varner, Bruce H.

Affirmative with Comment

Morris, John H.
A
Namm, Joseph
accepted as is
Smith, Clinton
Agree
Turner, Jon
Agreed

Second Revision No. 50-NFPA 1930-2024 [Sections 12.2.1.2, 12.2.1.3, 12.2.1.4]

12.3 ~~Testing~~ RF Device Requirements .

12.3.1

The RF device shall be tested according to Section 13.15 and meet the requirements for carrier output power 2.2.1 (analog) as specified in TIA-603-E, *Land Mobile FM or PM — Communications Equipment — Measurement and Performance* ~~*Standards,* and RF power output 3.2.1 (digital) as specified in TIA-102.CAAB-E, *Land Mobile Radio Transceiver Performance Recommendations, Digital Radio Technology, C4FM/CQPSK Modulation*~~ .

~~**12.3.2**~~

~~Transmit power shall not decrease by more than 1 dB for the first 8 hours.~~

12.3.2*

The RF device shall be tested according to Section 13.17 and meet the Class A requirements for reference sensitivity 2.1.4 (analog) as specified in TIA-603-E, *Land Mobile FM or PM — Communications Equipment — Measurement and Performance Standards,* ~~and reference sensitivity 3.1.4 (digital) as specified in TIA-102.CAAB-E, *Land Mobile Radio Transceiver Performance Recommendations, Digital Radio Technology, C4FM/CQPSK Modulation*~~ .

12.3.3

The RF device shall be tested according to Section 13.16 and meet the requirements for carrier frequency stability 2.2.2 (analog) as specified in TIA-603-E, *Land Mobile FM or PM — Communications Equipment — Measurement and Performance Standards,* ~~and operating frequency accuracy 3.2.2 (digital) as specified in TIA-102.CAAB-E, *Land Mobile Radio Transceiver Performance Recommendations, Digital Radio Technology, C4FM/CQPSK Modulation*~~ .

Supplemental Information

File Name	Description	Approved
1930_SR-50_12.2.1.2.docx		

Submitter Information Verification

Committee: FAE-ELS

Submittal Date: Wed Mar 06 10:36:12 EST 2024

Committee Statement

Committee Statement: Updating test methods to show focus on conventional analog and correcting the title of the section. Deleted section that did not belong.

Response Message: SR-50-NFPA 1930-2024

Ballot Results

✔ **This item has passed ballot**

35 Eligible Voters
6 Not Returned
25 Affirmative All
4 Affirmative with Comments
0 Negative with Comments
0 Abstention

Not Returned

Cruger, Lorenzo
Herbert, Don
Storti, William
Vaughan, Christopher R.
Warle, Magnus
Worrell, Cody

Affirmative All

Agi, Kamil
Allen, Jason L.
Bahri, Albert J
Berney-Smith, Marcus
Brooks, Joseph Francis
Chavez, Louis
Connolly, James M.
Cook, Jeffrey Curtis
Donnelly, Michelle
Ericson, Dan
Forsyth, William
Gestler, Craig
Grove, Collin
Haase, Wayne C.
Hanna, Benjamin
Hussey, Michael C.
Lentz, Kevin D.
Little, David A.
McCarraher, Gary
McKenna, Michael F.
Quinn, Michael P.
Richardson, Michael T.
Sampl, Christopher M.
Seay, Angelina
Varner, Bruce H.

Affirmative with Comment

Morris, John H.

A

Namm, Joseph

accepted as is

Smith, Clinton

Agree Section in spec and material correct, the SR-50 references are incorrect

Turner, Jon

Agreed

Second Revision No. 52-NFPA 1930-2024 [Section No. 12.3.2]

12.4.2

The RF antenna shall exhibit a voltage standing wave ratio (VSWR) ~~increase of no more than 41 percent across the bandwidth~~ that is less than or equal to the manufacturer's design specification for maximum VSWR as tested with its test fixture .

Submitter Information Verification

Committee: FAE-ELS
Submittal Date: Wed Mar 06 10:55:25 EST 2024

Committee Statement

Committee Statement: Updated VSWR performance criteria to ensure antennas operating as designed do not fail. The current P/F criteria is not a minimum performance requirement, but a relative performance requirement that allows an antenna to fail when it is operating as designed.

Response Message: SR-52-NFPA 1930-2024

Public Comment No. 38-NFPA 1930-2023 [Section No. 12.3.2]

Ballot Results

✔ **This item has passed ballot**

35 Eligible Voters
6 Not Returned
25 Affirmative All
4 Affirmative with Comments
0 Negative with Comments
0 Abstention

Not Returned

Cruger, Lorenzo
Herbert, Don
Storti, William
Vaughan, Christopher R.
Warle, Magnus
Worrell, Cody

Affirmative All

Agi, Kamil

Allen, Jason L.
Bahri, Albert J
Berney-Smith, Marcus
Brooks, Joseph Francis
Chavez, Louis
Connolly, James M.
Cook, Jeffrey Curtis
Donnelly, Michelle
Ericson, Dan
Forsyth, William
Gestler, Craig
Grove, Collin
Haase, Wayne C.
Hanna, Benjamin
Hussey, Michael C.
Lentz, Kevin D.
Little, David A.
McCarraher, Gary
McKenna, Michael F.
Quinn, Michael P.
Richardson, Michael T.
Sampl, Christopher M.
Seay, Angelina
Varner, Bruce H.

Affirmative with Comment

Morris, John H.
A
Namm, Joseph
accepted as is
Smith, Clinton
Agree Section in spec and material correct, the SR-52 references are incorrect
Turner, Jon
Agreed

Second Revision No. 36-NFPA 1930-2024 [Section No. 13.2.1.10]

13.2.1.10 Artificial Mouth.

The artificial mouth shall be calibrated as follows *(see Figure 13.2.1.10)*:

(1) The pink noise test signal from the HATS shall be equalized flat with pink noise from 100 Hz to 10 kHz to ±1dB on a ⅓ octave scale and adjusted to achieve an A-weighted sound level of 97 dBA ±0.5 dB at the mouth reference point (MRP), 50 mm ±3 mm (2 in. ±⅛ in.) from the HATS' mouth, or an inverse sine sweep from 100 Hz to 10 kHz to equalize the mouth shall be allowed.

(2) The levels for the 125 Hz octave band (the 100 Hz, 125 Hz, 160 Hz ⅓ octave bands) shall be reduced by 10 dB.

(3) The levels for the 250 Hz octave band (the 200 Hz, 250 Hz, 315 Hz ⅓ octave bands) shall be reduced by 2 dB.

(4) The speech quality test signal "Male1_1st_~~Set_8k~~ LMR .wav" shall be applied and the SPL adjusted until an average (SPL) (Leq) of 95 dBA ±0.5 dBA is achieved, over a period of time of 45 seconds ±15 seconds.

Figure 13.2.1.10 Calibration of the Artificial Mouth.

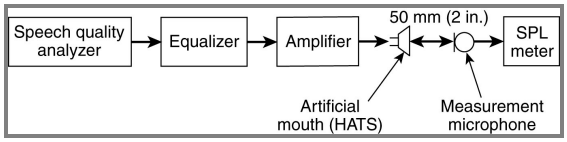

Submitter Information Verification

Committee: FAE-ELS

Submittal Date: Wed Mar 06 09:05:43 EST 2024

Committee Statement

Committee Statement: This change updates the test signal file name for consistency with other second revisions.

Response Message: SR-36-NFPA 1930-2024

Public Comment No. 29-NFPA 1930-2023 [Section No. 13.2.1.10]

Ballot Results

✔ **This item has passed ballot**

35 Eligible Voters
6 Not Returned
25 Affirmative All
4 Affirmative with Comments
0 Negative with Comments
0 Abstention

Not Returned

Cruger, Lorenzo

Herbert, Don

Storti, William

Vaughan, Christopher R.

Warle, Magnus

Worrell, Cody

Affirmative All

Agi, Kamil

Allen, Jason L.

Bahri, Albert J

Berney-Smith, Marcus

Brooks, Joseph Francis

Chavez, Louis

Connolly, James M.

Cook, Jeffrey Curtis

Donnelly, Michelle

Ericson, Dan

Forsyth, William

Gestler, Craig

Grove, Collin

Haase, Wayne C.

Hanna, Benjamin

Hussey, Michael C.

Lentz, Kevin D.

Little, David A.

McCarraher, Gary

McKenna, Michael F.

Quinn, Michael P.

Richardson, Michael T.

Sampl, Christopher M.

Seay, Angelina

Varner, Bruce H.

Affirmative with Comment

Morris, John H.

A

Namm, Joseph

accepted as is

Smith, Clinton

Agree

Turner, Jon

Agreed

Second Revision No. 35-NFPA 1930-2024 [New Section after 13.2.1.12]

13.2.1.12 Excitation Speech Signals.

13.2.1.12.1*

Four excitation speech signals, two male and two female, shall be selected by the audio analyzer as follows:

(1) Male1_1st _Set_8k.wav

(2) Male2_1st _Set_8k.wav

(3) Female1_1st _Set_8k.wav

(4) Female2_1st _Set_8k.wav

A.13.2.1.12.1

Speech reference files in 13.2.1.12.1 use the default file names for PESQ speech signals when they are obtained from an audio precision speech quality analyzer, and are publicly available for download at www.ap.com/download/pesq-speech-waveforms/.

13.2.1.12.2*

The following modifications shall be applied to each of the four excitation speech signals:

(1) Each file shall be high-pass filtered with a 9th order Butterworth filter with a –3 dB point of 300 Hz.

(2) Following filtering, each file shall be scaled to provide an active speech level (ASL) of –26 dBov according to ITU-T Recommendation P.56.

(3) The file names shall be revised from "…Set_8k.wav" to "…LMR.wav" to reflect that these modifications have been applied.

A.13.2.1.12.2

During development of this test method, it was found that direct application of PESQ reference files in a land mobile radio (LMR) conventional FM communications system resulted POLQA scores that were not representative of the voice quality perceived by human observers. Conventional FM LMR systems remove audio information below 300Hz. When the reference files are high-pass filtered and level normalized, the POLQA scores more closely reflect the speech quality perceived by human observers.

Submitter Information Verification

Committee: FAE-ELS

Submittal Date: Wed Mar 06 08:59:49 EST 2024

Committee Statement

Committee Statement: Several public inputs were submitted during the first draft process which were intended to clarify how to use PESQ files with POLQA analysis, and to possibly change those files from PESQ to POLQA. The changes submitted reflect how those files are configured in order to work correctly with the POLQA analysis that is used, and provide more detail than the first draft section 13.2.1.12.2(2) which states the PESQ files may be altered to work with POLQA. Additionally, NFPA 1930 (1802) needs to state the source of the files that are used, giving the file naming convention. Because of this, an annex item has been added to document where the files may be obtained.

Response Message: SR-35-NFPA 1930-2024

Public Comment No. 30-NFPA 1930-2023 [New Section after 13.2.1.12]

Ballot Results

✔ **This item has passed ballot**

35 Eligible Voters
6 Not Returned
25 Affirmative All
4 Affirmative with Comments
0 Negative with Comments
0 Abstention

Not Returned

Cruger, Lorenzo
Herbert, Don
Storti, William
Vaughan, Christopher R.
Warle, Magnus
Worrell, Cody

Affirmative All

Agi, Kamil
Allen, Jason L.
Bahri, Albert J
Berney-Smith, Marcus
Brooks, Joseph Francis
Chavez, Louis
Connolly, James M.
Cook, Jeffrey Curtis
Donnelly, Michelle
Ericson, Dan
Forsyth, William
Gestler, Craig
Grove, Collin

Haase, Wayne C.
Hanna, Benjamin
Hussey, Michael C.
Lentz, Kevin D.
Little, David A.
McCarraher, Gary
McKenna, Michael F.
Quinn, Michael P.
Richardson, Michael T.
Sampl, Christopher M.
Seay, Angelina
Varner, Bruce H.

Affirmative with Comment

Morris, John H.
A
Namm, Joseph
accepted as is
Smith, Clinton
Agree
Turner, Jon
Agreed

Second Revision No. 37-NFPA 1930-2024 [Section No. 13.2.1.12.2]

13.2.1.13.2

Each speech quality measurement shall be recorded for each test signal as follows:

(1) Four excitation speech signals, two male and two female, as defined in 13.2.1.13 , shall be selected ~~by the speech quality analyzer~~ as follows:

(a) Male1_1st_~~Set_8k~~ LMR .wav

(b) Male2_1st_~~Set_8k~~ LMR .wav

(c) Female1_1st_~~Set_8k~~ LMR .wav

(d) Female2_1st_~~Set_8k~~ LMR .wav

~~The four excitation speech signals, two male and two female, shall be permitted to be altered to meet ITU P.86 requirements for testing.~~

(2) The mode in the RF device and speech quality analyzer shall be narrowband.

(3) When using narrowband, automatic gain control in the DUT shall be disabled and level alignment enabled in the speech quality analyzer, in accordance with Sub-~~Section~~ section 8 3 of ITU P.863 .

(4) The four speech quality readings shall be calculated and reported.

Supplemental Information

File Name	Description	Approved
1930_SR_37_13.2.1.12.docx		
1930_SR-37_13.2.1.12.2.docx	For prod use	

Submitter Information Verification

Committee: FAE-ELS

Submittal Date: Wed Mar 06 09:10:03 EST 2024

Committee Statement

Committee Statement: This change updates the test signal file names for consistency with other second revisions. Additionally, it removes subsection (2) which allowed for the signals to be altered. This is because other SRs specify exactly how the files need to be altered. Lastly, this SR corrects the reference made to ITU P.863.

Response Message: SR-37-NFPA 1930-2024

Public Comment No. 31-NFPA 1930-2023 [Section No. 13.2.1.12.2]

Ballot Results

✔ **This item has passed ballot**

35 Eligible Voters

6 Not Returned
25 Affirmative All
4 Affirmative with Comments
0 Negative with Comments
0 Abstention

Not Returned

Cruger, Lorenzo
Herbert, Don
Storti, William
Vaughan, Christopher R.
Warle, Magnus
Worrell, Cody

Affirmative All

Agi, Kamil
Allen, Jason L.
Bahri, Albert J
Berney-Smith, Marcus
Brooks, Joseph Francis
Chavez, Louis
Connolly, James M.
Cook, Jeffrey Curtis
Donnelly, Michelle
Ericson, Dan
Forsyth, William
Gestler, Craig
Grove, Collin
Haase, Wayne C.
Hanna, Benjamin
Hussey, Michael C.
Lentz, Kevin D.
Little, David A.
McCarraher, Gary
McKenna, Michael F.
Quinn, Michael P.
Richardson, Michael T.
Sampl, Christopher M.
Seay, Angelina
Varner, Bruce H.

Affirmative with Comment

Morris, John H.

A

Namm, Joseph

accepted as is

Smith, Clinton

Agree

Turner, Jon

Agreed

Second Revision No. 38-NFPA 1930-2024 [Sections 13.2.1.16, 13.2.1.17, 13.2.1.18]

13.2.1.17 RF Device RFDC Receive Audio Speech Quality Test.

The RF device RFDC receive audio speech quality test shall be conducted in accordance with the following procedure *(see Figure 13.2.1.17)*:

(1) The volume of the RF device shall be set to the maximum rated audio as specified by the manufacturer.

(2) The audio output shall be scaled and ground referenced for the speech quality test system to achieve the best mean opinion score (MOS).

(3) The RF device test set/service monitor shall have preemphasis enabled and transmit power set to a level that provides a power level measured at the device under test (DUT) of −60 dBm ±3 dBm.

(4) The audio levels shall be adjusted and recorded from the speech quality test system until the FM peak modulation is between 2.0 kHz and 2.2 kHz from the service monitor using the “Male1_1st_~~Set_8k~~ LMR .wav” file and used throughout each individual test method.

(5) The RF signal between the RF device test set and the DUT shall be directly connected (i.e., wired).

(6) The drum reference point (DRP) to field-free transfer function shall be applied to receive testing using HATS' artificial ear.

(7) All alert tones shall be turned off for speech quality testing.

(8) The measurement shall be started and the speech quality result measured and reported.

Figure 13.2.1.17 Measurement Setup for RF Device RFDC Receive Audio Speech Quality Test.

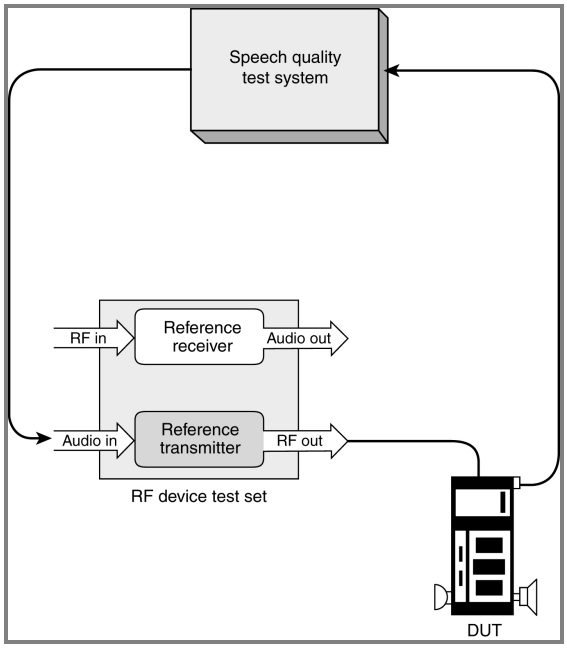

13.2.1.18 RF Device Bluetooth® Receive Audio Speech Quality Test.

The RF device Bluetooth® receive audio speech quality test shall be conducted in accordance with the following procedure *(see Figure 13.2.1.18)*:

(1) The volume of the RF device shall be set to the maximum rated audio as specified by the manufacturer.

(2) The audio output shall be scaled and ground referenced for the speech quality test system to achieve the best MOS.

(3) The RF device test set/service monitor shall have preemphasis enabled and transmit power set to a level that provides a power level measured at the device under test (DUT) of −60 dBm ±3 dBm.

(4) The audio levels shall be adjusted and recorded from the speech quality test system until the FM peak modulation is between 2.0 kHz and 2.2 kHz from the service monitor using the “Male1_1st_~~Set_8k~~ LMR .wav” file and used throughout each individual test method.

(5) The RF signal between the RF device test set and the DUT shall be directly connected (i.e., wired).

(6) The measurement shall be started and the speech quality result measured and reported.

Figure 13.2.1.18 Measurement Setup for RF Device Bluetooth® Receive Audio Speech Quality Test.

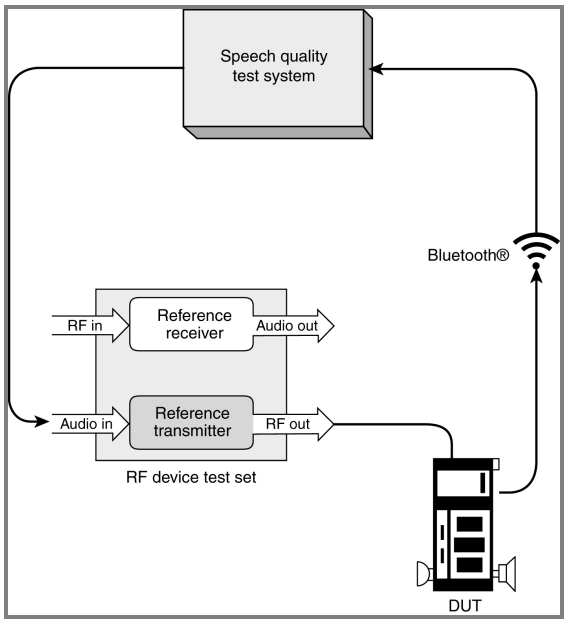

13.2.1.19 RF Device Speaker Receive Audio Speech Quality Test.

The RF device speaker receive audio speech quality test shall be conducted in accordance with the following procedure *(see Figure 13.2.1.19)*:

(1) The receiving RF device speaker shall be set in accordance with the following procedure:

(a) The receiving RF device speaker shall be mounted in front of the artificial ear via the manufacturer-provided fixture.

(b) The RF device speaker shall be centered to the artificial ear at a horizontal distance of 50 mm ±5 mm (2 in. ±0.2 in.).

(2) The volume of the RF device shall be set to the maximum rated audio as specified by the manufacturer.

(3) The RF device test set/service monitor shall have preemphasis enabled and transmit power set to a level that provides a power level measured at the device under test (DUT) of –60 dBm ±3 dBm.

(4) The audio levels shall be adjusted and recorded from the speech quality test system until the FM peak modulation is between 2.0 kHz and 2.2 kHz from the radio test set/service monitor using the “Male1_1st_~~Set_8k~~ LMR .wav” file and used throughout each individual test method.

(5) The input sensitivity of the speech quality analyzer shall be set to the level of the artificial ear calibration *(see 13.2.1.11)*.

(6) The RF signal between the RF device test set and the DUT shall be directly connected (i.e., wired).

(7) The measurement shall be started and the speech quality result reading reported.

Figure 13.2.1.19 Measurement Setup for RF Device Speaker Receive Audio Speech Quality Test.

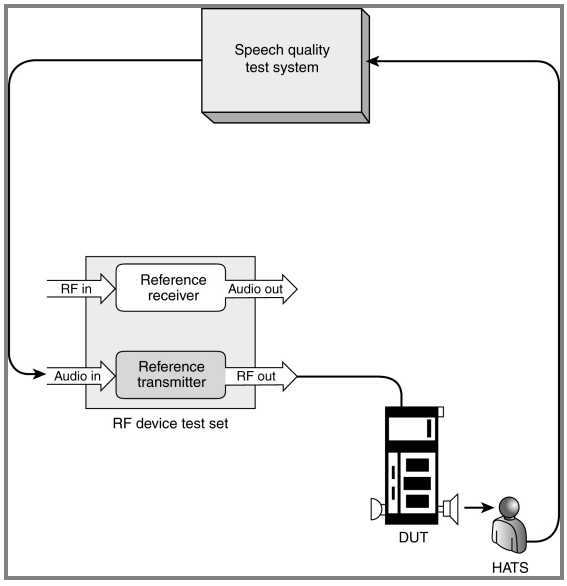

Submitter Information Verification

Committee: FAE-ELS

Submittal Date: Wed Mar 06 09:14:07 EST 2024

Committee Statement

Committee Statement: This change updates the test signal file name for consistency with other SRs.

Response Message: SR-38-NFPA 1930-2024

Public Comment No. 32-NFPA 1930-2023 [Sections 13.2.1.16, 13.2.1.17, 13.2.1.18]

Ballot Results

✔ **This item has passed ballot**

35 Eligible Voters
6 Not Returned
25 Affirmative All
4 Affirmative with Comments
0 Negative with Comments
0 Abstention

Not Returned

Cruger, Lorenzo
Herbert, Don
Storti, William
Vaughan, Christopher R.
Warle, Magnus
Worrell, Cody

Affirmative All

Agi, Kamil
Allen, Jason L.
Bahri, Albert J
Berney-Smith, Marcus
Brooks, Joseph Francis
Chavez, Louis
Connolly, James M.
Cook, Jeffrey Curtis
Donnelly, Michelle
Ericson, Dan
Forsyth, William
Gestler, Craig
Grove, Collin
Haase, Wayne C.
Hanna, Benjamin
Hussey, Michael C.
Lentz, Kevin D.
Little, David A.
McCarraher, Gary

McKenna, Michael F.

Quinn, Michael P.

Richardson, Michael T.

Sampl, Christopher M.

Seay, Angelina

Varner, Bruce H.

Affirmative with Comment

Morris, John H.

A

Namm, Joseph

accepted as is

Smith, Clinton

Agree

Turner, Jon

Agreed

Second Revision No. 43-NFPA 1930-2024 [Section No. 13.8.5.9]

13.8.5.9

~~Initiation of~~ Following the ~~specimen's functional evaluation~~ speech quality measurement, the specimen shall ~~occur in accordance with Sections~~ ~~11.2~~ ~~through~~ ~~11.7~~ ~~and~~ be operated to the manufacturer's instructions as specified in Sections 11.2 through 11.7 and 11.9 to determine ~~the~~ functionality and pass or fail performance ~~requirements immediately following speech quality testing~~ .

Supplemental Information

File Name	Description	Approved
1930_SR-43_13.8.5.9.docx		

Submitter Information Verification

Committee: FAE-ELS

Submittal Date: Wed Mar 06 10:06:19 EST 2024

Committee Statement

Committee Statement: Insuring the RSM is checked for functionality after the test and updating the language to be consistent with the other test methods.

Response Message: SR-43-NFPA 1930-2024

Public Comment No. 47-NFPA 1930-2023 [Chapter 13]

Ballot Results

✔ **This item has passed ballot**

35 Eligible Voters
6 Not Returned
25 Affirmative All
4 Affirmative with Comments
0 Negative with Comments
0 Abstention

Not Returned

Cruger, Lorenzo

Herbert, Don

Storti, William

Vaughan, Christopher R.

Warle, Magnus

Worrell, Cody

Affirmative All

Agi, Kamil
Allen, Jason L.
Bahri, Albert J
Berney-Smith, Marcus
Brooks, Joseph Francis
Chavez, Louis
Connolly, James M.
Cook, Jeffrey Curtis
Donnelly, Michelle
Ericson, Dan
Forsyth, William
Gestler, Craig
Grove, Collin
Haase, Wayne C.
Hanna, Benjamin
Hussey, Michael C.
Lentz, Kevin D.
Little, David A.
McCarraher, Gary
McKenna, Michael F.
Quinn, Michael P.
Richardson, Michael T.
Sampl, Christopher M.
Seay, Angelina
Varner, Bruce H.

Affirmative with Comment

Morris, John H.
A
Namm, Joseph
accepted as is
Smith, Clinton
Agree
Turner, Jon
Agreed

Second Revision No. 44-NFPA 1930-2024 [Section No. 13.9.5.9]

13.9.5.9

Following the speech quality measurement, the specimen shall be operated to the manufacturer's instructions as specified in Sections 11.2 through 11.7 and 11.9 to determine functionality and pass or fail performance.

Submitter Information Verification

Committee: FAE-ELS
Submittal Date: Wed Mar 06 10:09:44 EST 2024

Committee Statement

Committee Statement: Ensuring the RSM is checked for functionality after the test and updating the language to be consistent with the other test methods.
Response Message: SR-44-NFPA 1930-2024

Ballot Results

✔ **This item has passed ballot**

35 Eligible Voters
6 Not Returned
25 Affirmative All
4 Affirmative with Comments
0 Negative with Comments
0 Abstention

Not Returned

Cruger, Lorenzo
Herbert, Don
Storti, William
Vaughan, Christopher R.
Warle, Magnus
Worrell, Cody

Affirmative All

Agi, Kamil
Allen, Jason L.
Bahri, Albert J

Berney-Smith, Marcus

Brooks, Joseph Francis

Chavez, Louis

Connolly, James M.

Cook, Jeffrey Curtis

Donnelly, Michelle

Ericson, Dan

Forsyth, William

Gestler, Craig

Grove, Collin

Haase, Wayne C.

Hanna, Benjamin

Hussey, Michael C.

Lentz, Kevin D.

Little, David A.

McCarraher, Gary

McKenna, Michael F.

Quinn, Michael P.

Richardson, Michael T.

Sampl, Christopher M.

Seay, Angelina

Varner, Bruce H.

Affirmative with Comment

Morris, John H.

A

Namm, Joseph

accepted as is

Smith, Clinton

Agree

Turner, Jon

Agreed

Second Revision No. 45-NFPA 1930-2024 [Section No. 13.11.6.3]

13.11.6.3

~~Following~~ The functionality of the ~~speech quality measurement, the specimen shall be operated to the manufacturer's instructions~~ specimens as specified in Sections 11.2 through 11.7~~to determine functionality and pass or fail performance~~ and 11.9 shall be recorded and reported .

Supplemental Information

File Name	Description	Approved
1930_SR-45_13.11.6.3.docx		

Submitter Information Verification

Committee: FAE-ELS

Submittal Date: Wed Mar 06 10:12:41 EST 2024

Committee Statement

Committee Statement: Ensuring the RSM is checked for functionality after the test and updating the language to be consistent with the other test methods.

Response Message: SR-45-NFPA 1930-2024

Ballot Results

✔ **This item has passed ballot**

35 Eligible Voters
6 Not Returned
25 Affirmative All
4 Affirmative with Comments
0 Negative with Comments
0 Abstention

Not Returned

Cruger, Lorenzo
Herbert, Don
Storti, William
Vaughan, Christopher R.
Warle, Magnus
Worrell, Cody

Affirmative All

Agi, Kamil

Allen, Jason L.

Bahri, Albert J

Berney-Smith, Marcus

Brooks, Joseph Francis

Chavez, Louis

Connolly, James M.

Cook, Jeffrey Curtis

Donnelly, Michelle

Ericson, Dan

Forsyth, William

Gestler, Craig

Grove, Collin

Haase, Wayne C.

Hanna, Benjamin

Hussey, Michael C.

Lentz, Kevin D.

Little, David A.

McCarraher, Gary

McKenna, Michael F.

Quinn, Michael P.

Richardson, Michael T.

Sampl, Christopher M.

Seay, Angelina

Varner, Bruce H.

Affirmative with Comment

Morris, John H.

A

Namm, Joseph

accepted as is

Smith, Clinton

Agree

Turner, Jon

Agreed

Second Revision No. 46-NFPA 1930-2024 [Section No. 13.19.1]

13.19.1 Application.

This test method shall apply to all RF devices and RSMs .

Submitter Information Verification

Committee: FAE-ELS
Submittal Date: Wed Mar 06 10:15:00 EST 2024

Committee Statement

Committee Statement: Adding RSMs to be consistent with table 9.4.9.1.
Response Message: SR-46-NFPA 1930-2024

Ballot Results

✔ **This item has passed ballot**

35 Eligible Voters
6 Not Returned
25 Affirmative All
4 Affirmative with Comments
0 Negative with Comments
0 Abstention

Not Returned

Cruger, Lorenzo
Herbert, Don
Storti, William
Vaughan, Christopher R.
Warle, Magnus
Worrell, Cody

Affirmative All

Agi, Kamil
Allen, Jason L.
Bahri, Albert J
Berney-Smith, Marcus
Brooks, Joseph Francis
Chavez, Louis

Connolly, James M.
Cook, Jeffrey Curtis
Donnelly, Michelle
Ericson, Dan
Forsyth, William
Gestler, Craig
Grove, Collin
Haase, Wayne C.
Hanna, Benjamin
Hussey, Michael C.
Lentz, Kevin D.
Little, David A.
McCarraher, Gary
McKenna, Michael F.
Quinn, Michael P.
Richardson, Michael T.
Sampl, Christopher M.
Seay, Angelina
Varner, Bruce H.

Affirmative with Comment

Morris, John H.
A
Namm, Joseph
accepted as is
Smith, Clinton
Agree
Turner, Jon
Agreed

Second Revision No. 12-NFPA 1930-2024 [Section No. A.3.3.57]

Detail SR-79

A.3.3.57 Hazardous (Classified) Location (HazLoc).

A hazardous (classified) location is a location in which an explosive gas atmosphere or explosive dust atmosphere might exist. Electrical equipment used where such atmospheres might exist should be protected against the risk of explosion from energy or thermal ignition sources. In this standard, intrinsic safety (IS) and nonincendive (NI) are protection concepts associated with the rating of equipment for operation in potentially explosive atmospheres. IS and NI ratings consider the nature of the explosive atmosphere encountered — Class I being explosive gas atmospheres and Class II being explosive dust atmospheres — and the frequency or interval of the presence of such explosive atmospheres (i.e., continuously, intermittently, or abnormally). The frequency or interval of the presence of the explosive atmosphere determines the proper ~~division~~Division (i.e~~.~~g~~.~~, Division 1 or Division 2) or ~~zone~~Zone (i.e~~.~~g~~.~~, Zone 0, Zone 1, or Zone 2) classifications that are applied to a particular IS or NI rating. To determine the appropriate IS or NI rating for thermal imagers and RF devices, the AHJ identifies the expected explosive atmospheres likely to be encountered and the expected frequency or interval of the presence of such expected explosive atmospheres.

~~Some examples of flammable and combustible material include~~Examples of flammable or combustible material include flammable gases, flammable liquid-produced vapors, combustible liquid-produced vapors, combustible dusts, or ignitible fibers/flyings.

Submitter Information Verification

Committee: FAE-ELS

Submittal Date: Wed Feb 21 13:33:07 EST 2024

Committee Statement

Committee Statement: These revisions align this Annex item in NFPA 1930 with the comparaeel Annex item in NFPA 1970. In addition, it reflects industry convention regarding capitalization, and grammatical norms regarding use of "e.g." versus "i.e."

Response Message: SR-12-NFPA 1930-2024

Public Comment No. 16-NFPA 1930-2023 [Section No. A.3.3.57]

Ballot Results

✔ **This item has passed ballot**

35 Eligible Voters
6 Not Returned
25 Affirmative All
4 Affirmative with Comments
0 Negative with Comments
0 Abstention

Not Returned

Cruger, Lorenzo

Herbert, Don

Storti, William

Vaughan, Christopher R.

Warle, Magnus

Worrell, Cody

Affirmative All

Agi, Kamil

Allen, Jason L.

Bahri, Albert J

Berney-Smith, Marcus

Brooks, Joseph Francis

Chavez, Louis

Connolly, James M.

Cook, Jeffrey Curtis

Donnelly, Michelle

Ericson, Dan

Forsyth, William

Gestler, Craig

Grove, Collin

Haase, Wayne C.

Hanna, Benjamin

Hussey, Michael C.

Lentz, Kevin D.

Little, David A.

McCarraher, Gary

McKenna, Michael F.

Quinn, Michael P.

Richardson, Michael T.

Sampl, Christopher M.

Seay, Angelina

Varner, Bruce H.

Affirmative with Comment

Morris, John H.

A

Namm, Joseph

accepted as is

Smith, Clinton

Agree

Turner, Jon

Agreed

Second Revision No. 4-NFPA 1930-2024 [Section No. A.6.7]

A.6.7

For decades, the explosion protection requirements for RF devices have traditionally been derived from intrinsic safety (IS) requirements, while the explosion protection requirements for thermal imagers have traditionally been derived from nonincendive (NI) requirements. Both of these explosion protections are from *NFPA 70, National Electrical Code (NEC)*. The *NEC* provides requirements for fixed electrical power installations in hazardous (classified) locations such as refineries and grain elevators. The use case for fire service portable devices is different in many ways from fixed electrical installations. In addition, changes were made recently in how testing organizations test certain fire service devices for explosion protection (e.g., RF devices ~~for IS~~). These changes ~~provide~~ provided an opportunity ~~to determine~~ to revisit what the exact level of explosion protection is really required for portable devices used in the fire service. The committee has spent a significant amount of time looking at the various issues, reviewing the past history of incidents, and talking to industry experts. ~~In~~ This standard, with regard to explosion protection, ~~this standard~~ reflects that extensive analysis and the resulting decision. The following information is an explanation of some of the many issues and tradeoffs that were considered during this process.

First, the term *certified on delivery* warrants explanation. The firefighter faces many varied operating conditions and therefore needs equipment that can span those multiple conditions. Designing for hazardous locations, as classified by the *NEC*, is done with standards that often assume permanent mounting of electrical fixtures within a defined area. None of those areas approaches the environment found within any structure fire. As such, there is no established set of failure mechanisms, practices for design, or means of testing and validation that would make a product certified for use in an *NEC*-classified area retain its “guarantee of safety” in a structural fire. In other words, a product designed and certified for even the most hazardous conditions can lose its “ guarantee of safety” after its first exposure to adverse environments commonly found on the fireground. In a sense then, the pursuit of traditional *NEC* IS certifications might not have provided the level of assurance that the fire service in fact thought it did. Because the purpose and scope of this document ~~is primarily~~ is first and foremost rooted in defining a product suitable for use on an active fireground, it cannot be ignored that one of its requirements can be invalidated by the resulting product’s intended use case.

Next, there is the reality that to date in the United States there has been no known instance of a fire service portable thermal imager or RF device ever having caused an explosion — it should be pointed out that many fire service organizations do not use IS-rated portables, so this fact is especially notable. The task group investigated the prior history with multiple organizations, determined that there were only three possible incidents, and upon detailed investigation determined that none of them had anything to do with the portable device.

However, there remain multiple first-responder missions in environments that do resemble ~~the~~ *NEC*-classified hazardous locations. These include incident scenes without a current active fire, such as fuel spills and reported or actual gas leaks. These environments resemble classified hazardous locations in that there is likely a presence of an ignitible atmosphere ~~present~~ ; however, they differ in the following ways from what was envisioned in the *NEC* for explosion protection certifications:

(1) In these areas, there ~~might~~ is likely to be multiple pieces of commercial or industrial equipment not designed to any explosion protection standard and, by their very nature, could be capable or even likely of igniting an atmosphere in normal or intended operation. In contrast, products designed for use in *NEC*-classified environments are designed so as to prevent the chance of combustion under normal operating conditions (i.e., Division 2 classified areas) or for situations where there are multiple fault conditions (i.e., Division 1 classified areas).

(2) Devices used by the firefighter spend much of their product life in relatively benign environments, interrupted by brief excursions into extremely hostile environments where combustion is often taking place. Due to the transient nature of this exposure, there is only a small window of time where the benefit of a product designed for use in an explosive atmosphere is of value. By contrast, products designed for use in *NEC*-classified Division 1 hazardous locations utilizing IS as the type of explosion protection, are intended for continuous use in those environments.

(3) Portable electrical devices used by first responders have multiple items that can either be either disconnected or replaced, such as RSMs, batteries, and interfaces to self-contained breathing apparatus (SCBA) masks. For example, IS-rated portable radios come with instructions not to change the battery in a hazardous environment. However, it

is very possible that the RSM connection could ~~accidently~~ accidentally become disconnected in the hazardous atmosphere. By contrast, fixed electrical installations in hazardous areas are physically interconnected by secured conduit and cable systems to the enclosures. This minimizes the likelihood of any sparks from being created within the area that contains the hazardous material, and also contains any explosions that might occur.

It is recognized that it might be desirable to obtain the level of confidence and safety resulting from the inherent explosion protection design techniques required to gain certification for use in *NEC*-classified Division 1 hazardous locations. However, currently no solution exists that would enable a product to retain its "guarantee of safety" during or after exposure to the extreme environment of an active fire. It is this intent that is captured by the term *certified on delivery*. There is an expectation that both the users and the AHJ will monitor explosion-protected equipment for continued fitness for use, including regular visual inspection for obvious compromise, examination and replacement of aging or damaged batteries, and periodic maintenance as prescribed by the manufacturer.

Therefore, at this time, this minimum standard requires Division 2 NI certification for portable devices. This does not stop vendors and the fire service from pursuing Division 1 IS certified portable devices if they so desire.

Submitter Information Verification

Committee: FAE-ELS

Submittal Date: Wed Feb 21 12:45:47 EST 2024

Committee Statement

Committee Statement: These revisions align this Annex item in NFPA 1930 with the comparable Annex item in NFPA 1970.

Response Message: SR-4-NFPA 1930-2024

Public Comment No. 18-NFPA 1930-2023 [Section No. A.6.7]

Ballot Results

✔ **This item has passed ballot**

35 Eligible Voters
6 Not Returned
25 Affirmative All
4 Affirmative with Comments
0 Negative with Comments
0 Abstention

Not Returned

Cruger, Lorenzo

Herbert, Don

Storti, William

Vaughan, Christopher R.

Warle, Magnus

Worrell, Cody

Affirmative All

Agi, Kamil

Allen, Jason L.

Bahri, Albert J

Berney-Smith, Marcus

Brooks, Joseph Francis

Chavez, Louis

Connolly, James M.

Cook, Jeffrey Curtis

Donnelly, Michelle

Ericson, Dan

Forsyth, William

Gestler, Craig

Grove, Collin

Haase, Wayne C.

Hanna, Benjamin

Hussey, Michael C.

Lentz, Kevin D.

Little, David A.

McCarraher, Gary

McKenna, Michael F.

Quinn, Michael P.

Richardson, Michael T.

Sampl, Christopher M.

Seay, Angelina

Varner, Bruce H.

Affirmative with Comment

Morris, John H.

A

Namm, Joseph

accepted as is

Smith, Clinton

Agree

Turner, Jon

Agreed

Second Revision No. 6-NFPA 1930-2024 [Section No. A.6.7.2.1]

~~**A.6.7.2.1**~~

~~This suitability is demonstrated by being certified as one of the following in accordance with ANSI/UL 121201, *Nonincendive Electrical Equipment for Use in Class I and II, Division 2 and Class III, Divisions 1 and 2 Hazardous (Classified) Locations* :~~

~~Nonincendive equipment, stand-alone type~~

~~Nonincendive equipment, electrically interconnected type~~

~~Nonincendive system~~

Submitter Information Verification

Committee: FAE-ELS

Submittal Date: Wed Feb 21 12:54:51 EST 2024

Committee Statement

Committee Statement: Text added to 6.7.2.1 and 6.7.1, therefore this information was removed from the annex. This revision aligns NFPA 1930 with NFPA 1970.

Response Message: SR-6-NFPA 1930-2024

Public Comment No. 24-NFPA 1930-2023 [Section No. A.6.7.2.1]

Ballot Results

✔ **This item has passed ballot**

35 Eligible Voters
6 Not Returned
25 Affirmative All
4 Affirmative with Comments
0 Negative with Comments
0 Abstention

Not Returned

Cruger, Lorenzo

Herbert, Don

Storti, William

Vaughan, Christopher R.

Warle, Magnus

Worrell, Cody

Affirmative All

Agi, Kamil

Allen, Jason L.

Bahri, Albert J

Berney-Smith, Marcus

Brooks, Joseph Francis

Chavez, Louis

Connolly, James M.

Cook, Jeffrey Curtis

Donnelly, Michelle

Ericson, Dan

Forsyth, William

Gestler, Craig

Grove, Collin

Haase, Wayne C.

Hanna, Benjamin

Hussey, Michael C.

Lentz, Kevin D.

Little, David A.

McCarraher, Gary

McKenna, Michael F.

Quinn, Michael P.

Richardson, Michael T.

Sampl, Christopher M.

Seay, Angelina

Varner, Bruce H.

Affirmative with Comment

Morris, John H.

A

Namm, Joseph

accepted as is

Smith, Clinton

Agree

Turner, Jon

Agreed

Second Revision No. 75-NFPA 1930-2024 [Section No. A.11.14]

A.11.15

Table A.11.15(a) is a summary of the various ergonomic outputs of the RF device or RSM per this standard.

Table A.11.15(a) Ergonomic Outputs of RF Devices or RSMs

Feature	LED	Display	Voice Ann. 6.11.5	Notes
Battery indic, device		Icons, flashes if <25%		
Emergency initiator, RF device	Flashing orange	~~Flashing orange:~~ EMERG SENT	“Sending emergency”	Audible tone at max vol.
Emergency-receiver, RF device	Solid orange	~~Solid orange:~~ ID of initiator	“Receiving emergency”	3-sec. tone max vol; go to max receive volume
IDs during emergency				14 char. alpha-numeric; last 20; 3K entries
Display				8 characters, additional with scrolling; backlit illum. 2 sec.
RF device	Solid grn RX, solid red TX			
RSM	Solid grn RX, solid red TX			
RSM, emergency initiator	Flash orange			
RSM, emergency receiver	Flash orange			
Accessory failure, failsafe protocol	Solid orange	~~Solid orange:~~ FAIL ACCSRY	“Failed accessory”	
Accessory error, error protocol	Flashing yellow	~~Flashing yellow:~~ ACCSY ERR	“Accessory error”	
Out of range	Flashing yellow	~~Flashing yellow:~~ NO SIGNAL	“Out of range”	1-sec. tone every 15 sec. 70% volume
Self-test	Solid red	~~Solid red:~~ TEST FAIL	“Self-check fail”	
Over temperature	Solid orange	~~Solid orange:~~ OVER TEMP	“Over temperature”	At maximum volume
Bluetooth® pairing	Solid blue	~~Solid blue~~		
Cumulative over temperature	Solid orange	~~Solid orange:~~ OVER TEMP	“This device has been exposed to extreme temperatures”	
Nonhazard zone mode Antenna failure	Solid orange	FAIL ANT	“Device in nonhazard zone mode” «Failed antenna »	

Table A.11.15(b) is a summary of the various ergonomic outputs of RF devices or the RSMs per this standard, including those that have AHJ programmable alerts and indications.

The RSM can display event indicators as listed in Table A.11.15(b) for the RF device, if it is capable.

Table A.11.15(b) Ergonomic Outputs of RF Devices or RSMs

Event	Device	LED	Display	Audible	Notes
Battery charge remaining	RF device		Icons as specified in Figure ~~11.1.4.2~~ 11.1.5	~~Alert tone~~ "Battery critical"	~~Recurring every 2~~ At least every ten minutes when less than 25% capacity
Emergency - initiator	RF device, RSM	Flashing orange	Flashing orange:	Alert tone	User ID sent; Audible recurring tone at max volume; subsequent transmissions at highest rated power until cleared
Emergency - receiver	RF device, RSM	Flashing red	Steady orange; ID of Initiator	Alert tone	Audible recurring tone at max volume until cleared
Transmit	RF device, RSM	Steady red			
Receive	RF device, RSM	Steady green			
RSM failure	RF device	Steady orange	Steady orange: "FAIL ACCSRY"	"Failed Accessory"	Maximum volume
Out of range	RF device, RSM	Flashing yellow	Flashing red	Alert tone	1-sec. tone every 15 sec.; 70% volume
Self-test		Solid red		"Self-check fail"	
Over temperature	RF device	Steady orange	Steady orange: "OVER TEMP"	"Over temperature"	At maximum volume
Bluetooth® pairing success	RF device, RSM	Solid blue	Solid blue		
Cumulative over temperature	RF device	Steady orange	Solid orange: "OVER TEMP"	RF device has had long exposure to extreme temperatures	
Cumulative over temperature	RSM	Steady orange		Radio speaker mic has had long exposure to extreme temperatures	
Nonhazard zone mode	RF device			Device in nonhazard zone mode	
Antenna failure	RF device, RSM	Steady orange	FAIL ANT	«Failed antenna»	At maximum volume

Supplemental Information

File Name	Description	Approved
1930_SR_75_A.11.14.docx		

Submitter Information Verification

Committee: FAE-ELS
Submittal Date: Thu Mar 21 09:56:23 EDT 2024

Committee Statement

Committee Statement: Reflect the changes made in 11.1.5 and added antenna failure.
Response Message: SR-75-NFPA 1930-2024

Ballot Results

✔ **This item has passed ballot**

35 Eligible Voters
6 Not Returned
25 Affirmative All
4 Affirmative with Comments
0 Negative with Comments
0 Abstention

Not Returned

Cruger, Lorenzo
Herbert, Don
Storti, William
Vaughan, Christopher R.
Warle, Magnus
Worrell, Cody

Affirmative All

Agi, Kamil
Allen, Jason L.
Bahri, Albert J
Berney-Smith, Marcus
Brooks, Joseph Francis
Chavez, Louis
Connolly, James M.
Cook, Jeffrey Curtis
Donnelly, Michelle
Ericson, Dan
Forsyth, William

Gestler, Craig
Grove, Collin
Haase, Wayne C.
Hanna, Benjamin
Hussey, Michael C.
Lentz, Kevin D.
Little, David A.
McCarraher, Gary
McKenna, Michael F.
Quinn, Michael P.
Richardson, Michael T.
Sampl, Christopher M.
Seay, Angelina
Varner, Bruce H.

Affirmative with Comment

Morris, John H.
A
Namm, Joseph
accepted as is
Smith, Clinton
Agree
Turner, Jon
Agreed

Second Revision No. 21-NFPA 1930-2024 [Section No. A.11.22]

A.11.23

For decades, the explosion protection requirements for RF devices have traditionally been derived from intrinsic safety (IS) requirements, while the explosion protection requirements for thermal imagers have traditionally been derived from nonincendive (NI) requirements. Both of these explosion protections are from *NFPA 70, National Electrical Code (NEC)*. The *NEC* provides requirements for fixed electrical power installations in hazardous (classified) locations such as refineries and grain elevators. The use case for fire service portable devices is different in many ways from fixed electrical installations. In addition, changes were made recently in how testing organizations test certain fire service devices for explosion protection (e.g., RF devices ~~for IS~~). These changes ~~provide~~ provided an opportunity to ~~determine~~ revisit what the exact level of explosion protection is really required for portable devices used in the fire service. The committee has spent a significant amount of time looking at the various issues, reviewing the past history of incidents, and talking to industry experts. ~~In~~ This standard, with regard to explosion protection, ~~this standard~~ reflects that extensive analysis and the resulting decision. The following information is an explanation of some of the many issues and trade-offs that were considered during this process.

First, the term *certified on delivery* warrants explanation. The firefighter faces many varied operating conditions and therefore needs equipment that can span those multiple conditions. Designing for hazardous locations, as classified by the *NEC*, is done with standards that often assume permanent mounting of electrical fixtures within a defined area. None of those areas approaches the environment found within any structure fire. As such, there is no established set of failure mechanisms, practices for design, or means of testing and validation that would make a product certified for use in an *NEC*-classified area retain its “guarantee of safety” in a structural fire. In other words, a product designed and certified for even the most hazardous conditions can lose its “ guarantee of safety” after its first exposure to adverse environments commonly found on the fireground. In a sense then, the pursuit of traditional *NEC* IS certifications might not have provided the level of assurance that the fire service in fact thought it did. Because the purpose and scope of this document ~~is primarily~~ is first and foremost rooted in defining a product suitable for use on an active fireground, it cannot be ignored that one of its requirements can be invalidated by the resulting product’s intended use case.

Next, there is the reality that to date in the United States, there has been no known instance of a fire service portable thermal imager or RF device ever having caused an explosion — it should be pointed out that many fire service organizations do not use IS-rated portables, so this fact is especially notable. The task group investigated the prior history with multiple organizations, determined that there were only three possible incidents, and upon detailed investigation determined that none of them had anything to do with the portable device.

However, there remain multiple first-responder missions in environments that do resemble ~~the~~ *NEC*-classified hazardous locations. These include incident scenes without a current active fire, such as fuel spills and reported or actual gas leaks. These environments resemble classified hazardous locations in that there is likely a presence of an ignitible atmosphere ~~present~~ ; however, they differ in the following ways from what was envisioned in the *NEC* for explosion protection certifications:

(1) In these areas, there ~~might~~ is likely to be multiple pieces of commercial or industrial equipment not designed to any explosion protection standard and, by their very nature, could be capable or even likely of igniting an atmosphere in normal or intended operation. In contrast, products designed for use in *NEC*-classified environments are designed so as to prevent the chance of combustion under normal operating conditions (i.e., Division 2 classified areas) or for situations where there are multiple fault conditions (i.e., Division 1 classified areas).

(2) Devices used by the firefighter spend much of their product life in relatively benign environments, interrupted by brief excursions into extremely hostile environments where combustion is often taking place. Due to the transient nature of this exposure, there is only a small window of time where the benefit of a product designed for use in an explosive atmosphere is of value. By contrast, products designed for use in *NEC*-classified Division 1 hazardous locations utilizing IS as the type of explosion protection, are intended for continuous use in those environments.

(3) Portable electrical devices used by first responders have multiple items that can either be ~~either~~ disconnected or replaced, such as RSMs, batteries, and interfaces to self-contained breathing apparatus (SCBA) masks. For example, IS-rated portable radios come with instructions not to change the battery in a hazardous environment. However, it

is very possible that the RSM connection could ~~accidently~~ accidentally become disconnected in the hazardous atmosphere. By contrast, fixed electrical installations in hazardous areas are physically interconnected by secured conduit and cable systems to the enclosures. This minimizes the likelihood of any sparks from being created within the area that contains the hazardous material, and also contains any explosions that might occur.

It is recognized that it might be desirable to obtain the level of confidence and safety resulting from the inherent explosion protection design techniques required to gain certification for use in *NEC*-classified Division 1 hazardous locations. However, currently no solution exists that would enable a product to retain its "guarantee of safety" during or after exposure to the extreme environment of an active fire. It is this intent that is captured by the term *certified on delivery*. There is an expectation that both the users and the AHJ will monitor explosion-protected equipment for continued fitness for use, including regular visual inspection for obvious compromise, examination and replacement of aging or damaged batteries, and periodic maintenance as prescribed by the manufacturer.

Therefore, at this time, this minimum standard requires Division 2 NI certification for portable devices. This does not stop vendors and the fire service from pursuing Division 1 IS certified portable devices if they so desire.

Submitter Information Verification

Committee: FAE-ELS

Submittal Date: Mon Mar 04 14:03:12 EST 2024

Committee Statement

Committee Statement: These revisions align this Annex item in NFPA 1930 with the comparable Annex item in NFPA 1970.

Response Message: SR-21-NFPA 1930-2024

Public Comment No. 23-NFPA 1930-2023 [Section No. A.11.22]

Ballot Results

✔ **This item has passed ballot**

35 Eligible Voters
6 Not Returned
25 Affirmative All
4 Affirmative with Comments
0 Negative with Comments
0 Abstention

Not Returned

Cruger, Lorenzo

Herbert, Don

Storti, William

Vaughan, Christopher R.

Warle, Magnus

Worrell, Cody

Affirmative All

Agi, Kamil

Allen, Jason L.

Bahri, Albert J

Berney-Smith, Marcus

Brooks, Joseph Francis

Chavez, Louis

Connolly, James M.

Cook, Jeffrey Curtis

Donnelly, Michelle

Ericson, Dan

Forsyth, William

Gestler, Craig

Grove, Collin

Haase, Wayne C.

Hanna, Benjamin

Hussey, Michael C.

Lentz, Kevin D.

Little, David A.

McCarraher, Gary

McKenna, Michael F.

Quinn, Michael P.

Richardson, Michael T.

Sampl, Christopher M.

Seay, Angelina

Varner, Bruce H.

Affirmative with Comment

Morris, John H.

A

Namm, Joseph

accepted as is

Smith, Clinton

Agree

Turner, Jon

Agreed

Second Revision No. 22-NFPA 1930-2024 [Section No. A.11.22.2]

~~**A.11.22.2**~~

~~This suitability is demonstrated by being certified as nonincendive equipment in accordance with ANSI/UL 121201, *Nonincendive Electrical Equipment for Use in Class I and II, Division 2 and Class III, Divisions 1 and 2 Hazardous (Classified) Locations* .~~

Submitter Information Verification

Committee: FAE-ELS
Submittal Date: Mon Mar 04 14:10:25 EST 2024

Committee Statement

Committee Statement: Inclusion of SR 19 allows for the deletion of A.11.22.2. This revision aligns NFPA 1930 with NFPA 1970.
Response Message: SR-22-NFPA 1930-2024

Public Comment No. 26-NFPA 1930-2023 [Section No. A.11.22.2]

Ballot Results

✔ **This item has passed ballot**

35 Eligible Voters
6 Not Returned
25 Affirmative All
4 Affirmative with Comments
0 Negative with Comments
0 Abstention

Not Returned

Cruger, Lorenzo
Herbert, Don
Storti, William
Vaughan, Christopher R.
Warle, Magnus
Worrell, Cody

Affirmative All

Agi, Kamil
Allen, Jason L.

Bahri, Albert J
Berney-Smith, Marcus
Brooks, Joseph Francis
Chavez, Louis
Connolly, James M.
Cook, Jeffrey Curtis
Donnelly, Michelle
Ericson, Dan
Forsyth, William
Gestler, Craig
Grove, Collin
Haase, Wayne C.
Hanna, Benjamin
Hussey, Michael C.
Lentz, Kevin D.
Little, David A.
McCarraher, Gary
McKenna, Michael F.
Quinn, Michael P.
Richardson, Michael T.
Sampl, Christopher M.
Seay, Angelina
Varner, Bruce H.

Affirmative with Comment

Morris, John H.
A
Namm, Joseph
accepted as is
Smith, Clinton
Agree
Turner, Jon
Agreed

NATIONAL FIRE PROTECTION ASSOCIATION
The leading information and knowledge resource on fire, electrical and related hazards

M E M O R A N D U M

TO: Correlating Committee on Fire and Emergency Services Protective Clothing and Equipment

FROM: Yvonne Smith, *Committee Administrator*

DATE: September 27, 2024

SUBJECT: NFPA 1930 Second Draft Correlating Committee FINAL Ballot Results (CustF2024)

According to the final ballot results, all Second Correlating Revisions and the Ballot to Forward NFPA 1930 through the Development Process received the necessary affirmative votes to pass ballot.

Second Correlating Revisions (SCRs):

26 **Members Eligible to Vote**
6 **Members Not Returned** (Barker, Childs, Fargo, Hosea, Johnston, Legendre)

Ballot to Forward NFPA 1930 through the Development Process:

26 **Members Eligible to Vote**
7 **Members Not Returned** (Barker, Childs, Fargo, Hosea, Johnston, Legendre, Mauti)

The attached report shows the number of affirmative, negative, and abstaining votes as well as the explanation of the vote for **each** Second Correlating Revision.

To pass ballot, **each** Second Correlating Revision requires: (1) simple majority of those eligible to vote and (2) an affirmative vote of $^{3}/_{4}$ of ballots returned. See Sections 3.3.4.3.(c) and 4.4.11.5 of the ***Regulations Governing the Development of NFPA Standards***.

Second Correlating Revision No. 1-NFPA 1930-2024 [Global Input]

Revise the following chapter titles, as shown:

4 Thermal Imagers Certification (NFPA 1801)

5 Thermal Imagers Product Labeling and Information (NFPA 1801)

6 Thermal Imagers Design Requirements (NFPA 1801)

7 Thermal Imagers Performance Requirements (NFPA 1801)

8 Thermal Imagers Test Methods (NFPA 1801)

9 Portable RF Voice Communication Devices Certification (NFPA 1802)

10 Portable RF Voice Communication Devices Product Labeling and Information (NFPA 1802)

11 Portable RF Voice Communication Devices Design Requirements (NFPA 1802)

12 Portable RF Voice Communication Devices Performance Requirements (NFPA 1802)

13 Portable RF Voice Communication Devices Test Methods (NFPA 1802)

Submitter Information Verification

Committee: FAE-AAC
Submittal Date: Tue Jul 30 20:15:39 EDT 2024

Committee Statement

Committee Statement: Product descriptors are added to the chapter titles to assist users in navigating the standard.

Ballot Results

✔ **This item has passed ballot**

26 Eligible Voters
6 Not Returned
18 Affirmative All
1 Affirmative with Comments
1 Negative with Comments
0 Abstention

Not Returned

Barker, Roger L.

Childs, Robin B.
Fargo, Cristine Z.
Hosea, Thomas M.
Johnston, Ronald
Legendre, Jeff

Affirmative All

Allen, Jason L.
Arrington, Joseph
Farley, Edmund
Hess, Diane B.
Lehtonen, Karen E.
Matthews, David G.
McKenna, Michael F.
Menard, Douglas
Newsom, Amanda H.
Sanders, Stephen R.
Swan, Rick L.
Szalajda, Jonathan V.
Tekelenburg, Marco
Tutterow, Jr., Robert D.
Van Lent, William A.
Varner, Bruce H.
Weise, Dick
Winer, Harry P.

Affirmative with Comment

Morris, John H.
A

Negative with Comment

Stull, Jeffrey O.
Standard should not advance

Second Correlating Revision No. 11-NFPA 1930-2024 [Detail]

Revise 10.1.7 as follows:

10.1.7

RF subscriber ensembles, RF devices, or RSMs originally certified to the previous edition of NFPA 1802 that have been upgraded to meet ~~the 2025~~this edition of NFPA 1930 shall have the following statement legibly printed or displayed on a display at power up:

UPGRADED TO NFPA 1930 (1802), ~~2025~~[*insert edition year*] ED.

Submitter Information Verification

Committee: FAE-AAC
Submittal Date: Thu Aug 01 12:09:32 EDT 2024

Committee Statement

Committee Statement: The parenthetical document number is added to the label text for consistency with other labeling requirements in this standard. All references to the edition year of the standard are removed from the text to eliminate potential conflicts when the edition year changes by the time the standard is issued.

Ballot Results

✔ **This item has passed ballot**

26 Eligible Voters
6 Not Returned
18 Affirmative All
1 Affirmative with Comments
1 Negative with Comments
0 Abstention

Not Returned

Barker, Roger L.
Childs, Robin B.
Fargo, Cristine Z.
Hosea, Thomas M.
Johnston, Ronald
Legendre, Jeff

Affirmative All

Allen, Jason L.

Arrington, Joseph

Farley, Edmund

Hess, Diane B.

Lehtonen, Karen E.

Matthews, David G.

McKenna, Michael F.

Menard, Douglas

Newsom, Amanda H.

Sanders, Stephen R.

Swan, Rick L.

Szalajda, Jonathan V.

Tekelenburg, Marco

Tutterow, Jr., Robert D.

Van Lent, William A.

Varner, Bruce H.

Weise, Dick

Winer, Harry P.

Affirmative with Comment

Morris, John H.

A

Negative with Comment

Stull, Jeffrey O.

Standard should not advance

Second Correlating Revision No. 3-NFPA 1930-2024 [Sections 4.2.7, 4.2.8, 4.2.9]

4.2.7

The certification organization shall not certify any thermal imager to the 2021 edition of NFPA 1801 on or after the NFPA effective date for ~~the 2025~~ this edition of NFPA 1930 (1801).

4.2.8

The certification organization shall not permit any manufacturer to label any thermal imager as compliant with the 2021 edition of NFPA 1801 that is certified as compliant with ~~the 2025~~ this edition of NFPA 1930 (1801) after the effective date plus 14 months.

4.2.9

The certification organization shall require manufacturers to remove all certification labels and product labels indicating compliance with the 2021 edition of NFPA 1801 from all thermal imagers that are under the ownership and control of the manufacturer on the effective date for this edition of NFPA 1930 (1801) plus 14 months, and the certification organization shall verify that this action is taken.

Submitter Information Verification

Committee: FAE-AAC

Submittal Date: Tue Jul 30 20:20:47 EDT 2024

Committee Statement

Committee Statement: All references to the edition year of the standard are removed from the text to eliminate potential conflicts when the edition year changes by the time the standard is issued.

Ballot Results

✔ **This item has passed ballot**

26 Eligible Voters
6 Not Returned
18 Affirmative All
1 Affirmative with Comments
1 Negative with Comments
0 Abstention

Not Returned

Barker, Roger L.

Childs, Robin B.

Fargo, Cristine Z.

Hosea, Thomas M.

Johnston, Ronald
Legendre, Jeff

Affirmative All

Allen, Jason L.
Arrington, Joseph
Farley, Edmund
Hess, Diane B.
Lehtonen, Karen E.
Matthews, David G.
McKenna, Michael F.
Menard, Douglas
Newsom, Amanda H.
Sanders, Stephen R.
Swan, Rick L.
Szalajda, Jonathan V.
Tekelenburg, Marco
Tutterow, Jr., Robert D.
Van Lent, William A.
Varner, Bruce H.
Weise, Dick
Winer, Harry P.

Affirmative with Comment

Morris, John H.
A

Negative with Comment

Stull, Jeffrey O.
Standard should not advance

Second Correlating Revision No. 4-NFPA 1930-2024 [Sections 5.1.6, 5.1.7]

5.1.6

Thermal imagers originally certified to the previous edition of NFPA 1801 that have been upgraded to meet this edition shall have the following statement legibly printed:

UPGRADED TO NFPA 1930 (1801), ~~2025~~ [*insert edition year*] ED.

5.1.6.1

All letters shall be at least 1.5 mm (1⁄16 in.) in height.

5.1.6.2

The label shall not be restricted to one line.

5.1.6.3

The original NFPA required labeling shall not be removed or covered by the upgrade label.

5.1.7

For both stand-alone and integrated thermal imagers, the following compliance statement shall be legibly printed on the product label:

CERTIFIED MODEL NFPA 1930~~, 2025~~ (1801), [*insert edition year*] ED.

DO NOT REMOVE THIS LABEL!

Submitter Information Verification

Committee: FAE-AAC
Submittal Date: Tue Jul 30 20:24:25 EDT 2024

Committee Statement

Committee Statement: All references to the edition year of the standard are removed from the text to eliminate potential conflicts when the edition year changes by the time the standard is issued. Also, in 5.1.7, the parenthetical document number is added to the label text for consistency with other labeling requirements in this standard.

Ballot Results

✔ **This item has passed ballot**

26 Eligible Voters
6 Not Returned
18 Affirmative All
1 Affirmative with Comments
1 Negative with Comments
0 Abstention

Not Returned

Barker, Roger L.
Childs, Robin B.
Fargo, Cristine Z.
Hosea, Thomas M.
Johnston, Ronald
Legendre, Jeff

Affirmative All

Allen, Jason L.
Arrington, Joseph
Farley, Edmund
Hess, Diane B.
Lehtonen, Karen E.
Matthews, David G.
McKenna, Michael F.
Menard, Douglas
Newsom, Amanda H.
Sanders, Stephen R.
Swan, Rick L.
Szalajda, Jonathan V.
Tekelenburg, Marco
Tutterow, Jr., Robert D.
Van Lent, William A.
Varner, Bruce H.
Weise, Dick
Winer, Harry P.

Affirmative with Comment

Morris, John H.
A

Negative with Comment

Stull, Jeffrey O.
Standard should not advance

Second Correlating Revision No. 7-NFPA 1930-2024 [Section No. 8.10.5.7]

8.10.5.7

The image capturing software and hardware shall permit 16-bit uncompressed color images to be downloaded from the visible spectrum camera to a computer or memory at a rate of one image every 10°C ± 5°C (18°F + ± 9°F), as T_{hot} increases from 50°C to 550°C (122°F to 1022°F).

Submitter Information Verification

Committee: FAE-AAC

Submittal Date: Tue Jul 30 20:41:31 EDT 2024

Committee Statement

Committee Statement: The secondary units value is corrected to use a bilateral tolerance, as permitted for the primary units value.

Ballot Results

✔ **This item has passed ballot**

26 Eligible Voters
6 Not Returned
18 Affirmative All
1 Affirmative with Comments
1 Negative with Comments
0 Abstention

Not Returned

Barker, Roger L.
Childs, Robin B.
Fargo, Cristine Z.
Hosea, Thomas M.
Johnston, Ronald
Legendre, Jeff

Affirmative All

Allen, Jason L.
Arrington, Joseph
Farley, Edmund
Hess, Diane B.

Lehtonen, Karen E.

Matthews, David G.

McKenna, Michael F.

Menard, Douglas

Newsom, Amanda H.

Sanders, Stephen R.

Swan, Rick L.

Szalajda, Jonathan V.

Tekelenburg, Marco

Tutterow, Jr., Robert D.

Van Lent, William A.

Varner, Bruce H.

Weise, Dick

Winer, Harry P.

Affirmative with Comment

Morris, John H.

Suggest rewording for clarity to "The image capturing software and hardware shall download 16-bit uncompressed color images captured at rate of one image every 10°C ± 5°C (18°F +± 9°F), as Thot increases from 50°C to 550°C (122°F to 1022°F) from the visible spectrum camera to a computer or memory."

Negative with Comment

Stull, Jeffrey O.

Standard should not advance

Second Correlating Revision No. 8-NFPA 1930-2024 [Section No. 9.4.16.3]

9.4.16.3

Where an RF device is submitted as an accessory that is built into, attached to, or sold for later attachment to a product, and an NFPA standard exists for the product and the product is certified to that NFPA standard, the RF device shall be certified to NFPA 1930 (1802) .

Submitter Information Verification

Committee: FAE-AAC
Submittal Date: Tue Jul 30 20:46:02 EDT 2024

Committee Statement

Committee Statement: The parenthetical document number is added for consistency with other requirements in this standard.

Ballot Results

✔ **This item has passed ballot**

26 Eligible Voters
6 Not Returned
18 Affirmative All
1 Affirmative with Comments
1 Negative with Comments
0 Abstention

Not Returned

Barker, Roger L.
Childs, Robin B.
Fargo, Cristine Z.
Hosea, Thomas M.
Johnston, Ronald
Legendre, Jeff

Affirmative All

Allen, Jason L.
Arrington, Joseph
Farley, Edmund
Hess, Diane B.

Lehtonen, Karen E.
Matthews, David G.
McKenna, Michael F.
Menard, Douglas
Newsom, Amanda H.
Sanders, Stephen R.
Swan, Rick L.
Szalajda, Jonathan V.
Tekelenburg, Marco
Tutterow, Jr., Robert D.
Van Lent, William A.
Varner, Bruce H.
Weise, Dick
Winer, Harry P.

Affirmative with Comment

Morris, John H.
A

Negative with Comment

Stull, Jeffrey O.
Standard should not advance

Second Correlating Revision No. 10-NFPA 1930-2024 [Section No. 10.1.6]

10.1.6

The following compliance statement shall be legibly printed on the product label:

CERTIFIED MODEL NFPA 1930~~, 2025~~ (1802), [*insert edition year*] ED.

DO NOT REMOVE THIS LABEL!

Submitter Information Verification

Committee: FAE-AAC

Submittal Date: Thu Aug 01 12:06:36 EDT 2024

Committee Statement

Committee Statement: The parenthetical document number is added to the label text for consistency with other labeling requirements in this standard. All references to the edition year of the standard are removed from the text to eliminate potential conflicts when the edition year changes by the time the standard is issued.

Ballot Results

✔ **This item has passed ballot**

26 Eligible Voters
6 Not Returned
18 Affirmative All
1 Affirmative with Comments
1 Negative with Comments
0 Abstention

Not Returned

Barker, Roger L.
Childs, Robin B.
Fargo, Cristine Z.
Hosea, Thomas M.
Johnston, Ronald
Legendre, Jeff

Affirmative All

Allen, Jason L.
Arrington, Joseph

Farley, Edmund
Hess, Diane B.
Lehtonen, Karen E.
Matthews, David G.
McKenna, Michael F.
Menard, Douglas
Newsom, Amanda H.
Sanders, Stephen R.
Swan, Rick L.
Szalajda, Jonathan V.
Tekelenburg, Marco
Tutterow, Jr., Robert D.
Van Lent, William A.
Varner, Bruce H.
Weise, Dick
Winer, Harry P.

Affirmative with Comment

Morris, John H.
A

Negative with Comment

Stull, Jeffrey O.
Standard should not advance

Second Correlating Revision No. 6-NFPA 1930-2024 [Section No. 10.2.5]

10.2.5

The following statement shall appear on the first page of all operating manuals provided as specified in 10.2.3 and 10.2.4:

THIS DEVICE MEETS THE REQUIREMENTS OF NFPA 1930 (1802), ~~2025~~ [*insert edition year*] EDITION.

Submitter Information Verification

Committee: FAE-AAC
Submittal Date: Tue Jul 30 20:39:48 EDT 2024

Committee Statement

Committee Statement: All references to the edition year of the standard are removed from the text to eliminate potential conflicts when the edition year changes by the time the standard is issued.

Ballot Results

✔ **This item has passed ballot**

26 Eligible Voters
6 Not Returned
18 Affirmative All
1 Affirmative with Comments
1 Negative with Comments
0 Abstention

Not Returned

Barker, Roger L.
Childs, Robin B.
Fargo, Cristine Z.
Hosea, Thomas M.
Johnston, Ronald
Legendre, Jeff

Affirmative All

Allen, Jason L.
Arrington, Joseph
Farley, Edmund

Hess, Diane B.
Lehtonen, Karen E.
Matthews, David G.
McKenna, Michael F.
Menard, Douglas
Newsom, Amanda H.
Sanders, Stephen R.
Swan, Rick L.
Szalajda, Jonathan V.
Tekelenburg, Marco
Tutterow, Jr., Robert D.
Van Lent, William A.
Varner, Bruce H.
Weise, Dick
Winer, Harry P.

Affirmative with Comment

Morris, John H.
A

Negative with Comment

Stull, Jeffrey O.
Standard not advance

Second Correlating Revision No. 9-NFPA 1930-2024 [Section No. 10.2.6]

10.2.6

Equipment certified for use in hazardous locations shall be provided with at least the following information in user instructions or training materials:

(1) For RF devices and RSMs that are certified as nonincendive equipment, electrically interconnected types, the following:

(a) Identification as nonincendive equipment, electrically interconnected types

(b) Indication of the ability to interconnect with any other RF device and RSMs also certified and identified as nonincendive equipment, electrically interconnected types, in accordance with this standard

(2) For RF devices that are part of an intrinsically safe system, indication of the RSMs that comprise the intrinsically safe system in accordance with this standard.

Supplemental Information

File Name	Description	Approved
1930_SCR-9_10.2.6.docx		

Submitter Information Verification

Committee: FAE-AAC

Submittal Date: Tue Jul 30 20:57:31 EDT 2024

Committee Statement

Committee Statement: The Correlating Committee accepts the changes proposed by Second Revision 17 (now Correlating Comment 17) but deletes the option for nonincendive systems [proposed as option (2)] to correlate with the options permitted by 11.23.1.

Committee Comment No. 17-NFPA 1930-2024 [New Section after 10.2.5]

Ballot Results

✔ **This item has passed ballot**

26 Eligible Voters
6 Not Returned
18 Affirmative All
1 Affirmative with Comments
1 Negative with Comments
0 Abstention

Not Returned

Barker, Roger L.

Childs, Robin B.
Fargo, Cristine Z.
Hosea, Thomas M.
Johnston, Ronald
Legendre, Jeff

Affirmative All

Allen, Jason L.
Arrington, Joseph
Farley, Edmund
Hess, Diane B.
Lehtonen, Karen E.
Matthews, David G.
McKenna, Michael F.
Menard, Douglas
Newsom, Amanda H.
Sanders, Stephen R.
Swan, Rick L.
Szalajda, Jonathan V.
Tekelenburg, Marco
Tutterow, Jr., Robert D.
Van Lent, William A.
Varner, Bruce H.
Weise, Dick
Winer, Harry P.

Affirmative with Comment

Morris, John H.
A

Negative with Comment

Stull, Jeffrey O.
Standard should not advance

Second Correlating Revision No. 2-NFPA 1930-2024 [Section No. A.1.3]

A.1.3

~~Any AHJs incorporating~~ Beginning with the publication of NFPA 1930, new editions of NFPA 1801, NFPA 1802, NFPA 1932, NFPA 1937, and NFPA 1962~~, or any combination thereof, can replace references to those standards with the applicable chapters in NFPA 1930 and still reference similar content. For example, if an AHJ incorporated the 2018 edition of NFPA 1962 (i.e., in accordance with the 2018 edition of NFPA 1962), and wishes to update to the latest information, the AHJ can do so by incorporating Chapters 1 through 3 , Chapters 22 through 26 , and Annexes A , B , and C , of the of the 2025 edition of NFPA 1930 (i.e., in accordance with Chapters 1 through 3 , Chapters 22 through 26 , and Annexes A , B , and C of the 2025 edition of NFPA 1930).~~ will not be published as separate, standalone standards. Where an authority having jurisdiction wants to update references, the referencing language should refer to NFPA 1930 or the specific chapters of NFPA 1930, as identified in Section 1.3 .

The numbers found in parentheses at the end of each chapter title refer to the former standalone documents and are intended to help users navigate between this standard and the former standalone documents.

Submitter Information Verification

Committee: FAE-AAC
Submittal Date: Tue Jul 30 20:18:55 EDT 2024

Committee Statement

Committee Statement: The boilerplate text is updated to correlate with other consolidated standards.

Ballot Results

✔ **This item has passed ballot**

26 Eligible Voters
6 Not Returned
18 Affirmative All
1 Affirmative with Comments
1 Negative with Comments
0 Abstention

Not Returned

Barker, Roger L.
Childs, Robin B.
Fargo, Cristine Z.
Hosea, Thomas M.
Johnston, Ronald
Legendre, Jeff

Affirmative All

Allen, Jason L.

Arrington, Joseph

Farley, Edmund

Hess, Diane B.

Lehtonen, Karen E.

Matthews, David G.

McKenna, Michael F.

Menard, Douglas

Newsom, Amanda H.

Sanders, Stephen R.

Swan, Rick L.

Szalajda, Jonathan V.

Tekelenburg, Marco

Tutterow, Jr., Robert D.

Van Lent, William A.

Varner, Bruce H.

Weise, Dick

Winer, Harry P.

Affirmative with Comment

Morris, John H.

A

Negative with Comment

Stull, Jeffrey O.

Standard should not advance

1930_CustF2024_FAE_AAC_SD_Forward_BallotFinal

I am in agreement with forwarding NFPA 1930 through the Development Process, which includes the posting of the Second Draft Report and opening of the standard to receive NITMAMS. NOTE: A negative vote will signal your intent to return the whole report to the appropriate Technical Committee(s) for further study.

Eligible to Vote: 26

Not Returned : 7

Roger L. Barker,Cristine Z. Fargo,Thomas M. Hosea,Jeff Legendre,Benjamin Mauti,Robin B. Childs,Ronald Johnston

Vote Selection	Votes	Comments
Affirmative	16	
Affirmative with Comment	2	
Amanda H. Newsom		Agree
John H. Morris		Affirmative to move forward but in disagreement for consolidation of dissimilar products and inclusion of SCAM in product performance standard.
Negative	1	
Jeffrey O. Stull		This standard should not go forward. This is an example of a awful consolidation. The grouping of products in this standard is illogical -- in fact, it is inane. The consolidation provides absolutely no benefits to the end user. According to the chair, one of the standards (NFPA 1982) could benefit from more time and not be burdened by a sloppy consolidation process. What would be logical for NFPA 1901 and 1982 to be combined.
Abstain	0	

NATIONAL FIRE PROTECTION ASSOCIATION
The leading information and knowledge resource on fire, electrical and related hazards

MEMORANDUM

TO: Technical Committee on Fire Department Ground Ladders

FROM: Jenny Depew, *Committee Administrator*

DATE: February 15, 2024

SUBJECT: NFPA 1930 (1932) SD Mtg Determination FINAL Results (CustF2024)

According to the ballot results, the Technical Committee has voted NOT TO SCHEDULE a Second Draft Meeting to consider the development of Second Revisions. The attached report shows the number of affirmative, negative, and abstaining votes received, along with any voting comments.

17 Eligible to Vote
7 Not Returned *(W. Cole, Dandona, Finegan, McCarthy, Morgan, Rosenhan, Speer)*

0 Members Voted to Hold a Second Draft Meeting
10 Members Voted Not to Hold a Second Draft Meeting

The results will be posted to www.nfpa.org/1930next. As always, please feel free to contact me if you have any questions.

Technical Committee on Fire Department Ground Ladders
NFPA 1930 (CustF2024) Second Draft Meeting Determination Ballot FINAL RESULTS

Election:1930_CustF2024_FDG_AAA_DetermineSDmtg_ballot

Per section 4.4.8.4.1 of the Regs., since there were no Public Comments received, a ballot is required to determine if you agree that a Second Draft meeting is unnecessary. Note: A negative vote indicates that a Second Draft meeting is needed to consider the development of Second Revisions to the Proposed 2025 Edition of NFPA 1930 (1932 content).

Eligible to Vote: 17
Not Returned : 7
W. Cole, Dandona, Finegan, McCarthy,
Morgan, Rosenhan, Speer

Vote Selection	Votes	Comments
Affirmative	10	
Affirmative with Comment	0	
Negative	0	
Abstain	0	

For Simple majority, the affirmative votes needed are 9

NATIONAL FIRE PROTECTION ASSOCIATION
The leading information and knowledge resource on fire, electrical and related hazards

M E M O R A N D U M

TO: Technical Committee on Fire Department Rescue Tools

FROM: Yiu Lee, *Committee Administrator*

DATE: March 12, 2024

SUBJECT: NFPA 1930 (1937) No Second Draft Ballot (CustF2024)

The Technical Committee on Fire Department Rescue Tools produced a First Draft Report for the 2025 edition of NFPA 1930, *Standard on Fire and Emergency Service Use of Thermal Imagers, Two-Way Portable RF Voice Communication Devices, Ground Ladders, and Fire Hose, and Fire House Appliances*, and sought Public Comments. No Public Comments were submitted on this First Draft Report however the Technical Committee did hold a Second Draft meeting on March 7, 2024, but did not create any Second Revisions.

As a result, there will be no Second Draft ballot for the Technical Committee on Fire Department Rescue Tools.

The NFPA appreciates the Technical Committee's time and effort in revising NFPA 1930 for the 2025 edition.

If you have questions, please do not hesitate to contact me at ylee@nfpa.org.

NATIONAL FIRE PROTECTION ASSOCIATION
The leading information and knowledge resource on fire, electrical and related hazards

MEMORANDUM

TO: Technical Committee on Fire Hose

FROM: Yiu Lee, *Committee Administrator*

DATE: February 15, 2024

SUBJECT: NFPA 1930 (1962) SD Meeting Determination Final Results (CustF2024)

According to the ballot results, the Technical Committee has voted NOT TO SCHEDULE a Second Draft Meeting to consider the development of Second Revisions. The attached report shows the number of affirmative, negative, and abstaining votes received, along with any voting comments.

30 **Eligible to Vote**
10 **Not Returned** (Aubuchon, Sr., Bryant, Budzinski, Grove, Kozey, Lighthill, Mathews, Vanderlip, Walsh, Wu)

0 **Members Voted to Hold a Second Draft Meeting**
20 **Members Voted Not to Hold a Second Draft Meeting**

The final results have also been posted to www.nfpa.org/1930next. As always, please feel free to contact me if you have any questions.

Technical Committee on Fire Hose
NFPA 1930 CustF2024 Second Draft Determination Ballot FINAL RESULTS

Per section 4.4.8.4.1 of the Regs., since there were no Public Comments received a ballot is required to determine if you agree a Second Draft meeting is unnecessary. Note: A negative vote indicates that a Second Draft meeting is needed to consider the development of Second Revisions to the 2025 edition of NFPA 1930 (1962 content).

Eligible to Vote: 30
Not Returned : 10

Michael S. Aubuchon, Sr,
Gregory Kozey,
Toby Mathews,
Tim Vanderlip,
Samuel Wu,
David Walsh,
Christopher B. Budzinski,
Scott M. Bryant,
Mark Allen Lighthill,
Ethan Grove

Vote Selection	Votes	Comments
Affirmative	20	
Affirmative with Comment	0	
Negative	0	
Abstain	0	

Total Voted : 20

For Simple majority, the affirmative votes needed are 16